Hitachi, Ltd.
Tokyo Japan

HITACHI 9-TRANSISTOR PORTABLE RADIO MODEL WH-900

SERVICE MANUAL

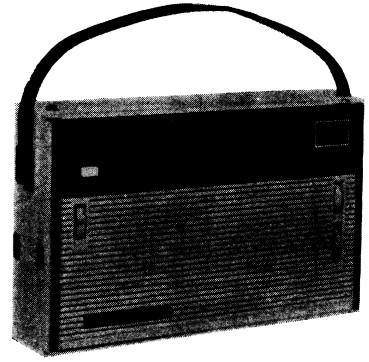

SPECIFICATIONS

CIRCUIT SYSTEM ...Superheterodyne, 9 transistor
TUNING RANGE.....Medium wave (520~1,620 kc)
Shortwave (SW_1) (1.6~4.5 Mc)
(SW_2) (3.8~12 Mc)
(SW_3) (12~27 Mc)
INTERMEDIATE FREQUENCY.....455 kc
TRANSISTOR COMPONENT
2 SA 350.....Frequency Mixer
2 SA 350.....Local Oscillator
2 SA 12 .....I. F. Amp.
2 SA 353..... .....I. F. Amp.
2 SB 77 .....DC Amp. for radar tuning
2 SB 155.....1st A. F. Amp.
2 SB 77 .....2nd A. F. Amp.
2 SB 156×2 .....Class B Push-pull Power Amp.

GERMANIUM DIODE
1 N 34 A×2 .....Detector & A.G.C.
VARISTOR
HV 16.....Temperature and Voltage Compensator
SPEAKER .....4″×6″, oval
POWER OUTPUT.....800 mW (maximum),
500 mw (Undistorted)
POWER SOURCE.....6 V (four, Hitachi UM-1A or equivalent)
ANTENNA .....Ferrite-core antenna & telescopic rod antenna, both built-in
EARPHONE .....Hitachi magnetic earphone EL-216
CABINET DIMENSIONS
6 1/16″ (171 mm) High, 10 1/4″ (274 mm) Wide, 2 7/8″ (73 mm) Deep
WEIGHT .....Approx. 5.1 lbs. (2 kg) including batteries

DESCRIPTION

Model WH-900 is a high sensitive radio using 9 transistors, a varistor and two germanium diodes.

A super heterodyne circuit is used consisting of: a frequency mixer, a local oscillator, 2 stage I.F. amplifiers, a DC amplifier, 2 stage A.F. amplifiers and Class-B Push-pull Power amplifier.

With this radio, listening to the medium wave (520~1,620 kc), the short wave ((SW_1) 2.8~12 Mc, (SW_2) 3.8~12 Mc, (SW_3) 12~27 Mc) broadcasts is possible.

A newly-designed radar tuning device is provided to find the desired station easily with a flash.

A built-in large-sized ferrite core antenna and Hitachi "Drift" type transistors provide high sensitive reception without noise.

Two stage A.F. amplifiers, a Class-B Push-pull Power amplifier and a Hitachi dynamic oval speaker are used to obtain rich volume and fine tone.

Band selector is easily done by pushbutton system.

NAME OF THE PARTS

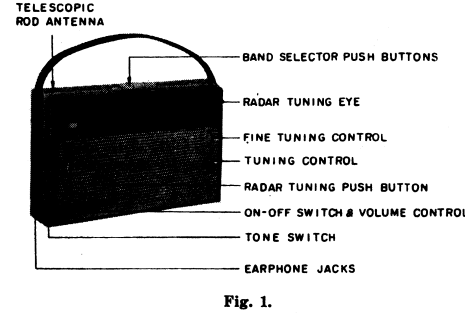

Fig. 1.

HOW TO LOOP DIAL CORD

After taking out the chassis, set the dial pointer at the low frequency end. And referring to Fig. 3.

1. Tie the one end of the dial cord to the POSITION ① of SPRING.
2. Pass the cord through DIAL POINTER, PULLEY ② and PULLEY ③.
3. Wind the cord 2½ turn around the TUNING CONTROL SHAFT.
4. Pass the cord along PULLEY ④ and fix the other end of the cord at the position ⑤ with a knot-fixing clamp.
5. Apply silicon grease to the dial pointer sliding way, and set the dial pointer at the high frequency end and fix the dial pointer with white lacquer.

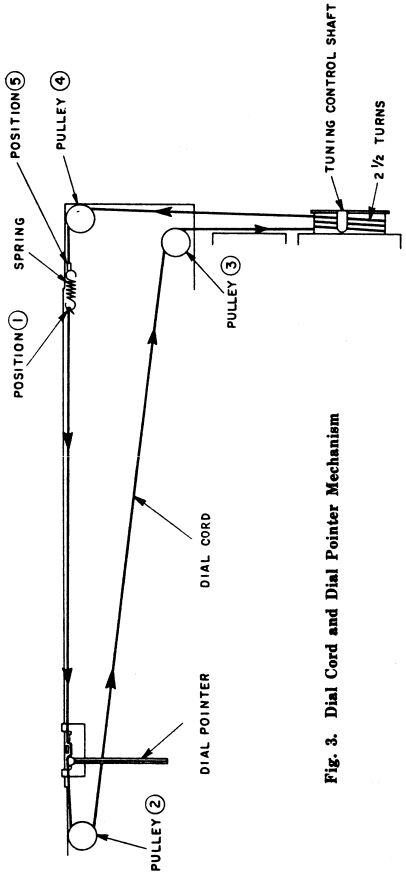

Fig. 3. Dial Cord and Dial Pointer Mechanism

H22 HITACHI WH-900 H22

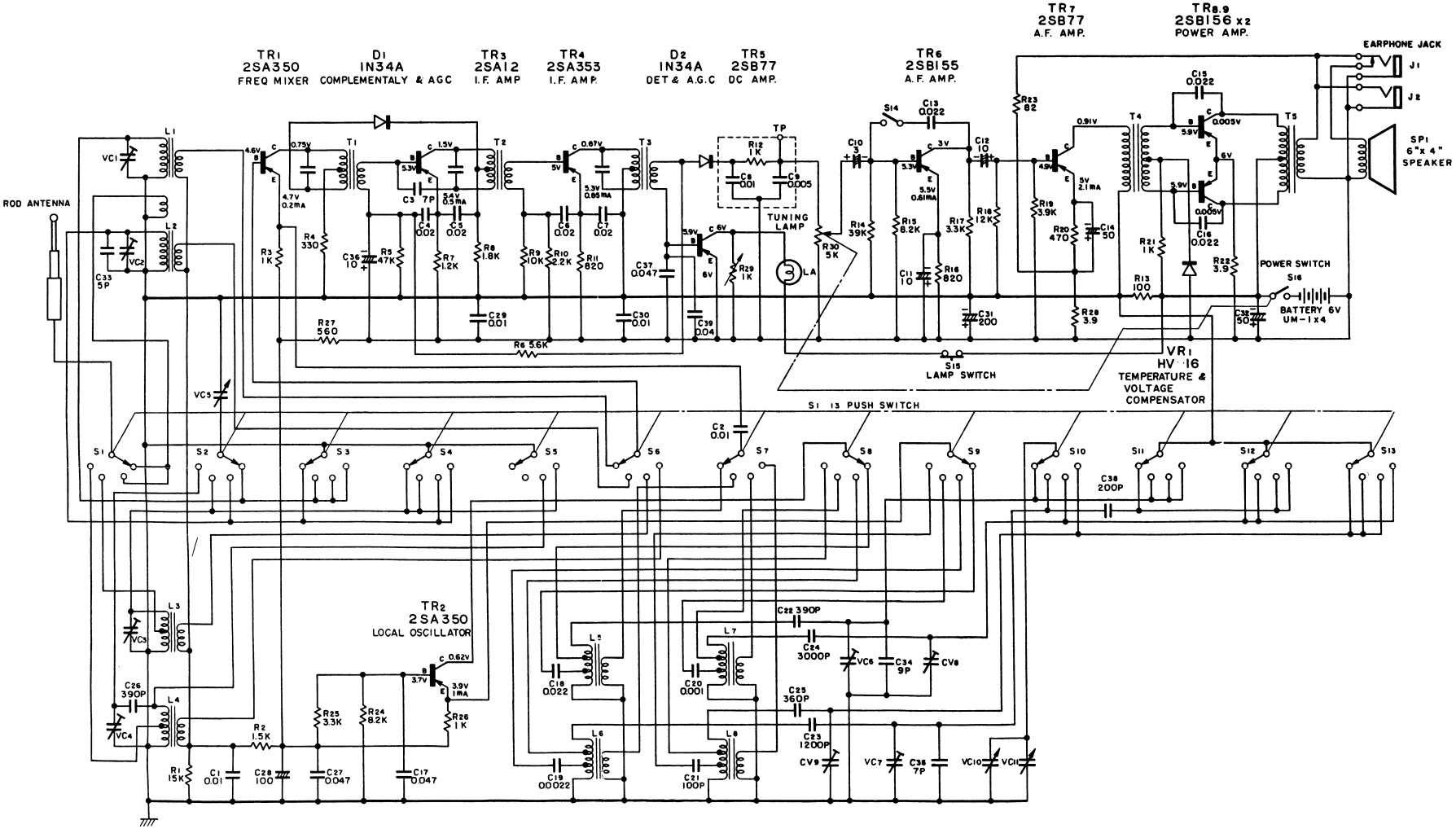

NOTES: 1. Units of Ω and μF are omitted.

2. Direct current resistance of driver transformer (T_4).....PR 1. 68Ω, SEC. 88Ω.

Direct current reeistance of output transformer (T_5) .....PR 1. 3.3Ω, SEC. 0.4Ω.

ERRATA: 1.

Change	into
CV8	VC8
CV9	VC9

HITACHI WH-900

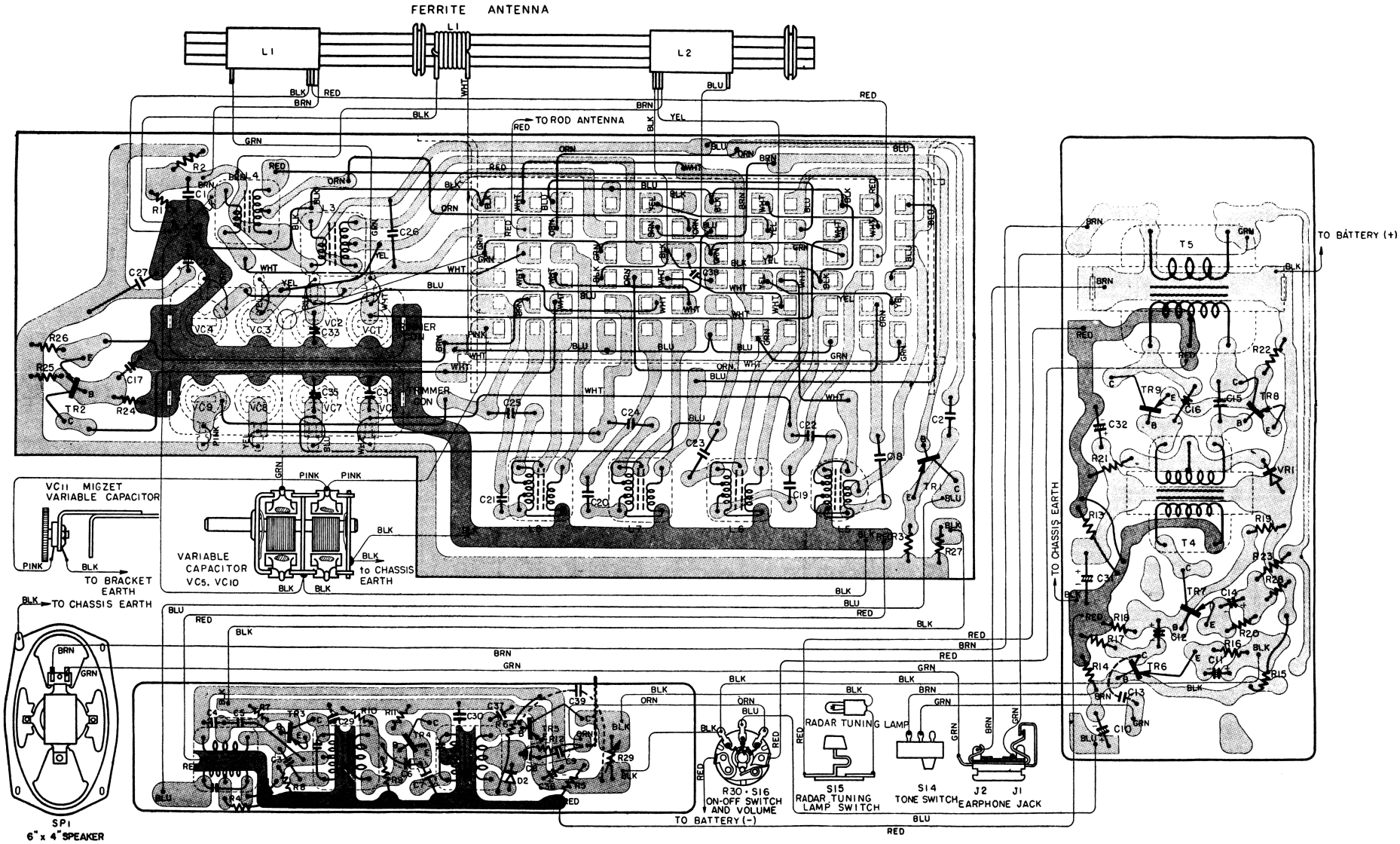

ALIGNMENT PROCEDURE

(1) Use batteries having the specified voltage. Voltage, when the switch is turned on (with no signal) must not be less than 5.5 V.

(2) Turn the volume control maximum, and the fine tuning control to its medium. And move the tone chang-over switch to "L", and make 400 c/s or 1000 c/s modulation to signal generator, and

(i) in case except SW_2, SW_3, connect the output of signal generator to a loop antenna (4 inch in diameter, wound two or three rounds) and connect the loop antenna to the ferrite-core antenna,

(ii) in case of SW_2, SW_3, connect the signal generator's output to such a dummy antenna as the Eig. 4 and connect the signal generator's earth terminal to the receiver chassis.

(3) Connect the vacuum-tube voltmeter (with an AC 3V or less scale) to the earphone jack terminated the dummy loard 8Ω. Make adjustments of the following tables to gain maximum on voltmeter.

(4) Adjust the signal generator's output so that the reading of voltmeter may not exceed 0.63 V.

(5) When adjustment is over, fix the antenna coils by waxing and the adjusted cores with white lacquer.

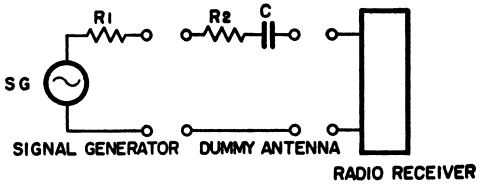

R1 + R2 = 400Ω
C = 8PF

Fig. 4

I. F. Circuit Alignment

Step	Set Band-Selector to-	Sig. Gen. Output	Dial pointer setting	Adjust-for Max. Output
①	MW	455 kc	Quiet point at high frequency end	T_3
②				T_2
③				T_1
④	Repeat sreps ①, ② and ③.			

R. F. Circuit Alignment

Step	Set Band-Selecror to-	Sig. Gen. Output	Dial pointer setting	Adjust-for Max. Output
⑤	MW	500 kc	Quiet point at low frequency end	L_5
⑥		1,670 kc	Quiet point at high frequency end	CV_6
⑦		Repeat steps ⑤ and ⑥.		
⑧		600 kc	600 kc signal	L_1
⑨		1,400 kc	1,400 kc signal	CV_1
⑩		Repeat steps ⑧ and ⑨.		
⑪	SW_1	1.55 Mc	Quiet point at low frequency end	L_6
⑫		4.70 Mc	Quiet point at high frequency end	CV_7
⑬		Repeat steps ⑪ and ⑫.		
⑭		1.70 Mc	1.70 Mc signal	L_2
⑮		4.20 Mc	4.20 Mc signal	CV_2
⑯		Repeat steps ⑭ and ⑮.		
⑰	SW_2	3.70 Mc	Quiet point at low frequency end	L_7
⑱		12.5 Mc	Quiet point at high frequency end	CV_8
⑲		Repeat steps ⑰ and ⑱.		
⑳		4.0 Mc	4.0 Mc signal	L_3
㉑		11.0 Mc	11.0 Mc signal	CV_3
㉒		Repeat steps ⑳ and ㉑.		
㉓	SW_3	11.5 Mc	Quiet point at low frequency end	L_8
㉔		28.0 Mc	Quiet point at high frequency end	CV_9
㉕		Repeat steps ㉓ and ㉔.		
㉖		12.0 Mc	12.0 Mc signal	L_4
㉗		28.0 Mc	28.0 Mc signal	CV_4
㉘		Repeat steps ㉖ and ㉗.		

HITACHI WH-900