Hitachi, Ltd.
Tokyo Japan

CIRCUIT SYSTEM .....10 transistor superheterodyne
TUNING RANGE .....BC (535~1,605 kc) SW_1 (3.8~10 Mc)
SW_2 (10~18 Mc)
TRANSISTOR COMPONENT
2SA 130 .....R. F. Amp.
2SA 131 .....Local Oscillator
2SB 132 .....Frequency Mixer
2SA 12×2 .....I. F. Amp.
2SA 12 .....Detector & AGC
2SB 155 .....A. F. Amp.
2SB 77 .....A. F. Amp.
2SB 156×2 .....Class-B Push-pull power Amp.
GERMANIUM DIODE

IN 34 A .....Complementary A. G. C.
VARISTOR
HV-16 .....Temperature and Voltage Compensator
POWER OUTPUT ....150mW (undistorted), 200mW (Maximum)
LOUDSPEAKER .....3″ P. M.
ANTENNA .....A ferrite-core antenna, Telescopic rod antenna both built-in, External antenna jack attached.
POWER SOURCE ....4.5 volts (Three Hitachi UM-2A or epuivalent)
DIMENSIONS .....4¾″ (120mm) High, 8 1/16″ (204mm) Wide, 1⅞″ (47mm) Deep.
WEIGHT .....2.65 lbs. (1.2 kg) including batteries.

HOW TO LOOP DIAL CORD

After taking out the chassis, set the dial pointer at the low frequency end. And referring to Fig. 2,

1. fix the dial cord at the POSITION ① of spring with a knot-fixing clamp and pass it along the PULLEY ②, DIAL POINTER ③ and wind it 2 turns around TUNING CONTROL SHAFT ④.
2. then, after the cord is wound 1 turn around the dial drum, pass through the HOLE ⑤ and pass it along PULLEY ⑥, ⑦ and fix the cord at the POSITION ⑧ with a knot-fixing clamp.

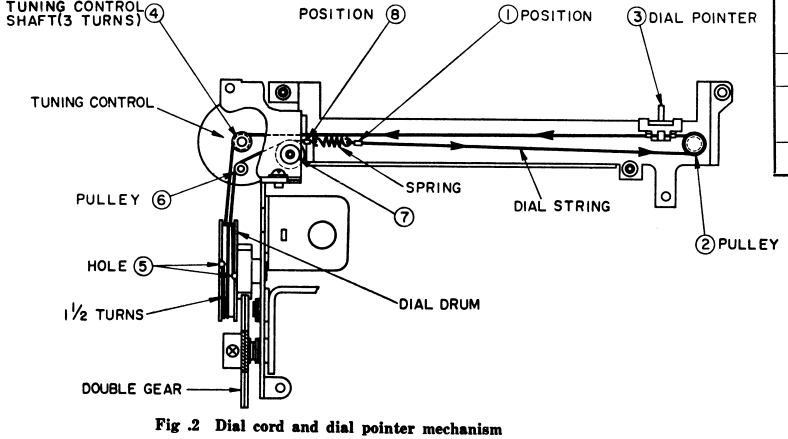

Fig .2 Dial cord and dial pointer mechanism

ALIGNMENT PROCEDURE

(1) Use batteries having the specified voltage. Voltage, when the switch is turned on (with no signal) must not be less than 4.3 V.

(2) Turn the volume control maximum. and the fine tuning control to its medium. And make 400 c/s ± 30% modulation to signal generator, and

(I) in case except SW_2, connect the output of signal generator to a loop antenna (4 inch in diameter, wound two or three rounds) and connect the loop antenna to the ferrite-core antenna,

(II) in case of SW_2, connect the signal generator's output to such dummy antenna as the following figure, and connect the signal generator's earth terminal to the receiver chassis.

(3) Connect the vacuum-tube voltmeter (with an AC 3 V or less scale) to the earphone jack, Make adjustments of the following tables to gain maximum on voltmeter.

(4) Adjust the signal generator's output so that the reading of voltmeter may not exceed 0.5 V.

(5) When adjustment is over, fix the antenna coils by waxing and the adjusted cores white lacquer,

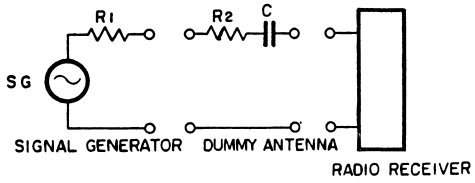

$R1 + R2 = 400\Omega$
$C = 8PF$

I. F. Circuit Alignment

Step	Turn Band-Selector to-	Sig. Gen. Output	Dial Pointer Setting	Adjust for Max. Output
①	MW	455 kc (400 c/s)	Quiet point at high frequency end	T_3
②				T_2
③				T_1
④		Repeat steps ①, ② and ③		

R. F. Circuit Alignment

Step	Turn Band- to-Selector	Sig. Gen. Output	Dial Pointer Setting	Adjust for Max. Output
⑤	MW	520 kc	Quiet point at low frequency end	L_4
⑥		1,650 kc	Quiet point at high frequency end	C_{2D}
⑦		Repeat steps ⑤ and ⑥		
⑧		600 kc	600 kc signal	L_1, L_7
⑨		1,400 kc	1,400 kc signal	C_{2A}, C_{2F}
⑩		Repeat steps ⑧ and ⑨		
⑪	SW_1	3.7 Mc	Quiet point at low frequency end	L_5
⑫		4.0 Mc	4.0 Mc Signal	L_2, L_8
⑬		Repeat steps ⑪ and ⑫		
⑭		10.5 Mc	10.5 Mc signal	C_{2E}
⑮		10.5 Mc	10.5 Mc signal	C_{2B}, C_{2G}
⑯		Repeat steps ⑭ and ⑮		
⑰	SW_2	9.5 Mc	Quiet point at low frequency end	L_6
⑱		within the range of 20 ±1 Mc	Highest frequency end	L_2, L_8
⑲		Repeat steps ⑰ and ⑱		
⑳		11.0 Mc	11.0 Mc signal	L_3, L_9
㉑		20±1 Mc	20±1 Mc signal	C_{2C}, C_{2H}
㉒		Repeat steps ⑳ and ㉑		

10-TRANSISTOR RADIO

MODEL WH-1017

HITACHI WH-1017

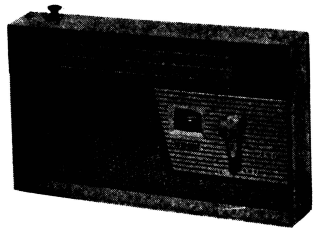

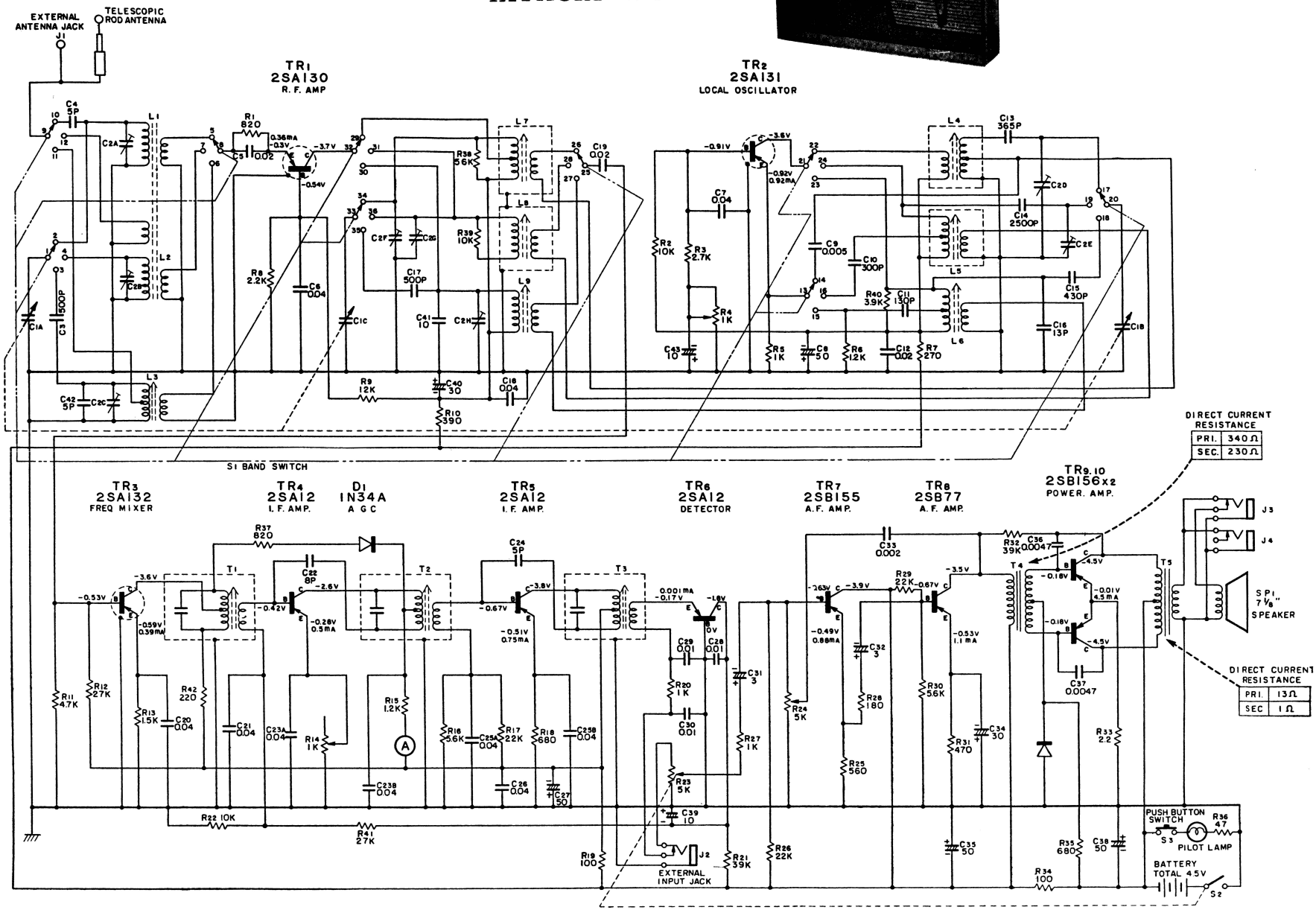

NOTE: Resistance unit is Ω, unit of capacity is μF.

HITACHI WH 1017

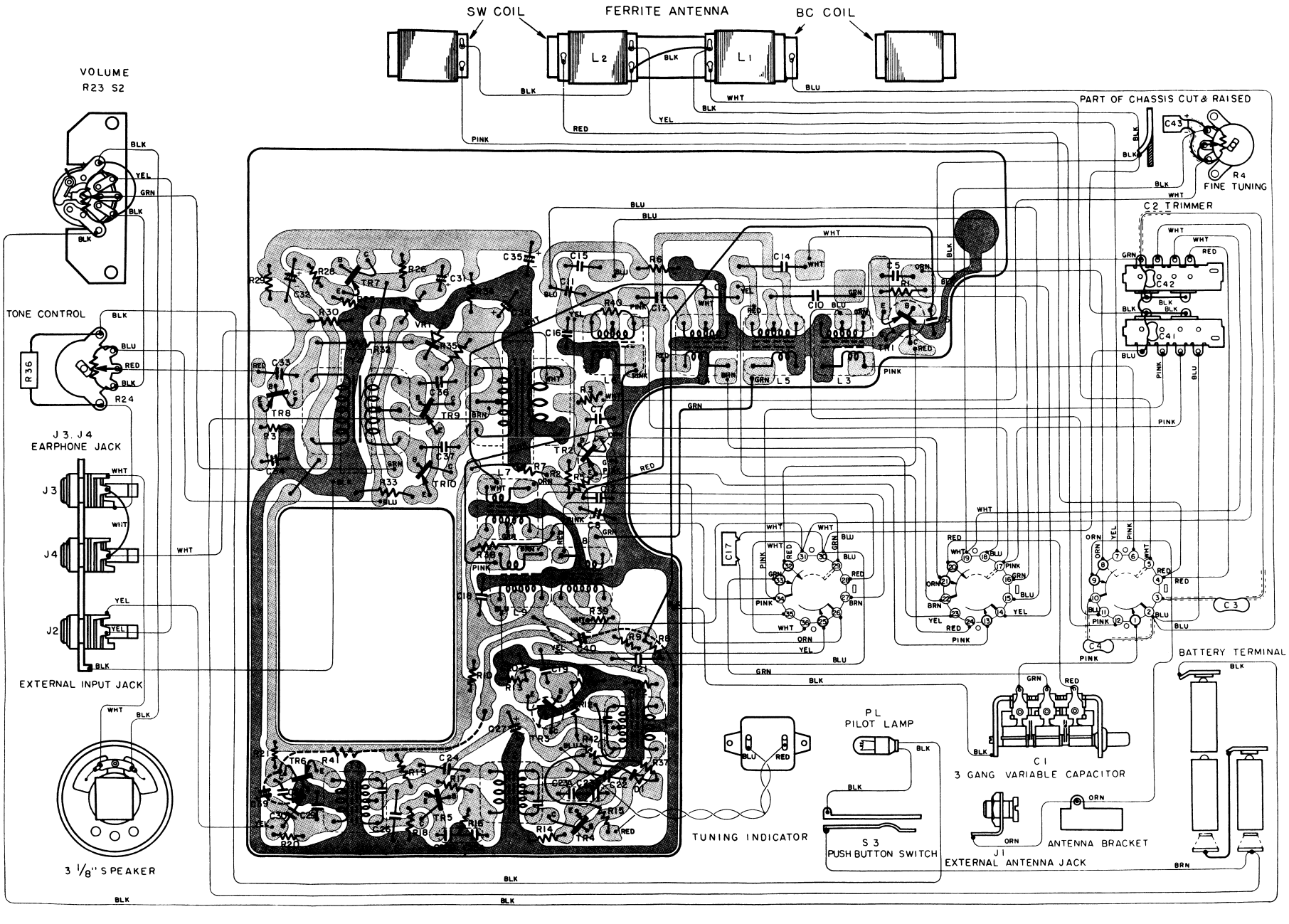
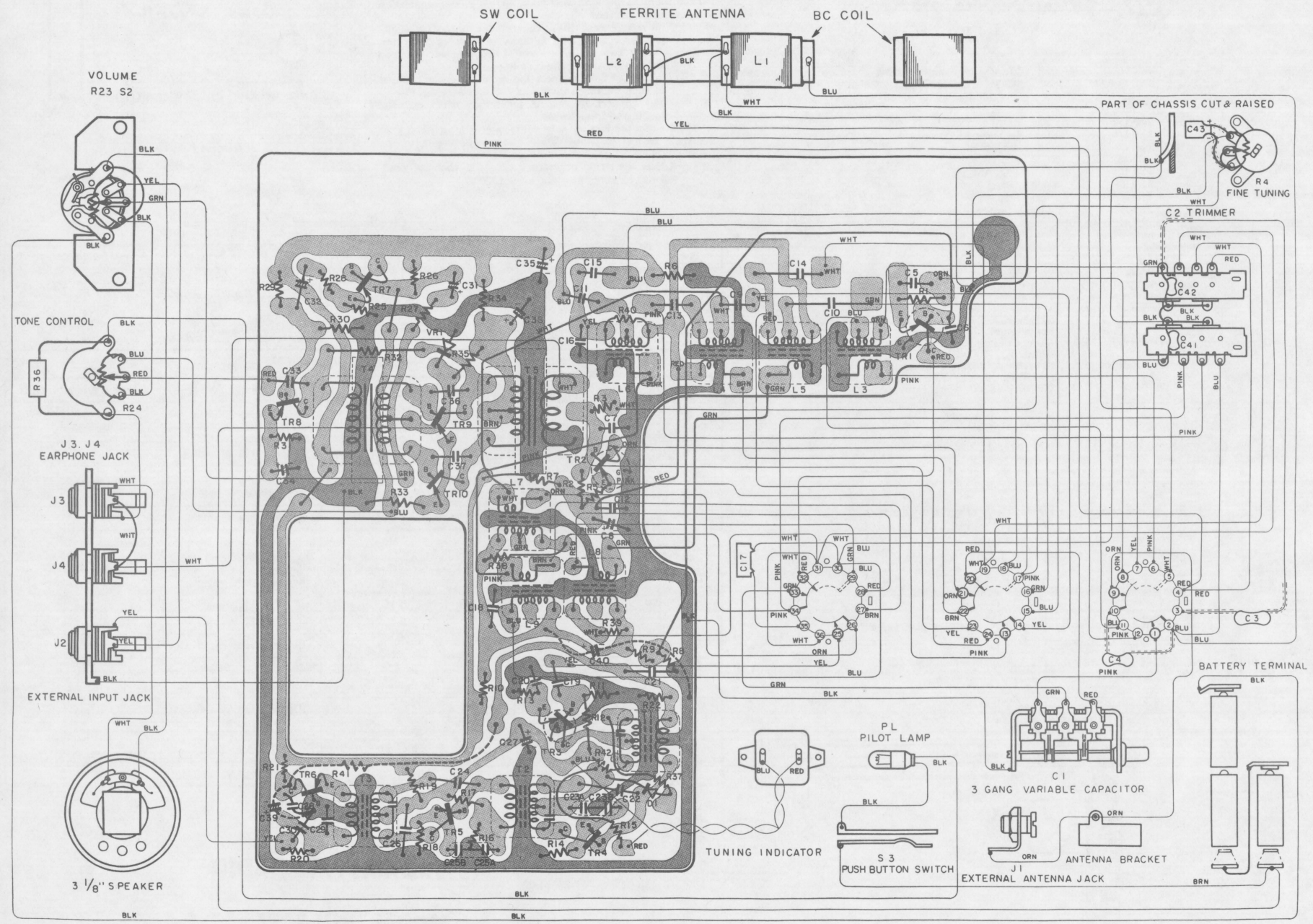
HITACHI WH 1017