WESTINGHOUSE SERVICE MANUAL FOR MODEL W738P

WESTINGHOUSE
Factory Supervised
Service

RADIO

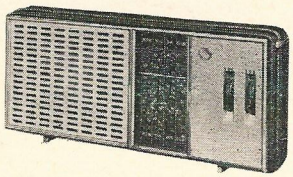

This model is a seven transistor, battery operated superheterodyne portable receiver designed for the reception of the Medium Wave Broadcasting Band.

ISSUED BY

EMAIL LIMITED
CONSUMER PRODUCTS DIVISION (SYDNEY)
Joynton Avenue, Waterloo. 69-0411

ELECTRICAL AND MECHANICAL SPECIFICATIONS

Frequency Range ..... 520-1,620 Kc/s

Intermediate Frequency ..... 455 Kc/s

Battery Complement .....
(6v) 4 Eveready type 1050 Batteries

Battery Consumption:
For Zero audio output ..... 17 mA
For 50 mW audio output ..... 50 mA
For full audio output ..... 155 mA

Loudspeaker: 5″ x 3″ 50070

V.C. Impedance 56 ohms (centre tapped) at 400 c.p.s.

Undistorted Power Output ..... 330 mW

Controls:
On/Off Volume—front left-hand.
Tuning—front right-hand.

Transistor and Diode Complement:
AWV 2N1639 ..... Converter
AWV 2N1638 ..... 1st I.F. Amplifier
AWV 2N1638 ..... 2nd I.F. Amplifier
AWV 2N408 ..... Audio Amplifier
AWV 2N408 ..... Driver
AWV AS128 ..... Output
AWV AS128 ..... Output
AWV AS22 ..... Compensating Diode
AWV IN87A ..... Overload Diode
AWV IN87A ..... Detector

Dimensions:
Height ..... $4\frac{3}{4}$″
Width ..... $10\frac{1}{2}$″
Depth ..... $2\frac{1}{4}$″
Weight (with batteries) ..... 3lb. 4oz.

CHASSIS REMOVAL

Remove two screws holding the back to the cabinet body and remove the back.

Remove the batteries.

Remove two screws holding the battery holder to the cabinet front and lift the holder from the cabinet.

Referring to Fig. 1 remove four screws (marked "A") and one hexagon spacer (marked "B").

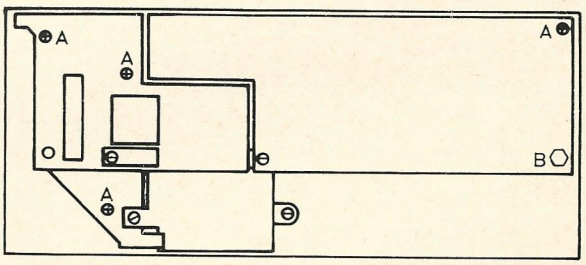

R.1110

fig. 1

Lift the chassis and printed board assembly as far from the cabinet as possible and tilt it back.

Remove the dial backing plate by unscrewing the two retaining screws.

The wiring side of the printed board is now exposed for service checks.

Re-assembly is the reverse of the above.

Dec. '65

WESTINGHOUSE SERVICE MANUAL FOR MODEL W738P

Drive Cord Replacement:

Fig. 2 shows the route of the cord and the method of attachment.

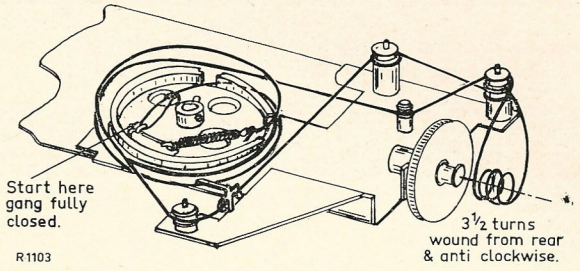

fig. 2

ALIGNMENT PROCEDURE

Manufacturer's Setting of Adjustments:

The receiver is tested by the manufacturer with precision instruments and all adjusting screws are sealed. Re-alignment should be necessary only when components in tuned circuits are repaired or replaced or when it is found that the seals over the adjusting screws have been broken. It is especially important that the adjustments should not be altered unless the correct testing instruments, listed below, are used.

Under no circumstances should the plates of the ganged tuning capacitor be bent, as the unit is accurately aligned during manufacture and can only be re-adjusted by skilled operators using special equipment.

For all alignment operations, keep the generator output as low as possible to avoid a.g.c. action and set the volume control in the maximum clockwise position.

Testing Instruments:

Signal Generator—modulated 400 c.p.s., or
Modulated Oscillator.

If the modulated oscillator is used, connect a 0.22 megohms non-inductive resistor across the output terminals.

Output measurements must be made with either the speaker connected or with two 28 ohms resistors connected in series across the output collectors when the speaker is removed. If an indication only is required, Output Meter type 2M8833, switched to 5000 ohms and connected across the collectors, should be adequate. For a true reading of power output, an a.c. meter, with neither probe earthed, connected similarly will measure 1.2 volts for 50 mW (the effective load being 28 ohms).

I.F. Alignment Tool Part No. 39462.

ALIGNMENT TABLE

ORDER	CONNECT "HIGH" SIDE OF GENERATOR TO:	TUNE GENERATOR TO:	TUNE RECEIVER TO:	ADJUST FOR MAX. PEAK OUTPUT
1	Aerial section of Gang	455 Kc/s	Gang fully closed	Cores in TR5‡, TR4 and TR3
Repeat adjustment until maximum output is obtained.				
2	Inductively Coupled to Rod Aerial*	600 Kc/s	600 Kc/s	Osc. Core (TR2) †
3	Inductively Coupled to Rod Aerial*	1,620 Kc/s	Gang fully open	Osc. Trimmer (C5)
4	Inductively Coupled to Rod Aerial*	1,500 Kc/s	1,500 Kc/s	Aer. Trimmer (C4)
Repeat steps 2, 3 and 4				

‡ Peak TR5 with core toward the board.
* A coil comprising three turns of 16 gauge D.C.C. wire about 12 inches in diameter should be connected between the output terminals of the test instrument, placed concentric with the rod aerial and distant not less than one foot from it.

† Rock the tuning control back and forth through the signal.

D.C. RESISTANCE OF WINDINGS

Winding	D.C. Resistance in ohms
Ferrite Rod Assembly TR1:	
Primary 5-6	*
Secondary 1-2	1.5
Tertiary 3-4	*
Oscillator Transformer TR2:	
Primary	1
Secondary	4.7
1st I.F. Transformer TR3:	
Primary	3
Secondary	*
2nd I.F. Transformer TR4:	
Primary	3
Secondary	*
3rd I.F. Transformer TR5:	
Primary	3
Secondary	*
Driver Transformer TR6	
Primary	50
Secondary (each half)	25

* Less than 1 ohm.

The above readings were taken on a standard chassis, but substitution of materials during manufacture may cause variations and it should not be assumed that a component is faulty if a slightly different reading is obtained.

MECHANICAL REPLACEMENT PARTS

Item	Part No.
Cabinet, Back	66440
Cabinet Body	60274
Cabinet, Front	66664/1
Cover, Dial	66447
Dial Scale	65026A
Door, Battery compartment	66442
Drum, Drive	64700
Earphone	307003
Earphone Clip	61558
Fret, Cloth	66438
Fret, Moulded	66437
Gang Mounting:	
Gang	66351
Grommet (3)	63199
Screw, 6BA x 9/32" Ch. Hd. (3)	716009
Spacers (3)	39110
Washers, 6BA Flat (3)	15722
Washer, 6BA ITL	921206
Holder, Battery	66449
Knob, Tuning	66468
Knob, Volume	66464
Plate, Contact, Negative	66473
Plate, Contact, Positive	66475
Pointer, Tuning	66476
Pulley, Large (2)	66626
Pulley, Small	17716
Spindle, Drive	66469
Spring, Battery Contact	44188
Spring, Drive Cord	1741
Support, Ferrite Rod (2)	66470

NOTE: When ordering spares, always quote the above Part Numbers, and in the case of coloured parts such as knobs, etc., also quote colour.

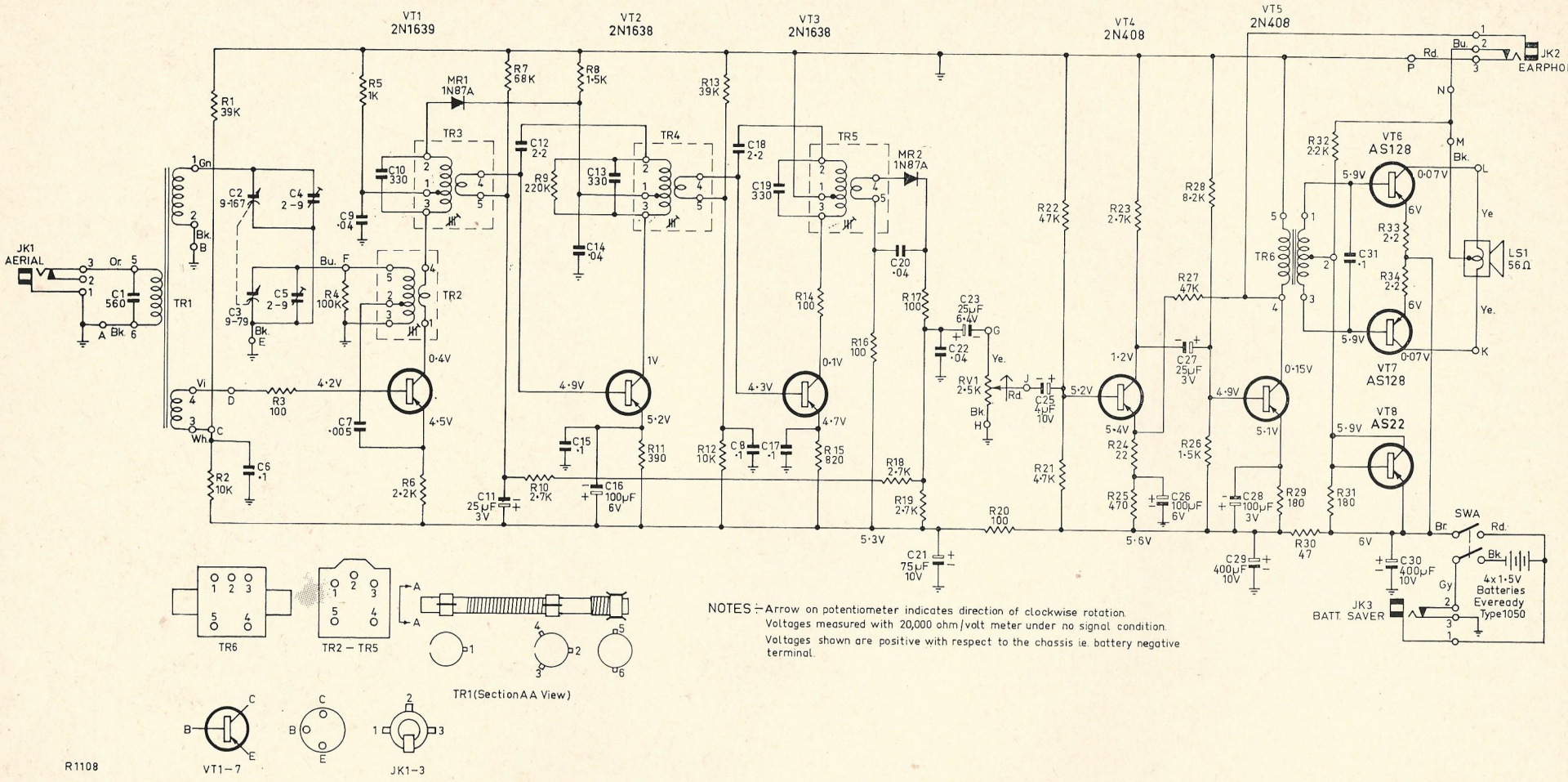

NOTES :- Arrow on potentiometer indicates direction of clockwise rotation.
Voltages measured with 20,000 ohm/volt meter under no signal condition.
Voltages shown are positive with respect to the chassis i.e. battery negative terminal.

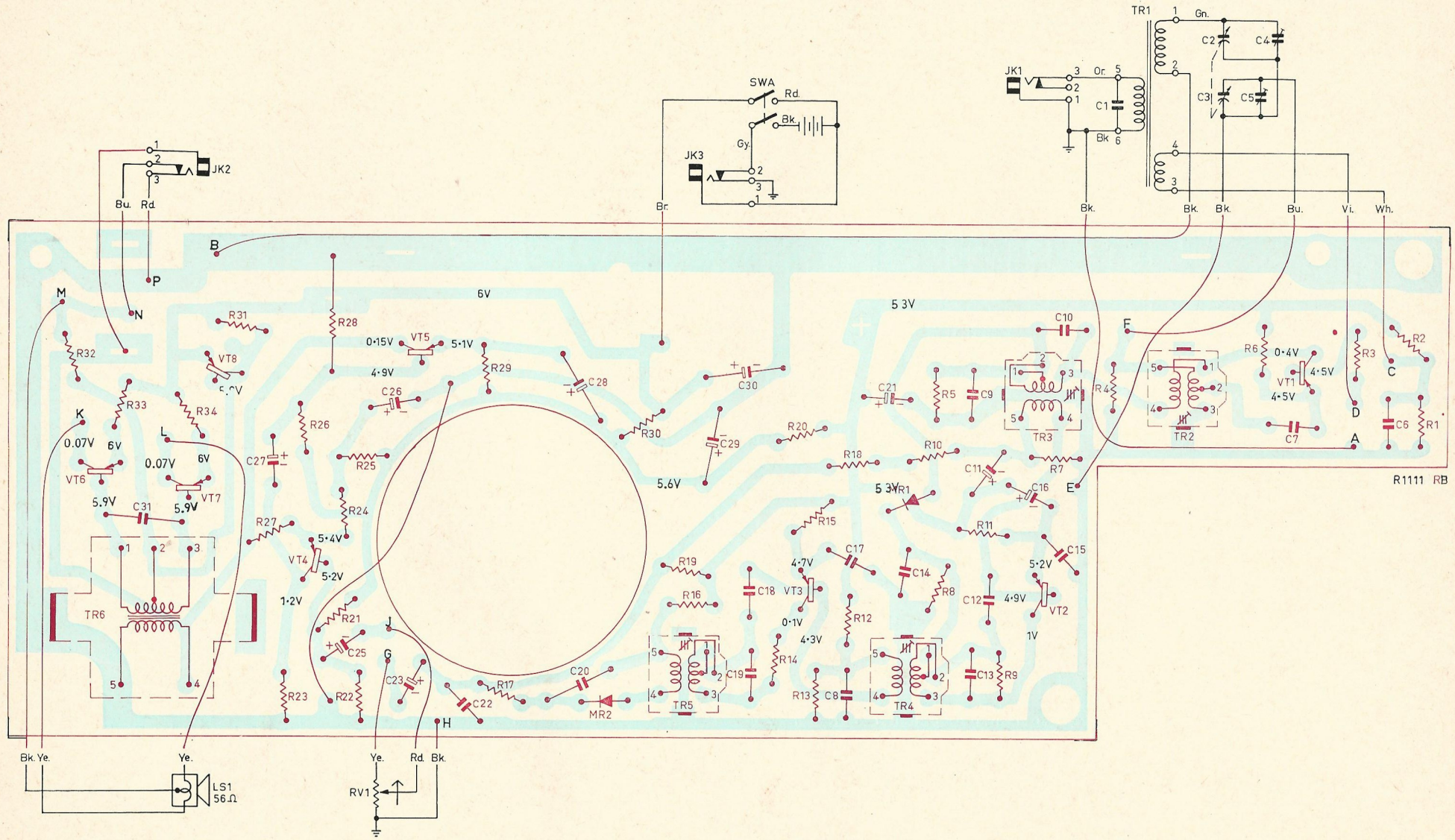

Notes: The diagram represents the view from the wiring side of the printed board.
Blue indicates the printed wiring.
Red indicates components and leads mounted on the remote side of the board.
Black indicates those components and leads mounted on the wiring side or completely removed from the board.
All voltages shown are positive with respect to the board earth (negative terminal of the battery) and measured with no signal input and volume maximum clockwise using a 20,000 ohm/volt meter.

CIRCUIT CODE

CODE No.	DESCRIPTION	PART No.
	RESISTORS	
	All Resistors composition type unless otherwise stated	
R1	39K ohms ±10% ½ watt	614684
R2	10K ohms ±10% ½ watt	612025
R3	100 ohms ±10% ½ watt	604031
R4	100K ohms ±10% ½ watt	616017
R5	1K ohms ±10% ½ watt	608025
R6	2.2K ohms ±10% ½ watt	609442
R7	68K ohms ±10% ½ watt	615494
R8	1.5K ohms ±10% ½ watt	608705
R9	220K ohms ±10% ½ watt	616721
R10	2.7K ohms ±10% ½ watt	609862
R11	390 ohms ±10% ½ watt	606254
R12	10K ohms ±10% ½ watt	612025
R13	39K ohms ±10% ½ watt	614684
R14	100 ohms ±10% ½ watt	604031
R15	820 ohms ±10% ½ watt	607665
R16	100 ohms ±10% ½ watt	604031
R17	100 ohms ±10% ½ watt	604031
R18	2.7K ohms ±10% ½ watt	609862
R19	2.7K ohms ±10% ½ watt	609862
R20	100 ohms ±10% ½ watt	604031
R21	4.7K ohms ±10% ½ watt	610932
R22	47K ohms ±10% ½ watt	614961
R23	2.7K ohms ±10% ½ watt	609862
R24	22 ohms ±10% ½ watt	602320
R25	470 ohms ±10% ½ watt	606588
R26	1.5K ohms ±10% ½ watt	608705
R27	47K ohms ±10% ½ watt	614961
R28	8.2K ohms ±10% ½ watt	611846
R29	180 ohms ±10% ½ watt	604915
R30	47 ohms ±10% ½ watt	603091
R31	180 ohms ±10% ½ watt	604915
R32	2.2K ohms ±10% ½ watt	609442
R33	2.2 ohms ±10% ½ watt W.W.	600429
R34	2.2 ohms ±10% ½ watt W.W.	600429
RV1	2.5K ohms curve C, Volume W/S	620037
	CAPACITORS	
C1	560pf ±5% 100 VW polystyrene	224485
C2	9—167pf tuning Aerial }	
C3	9—79pf tuning Oscillator } Ass'y	66351
C4	2—9pf trimmer Aerial }	
C5	2—9pf trimmer Oscillator }	
C6	0.1μf +80% —20% 25VW Hi-K disc	227074
C7	0.005μf ±20% 200VW AEE W99	226005
C8	0.1μf +80% —20% 25VW Hi-K disc	227074

CODE No.	DESCRIPTION	PART No.
C9	0.04μf ±20% 200VW AEE W99	228750
C10	330pf ±5% N750 disc	223726
C11	25μf 3VW Electrolytic	229428
C12	2.2pf ±20% NPO disc	221494
C13	330pf ±5% N750 disc	223726
C14	0.04μf ±20% 200VW AEE W99	228750
C15	0.1μf +80% —20% 25VW Hi-K disc	227074
C16	100μf 6VW Electrolytic	229733
C17	0.1μf +80% —20% 25VW Hi-K disc	227074
C18	2.2pf ±20% NPO disc	221494
C19	330pf ±5% N750 disc	223726
C20	0.04μf ±20% 200VW AEE W99	228750
C21	75μf 10VW Electrolytic	229676
C22	0.04μf ±20% 200VW AEE W99	228750
C23	25μf 6.4VW Electrolytic	229254
C24	Not Used	
C25	4μf 10VW Electrolytic	228189
C26	100μf 6VW Electrolytic	229733
C27	25μf 3VW Electrolytic	229428
C28	100μf 3VW Electrolytic	229706
C29	400μf 10VW Electrolytic	229786
C30	400μf 10VW Electrolytic	229786
C31	0.1μf ±20% 25VW Hi-K disc	227083
	TRANSFORMERS	
TR1	Ferrite Rod Ass'y (incl C1)	53202
TR2	Oscillator Transformer	53200
TR3	1st I.F. Transformer	51268
TR4	2nd I.F. Transformer	51268
TR5	3rd I.F. Transformer	51270
TR6	Driver Transformer	53075
	TRANSISTORS AND DIODES	
VT1	AWV 2N1639	
VT2	AWV 2N1638	
VT3	AWV 2N1638	
VT4	AWV 2N408	
VT5	AWV 2N408	
VT6	AWV AS128	
VT7	AWV AS128	
VT8	AWV AS22	
MR1	AWV 1N87A	
MR2	AWV 1N87A	
	MISCELLANEOUS	
LS1	5" x 3" Speaker	50070
JK1	External Aerial Jack	417019
JK2	Earphone Jack	417019
JK3	Battery Saver Jack	417405
SWA	On/Off Switch (on RV1)	