VESTAX

SERVICE NOTE

MODEL : PMC-580

Vestax Corporation Service Department

(2008-08-03)

VESTAX CORP. TOKYO
info@vestax.com
VESTAX SERVICE EUROPE
RHEINSTR. 213
53332 BORNHEIM/GERMANY
Tel. +49 2222 952372
Fax +49 2222 952374
tech@vestax.com

PMC-580

A scion of the PMC-50, the 24bit full digital mixer of the next generation is now here.
A multi effecter and LOOP control individually equipped on each program channel along with an effect unit for the MASTER and MIC channel section. The significant layout of the buttons and knobs of the PMC-580Pro enable DJs to control 6 different effects and different parameters all at once. The PMC-580Pro also comes with USB connection, SPDIF digital IO, a new AD/DA analog circuit and 2 band EQ for monitor/booth output as an answer to the demands of NEXT STYLE DJs in the scene.

FEATURES

●6 program multi effecters to garnish the mix and DJ performance.
Each program channel has a 6 effect multi effecter with simple controllability, in addition to effects equipped in the MIC and MASTER section. A maximum of 6 different effects can be applied to the sound at the same time, powered by 5 DSP's (Digital Signal Processor) and 3 CPU's, the core parts which make such features possible to be performed.

<MIC EFFECTER / 3 EFFECTS>
-Pitch Shift
-Distortion
-MIC Echo

<PGM CH EFFECTER / 6 EFFECTS>
LOOP
DELAY
LOW CUT DELAY
REVERB
FLANGER
FILTER SWEEP

<MASTER EFFECTER / 11 EFFECTS>
AUTO LPF (Low Pass Filter)
AUTO BPF (Band Pass Filter)
AUTO HPF (High Pass Filter)
FLANGER
PHASER
DELAY
REVERB
AUTO PAN
PITCH SHIFT
TREMOLO
PANNING DELAY

●Intuitive effect operation

-The PMC-580Pro's effects can be operated with 2 different effect switch modes.

<MOMENTARY MODE>
Useful for when you want instant effects on short phrases. The effect will be applied to the sound only while the effect button is pushed.

<ALTERNATE MODE>
-Useful for when you want to apply effects in to a long mix. The effect will be applied to the sound once the effect button is pushed, and will continue to be until the effect button is pushed again.

＊Some effects apply to the sound differently regarding the selected effect switch mode.

●High quality design for supreme CLUB sound

-The PMC-580Pro is loaded with 5 high spec DSP chips. 3 to process effects and 2 for mixing sound signals.

-The Enhanced Dual Bit method, a high performance chip technology of ASAHIKASEI is applied to the AD/DA section of the PMC-580Pro, where sound signals are converted between digital and analog. (48 kHz/ 24bit)

-The PMC-580Pro is generated by a high capacity institutional power adaptor, which gains the heavy low groove required for supreme CLUB sound. The internal power supply which produces the sound signal circuit runs on +/-18V. With the two combined, +/-24dB of headroom is produced (analog output), creating dynamic sound.

-HI GAIN TRIM control circuit is a new feature designed to bridge the gap between digital media, MP3s and CD source sound levels.

-EQ / ISOLATOR select switch

-An EQ/ISOLATOR select switch is located on each program channel to enable DJs to select their preference sound adjustment method in regards of the music they play.

-BEAT KEY is a feature which operates simultaneously with the auto BOOM counter and TAP BPM counter.

-BEAT KEY will control the effects BPM along with the detected BPM of the playing track, selected from: 8, 4, 2, 1, 3/4, 2/3, 1/2, 1/4 and 1/8.

●INPUT/OUTPUT

-The two 44.1k, 48kHz sampling rate digital inputs enable digital connection and provide a sound system with no sound deterioration.

-Digital music files can be played from computers and tracks can be recorded to computers via USB input/output, a standard feature for digital mixers. (The USB circuitry of the PMC-580Pro utilizes the driver device within the operating system of the computer and does not require any specific driver to be installed)

●OPERATION

-Smooth 60mm input faders for high precision mixing.

-The reliable Vestax CF-PCV is applied as the cross fader together with fader curve control, suitable for mixing and scratching.

-The top panel layout is designed considering the DJ to play intuitively without mixing up the effect section and sound control section during club performance.

-Large effect knobs for dynamic effect control.

-Input faders and the cross fader can be easily replaced by detaching the section top panel.

●OPTION

-The DX panel, an option item to increase inputs and outputs can be installed to the front panel for DJs who to wish to use DJ software with the PMC-580Pro.

●CLUB DJ FEATURES

-2 Band EQ, STEREO / MONO, select switch and CUE / MASTER select on BOOTH OUT and headphones to support the DJ when they're in the mix.

-The MIC section comes with a 2 Band EQ and TALKOVER switch for advanced mic performance.

-Club standard XLR connection applied to MASTER // BOOTH OUT.

PGM SECTION

P-① INPUT SELECT SWITCH
Selects the PGM channels input source. (Phono / Line)

P-② GAIN VOLUME
Adjusts the PGM channels input level.

P-③ BALANCE VOLUME
Adjusts the PGM channels L/R balance.

P-④ EQ SELECT SWITCH
Selects the PGM channels sound quality adjust control from EQ, OFF and ISOLATOR.

P-⑤ EQ HI
P-⑥ EQ MID
P-⑦ EQ LOW

P-⑧ PGM LEVEL METER
Displays the PGM channels sound level

P-⑨ EFFECT SW TYPE
Selects the PGM channel effects switch mode. (Alternate / Momentary)

P-⑩ EFFECT PARAMETER
P-⑪ PGM EFFECT BUTTON
P-⑫ EFFECT LEVEL
(PGM Effect Function & operation ⇒ Page11)

P-⑬ MONITOR CUE BUTTON
Selects the PGM channels sound to be monitored.
(Monitors the post PGM effecter, pre Input Fader sound)

P-⑭ CF ASSIGN SWITCH
Assigns the PGM channels sound to A, master and B of the crossfader.

P-⑮ INPUT FADER VOLUME
Adjusts the PGM channels sound level.

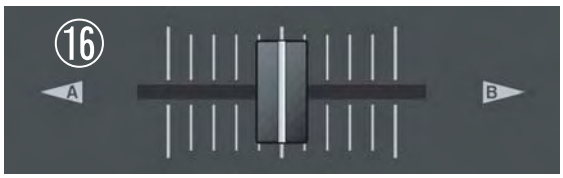

P-⑯ CROSS FADER VOLUME
Mixes the sound signals assigned to the A and B side of the crossfader.

MIC / BOOTH / MONITOR SECTION

M-① MIC INPUT JACK
Input connection for microphones. XLR plugs (balanced) and 1/4inch phono plugs can be connected to the combo jack.

M-② MIC TRIM VOLUME
Adjusts the microphones input level.

M-③ MIC EQ HI
M-④ MIC EQ LOW

M-⑤ TALK OVER SWITCH
This switch lowers all PGM channels sound level in order to clearly output the mic sound.

M-⑥ MIC EFFECT SELECT SWITCH
Selects the type of effect you wish to apply to the mic sound.

M-⑦ MIC EFFECT VOLUME
Adjusts the parameters of the mic effect.
(Mic effect control ⇒ Page 16)

M-⑧ MIC LEVEL VOLUME
Adjusts the microphones sound level.

M-⑨ MIC PEAK INDICATOR
This LED blinks when the microphones sound level is too high.

B-⑩ BOOTH SELECT SWITCH
Selects the BOOTH OUT output sound. (CUE / MASTER)

B-⑪ BOOTH (MONO / STEREO) SELECT SWITCH
Selects BOOTH output from MONO and STEREO.

B-⑫ BOOTH EQ HI
B-⑬ BOOTH EQ LOW

B-⑭ BOOTH OUT LEVEL VOLUME
Adjusts the output sound level sent to BOOTH OUT.

Mo-⑮ MONITOR EQ HI
Mo-⑯ MONITOR EQ LOW

Mo-⑰ MONITOR SELECT VOLUME
Selects the sound you wish to monitor via headphones. (CUE / MASTER)

Mo-⑱ MONITOR VOLUME
Adjusts the output sound level sent to the headphones.

Mo-⑲ MONITOR (MONO / STEREO) SELECT SWITCH
Selects headphone output from MONO and STEREO.

Mo-⑳ MONITOR OUTPUT JACK
Connection for headphones.

REAR PANEL SECTION

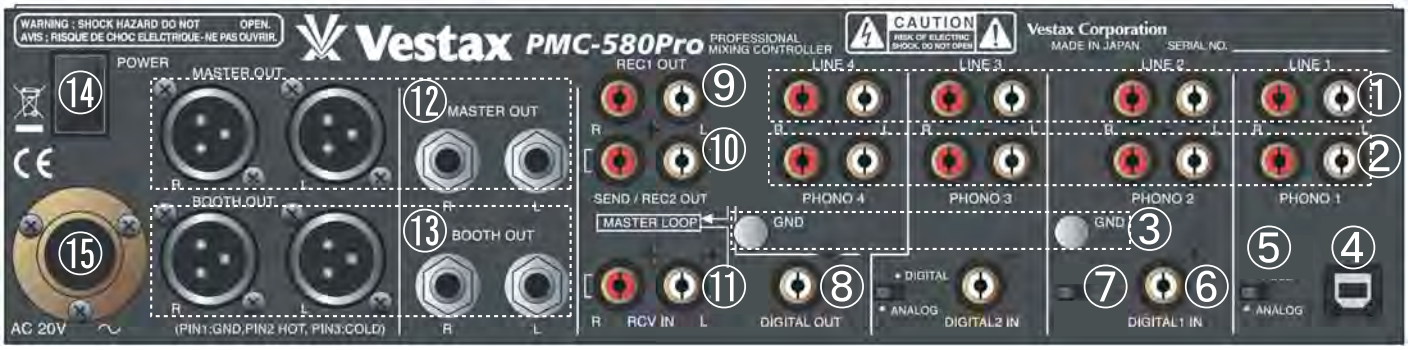

R-① LINE INPUT JACK
LINE Input connection for each PGM channel. Connect devices such as CD players, MD Players, DAT, VTR Sound cables, MP3 Players and Audio interfaces.

R-② PHONO INPUT JACK
Phono input connection for each PGM channel. Connect turntables with MM cartridges.

NOTE: Amplifiers and Transformers are required if using MC cartridges.

R-③ GND TERMINAL
Connect the turntables ground cable to this terminal.

R-④ USB IN/OUT JACK
USB connection enables input sound data from computers and output the mixer's master output.

NOTE: No driver installment is required for connection with computers via USB. The computers OS will automatically run USB AUDIO DEVICE when the mixer is connected.

R-⑤ USB / ANALOG SELECT SWITCH
Selects the input source of PGM1 between analog input and USB digital input.

NOTE: GAIN control of PGM1 will be cancelled when USB is selected.

R-⑥ DIGITAL INPUT JACK
Digital input connection for PGM 2 and PGM 3. Connect devices with digital connection such as CD players.

R-⑦ DIGITAL IN / ANALOG SELECT SWITCH
Selects the input source of PGM 2 and 3 between analog input and digital input

NOTE: GAIN control of PGM 2 will be cancelled when digital is selected

R-⑧ DIGITAL OUT JACK
Digital output connection. (Outputs REC out digital signals)

R-⑨ REC1 OUTPUT JACK
Outputs REC sound signals. (REC sound is PRE Master and PRE BOOTH volume)

R-⑩ SEND / REC2 OUTPUT JACK
Output connection for AUX send. Connect to the input of devices such as external effecters. This output sends out the same signal as REC1.

R-⑪ RCV INPUT JACK
Input connection for AUX receive. Connect to the output of devices such as external effecters.

R-⑫ MASTER OUTPUT
Output connection for MASTER. Connect to devices such as amplifiers. 1/4inch phono jacks are unbalanced and XLR jacks are balanced. (HOT 2pin)

R-⑬ BOOTH OUTPUT
Output connection for BOOTH OUT. Connect to devices such as amplifiers. 1/4inch phono jacks are unbalanced and XLR jacks are balanced. (HOT 2pin)

R-⑭ POWER SWITCH
This switch turns the power off the mixer ON.

NOTE: Please make sure that all devices connected to the mixer are turned OFF or have the volume turned down when operating this switch.

R-⑮ AC ADAPTOR INPUT JACK
Connect the VESTAX AC-20 power adaptor included with the mixer. DO NOT use any other power adaptor for it may cause damage. Any damage caused by using a different power adaptor will not be warranted.

FRONT PANEL SECTION

F-⑯ MONITOR OUTPUT JACK
Connection for headphones.

F-⑰ C.F. CURVE VOLUME
Adjusts the curve characteristic of the crossfader.
MIN ⇒ Mix curve
MAX ⇒ Scratch curve

F-⑱ I.F. CURVE VOLUME
Adjusts the curve characteristic of the Input fader.

F-⑲ OPTION SLOT

PGM EFFECT FUNCTION & OPERATION

PGM EFFECT FUNCTIONS & OPERATION

Effect Switch Type Select
The effect switches on each PGM channel can be operated in 2 ways.

ALTERNATE MODE

The effect will be turned ON once the effect button is pushed and will be turned OFF by pushing the button again. This mode is suitable for when you wish to apply the effect to long mixes.

MOMENTARY MODE

The effect will be turned ON only while the effect button is pushed. This mode is suitable for when you wish to apply the effect to a short phrase/mix.

＊Operation for each effect in the modes above are different

PGM EFFECT FUNCTION

Each PGM channel of the PMC-580 has an individual effect unit with 6 effects. Each channel can set a different effect at the same time. (Ex. PGM1→ delay, PGM2→ loop, PGM3→ flanger, PGM4→ reverb)

Each effect can be adjusted with the following knobs.

Effect parameter: Adjusts the parameter level of the selected effect.
Effect level: Adjusts the mix level between the effect sound and bypass sound.

＊Functions of each knob change for each effect

BPM SYNC FUNCTION

Each effects time and cycle can be synchronized with the beat of the AUTO BPM / TAP BPM counter located on the right of the mixer.

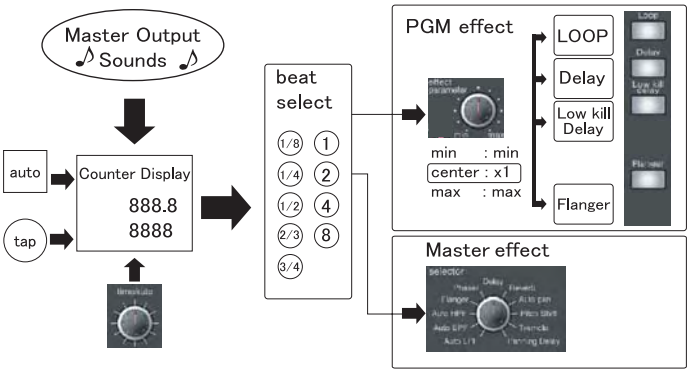

The BPM of the output sound is counted with the TAP button or with the internal auto BPM counter. (Can be adjusted with the master effect time control)

The counted BPM is used to set the effect BPM, located above the BPM display. The time/cycle of each PGM and MASTER effect will be in sync with the set effect BPM.

＊Refer to each effects function guide for operational details

PGM EFFECT FUNCTION & OPERATION

LOOP

The length of the loop is selected with the Beat select buttons and played to the automatically/ manually set BPM. Maximum length of a single loop is 5,400ms.

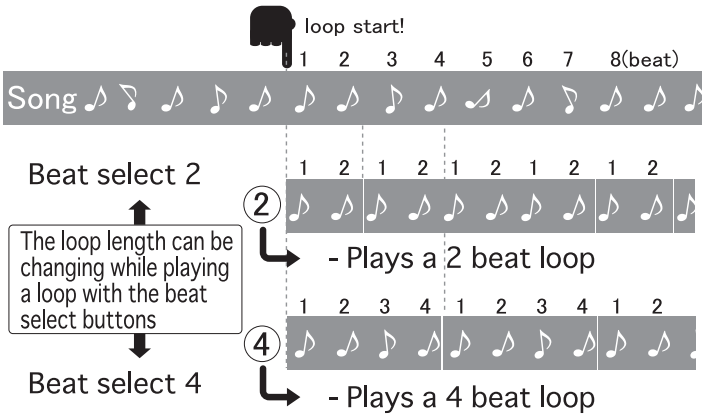

(effect parameter)

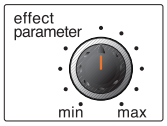

Adjusts the loop length(beats) set with the beat select button between x1/8 ~ x8. The center point value is times 1 of the selected beat select button.

(effect level)

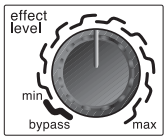

Adjusts the mix level of the LOOP sound and DRY sound.

sw type LOOP ALTERNATE MODE LOOP OPERATION

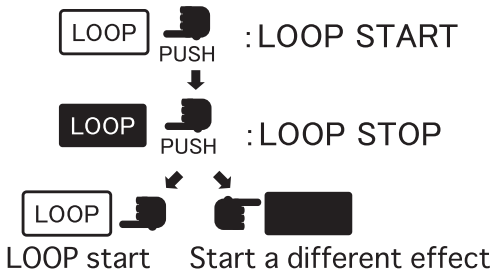

sw type on LOOP MOMENTARY MODE LOOP OPERATION

Memory the LOOP start point

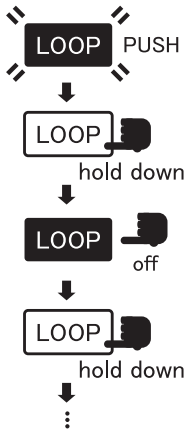

LOOP start

LOOP is played while the button is pushed

The LOOP is played from the LOOP start by pushing again

NOTE: The LOOP memory can be deleted by changing the switch mode or selecting a different effect.

Delay

The delay time is set to the automatically/manually counted BPM and beats selected with the beat select buttons. The maximum delay time is 2,700ms at stereo.

LOW Kill Delay

The low frequency sound is masked with a filter function and the delay sound is applied only to the mid-hi frequency sound.

The delay time is set up to the maximum length when the delay starts and repeats in order of each parameters setting. The time parameter and beat settings can be changed while a delay effect is turned on. (The delay sound will change such like an analog delay continuously when the time parameter is changed when the delay effect is turned on)

(effect parameter)

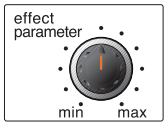

Adjusts the delay time set with the beat select button.

(effect level)

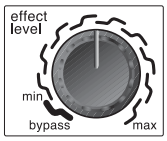

Adjusts the feedback level and the mix level of the delay sound and DRY sound.

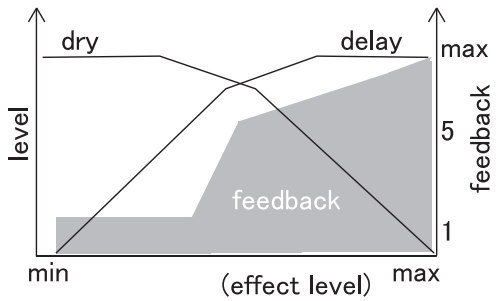

PGM EFFECT FUNCTION & OPERATION

ALTERNATE MODE DELAY OPERATION

:DELAY START

:DELAY STOP

Start delay

Start a different effect

MOMENTARY MODE DELAY OPERATION

hold down

:DELAY START

The delay effect stops when the button is released but fully plays the remaining delay sound.

Start delay

Start a different effect

DJ technique Change the delay tempo

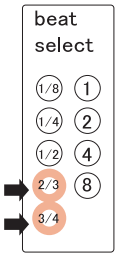

Push the 2/3 or 3/4 beat select button while a delay effect is applied to a 4 beat track and it will add an effect to the rhythm.

DJ technique Let the delay sound remain

This is a technique where you let the feedback of the delay remain, very useful when switching to a different track.

hold down

Push and hold the DELAY button in momentary switch mode

Turn the effect level to max when letting go of the button

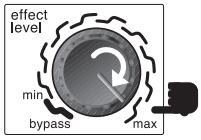

The feedback created before the delay being turned off remains and fades out

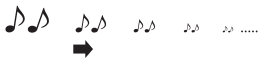

Reverb

The depth of the reverb sound and the mix level with the input sound can be adjusted.
As an additional function, the input sound can be cut to output the reverb sound on its own.

(effect parameter)

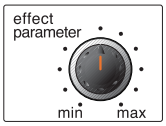

Sets the depth of the reverb.

(effect level)

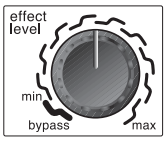

Adjusts the mix level of the reverb sound and DRY sound. The reverb sound will remain on its own when the knob is turned to max.

DJ technique Let the reverb remain

The reverb on each PGM channel has an additional effect for DJ play.

(effect level)

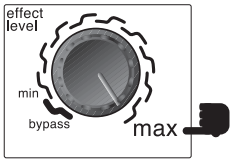

The input sound is cut when the effect level knob is turned to max and the reverb created until then will remain. This is useful to give the track a little edge or when mixing in another track.

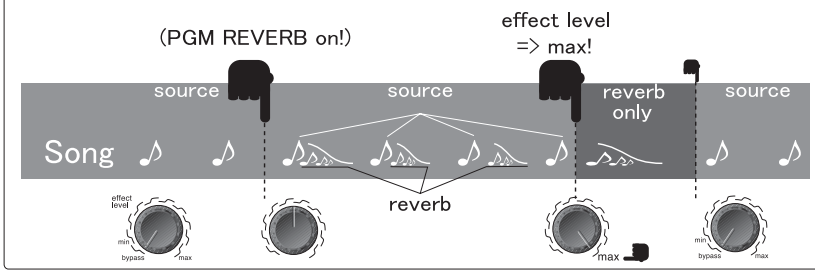

PGM EFFECT FUNCTION & OPERATION

Reverb

ALTERNATE MODE REVERB OPERATION

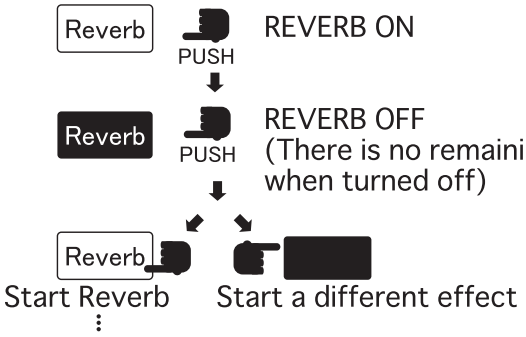

MOMENTARY MODE REVERB OPERATION

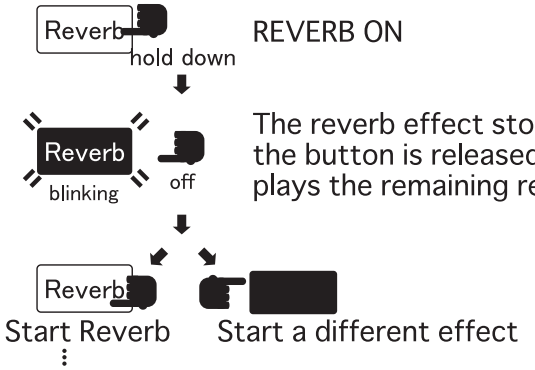

Flanger

Flanger is an effect which mixes the modulated time-delayed input sound with the original input sound, and produces an up and down sweep effect. The LFO cycle is adjusted automatically to the automatically/manually counted BPM and beats selected with the beat select buttons.

(effect parameter)

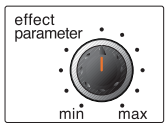

Adjusts the LFO cycle set with the beat select button.

Min = LFO rate time x 1/8
Center = LFO rate time x 1
Max = LFO rate time x 8

(effect level)

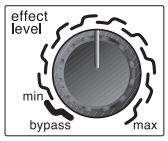

Adjusts the mix level of the flanger sound and DRY sound.

<Effect retrigger start >

The flanger effect will start from the same modulation point when it is (re)started.

* When the flanger button is ON in momentary mode
* When the flanger button is ON in alternate mode
* When the beat select button is reselected (including the same button)

ALTERNATE MODE FLANGER OPERATION

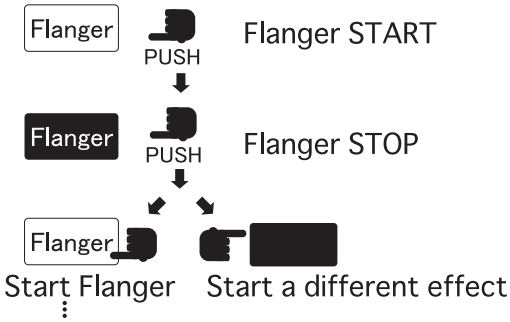

MOMENTARY MODE FLANGER OPERATION

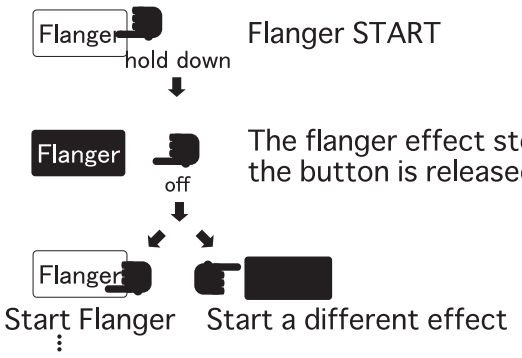

PGM EFFECT FUNCTION & OPERATION

Filter Sweep FILTER SWEEP (HI Pass Filter / LOW Pass Filter)

Filter sweep transforms the cut-off frequency of the input sound and gains a masking filter effect. The filter type can be selected from a HI-PASS filter and a LOW PASS filter, and the peak GAIN (resonance) is adjustable.

(effect parameter)

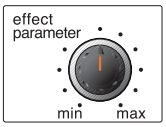

Selects the filter type from HI-PASS and LOW-PASS, and adjusts the peak GAIN (resonance)

Min = LOW PASS FILTER Max Resonance (Peak level +10dB)
Center = HI PASS FILTER Min Resonance (Peak level 0dB)
Max = HI PASS FILTER Max Resonance (Peak level+10dB)

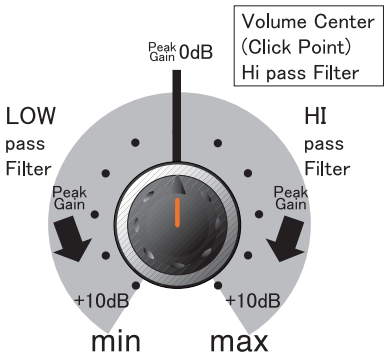

(effect level)

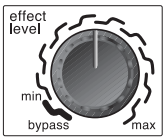

Adjusts the peak frequency of the filter.

LOW Pass Filter

Min=Variable to max fc
↓
Max=Outputs the DRY sound

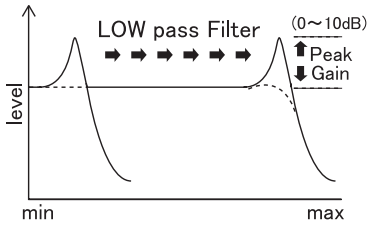

Hi Pass Filter

Min= Outputs the DRY sound
↓
Max=Variable to max fc

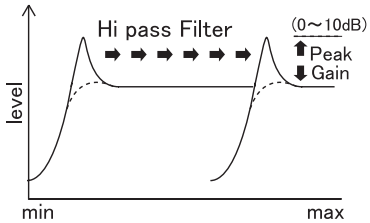

DJ technique filter/sweep

The effect parameter knob sets the effect as a peak-less HI-PASS filter when it is set to the center point.
A low cut sound is created by adjusting the effect parameter knob such like an isolator.

sw type Filter Sweep ALTERNATE MODE FILTER SWEEP OPERATION

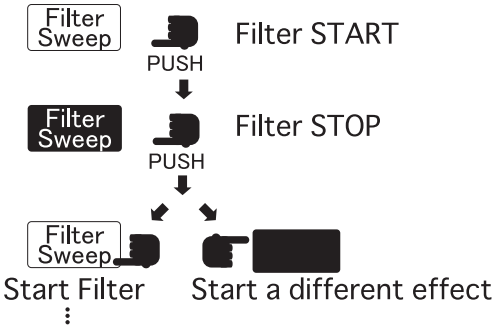

sw type on Filter Sweep MOMENTARY MODE FILTER SWEEP OPERATION

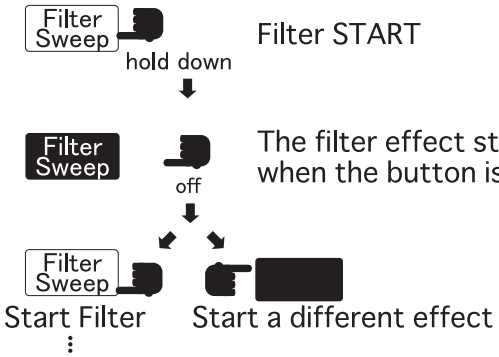

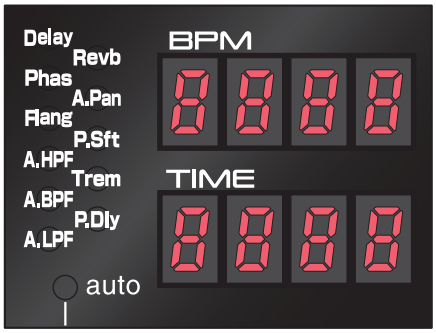

BPM and TIME display:

BPM synchronized effects such as Loop, Delay and Flanger (and others) have limits to their time/cycle settings.
If the time/cycle is over the limit of the selected effect, the effect button will blink when it is selected and will display the limit value as shown in the picture and will run at that value.

Check the effect function chart for each limit value.

MIC EFFECT FUNCTIONS AND OPERATIONS

MIC EFFECT FUNCTIONS AND OPERATIONS

The MIC channel of the PMC-580 has 3 individual effects that operate separately from the MASTER effects and PGM channel effects.

CAUTION!!
A MASTER effect cannot be applied to the MIC effect sound.
The MIC effect sound is assigned directly to the output section and is not sent to the MASTER section.

PITCH SHIFT

Shifts the input sound within a range of 1 octave up and 1 octave down.
(The DRYT sound will not be outputted when this effect is operated)

(effect)

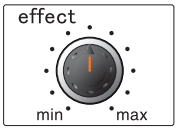

Adjusts the pitch
min = 1 octave down
center = No pitch shift
max = 1 octave up

DISTORTION

Drives the input sound and creates a distortion effect.

(effect)

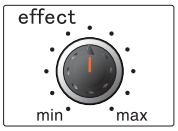

Adjusts the distortion level
min = weak distortion
center = medium level distortion
max = strong distortion

CAUTION!!
Strong distortion can cause feedback noises. Please be careful with the sound and distortion levels.

MIC ECHO

Creates an echo sound. The ECHO time is fixed at 100ms.
(This effect is not affected by the BPM counter and beat select buttons)

(effect)

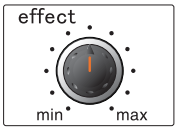

Adjusts the number of times the echo is repeated
min = 1 repeat
↓
max = Maximum repeat level

MASTER EFFECT FUNCTIONS AND OPERATIONS

The MASTER channel of the PMC-580 has a multi effecter with 11 individual effects, which operate separately from the MIC effects and PGM channel effects.

MASTER EFFECT ASSIGN

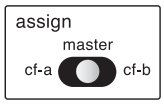

The master effect can be assigned to each side of the cross fader and the main master sound.

BPM SYNC

The time and cycle of each effect synchronizes with the AUTO/TAP BPM counter located on the right of the mixer.

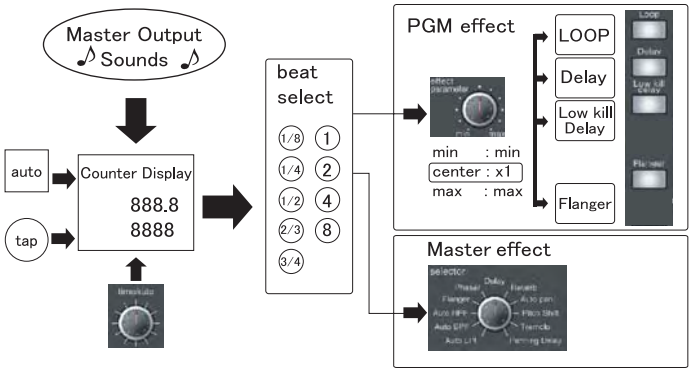

The BPM of the output signal can be counted manually with the TAP button or automatically with the built-in BPM counter. (Adjustable with the master effect time knob)

The beat select buttons determine the number of beats (length) which will be applied to the PGM and MASTER effect time/cycle parameter.

Each effect functions in a different way. Please refer to each effects operation guide.

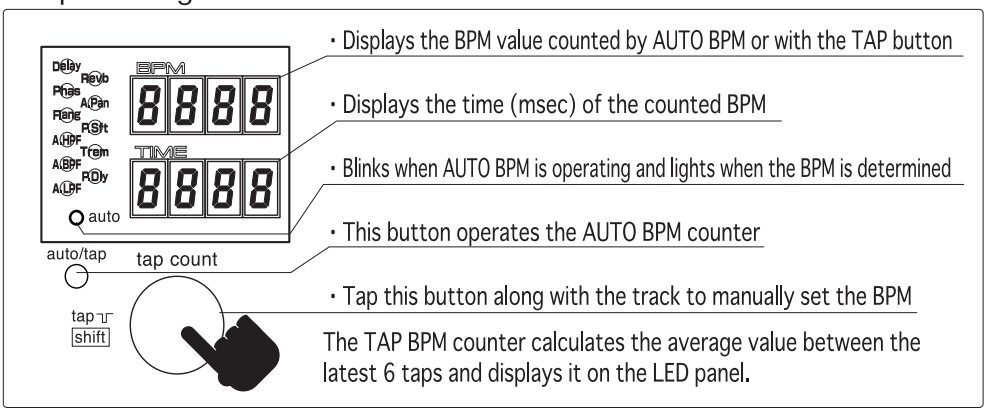

PRE MONITOR MASTER EFFECT

The MASTER EFFECT sound can be monitored through headphones, even when the MASTER EFFECT SWITCH is turned off. (The effect will not be sent to output)

Push the cue button next by the effect on/off button and set the monitor select volume in the monitor section to cue. The effect sound can be monitored through the headphones to check before it is actually outputted.

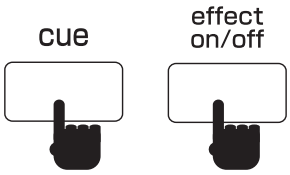

NOTE: The MASTER cue button and each PGM cue button cannot be turned ON together

MASTER EFFECT FUNCTIONS AND OPERATIONS

AUTO LPF (LOW PASS FILTER)

Auto low pass filter is an automatic filter effect which operates in a LFO cycle set by the BPM count value and beat select button

＊The peak frequency of the FILTER / SWEEP effect in the PGM effecter is manually adjustable, but the filter effect in the MASTER effecter fully synchronized with the BPM. Please use the filter effect whichever suits your DJ style

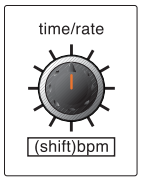

<time/rate>
The first value of the knob is set by the BPM count value and beat select button.
The LFO cycle time is adjustable by turning the knob.

:1 click → +/-10mSec
(Push and turn knob)
:1 click → +/-1mSec

Minimum LFO rate 10mSec
Maximum LFO rate 5400mSec(LFO half cycle)

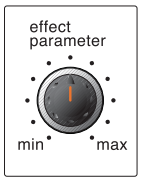

<effect parameter>
Adjusts the FILTER resonance (peak level)

Min → min resonance (peak gain 0)
Max → max resonance (peak gain +10dB)

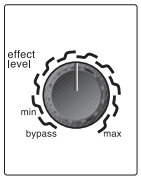

<effect level>
Adjusts the mix level of the FILTER sound and DRY sound. The output balance of the AUTO FILTER sound and DRY sound changes by turning the knob to the right.

<Effect trigger start>

The AUTO LPF effect will start from the same modulation point when it is (re)started.

＊When the AUTO LPF button is selected
＊When the flanger effect start button is turned ON
＊When the beat select button is reselected (including the same button)

AUTO BPF (BAND PASS FILTER)

AUTO HPF (HI PASS FILTER)

Auto band pass filter and auto hi pass filter are both automatic filter effects which operate in a LFO cycle set by the BPM count value and beat select button.

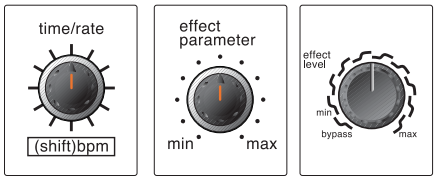

:Refer to the operation guide of LPF.

The FILTER peak frequency changes in order with the FO cycle set by the BPM count value and beat select button as shown below.

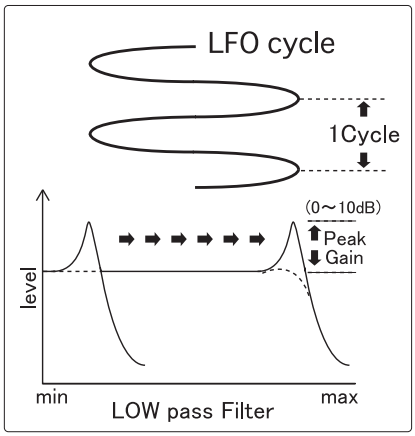

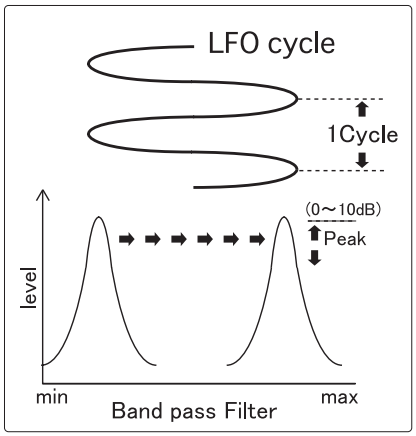

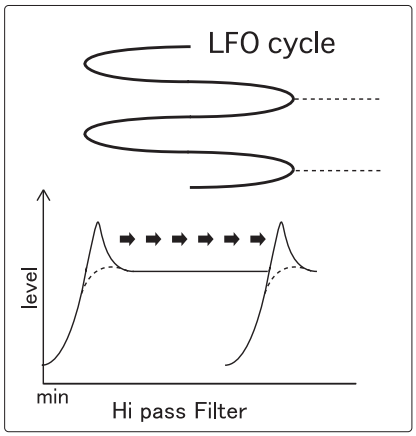

MASTER EFFECT FUNCTIONS AND OPERATIONS

FLANGER

Flanger is an effect which mixes the modulated time-delayed input sound with the original input sound, and produces an up and down sweep effect. The LFO cycle is adjusted automatically to the automatically/manually counted BPM and beats selected with the beat select buttons.

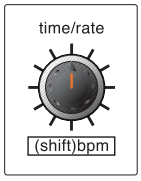

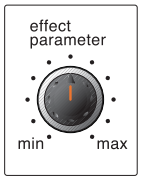

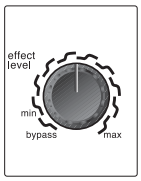

<time/rate>
The first value of the knob is set by the BPM count value and beat select button.
The LFO cycle time is adjustable by turning the knob.

:1 click ! +/-10mSec
(Push and turn knob)
:1 click ! +/-1mSec

Minimum LFO rate 25mSec
Maximum LFO rate 5000mSec(LFO half cycle)

<effect parameter>
Adjusts the depth of the LFO

Min → min resonance (peak gain 0)
Max → max resonance (peak gain +10dB)

<effect level>
Adjusts the mix level of the FLANGER sound and DRY sound.The output balance of the AUTO FLANGER sound and DRY sound changes by turning the knob to the right.

<Effect trigger start>

The AUTO FLANGER will start from the same point when it is (re)started.

* When the FLANGER button is selected
* When the flanger effect start button is turned ON
* When the beat select button is reselected (including the same button)

PHASER

Phaser is an effect which continually alters the tone by altering the phase of the sound and interfering it with the DRY sound. The tone of the phaser effect alters periodically. The LFO cycle is adjusted automatically to the automatically/manually counted BPM and beats selected with the beat select buttons.

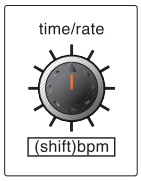

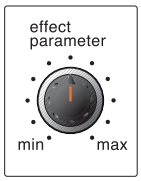

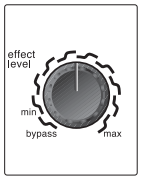

<time/rate>
The first value of the knob is set by the BPM count value and beat select button.
The LFO cycle time is adjustable by turning the knob.

:1 click → +/-10mSec
(Push and turn knob)
:1 click → +/-1mSec

Minimum LFO rate 25mSec
Maximum LFO rate 5000mSec(LFO half cycle)

<effect parameter>
Adjusts the resonance (peak level)

Min → min resonance (peak gain 0)
Max → max resonance (peak gain +10dB)

<effect level>
Adjusts the mix level of the PHASER sound and DRY sound.The output balance of the AUTO FLANGER sound and DRY sound changes by turning the knob to the right.

<Effect trigger start>

The AUTO PHASER will start from the same point when it is (re)started.

* When the PHASER button is selected
* When the phaser effect start button is turned ON
* When the beat select button is reselected (including the same button)

MASTER EFFECT FUNCTIONS AND OPERATIONS

DELAY

The delay time is set to the automatically/manually counted BPM and beats selected with the beat select buttons. The maximum delay time is 5,400ms at stereo.

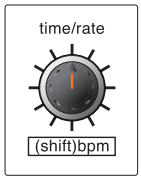

<time/rate>
The first value of the knob is the delay time set by the BPM count value and beat select button
The delay time is adjustable by turning the knob.
:1 click → +/-10mSec
(Push and turn knob)
:1 click → +/-1mSec

Minimum delay time : 10mSec
Maximum delay time : 5400mSec

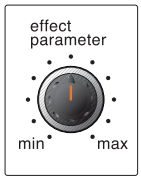

<effect parameter>
Adjusts the feedback level

Min → 1 FEEDBACK
Max → Infinitive FEEDBACK (doesn' t hold)

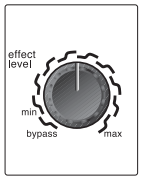

<effect level>
Adjusts the mix level of the DELAY sound and DRY sound. The delay sound increases and the DRY sound decreases by turning the knob clockwise, altering the output balance.

REVERB

Reverb adds a reverberant effect to the input sound. The depth of the reverb sound and the mix level with the input sound can be adjusted.

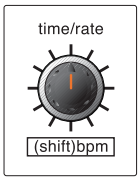

<time/rate>
Adjusts the decay time

Min → 0
Max → 127

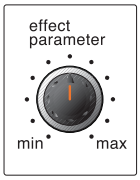

<effect parameter>
Adjusts the depth of the reverb (the depth size grows continuously from ROOM→HALL→PLATE)

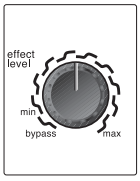

<effect level>
Adjusts the mix level of the REVERB sound and DRY sound.

AUTO PAN

Auto pan is an effect which sends the input sound back and forth between the left and right output. The length of the interval between the left and right output is set with the automatically/manually counted BPM and beats selected with the beat select buttons.

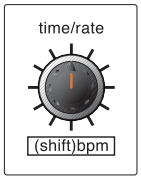

<time/rate>
The first value of the knob is the interval time set by the BPM count value and beat select button.
The interval time is adjustable by turning the knob.
:1 click → +/-10mSec
(Push and turn knob)
:1 click → +/-1mSec

Minimum LFO rate : 10mSec
Maximum LFO rate : 5400mSec

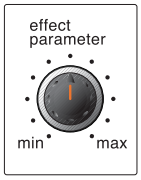

<effect parameter>
Adjusts the motion speed of the panning.

Min → LFO : sin wave
Max → LFO : Pulse wave

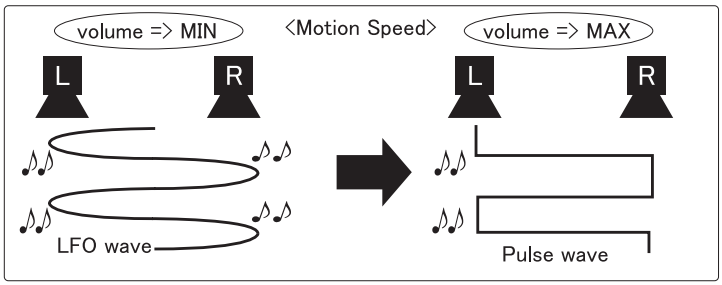

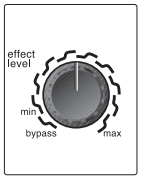

<effect level>
Adjusts the mix level of the AUTO PAN sound and DRY sound. The AUTO PAN balance increases by turning the knob clockwise.

PITCH SHIFT

Pitch shift alters the pitch of the input sound between -100% and +1 octave.

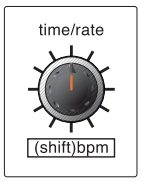

<time/rate>
Adjusts the pitch which is set with the effect parameter between +/-50%.

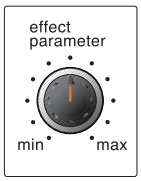

<effect parameter>
Adjusts the pitch.
Min → Shifts the original pitch -100% down (more than 1 octave)
Center → The pitch stays the same
Max → Shifts the original pitch 1 octave up

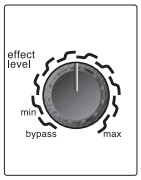

<effect level>
Adjusts the mix level of the PITCH SHIFT sound and DRY sound.

MASTER EFFECT FUNCTIONS AND OPERATIONS

TREMOLO

Tremolo produces a periodic variation in the volume of the inout sound. The tremolo length is set with the automatically/manually counted BPM and beats selected with the beat select buttons.

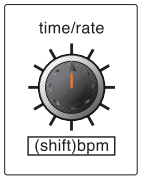

<time/rate>

The first value of the knob is the tremolo time set by the BPM count value and beat select button.
The tremolo time is adjustable by turning the knob.

:1 click → +/-10mSec
(Push and turn knob)
:1 click → +/-1mSec

Minimum Tremolo rate : 25mSec
Maximum Tremolo rate : 5000mSec

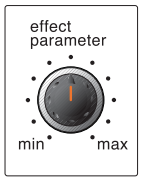

<effect parameter>

Adjusts the duty cycle

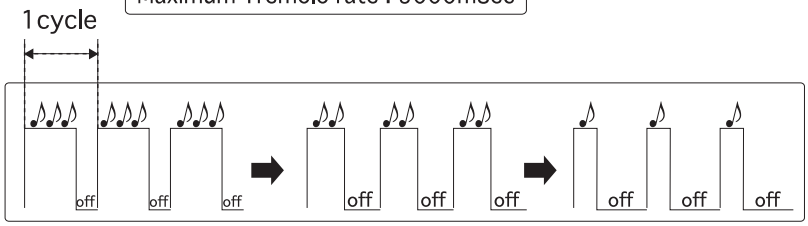

＊Duty cycle is the ON / OFF proportion of time as shown in the picture above

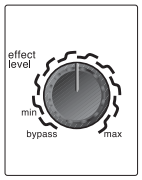

<effect level>

Adjusts the mix level of the tremolo sound and DRY sound
The tremolo balance increases by turning the knob clockwise, altering the output balance.

PANNING DELAY

Panning delay outputs the delay feedback between the left and right output.
The length of the interval between the left and right output is set with the automatically/manually counted BPM and beats selected with the beat select buttons.

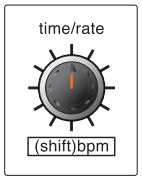

<time/rate>

The first value of the knob is the interval time set by the BPM count value and beat select button.
The interval time is adjustable by turning the knob.

:1 click → +/-10mSec
(Push and turn knob)
:1 click → +/-1mSec

Minimum delay time : 50mSec
Maximum delay time: : 5400mSec

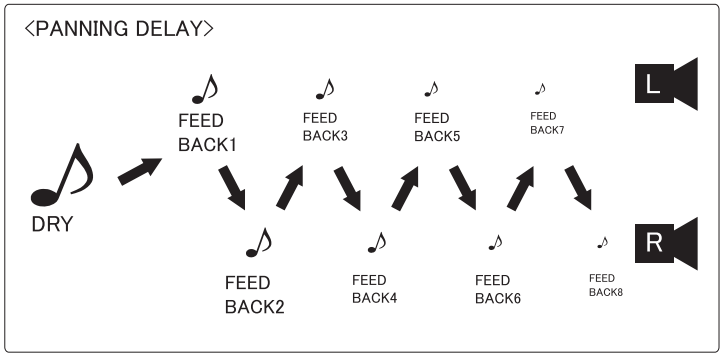

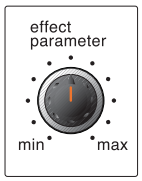

<effect parameter>

Adjusts the feedback level

Min → 1 FEEDBACK
Max → Infinitive FEEDBACK (doesn’ t hold)

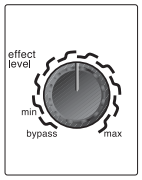

<effect level>

Adjusts the mix level of the DELAY sound and DRY sound.
The delay sound increases and the DRY sound decreases by turning the knob clockwise, altering the output balance.

Specification

- EFFECT -

<PGM>
○LOOP
○DELAY
○LOW CUT DELAY
○REVERB
○FLANGER
○FILTER SWEEP

<MASTER>
○AUTO LPF
○AUTO BPF
○AUTO HPF
○FLANGER
○PHASER
○DELAY
○REVERB
○AUTO PAN
○PITCH SHIFT
○TREMOLO
○PANNING DELAY

<MIC>
○PITCH SHIFT
○DISTORTION
○MIC ECHO

- INPUT / OUTPUT -

PHONO input		RCA PIN JACK
LINE/CD input		RCA PIN JACK
MIC input		COMBO JACK (XLR/PHONE)
DIGITAL input		RCA PIN JACK
RETURN input		RCA PIN JACK
MASTER output	(unbal.)	PHONE JACK
	(bal.)	XLR JACK
BOOTH output	(unbal.)	PHONE JACK
	(bal.)	XLR JACK
REC1/2(SEND) output		RCA PIN JACK
DIGITAL output		RCA PIN JACK
PHONES output		PHONE JACK
USB input/output		B-type USB JACK

- OPTION -

DX LINE input	RCA PIN JACK
DX LINE output	RCA PIN JACK

- GENERAL -

Power	AC-ADAPTOR / AC-20
Power Consumption-	40 W
Weight	8.5 kg
Demension	326 (W) × 406 (D) × 100 (H)

Sampling Rate		48kHz
	Mixer part	full digital, 32 bit DSP
	Effect part	full digital, 24 bit DSP
	CPU	32 bit * 2, 16 bit * 3
	ADC	24 bit E-Dual bit DELTA-SIGMA 106dB
	DAC	24 bit A-Multi bit DELTA-SIGMA 100dB
S/N Ratio		over 75 dBv (JIS-A)
Distortion		less than 0.05%
Freq response		20Hz - 20kHz ±3dB

- LEVEL -

INPUT Level / INPUT Impedance

	LINE	-10dBv / 18k ohm
	MIC	-50dBv / 5.4k ohm
	PHONO	-45dBv / 45k ohm
	RETURN	0dBv / 32k ohm

OUTPUT Level / Impedance

	MASTER	0dBv / over 10k ohm
		(bal.) over 600 ohm
	BOOTH	0dBv / over 10k ohm
		(bal.) over 600 ohm
	REC	-10dBv / over 10k ohm
	SEND	0dBv / over 10k ohm
	PHONES	190 mW/over 8 ohm/68ohm

- CHARACTERISTIC -

PGM Equalizer / Isolator

<Equalizer>

Hi	10kHz	±12dB
MID	100 - 10kHz	±12dB
LOW	100Hz	±12dB

<Isolator>

HI	10kHz	+10dB～cut
MID	100 - 10kHz	+10dB～cut
LOW	100Hz	+10dB～cut

MIC Equalizer

HI	3kHz	±12dB
LOW	100Hz	±12dB

BOOTH/PHONES Equalizer

HI	10kHz	±12dB
LOW	100Hz	±12dB

250-299(VR253,CN253)

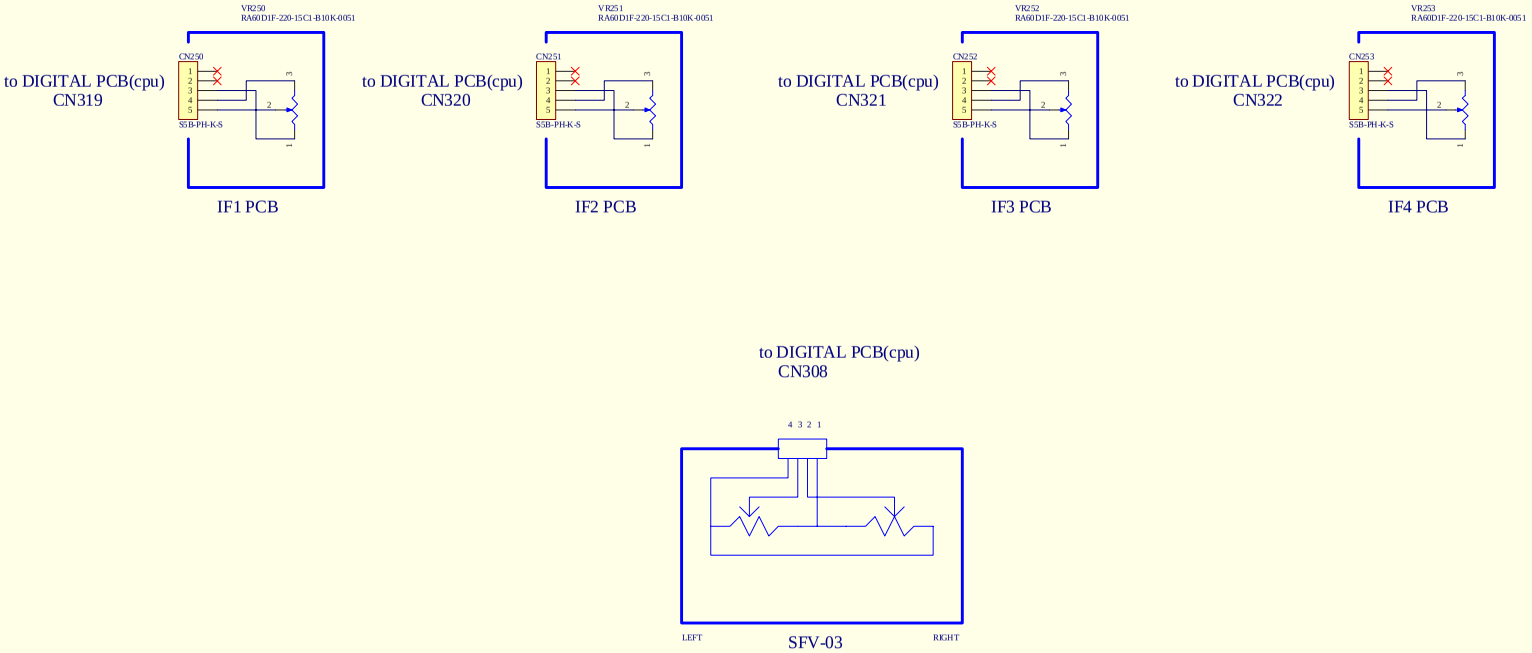

Model	PMC-580 prototype
Sheet	pmc580_ifcf
YANO CIRCUIT LABO	
5-Oct-2007	1 / 1

550-699(R693)

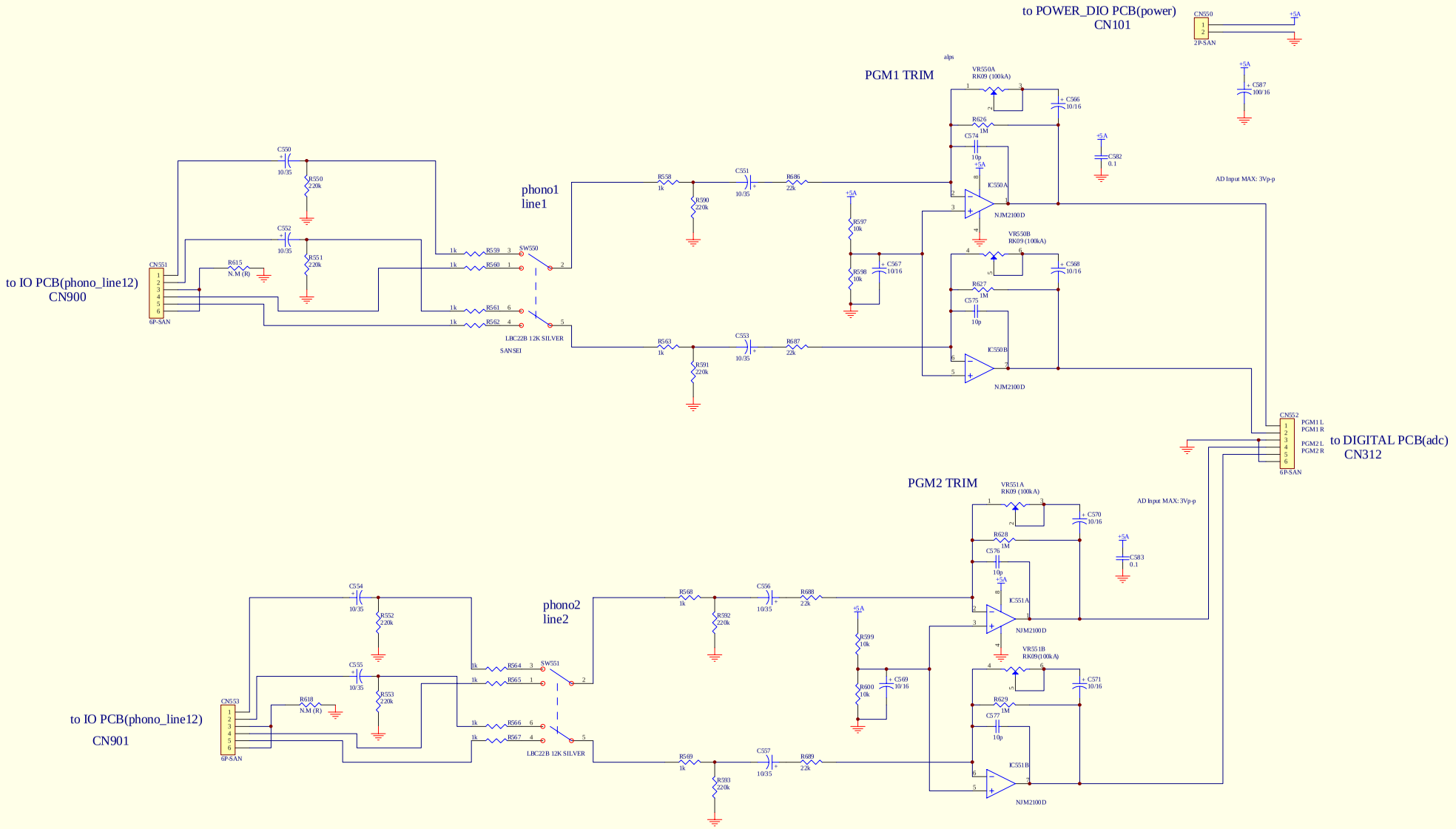

Model	PMC-580 prototype
Sheet	pmc580_panel (analog12)
YANO CIRCUIT LABO	
5-Oct-2007	1 / 5

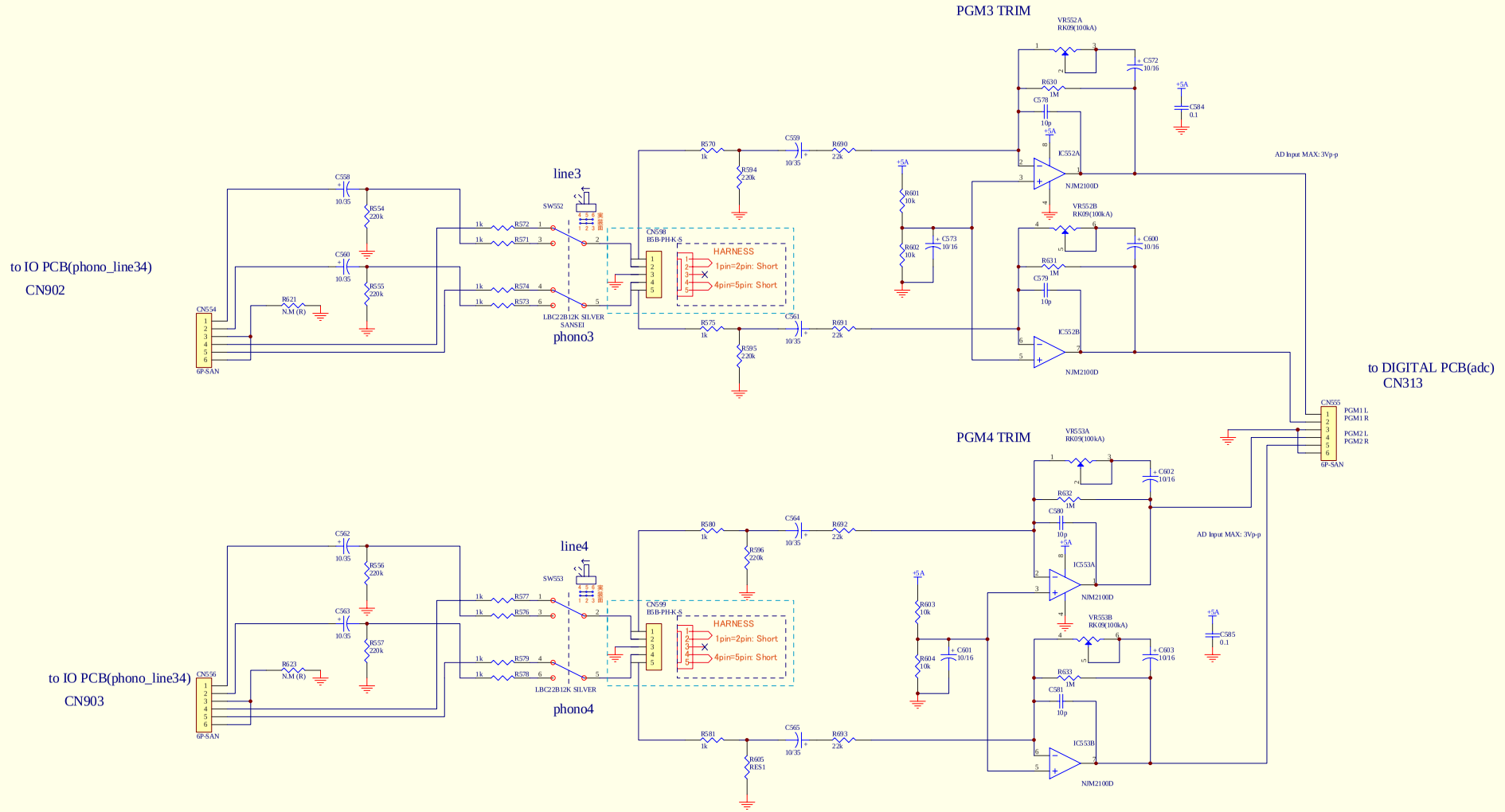

2007.8.2追加

(内容)
PC-DJ機器用のPGMチャンネル初段(TRIM前)に
IN/OUT端子基板をオプションで取付できるように、
PANEL PCB内のINPUT SW後にコネクターを用意
する。

(詳細)
またオプションボードを接続しないときは、このコネクター
にハーネスを取り付ける。
(1と2ピン、4と5ピンをショートしたハーネス)
追加するコネクターは、CN900とCN901の2つ。
このベースつきコネクタを部品面ではなく、実装面から
取り付ける。

この他、POWER dio基板も±電源＋gndの3ピン
コネクターを用意する。

Model	PMC-580
Sheet	pmc580_panel (anolog34)
YANO CIRCUIT LABO	
5-Oct-2007	2 / 5

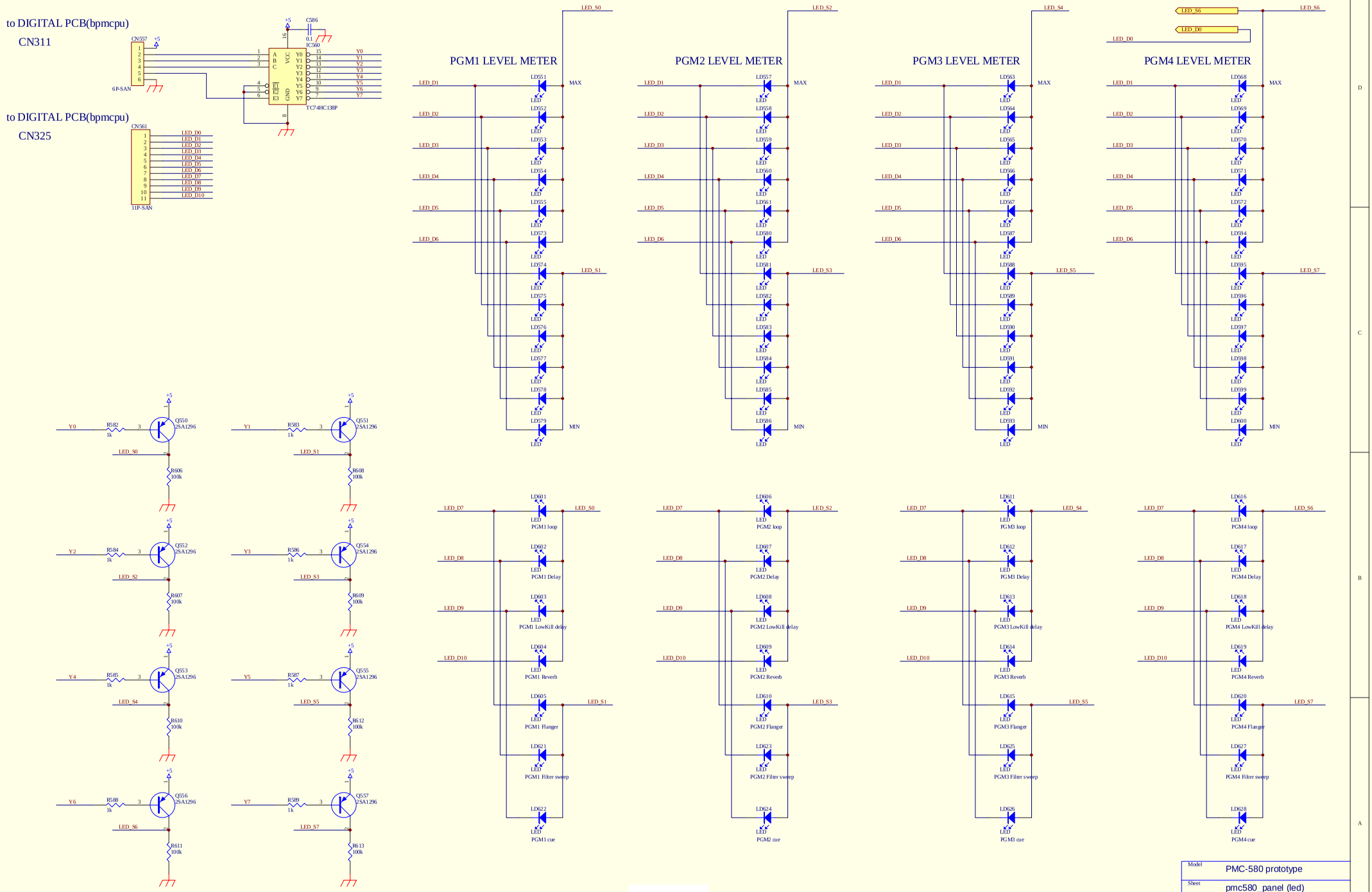

Model	PMC-580 prototype
Sheet	pmc580_panel (led)
YANO CIRCUIT LABO	
5-Oct-2007	5 / 5

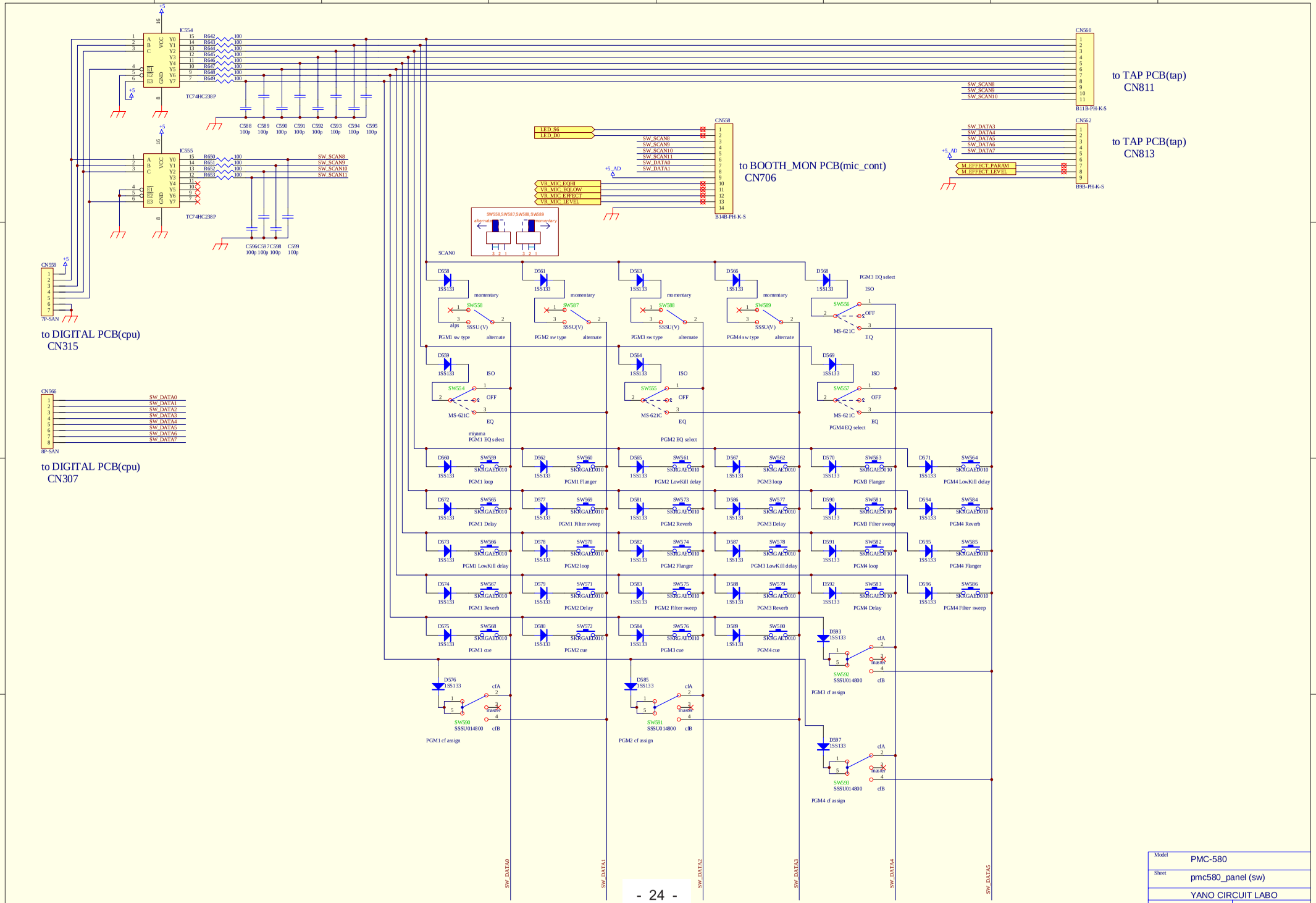

Model	PMC-580
Sheet	pmc580_panel (sw)
YANO CIRCUIT LABO	
5-Oct-2007	3 / 5

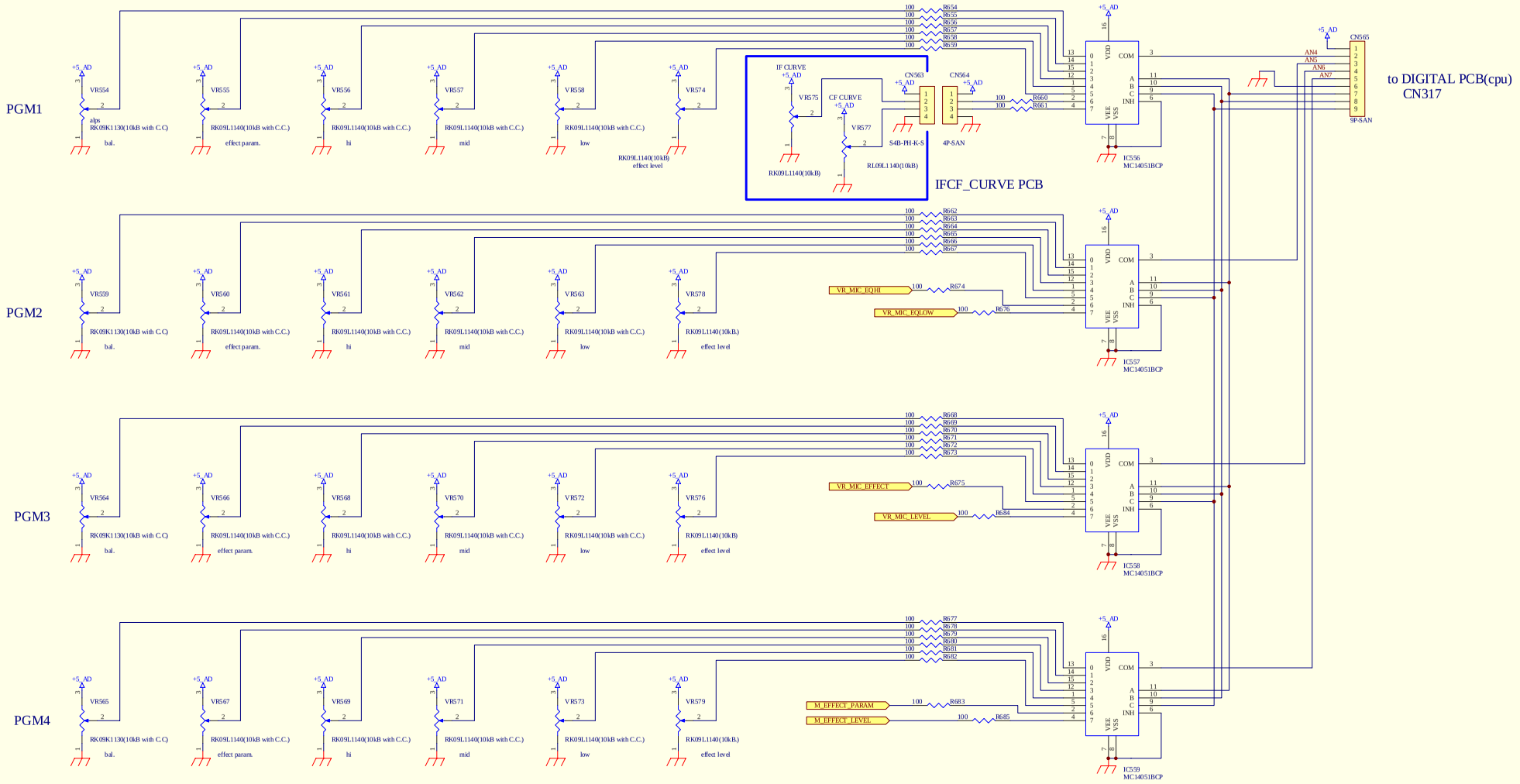

Model	PMC-580 prototype
Sheet	pmc580_panel (vr)
YANO CIRCUIT LABO	
5-Oct-2007	4 / 5

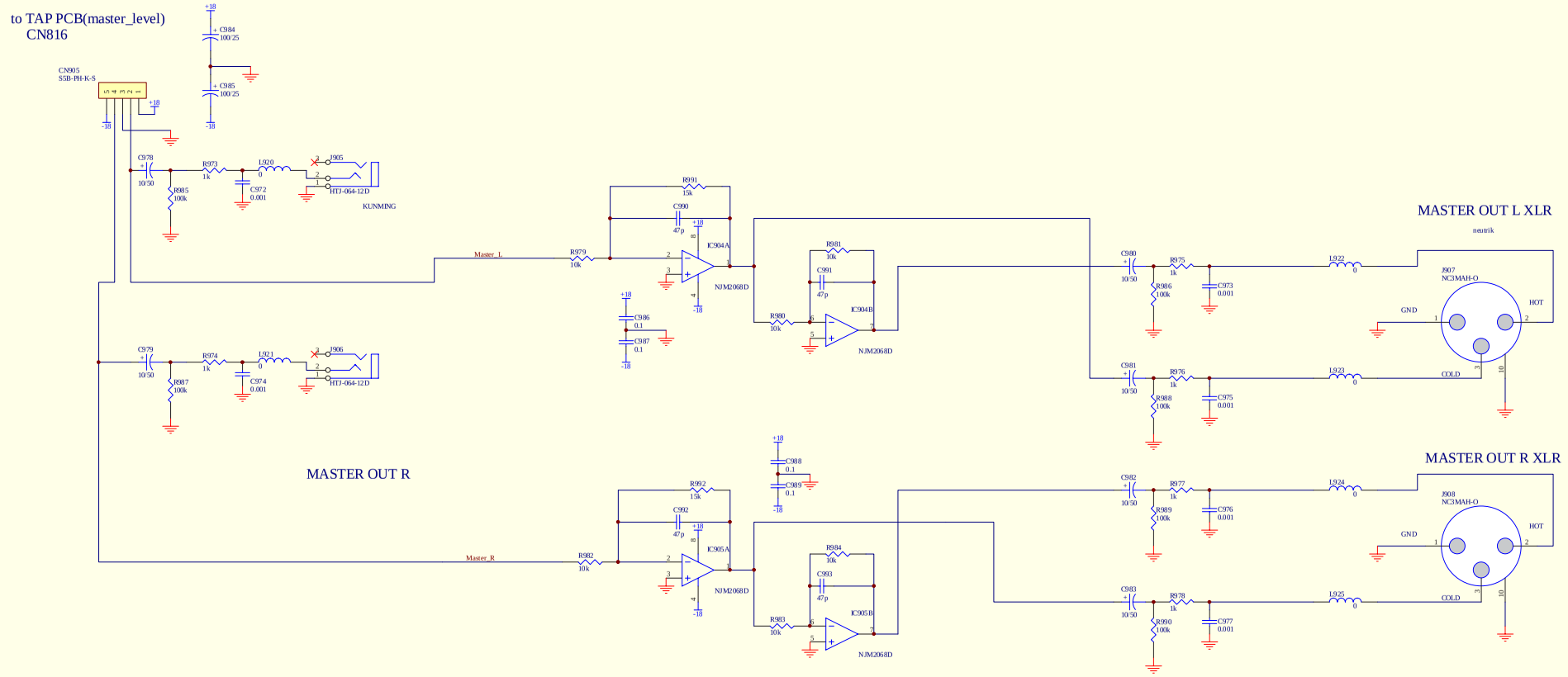

Model	PMC-580 prototype
Sheet	pmc580_io(master)
YANO CIRCUIT LABO	
5-Oct-2007	4 / 4

900-999(C993)

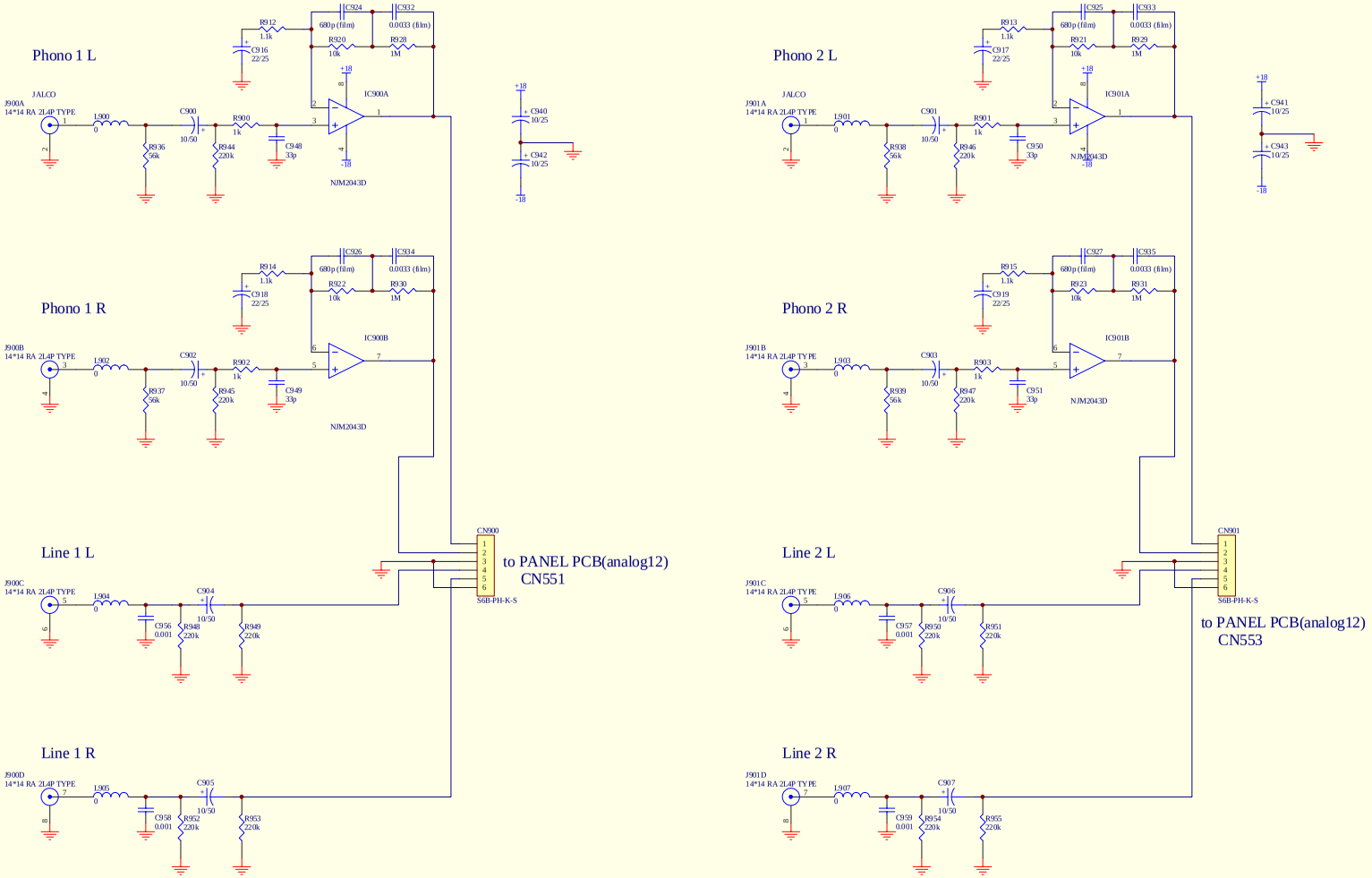

Model	PMC-580 prototype
Sheet	pmc580_io(phono_line12)
YANO CIRCUIT LABO	
5-Oct-2007	1 / 4

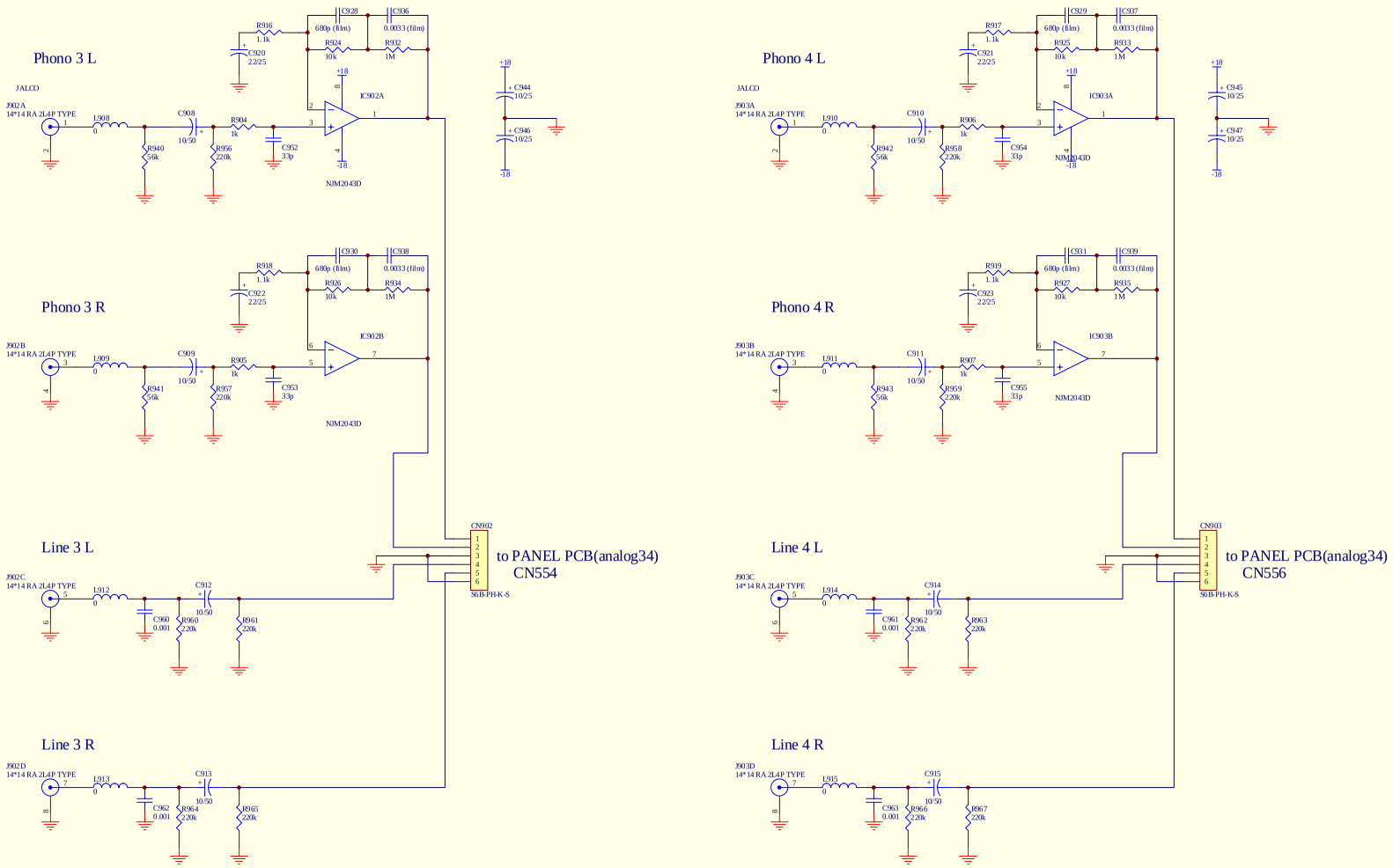

Model	PMC-580 prototype
Sheet	pmc580_io(phono_line34)
YANO CIRCUIT LABO	
5-Oct-2007	2 / 4

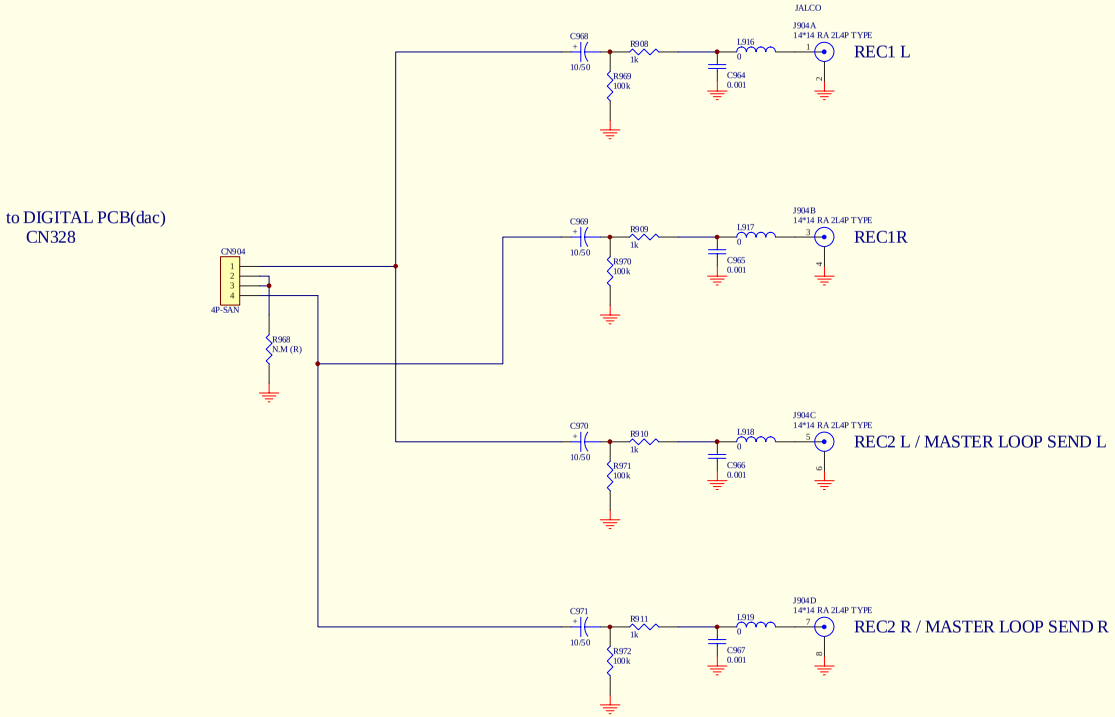

Model	PMC-580 prototype
Sheet	pmc580_io(rec_out)
YANO CIRCUIT LABO	
5-Oct-2007	3 / 4

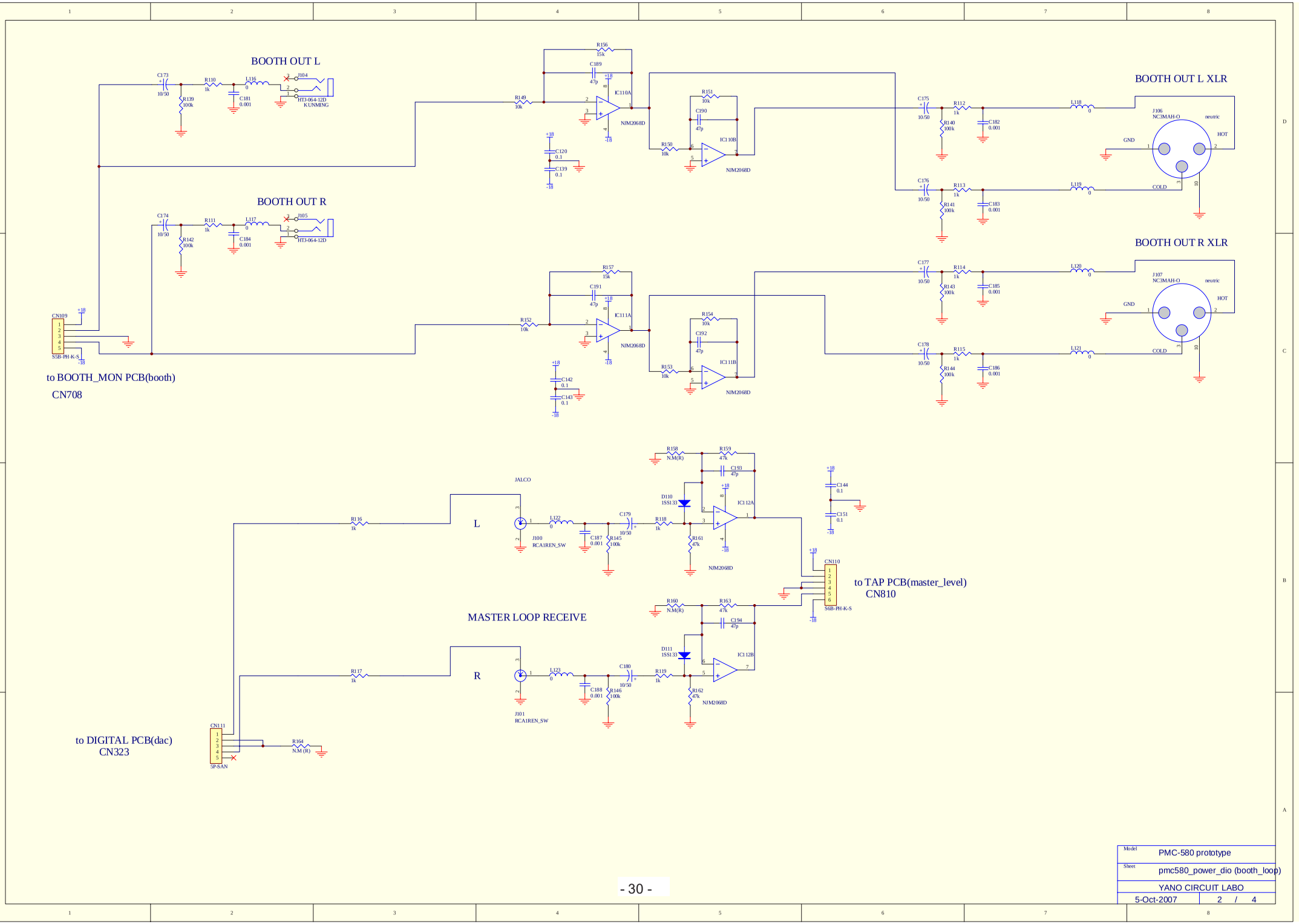

Model	PMC-580 prototype
Sheet	pmc580_power_dio (booth_loop)
YANO CIRCUIT LABO	
5-Oct-2007	2 / 4

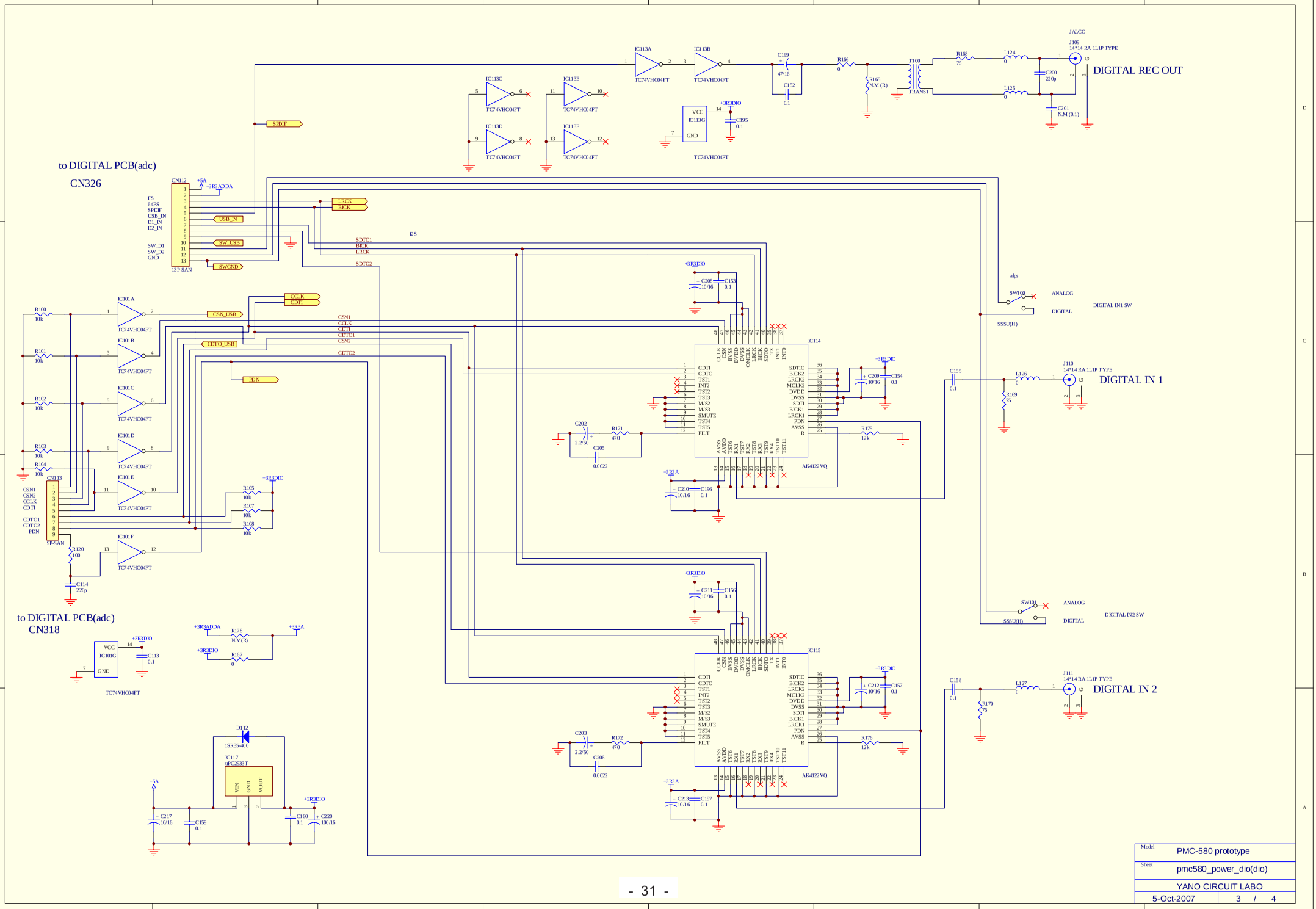

Model	PMC-580 prototype
Sheet	pmc580_power_dio(dio)
YANO CIRCUIT LABO	
5-Oct-2007	3 / 4

100-249(C226)

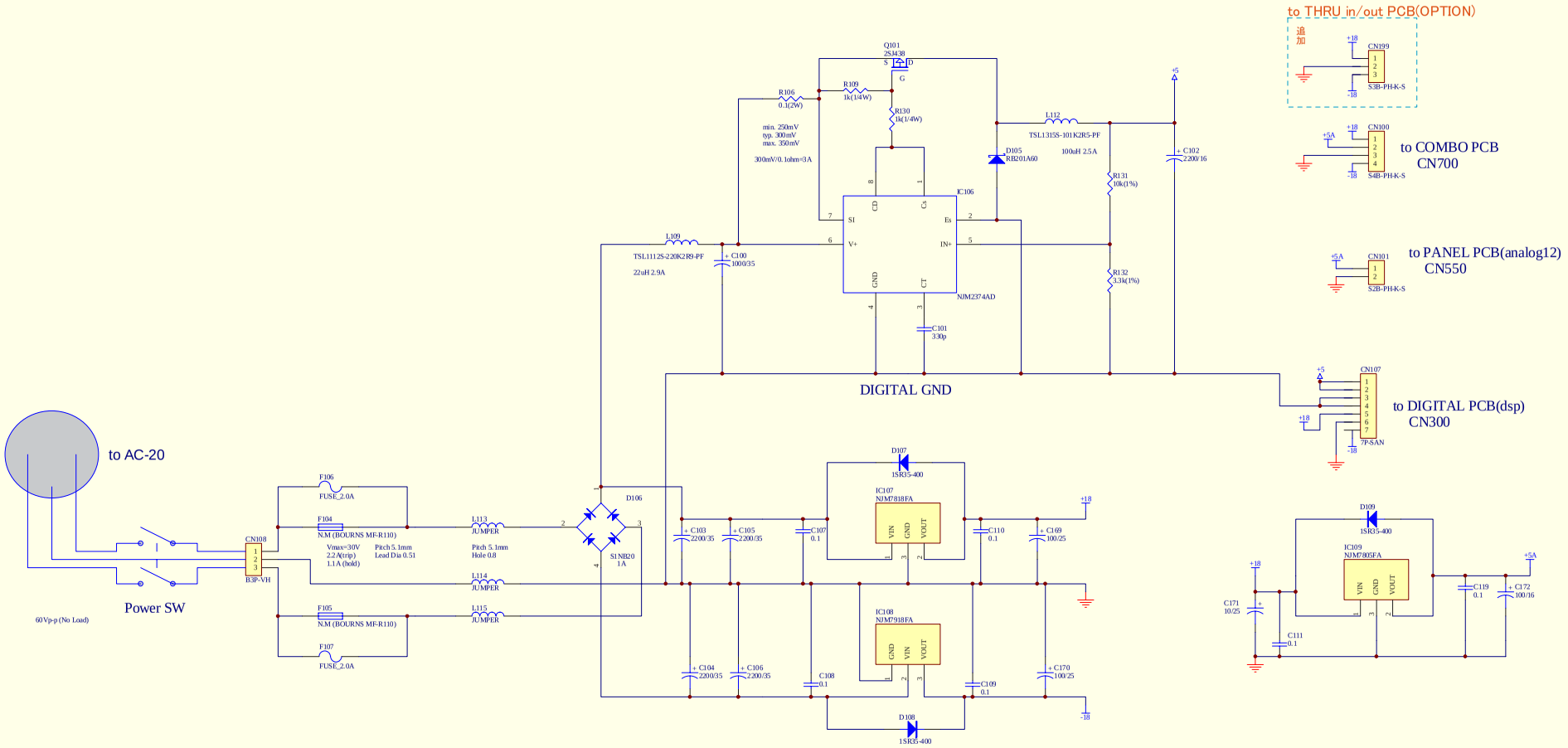

Model	PMC-580 prototype
Sheet	pmc580_power_dio(power)
YANO CIRCUIT LABO	
5-Oct-2007	1 / 4

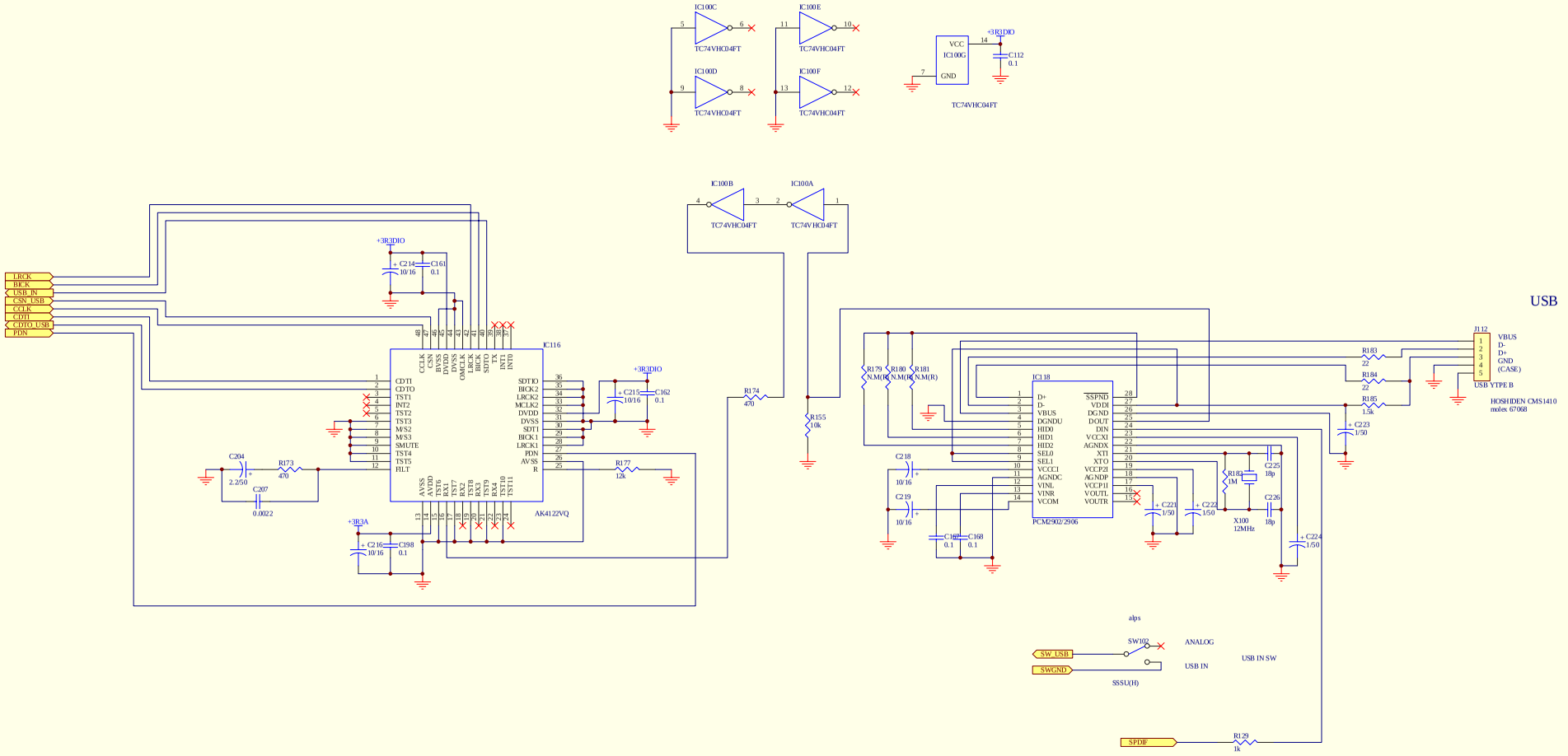

Model	PMC-580 prototype
Sheet	pmc580_power_dio(usb)
YANO CIRCUIT LABO	
5-Oct-2007	4 / 4

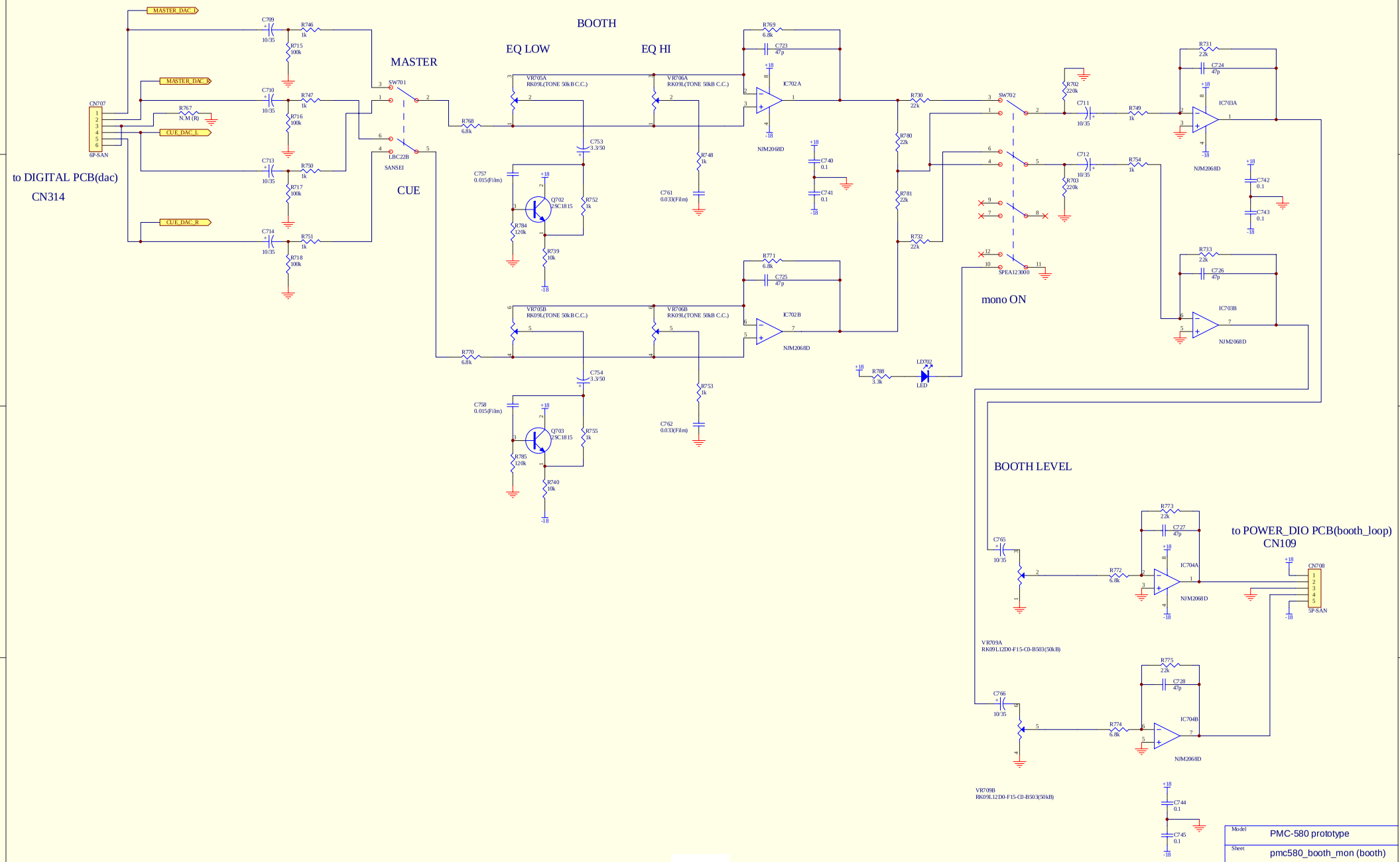

Model	PMC-580 prototype
Sheet	pmc580_booth_mon (booth)
YANO CIRCUIT LABO	
5-Oct-2007	3 / 4

700-809

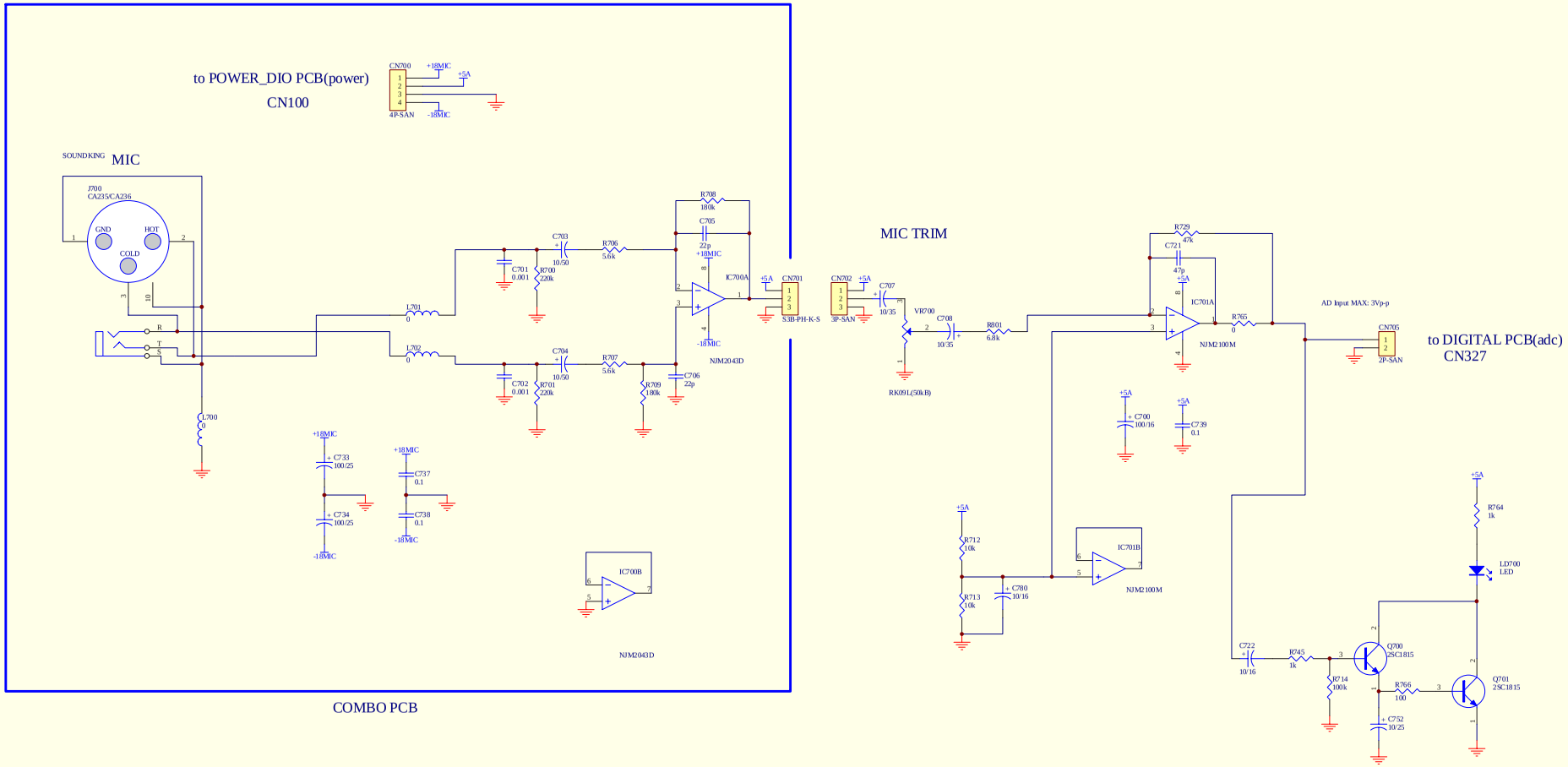

COMBO PCB

Model	PMC-580 prototype
Sheet	pmc580_booth_mon(mic_in)
YANO CIRCUIT LABO	
5-Oct-2007	1 / 4

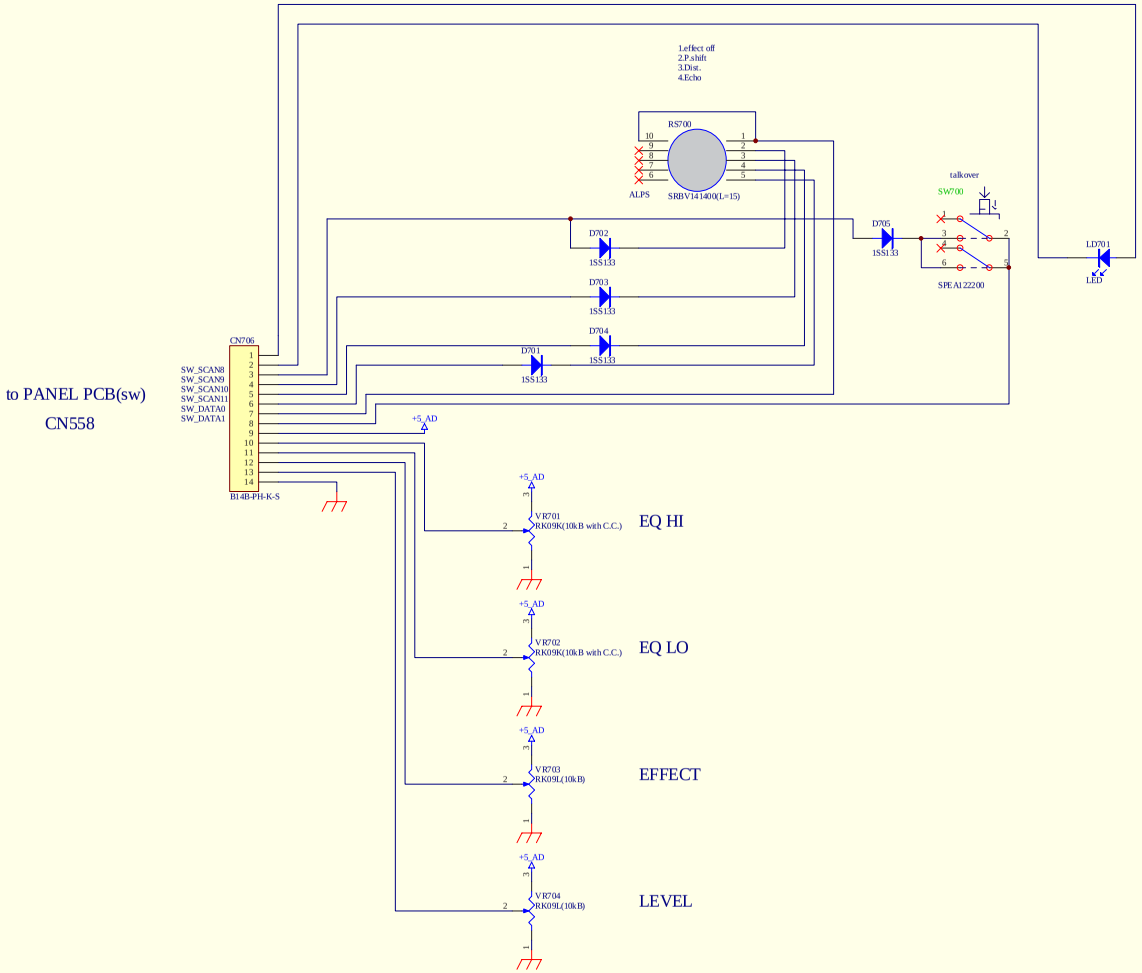

Model	PMC-580 prototype
Sheet	pmc580_booth_mon(mic_cont)
YANO CIRCUIT LABO	
5-Oct-2007	2 / 4

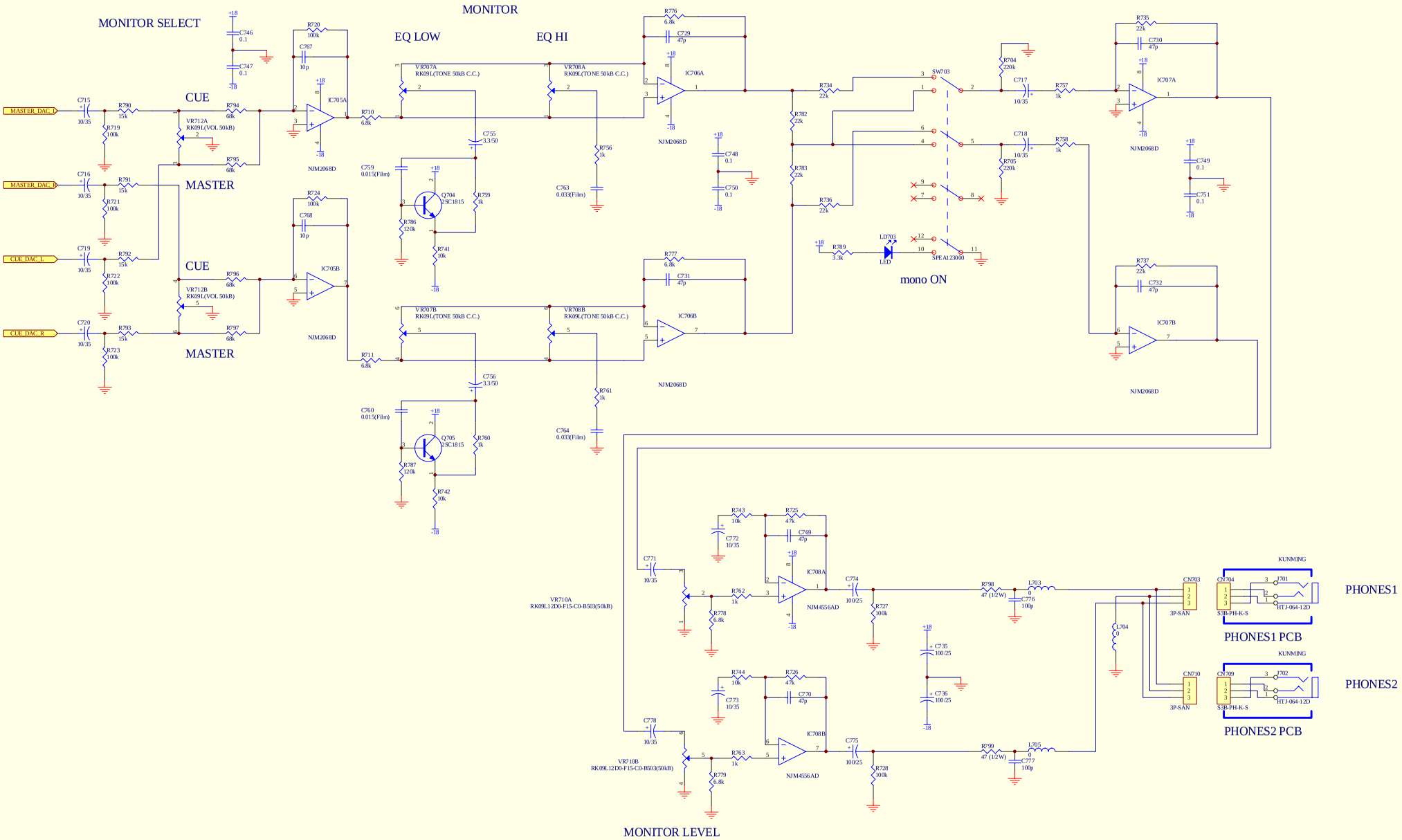

Model	PMC-580 prototype
Sheet	pmc580_booth_mon (monitor)
YANO CIRCUIT LABO	
5-Oct-2007	4 / 4

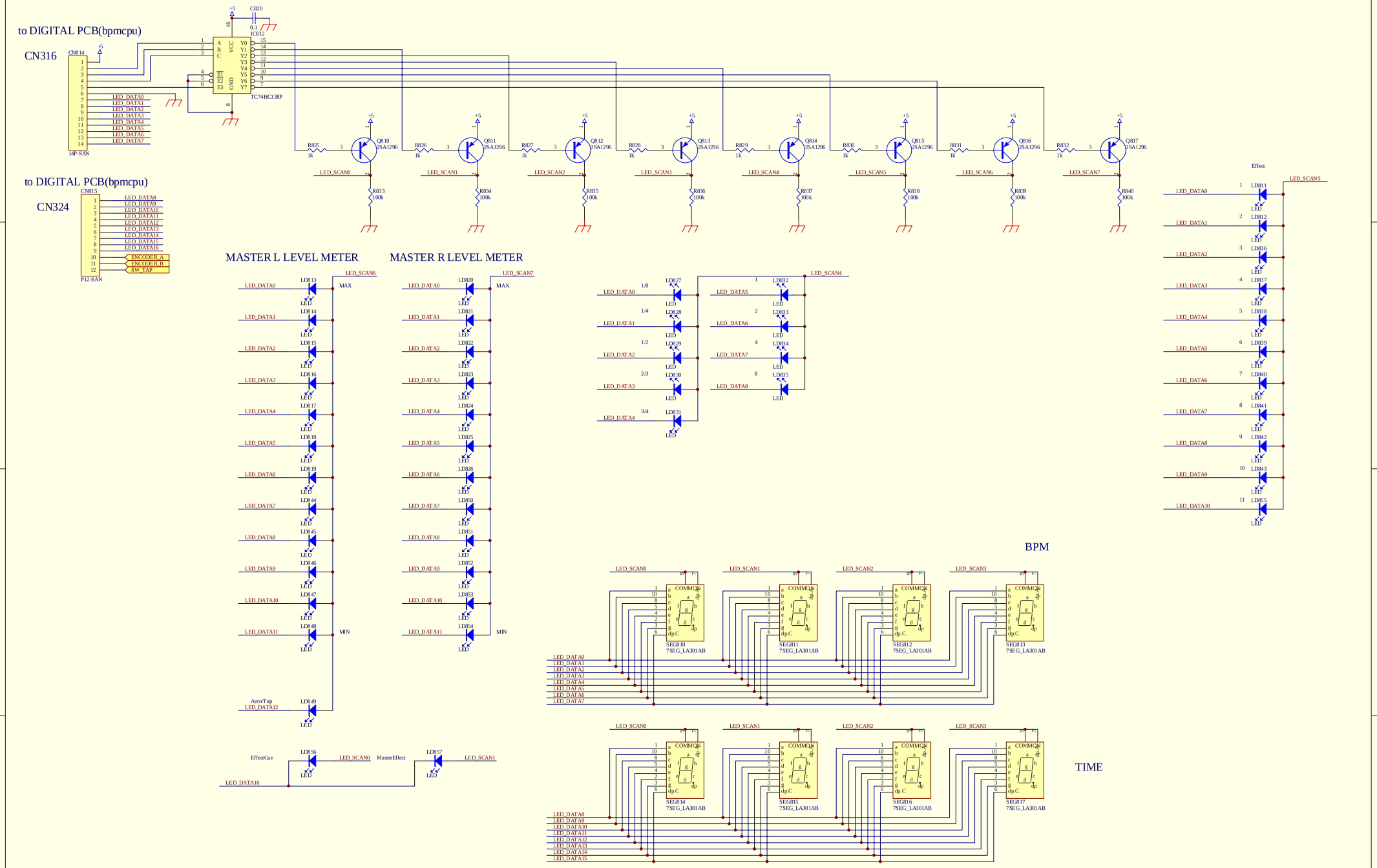

Model	PMC-580 prototype
Sheet	pmc580_tap(display)
YANO CIRCUIT LABO	
5-Oct-2007	3 / 3

810-899(LD857)

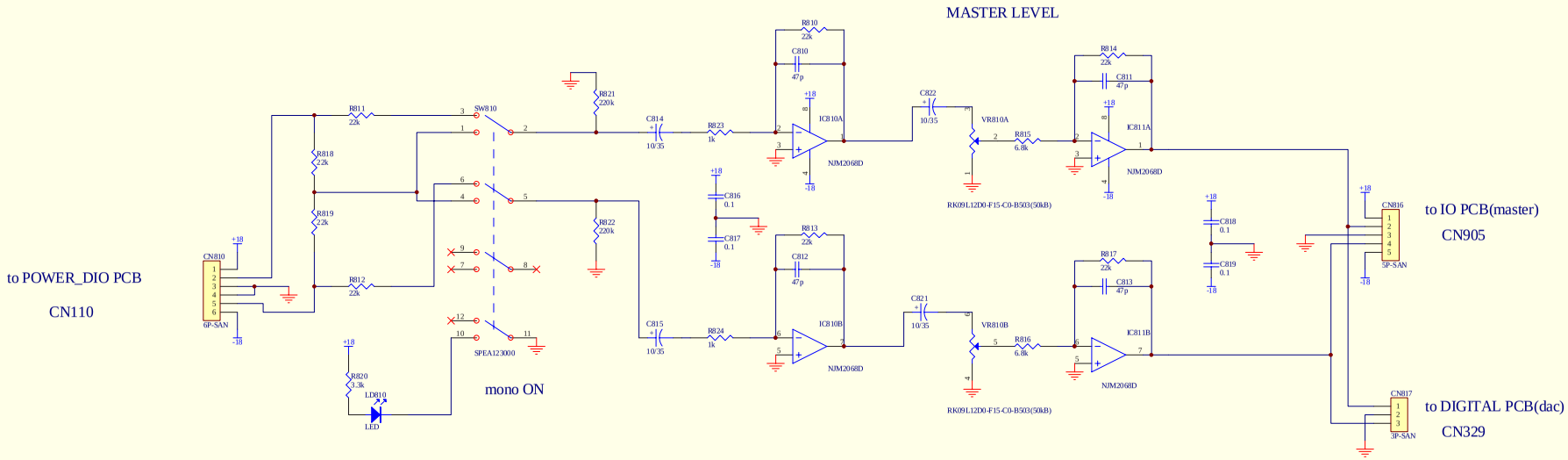

Model	PMC-580 prototype
Sheet	pmc580_tap(master_level)
YANO CIRCUIT LABO	
5-Oct-2007	1 / 3

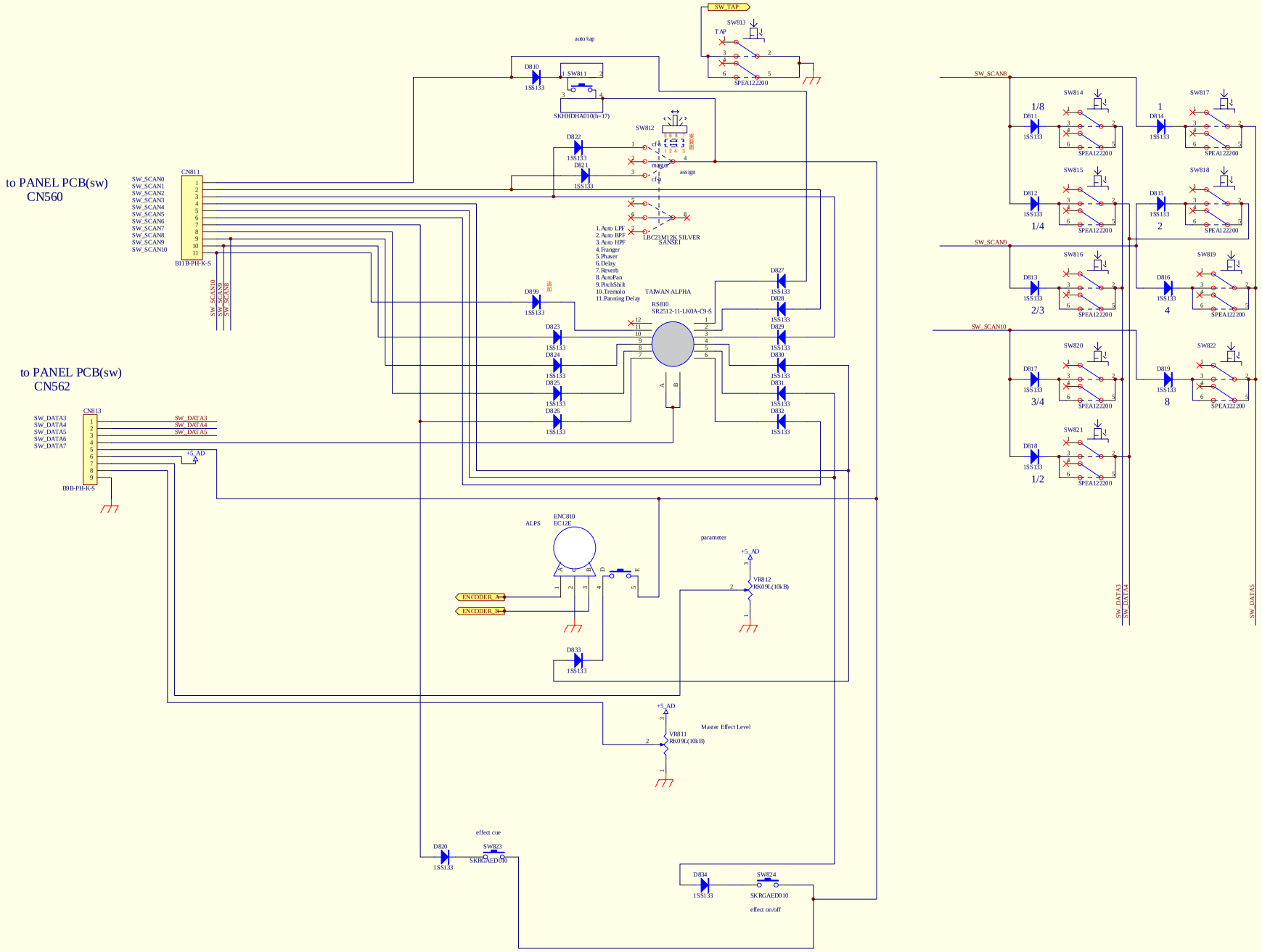

Model	PMC-580 prototype
Sheet	pmc580_tap(tap)
YANO CIRCUIT LABO	
5-Oct-2007	2 / 3

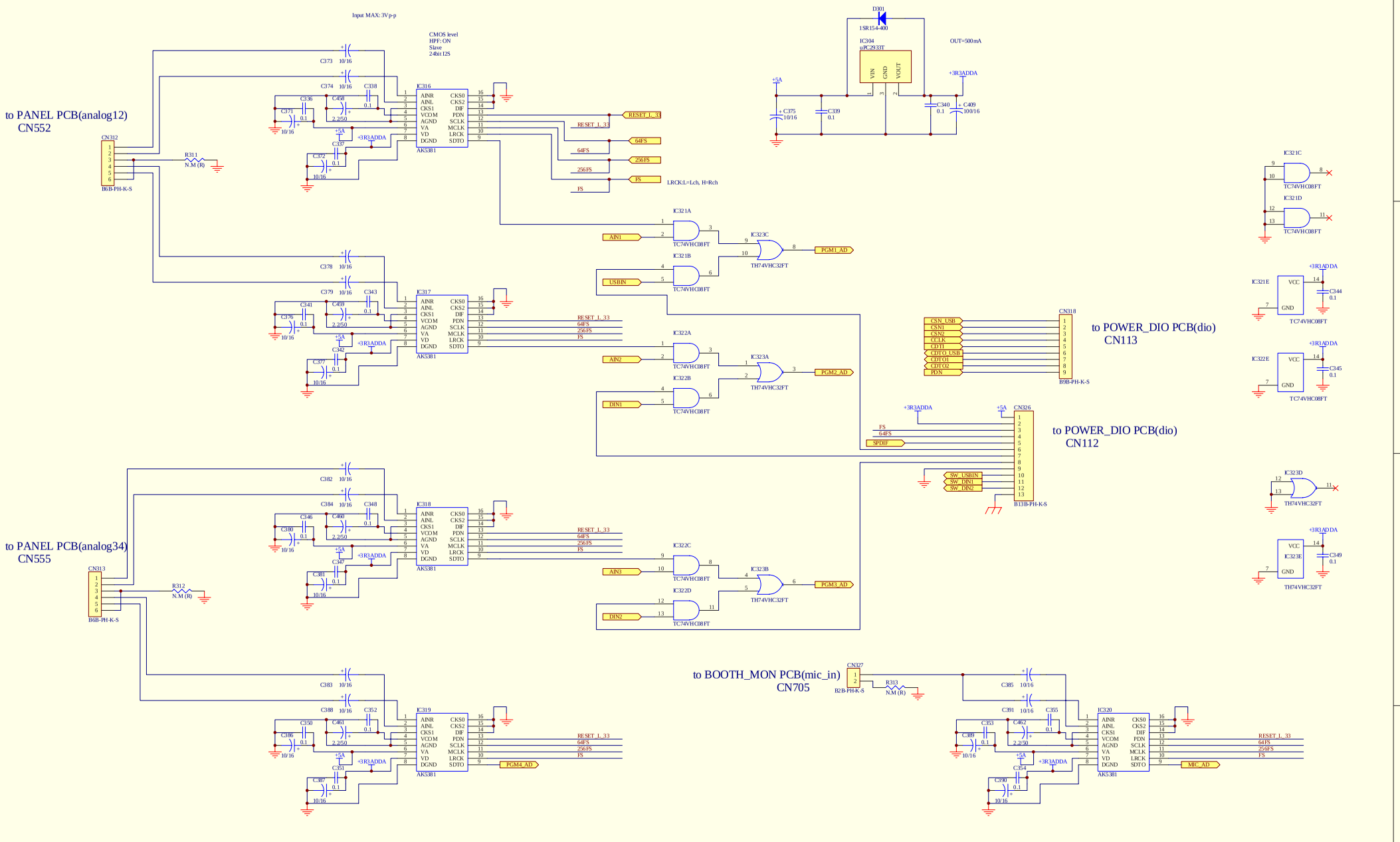

Model	PMC-580 prototype
Sheet	pmc580_digital (adc)
YANO CIRCUIT LABO	
5-Oct-2007	4 / 5

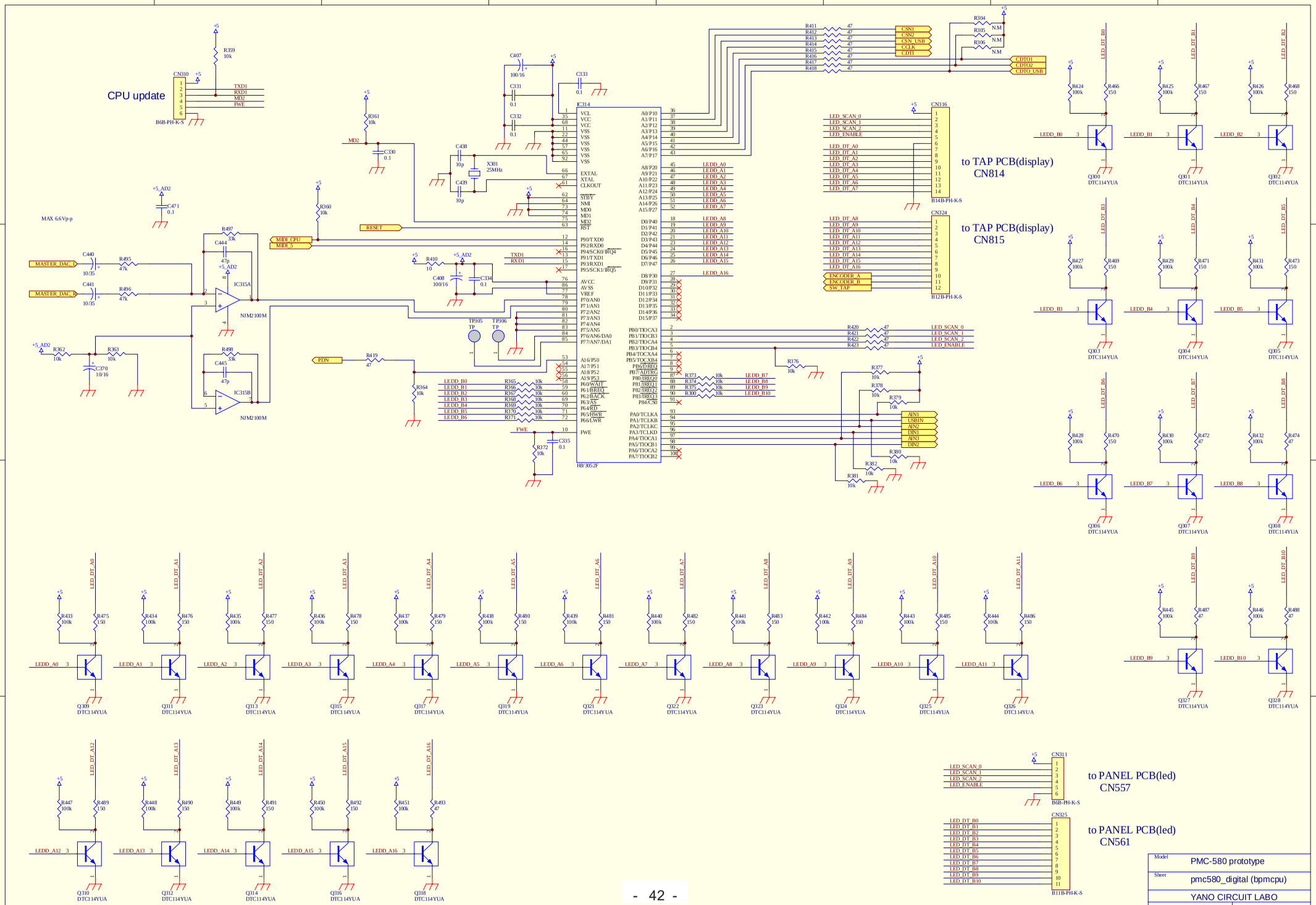
CPU update
CN310
B6B-PH-K-S
TXD1
RXD1
MD2
FWE
R359 10k
R361 10k
C330 0.1
C407 100/16
C331 0.1
C332 0.1
C333 0.1
C438 10p
C439 10p
X301 25MHz
IC314
H8/3052F
EXTAL
XTAL
CLKOUT
STBY
NMI
MD0
MD1
MD2
RST
RESET
MIDI_CPU
MIDI_5
R360 10k
+5_AD2
C471 0.1
MAX 6.6Vp-p
MASTER_DAC_L
MASTER_DAC_R
C440 10/35
C441 10/35
R495 47k
R496 47k
R497 33k
R498 33k
C444 47p
C445 47p
IC315A
IC315B
NJM2100M
R362 10k
R363 10k
C370 10/16
R410 10
C408 100/16
C334 0.1
TP305
TP306
PDN
R419 47
R364 10k
R365 10k
R366 10k
R367 10k
R368 10k
R369 10k
R370 10k
R371 10k
LEDD_B0
LEDD_B1
LEDD_B2
LEDD_B3
LEDD_B4
LEDD_B5
LEDD_B6
R372 10k
C335 0.1
R411 47
R412 47
R413 47
R414 47
R415 47
R416 47
R417 47
R418 47
CSN1
CSN2
CSN_USB
CCLK
CDT1
R304 N.M
R305 N.M
R306 N.M
CDTO1
CDTO2
CDTO_USB
CN316
B14B-PH-K-S
LED_SCAN_0
LED_SCAN_1
LED_SCAN_2
LED_ENABLE
LED_DT_A0
LED_DT_A1
LED_DT_A2
LED_DT_A3
LED_DT_A4
LED_DT_A5
LED_DT_A6
LED_DT_A7
to TAP PCB(display)
CN814
CN324
B12B-PH-K-S
LED_DT_A8
LED_DT_A9
LED_DT_A10
LED_DT_A11
LED_DT_A12
LED_DT_A13
LED_DT_A14
LED_DT_A15
LED_DT_A16
ENCODER_A
ENCODER_B
SW_TAP
to TAP PCB(display)
CN815
R420 47
R421 47
R422 47
R423 47
R376 10k
R377 10k
R378 10k
R379 10k
R380 10k
R381 10k
R382 10k
R373 10k
R374 10k
R375 10k
R300 10k
AIN1
USBIN
AIN2
DIN1
AIN3
DIN2
R424 100k
R466 150
R425 100k
R467 150
R426 100k
R468 150
R427 100k
R469 150
R429 100k
R471 150
R431 100k
R473 150
R428 100k
R470 150
R430 100k
R472 47
R432 100k
R474 47
R445 100k
R487 47
R446 100k
R488 47
Q300 DTC114YUA
Q301 DTC114YUA
Q302 DTC114YUA
Q303 DTC114YUA
Q304 DTC114YUA
Q305 DTC114YUA
Q306 DTC114YUA
Q307 DTC114YUA
Q308 DTC114YUA
Q327 DTC114YUA
Q328 DTC114YUA
R433 100k
R475 150
R434 100k
R476 150
R435 100k
R477 150
R436 100k
R478 150
R437 100k
R479 150
R438 100k
R480 150
R439 100k
R481 150
R440 100k
R482 150
R441 100k
R483 150
R442 100k
R484 150
R443 100k
R485 150
R444 100k
R486 150
Q309 DTC114YUA
Q311 DTC114YUA
Q313 DTC114YUA
Q315 DTC114YUA
Q317 DTC114YUA
Q319 DTC114YUA
Q321 DTC114YUA
Q322 DTC114YUA
Q323 DTC114YUA
Q324 DTC114YUA
Q325 DTC114YUA
Q326 DTC114YUA
R447 100k
R489 150
R448 100k
R490 150
R449 100k
R491 150
R450 100k
R492 150
R451 100k
R493 47
Q310 DTC114YUA
Q312 DTC114YUA
Q314 DTC114YUA
Q316 DTC114YUA
Q318 DTC114YUA
CN311
B6B-PH-K-S
to PANEL PCB(led)
CN557
CN325
B11B-PH-K-S
to PANEL PCB(led)
CN561
Model
PMC-580 prototype
Sheet
pmc580_digital (bpmcpu)
YANO CIRCUIT LABO
5-Oct-2007
3 / 5

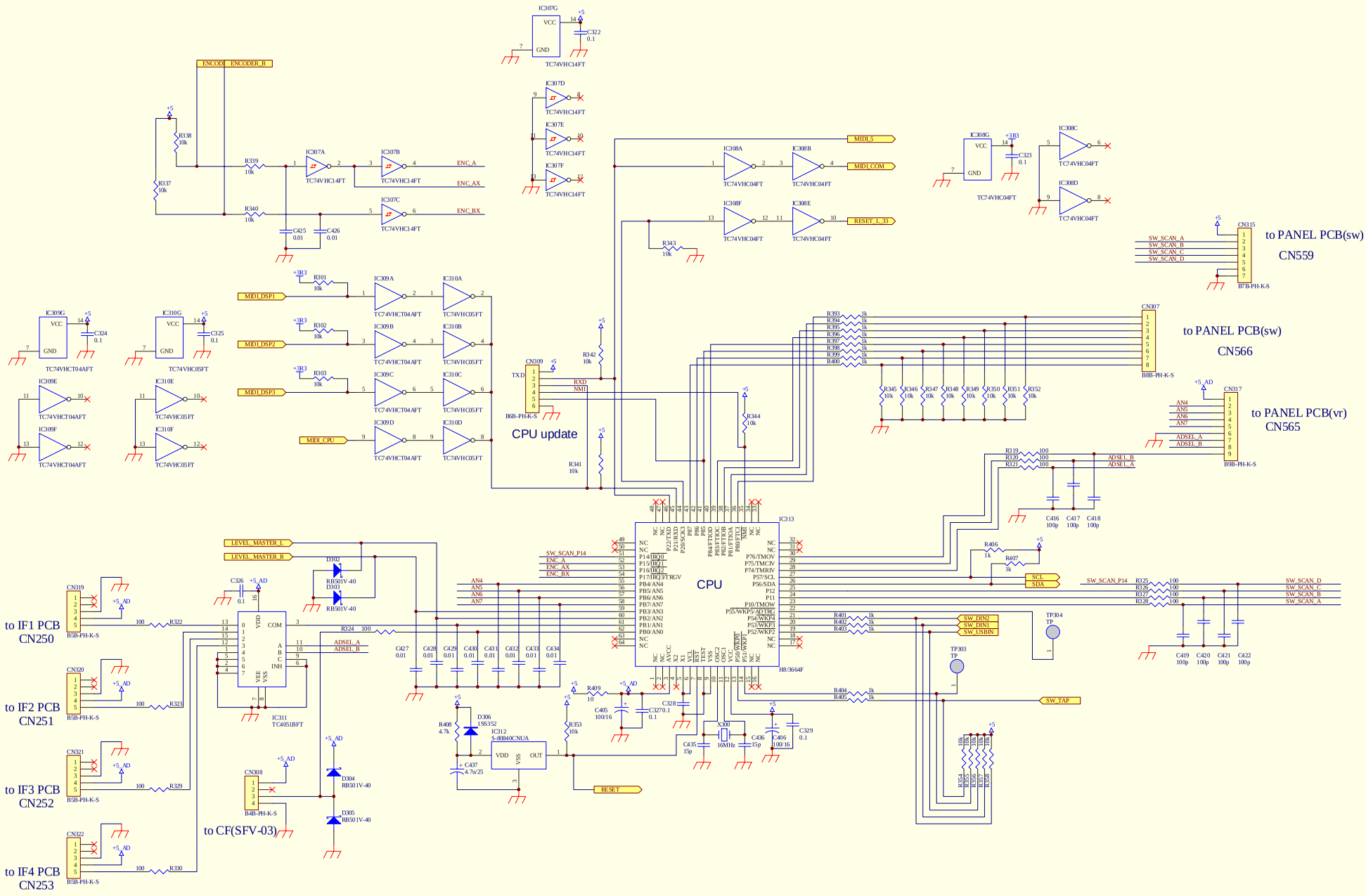

Model	PMC-580 prototype
Sheet	pmc580_digital (cpu)
YANO CIRCUIT LABO	
5-Oct-2007	2 / 5

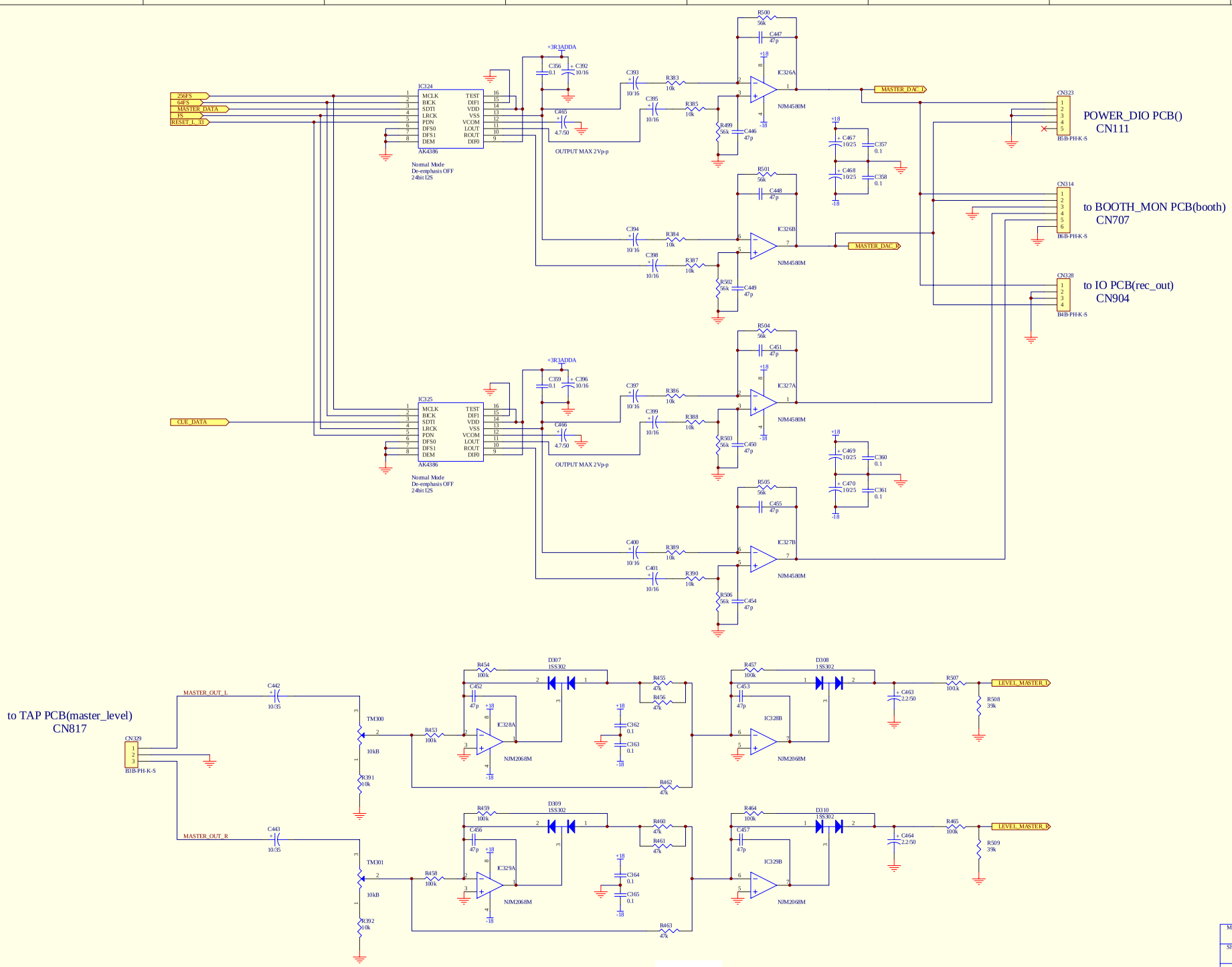

Model	PMC-580 prototype
Sheet	pmc580_digital (dac)
YANO CIRCUIT LABO	
5-Oct-2007	5 / 5

300-549(R509)

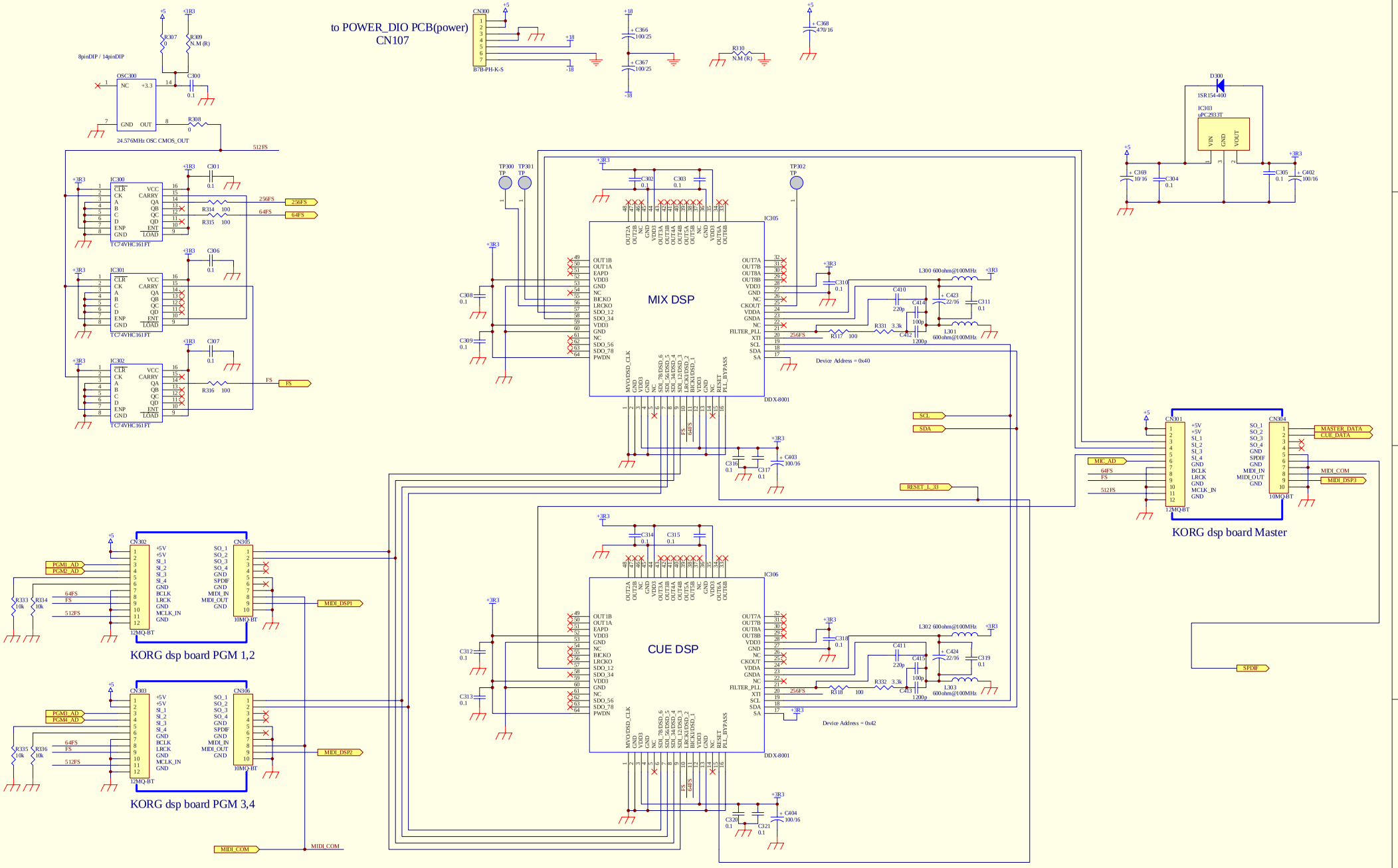

Model	PMC-580 prototype
Sheet	pcm580_digital (dsp)
YANO CIRCUIT LABO	
5-Oct-2007	1 / 5

PMC-580 parts list

no.	PCB	brand	description	arrangement number	Qty
26	TAP	ALPS	EC11E09244AW	ENC810	1
42	BOOTH MON	ALPS	RK09K1130081(RK09K1130-K20-C1-B103)	VR705,VR706	2
30	PANEL	ALPS	RK09K1130081(RK09K1130-K20-C1-B103)	VR564,VR565,VR554,VR559	4
32	PANEL	ALPS	RK09K1140(RK09K1140-F15-C0-B103)	VR576,VR574,VR578,VR579	4
44	BOOTH MON	ALPS	RK09L1140(RK09L1140-F15-C0-B503)	VR700	1
43	BOOTH MON	ALPS	RK09L1140(RK09L1140-F15-C0-B103)	VR703,VR704	2
2	FRONT	ALPS	RK09L1140(RK09L1140-F15-C0-B103)	VR575,VR577	2
27	TAP	ALPS	RK09L1140(RK09L1140-F15-C0-B103)	VR811,VR812	2
31	PANEL	ALPS	RK09L1140(RK09L1140-F15-C1-B103)	VR558,VR557,VR567,VR569,VR573,VR571,VR560,VR563,VR562,VR561,VR555,VR556,VR568,	16
33	PANEL	ALPS	RK09L1240(RK09L1240-F15-C0-A104)	VR550,VR551,VR552,VR553	4
46	BOOTH MON	ALPS	RK09L1240(RK09L1240-F15-C0-B503)	VR712,VR710,VR709	3
28	TAP	ALPS	RK09L1240(RK09L1240-F15-C0-B503)	VR810	1
45	BOOTH MON	ALPS	RK09L1240(RK09L1240-F15-C1-B503)	VR702,VR701,VR707,VR708	4
30	TAP	ALPS	SKHHDHA010(□□17□	SW811	1
36	PANEL	ALPS	SKRGAED010	SW559,SW560,SW561,SW562,SW563,SW564,SW565,SW566,SW567,SW568,SW569,SW570,SW571,SW572,SW573,SW574,SW575,SW576,SW577,SW578,SW579,SW580,SW581,SW582,SW583,SW584,SW585,SW586	28
31	TAP	ALPS	SKRGAED010	SW823,SW824	2
48	BOOTH MON	ALPS	SPEA122200	SW700	1
32	TAP	ALPS	SPEA122200	SW813,SW814,SW815,SW816,SW817,SW818,SW819,SW820,SW821,SW822	10
49	BOOTH MON	ALPS	SPEA123000	SW702,SW703	2
33	TAP	ALPS	SPEA123000	SW810	1
50	BOOTH MON	ALPS	SRBV141400(L=15)	RS700	1
37	PANEL	ALPS	SSSU014800	SW590,SW591,SW592,SW593	4
38	PANEL	ALPS	SSSU012200	SW558,SW587,SW588,SW589	4
68	POWER DIO	ALPS	SSSU11400	SW100,SW101,SW102	3
47	DIGITAL	APOGEE	DDX-8001	IC305,IC306	2
5	BOOTH MON	TOUSHIN KO	1C UTCM TS 100M(10/16)4□7	C722,C780	2
8	BOOTH MON	TOUSHIN KO	1C UTCM TS 101M(100/16)6.3□7	C700	2
6	BOOTH MON	TOUSHIN KO	1E UTCM TS 100M(10/25)5□7	C752	1
5	COMBO	TOUSHIN KO	1E UTCM TS 101M(100/25)8□7	C733,C734	2
9	BOOTH MON	TOUSHIN KO	1E UTCM TS 101M(100/25)8□7	C735,C736	2
7	BOOTH MON	TOUSHIN KO	1V UTCM TS 100M(10/35)5□7	C765,C766,C709,C710,C711,C712,C713,C714,C707,C708,C715,C716,C717,C718,C719,C72	20
4	COMBO	TOUSHIN KO	1H UTCM TS 100M□10/50□6.3□7	C703,C704	2
11	BOOTH MON	TOUSHIN KO	1H UTCM TS 3R3M(3.3/50)4□7	C753,C754,C755,C756	4
9	DIGITAL	TOUSHIN KO	1C UTCX TS 100M (10/16□4□5	C371,C372,C373,C374,C375,C376,C377,C378,C379,C380,C381,C382,C383,C384,C385,C386,C387,C388,C389,C390,C391,C370,C392,C393,C394,C395,C396,C397,C398,C399,C400,C401,C369	33
12	DIGITAL	TOUSHIN KO	1C UTCX TS 101M(100/16)8□5	C409,C407,C408,C405,C406,C402,C403,C404	8
15	DIGITAL	TOUSHIN KO	1C UTCX TS 220M (22/16)5□5	C423,C424	2
10	DIGITAL	TOUSHIN KO	1E UTCX TS 100M(10/25)5□5	C467,C468,C469,C470	4
13	DIGITAL	TOUSHIN KO	1E UTCX TS 101M(100/25)8□5	C366,C367	2

16	DIGITAL	TOUSHIN KO	1E UTCX TS 4R7M(4.7/25)4□5	C437	1
11	DIGITAL	TOUSHIN KO	1V UTCX TS 100M(10/35)5□5	C440,C441,C442,C443	4
14	DIGITAL	TOUSHIN KO	1H UTCX TS 2R2M (2.2/50)4□5	C458,C459,C460,C461,C462,C463,C464	7
17	DIGITAL	TOUSHIN KO	1H UTCX TS 4R7M(4.7/50)5□5	C465,C466	2
9	POWER DIO	TOUSHIN KO	1C UTES TS 100M(10/16)5□11	C208,C209,C210,C211,C212,C213,C217,C214,C215,C216,C218,C219	12
4	PANEL	TOUSHIN KO	1C UTES TS 101M□100/16□5□11	C587	1
12	POWER DIO	TOUSHIN KO	1C UTES TS 101M□100/16□5□11	C220,C172	2
18	POWER DIO	TOUSHIN KO	1C UTES TS 470M(47/16)5□11	C199	1
18	DIGITAL	TOUSHIN KO	1C UTES TS 471M(470/16)8□11.5	C368	1
5	IO PCB	TOUSHIN KO	1E UTES TS 100M□10/25□5□11	C940,C941,C942,C943,C944,C945,C946,C947	8
10	POWER DIO	TOUSHIN KO	1E UTES TS 100M□10/25□5□11	C171	1
7	IO PCB	TOUSHIN KO	1E UTES TS 101M□100/25□6.3□11	C984,C985	2
13	POWER DIO	TOUSHIN KO	1E UTES TS 101M□100/25□6.3□11	C169,C170	2
8	IO PCB	TOUSHIN KO	1E UTES TS 220M□22/25□5□11	C916,C917,C918,C919,C920,C921,C922,C923	8
3	PANEL	TOUSHIN KO	1V UTES TS 100M□10/35□5□11	C550,C551,C552,C553,C554,C555,C556,C557,C558,C559,C560,C561,C562,C563,C564,C56	16
14	POWER DIO	TOUSHIN KO	1V UTES TS 102M(1000/35)12.5□20	C100	1
8	POWER DIO	TOUSHIN KO	1H UTES TS 010M□1/50□5□11	C221,C222,C223,C224	4
6	IO PCB	TOUSHIN KO	1H UTES TS 100M□10/50)5□11	C978,C979,C980,C981,C982,C983,C900,C901,C902,C903,C904,C905,C906,C907,C908,C909,C910,C911,C912,C913,C914,C915,C968,C9	26
11	POWER DIO	TOUSHIN KO	1H UTES TS 100M□10/50)5□11	C173,C174,C175,C176,C177,C178,C179,C180	8
15	POWER DIO	TOUSHIN KO	1H UTES TS 2R2M(2.2/50)5□11	C202,C203,C204	3
16	POWER DIO	TOUSHIN KO	1C UTWE TS 222M(2200/16)(105□□12.5	C102	1
17	POWER DIO	TOUSHIN KO	1V UTWE TS 222M(2200/35)(105□□16□	C103,C104,C105,C106	4
32	POWER DIO	EMUDEN	H0446□	F106,F107	2
25	IO PCB	JALCO	YKC21-4085V	J900,J901,J902,J903,J904	5
65	POWER DIO	JALCO	YLC21-3034V	J100,J101	2
□□	POWER DIO	JALCO	YKC21-3486N=> VESTAX 6/20)	J109,J110,J111	3
8	COMBO	JRC	NJM2043D-□ZZZB□DIP8	IC700	1
14	IO PCB	JRC	NJM2043D-□ZZZB□DIP8	IC900,IC901,IC902,IC903	4
20	BOOTH MON	JRC	NJM2068D-□ZZZB DIP8	IC702,IC703,IC704,IC705,IC706,IC707	6
15	IO PCB	JRC	NJM2068D-□ZZZB DIP8	IC904,IC905	2
36	POWER DIO	JRC	NJM2068D-□ZZZB DIP8	IC110,IC111,IC112	3
12	TAP	JRC	NJM2068D-□ZZZB DIP8	IC810,IC811	2
50	DIGITAL	JRC	NJM2068M-TE1	IC328,IC329	2
21	BOOTH MON	JRC	NJM2100D-□ZZZB DIP8	IC701	1
16	PANEL	JRC	NJM2100D-□ZZZB□DIP8	IC550,IC551,IC552,IC553	4
51	DIGITAL	JRC	NJM2100M-TE1	IC315	1
37	POWER DIO	JRC	NJM2374AD-□ZZZB	IC106	1
22	BOOTH MON	JRC	NJM4556AD□DIP8	IC708	1
52	DIGITAL	JRC	NJM4580M-TE1	IC326,IC327	2
38	POWER DIO	JRC	NJM7805FA-□ZZZB TO-220	IC109	1
39	POWER DIO	JRC	NJM7818FA-□ZZZB TO-220	IC107	1
40	POWER DIO	JRC	NJM7918FA-□ZZZB TO-220	IC108	1
19	DIGITAL	JST	10M@-BT□L0T=250	CN304,CN305,CN306	3
20	DIGITAL	JST	12M@-BT□L0T=250	CN301,CN302,CN303	3
11	PANEL	JST	B11B-PH-K-S□LF)(SN)	CN560	1
9	TAP	JST	B11B-PH-K-S□LF)(SN)	CN811	1

28	DIGITAL	JST	B11B-PH-K-S□LF)(SN)	CN325	1
29	DIGITAL	JST	B12B-PH-K-S□LF(SN)	CN324	1
30	DIGITAL	JST	B13B-PH-K-S□LF)(SN)	CN326	1
18	BOOTH MON	JST	B14B-PH-K-S□LF)(SN)	CN706	1
12	PANEL	JST	B14B-PH-K-S□LF)(SN)	CN558	1
31	DIGITAL	JST	B14B-PH-K-S□LF)(SN)	CN316	1
21	DIGITAL	JST	B2B-PH-K-S□LF)(SN)	CN327	1
22	DIGITAL	JST	B3B-PH-K-S□LF)(SN)	CN329	1
23	POWER DIO	JST	B3P-VH□LF)(SN)	CN108	1
23	DIGITAL	JST	B4B-PH-K-S□LF)(SN)	CN308,CN328	2
24	DIGITAL	JST	B5B-PH-K-S□LF)(SN)	CN319,CN320,CN321,CN322,CN323	5
25	DIGITAL	JST	B6B-PH-K-S□LF)(SN)	CN312,CN313,CN310,CN311,CN309,CN314	6
26	DIGITAL	JST	B7B-PH-K-S□LF)(SN)	CN300,CN315	2
additional	DIGITAL	JST	B8B-PH-K-S LF)(SN)	CN307□□	1
10	TAP	JST	B9B-PH-K-S□LF)(SN)	CN813	1
27	DIGITAL	JST	B9B-PH-K-S□LF)(SN)	CN317,CN318	2
13	PANEL	JST	B9B-PH-K-S□LF)(SN)	CN562	1
24	POWER DIO	JST	S2B-PH-K-S□LF)(SN)	CN101	1
7	COMBO	JST	S3B-PH-K-S□LF)(SN)	CN701	1
	Monitor_jack PCB	JST	S3B-PH-K-S□LF)(SN)	CN709,CN704	2
1	FRONT	JST	S4B-PH-K-S□LF)(SN)	CN563	1
25	POWER DIO	JST	S4B-PH-K-S□LF)(SN)	CN100	1
1	IF.CF	JST	S5B-PH-K-S□LF)(SN)	CN250,CN251,CN252,CN253	4
12	IO PCB	JST	S5B-PH-K-S□LF)(SN)	CN905	1
26	POWER DIO	JST	S5B-PH-K-S□LF)(SN)	CN109	1
13	IO PCB	JST	S6B-PH-K-S□LF)(SN)	CN900,CN901,CN902,CN903	4
27	POWER DIO	JST	S6B-PH-K-S□LF)(SN)	CN110	1
74	DIGITAL	KOA	KVSF637TC103(KOA)/RH063MC14R(ALPS)	TM300,TM301	2
26	IO PCB	KUMMING	HTJ-064-12D	J905,J906	2
	Monitor_jack PCB	KUMMING	HTJ-064-12D	J701,J702	2
66	POWER DIO	KUMMING	HTJ-064-12D	J104,J105	2
20	PANEL	LED	5□□□LED(□□□□□□□□□□□□	(LD582,LD583,LD584,LD585,LD586) (LD575,LD576,LD577,LD578,LD579) (LD589,LD590,LD591,LD592,LD593) (LD596,LD597,LD598,LD599,LD600)	4
14	TAP	LED	5□□□LED(□□□□□□□□□□□□	(LD844,LD845,LD846,LD847,LD848) (LD850,LD851,LD852,LD853,LD854)	2
19	PANEL	LED	7□□□LED(□□□□□□□□□□□□□	(LD551,LD552,LD553,LD554,LD555,LD573,LD574) (LD557,LD558,LD559,LD560,LD561,LD580,LD581) (LD563,LD564,LD565,LD566,LD567,LD582,LD	4
13	TAP	LED	7□□□LED(□□□□□□□□□□□□□	(LD813,LD814,LD815,LD816,LD817,LD818,LD819)	2
42	POWER DIO	NEC	UPC2933T□E1-AZ / uPC2933AT	IC117	1
55	DIGITAL	NEC	UPC2933T□E1-AZ / uPC2933AT	IC303,IC304	2
12	BOOTH MON	NISSEI	AMZ50K153□0.015□	C757,C758,C759,C760	4
9	IO PCB	NISSEI	AMZ50K332□0.0033□	C932,C933,C934,C935,C936,C937,C938,C939	8
13	BOOTH MON	NISSEI	AMZ50K333□0.033□	C762,C761,C763,C764	4
10	IO PCB	NISSEI	AMZ50K681	C924,C925,C926,C927,C928,C929,C930,C931	8
32	DIGITAL	OMCG	SM-49-4 16MHZ□AT-51CD2□16MHZ□	X300	1
33	DIGITAL	OMCG	SM-49-4 25MHZ(AT-51CD2 25MHZ□	X301	1

13	COMBO	SOUNDKING	CA235/CA236□10P)	J700	1
2	IF.CF	taiwan alp	RA60D1F-220-15C1-B10K-0051	VR250,VR251,VR252,VR253	4
34	TAP	taiwan alp	SR2512-11-LK0A-C9-S-264	RS810	1
45	POWER DIO	TDK	TSL1112S-220K2R9-PF	L109	1
46	POWER DIO	TDK	TSL1315S-101K2R5-PF	L112	1
2	BOOTH MON	MARUHA	□RT)HE40TKYB101K(100P)	C776,C777	2
2	PANEL	MARUHA	□RT)HE40TKYB101K(100P)	C588,C589,C590,C591,C592,C593,C594,C595,C596,C597,C598,C599	12
3	BOOTH MON	MARUHA	□RT)HE40TKYB100D(10P)	C767,C768	2
4	POWER DIO	MARUHA	(RT)HE40TKSL180J(18P)	C225,C226	2
5	POWER DIO	MARUHA	(RT□HE40TKYB221K(220P)	C200	1
3	COMBO	MARUHA	(RT)HE40TKSL220J(22P)	C705,C706	2
6	POWER DIO	MARUHA	(RT□HE40TKYB331K(330P)	C101	1
3	IO PCB	MARUHA	(RT)HE40TKSL330J(33P)	C948,C949,C950,C951,C952,C953,C954,C955	8
4	BOOTH MON	MARUHA	(RT□HE40(SK)SL470J(47P)□	C723,C724,C725,C726,C727,C728,C729,C730,C731,C732,C721,C769,C770	13
4	IO PCB	MARUHA	(RT□HE40(SK)SL470J(47P)□	C990,C991,C992,C993	4
7	POWER DIO	MARUHA	(RT□HE40(SK)SL470J(47P)□	C189,C190,C191,C192,C193,C194	6
2	TAP	MARUHA	(RT□HE40(SK)SL470J(47P)□	C810,C811,C812,C813	4
2	POWER DIO	MARUHA	CK45F1H222ZYA(0.0022UF)□□	C205,C206,C207	3
26	BOOTH MON	TDO	RD16S 0Ω	R765	1
23	PANEL	TDO	RD16S 0Ω	R634,R635,R636,R637,R638,R639,R640,R641	8
47	POWER DIO	TDO	RD16S 0Ω	R166,R167	2
17	IO PCB	TDO	RD16S 1.1KΩ□□□1.2K)	R912,R913,R914,R915,R916,R917,R918,R919	8
49	POWER DIO	TDO	RD16S 1.5K	R185	1
28	BOOTH MON	TDO	RD16S 100KΩ	R715,R716,R717,R718,R710,R711,R712,R713,R714,R719,R720,R721,R722,R723,R724,R72	17
18	IO PCB	TDO	RD16S 100KΩ	R985,R986,R987,R988,R989,R990,R969,R970	10
25	PANEL	TDO	RD16S 100KΩ	R590,R591,R592,R593,R594,R595,R596,R597,R598,R599,R600,R601,R602,R603,R604,R605,R606,R607,R608,R609,R610,R611,R612,R613	24
50	POWER DIO	TDO	RD16S 100KΩ	R139,R140,R141,R142,R143,R144,R145,R146	8
18	TAP	TDO	RD16S 100KΩ	R833,R834,R835,R836,R837,R838,R839,R840	8
27	BOOTH MON	TDO	RD16S 100Ω	R766	1
24	PANEL	TDO	RD16S 100Ω	R642,R643,R644,R645,R646,R647,R648,R649,R650,R651,R652,R653,R654,R655,R656,R657,R658,R659,R660,R661,R662,R663,R664,R665,R666,R667,R668,R669,R670,R671,R672,R673,R674,R675,R676,R677,R678,R679,R680,R681,R682,R683,R684,R685	44
29	BOOTH MON	TDO	RD16S 10KΩ	R739,R740,R741,R742,R743,R744	6
19	IO PCB	TDO	RD16S 10KΩ	R979,R980,R981,R982,R983,R984,R920,R921,R922,R923,R924,R925,R926,R927	14
51	POWER DIO	TDO	RD16S 10KΩ	R149,R150,R151,R152,R153,R154,R155,R100,R101,R102,R103,R104,R105,R107,R108	15
30	BOOTH MON	TDO	RD16S 120KΩ	R784,R785,R786,R787	4
31	BOOTH MON	TDO	RD16S 12KΩ		0
53	POWER DIO	TDO	RD16S 12KΩ	R175,R176,R177	3
19	TAP	TDO	RD16S 12KΩ	R818,R819	2
32	BOOTH MON	TDO	RD16S 15KΩ	R790,R791,R792,R793	4
20	IO PCB	TDO	RD16S 15KΩ	R991,R992	2
54	POWER DIO	TDO	RD16S 15KΩ	R156,R157	2
10	COMBO	TDO	RD16S 180K	R708,R709	2

33	BOOTH MON	TDO	RD16S 1KΩ	R746,R747,R748,R749,R750,R751,R752,R753,R754,R755,R745,R764,R756,R757,R758,R75	20
21	IO PCB	TDO	RD16S 1KΩ	R973,R974,R975,R976,R977,R978,R900,R901,R902,R903,R904,R905,R906,R907,R908,R90	18
26	PANEL	TDO	RD16S 1KΩ	R558,R559,R560,R561,R562,R563,R564,R565,R566,R567,R568,R569,R686,R687,R688,R689,R570,R571,R572,R573,R574,R575,R576,R577,R578,R579,R580,R581,R690,R691,R692,R693,R582,R583,R584,R585,R586,R587,R588,	40
55	POWER DIO	TDO	RD16S 1KΩ	R110,R111,R112,R113,R114,R115,R116,R117,R118,R119,R129	11
20	TAP	TDO	RD16S 1KΩ	R825,R826,R827,R828,R829,R830,R831,R832	10
□□	POWER DIO	TDO	**RD25S 1KΩ 1/4W)**	R109,R130	2
22	IO PCB	TDO	RD16S 1M	R928,R929,R930,R931,R932,R933,R934,R935	8
56	POWER DIO	TDO	RD16S 1M	R182	1
57	POWER DIO	TDO	RD16S 22	R183,R184	2
34	BOOTH MON	TDO	RD16S 220KΩ	R702,R703,R704,R705	4
11	COMBO	TDO	RD16S 220KΩ	R700,R701	2
23	IO PCB	TDO	RD16S 220KΩ	R944,R945,R946,R947,R948,R949,R950,R951,R952,R953,R954,R955,R956,R957,R958,R959,R960,R961,R962,R963,R964,R965,R966,R967	24
27	PANEL	TDO	RD16S 220KΩ	R550,R551,R552,R553,R554,R555,R556,R557	8
21	TAP	TDO	RD16S 220KΩ	R821,R822	2
35	BOOTH MON	TDO	RD16S 22KΩ	R730,R731,R732,R733,R734,R735,R736,R737 □**R780,R781,R782,R783**	**12**
22	TAP	TDO	RD16S 22KΩ	R810,R811,R812,R813	4
36	BOOTH MON	TDO	RD16S 3.3KΩ	R788,R789	2
23	TAP	TDO	RD16S 3.3KΩ	R820	1
59	POWER DIO	TDO	RD16S 470	R171,R172,R173,R174	4
38	BOOTH MON	TDO	RD16S 47KΩ	R729	0
28	PANEL	TDO	RD16S 47KΩ	R626,R627,R628,R629,R630,R631,R632,R633	8
60	POWER DIO	TDO	RD16S 47KΩ	R158,R159,R160,R161,R162,R163	6
□□	BOOTH MON	TDO	RD16S 47KΩ	**R725,R726**	**2**
12	COMBO	TDO	RD16S 5.6K	R706,R707	2
24	IO PCB	TDO	RD16S 56K	R936,R937,R938,R939,R940,R941,R942,R943	8
39	BOOTH MON	TDO	RD16S 6.8KΩ	R768,R769,R770,R771,R772,R773,R774,R775,R776,R777,R778,R779, **R801,R729**	**14**
24	TAP	TDO	RD16S 6.8KΩ	R814,R815,R816,R817	4
40	BOOTH MON	TDO	RD16S 68K	R794,R795,R796,R797	4
61	POWER DIO	TDO	RD16S 75	R168,R169,R170	3
57	DIGITAL	TDO	TDR3GTJ000(0Ω□	R307,R308	2
58	DIGITAL	TDO	TDR3GTJ100V(10Ω□	R409,R410	2
59	DIGITAL	TDO	TDR3GTJ101V(100Ω□	R320,R321,R322,R323,R324,R325,R326,R327,R328,R329,R330,R314,R315,R316,R317,R31	17
63	DIGITAL	TDO	TDR3GTJ102V(1K)	R393,R394,R395,R396,R397,R398,R399,R400,R401,R402,R403,R404,R405,R406,R407	15
61	DIGITAL	TDO	TDR3GTJ103V(10K)	R300,R359,R360,R361,R362,R363,R364,R365,R366,R367,R368,R369,R370,R371,R372,R373,R374,R375,R376,R377,R378,R379,R380,R381,R382,R301,R302,R303,R337,R338,R339,R340,R341,R342,R343,R344,R345,R346,R347,R348,R349,R350,R351,R352,R353,R354,R355,R356,R357,R358,R383,R384,R385,R386,R387,R388,R389,R390,R391,R392,R333,R334,R3	64

60	DIGITAL	TDO	TDR3GTJ104V(100K)	R424,R425,R426,R427,R428,R429,R430,R431,R432,R433,R434,R435,R436,R437,R438,R439,R440,R441,R442,R443,R444,R445,R446,R447,R448,R449,R450,R451,R453,R454,R455,R456,R457,R458,R459,R460,R461,R462,R463,R464,R465,R507	42
62	DIGITAL	TDO	TDR3GTJ151V(150Ω□	R466,R467,R468,R469,R470,R471,R473,R475,R476,R477,R478,R479,R480,R481,R482,R483,R484,R485,R486,R489,R490,R491,R492	23
64	DIGITAL	TDO	TDR3GTJ332V(3.3K)	R331,R332	2
65	DIGITAL	TDO	TDR3GTJ333V(33K)	R497,R498,R499,R500,R501,R502,R503,R504	10
66	DIGITAL	TDO	TDR3GTJ393V(39K)	R508,R509	2
68	DIGITAL	TDO	TDR3GTJ470V(47Ω□	R411,R412,R413,R414,R415,R416,R417,R418,R419,R420,R421,R422,R423,R472,R474,R48	18
67	DIGITAL	TDO	TDR3GTJ**472**V(**4.7K**) / MCR10EZHJ472	R408	1
69	DIGITAL	TDO	TDR3GTJ473V(47K) / MCR10EZHJ473	R495,R496	2
52	POWER DIO	TDO	□□□□□10K(1%□□RSN25F 10K	R131	1
58	POWER DIO	TDO	□□□□□3.3K(1%□□RSN25F 3.3K	R132	1
41	POWER DIO	TI	PCM2902E□	IC118	1
1	PANEL	TOKIN	D55Y5V1H104Z(0.1/50V)	C582,C583,C584,C585,C586	5
1	TAP	TOKIN	D55Y5V1H104Z(0.1/50V)	C816,C817,C818,C819,C820	5
2	COMBO	TOKIN	D55Y5V1H104Z(0.1/50V)	C737,C738	2
2	IO PCB	TOKIN	D55Y5V1H104Z(0.1/50V)	C986,C987,C988,C989	4
3	**POWER DIO**	**TOKIN**	**D55Y5V1H104Z(0.1/50V)**	**C120,C139,C142,C143,C144,C151,C152,C153,C154,C155,C156,C157,C158,C159,C160,C195,C196,C197,C107,C108,C109,C110,C111,C119,C161,C162,C167,C168,C198, C113**	**30**
1	BOOTH MON	TOKIN	D55Y5V1H104Z(0.1/50V)	C740,C741,C742,C743,C744,C745,C739,C746,C747,C748,C749,C750,C751	13
3	IF.CF	VESTAX	SFV-03N	**CF (CF BOARD PCB)**	1
35	POWER DIO	ASAHIKASEI	AK4122VQP	IC114,IC115,IC116	3
45	DIGITAL	ASAHIKASEI	AK4386ET/VT	IC324,IC325	2
46	DIGITAL	ASAHIKASEI	AK5381ET	IC316,IC317,IC318,IC319,IC320	5
15	PANEL	ONSEMI	MC14051□CPG)□PDIP=16	IC556,IC557,IC558,IC559	4
37	BOOTH MON	KAMAYA	RSI-1/2S 470JB(6.5Xφ2.5□	R798,R799	2
48	POWER DIO	KAMAYA	RSI-2S 0.1Ω□13.0Xφ4.5□	R106	1
44	DIGITAL	KYUUSYUUDE	KHC5600ATW 24.576M	OSC300	1
3	DIGITAL	KYOUSERA	CM105CH101J50AT□100P)	C416,C417,C418,C419,C420,C421,C422,C414	9
7	DIGITAL	KYOUSERA	CM105CH221J50AT□220P)	C410,C411	2
1	DIGITAL	KYOUSERA	CM105Y5V103Z50AT(0.01)	C425,C426,C427,C428,C429,C430,C431,C432	10
2	DIGITAL	KYOUSERA	CM105Y5V104Z25AT(0.1)	C336,C337,C338,C339,C340,C341,C342,C343,C344,C345,C346,C347,C348,C349,C350,C351,C352,C353,C354,C355,C330,C331,C332,C333,C334,C335,C322,C323,C324,C325,C326,C327,C328,C329,C356,C357,C358,C359,C360,C361,C362,C363,C364,C365,C300,C301,C302,C303,C304,C305,C306,C307,C308,C309,C310,C311,C312,C313,C314,C315,C316,C317,C3	66
28	POWER DIO	KYOUSERA-K	HC-49/U-S 12MHZ□□□	X100	1
47	BOOTH MON	SANSYOUDEN	LBC22B 12K SILVER	SW701	1
34	PANEL	SANSYOUDEN	LBC22B 12K SILVER	SW550,SW551,SW552,SW553	4
29	TAP	SANSYOUDEN	LBC23M 12K□SILVER	SW812	1
52	BOOTH MON	□□□	N.M(10/35)	C779	1

53	BOOTH MON	□□□	N.M□R)	R767,R800	1
31	POWER DIO	SHINNDENNG	S1NB20-7062□□□□□□	D106	1
53	DIGITAL	SEIKO	S-80840CNUA□B8Z-T2G)	IC312	1
64	POWER DIO	SOMEYADENS	PLUS TRANS / **F13-248(**	T100	1
36	DIGITAL	THOSHIBA	1SS302□F)	D307,D308,D309,D310	4
35	DIGITAL	THOSHIBA	1SS352□TPH3.F)	D306	1
29	PANEL	THOSHIBA	2SA1296-Y□TPE.2.F)	Q550,Q551,Q552,Q553,Q554,Q555,Q556,Q557	8
25	TAP	THOSHIBA	2SA1296-Y□TPE.2.F)	Q810,Q811,Q812,Q813,Q814,Q815,Q816,Q817	8
41	BOOTH MON	THOSHIBA	2SC1815-Y□TPE2.F)	Q700,Q701,Q702,Q703,Q704,Q705	6
63	POWER DIO	THOSHIBA	2SJ438□Q)	Q101	1
54	DIGITAL	THOSHIBA	TC4051BFT□EL.N)	IC311	1
17	PANEL	THOSHIBA	TC74HC138AP□F) DIP=16	IC560	1
	TAP	THOSHIBA	TC74HC138AP□F) DIP=16	IC812	1
18	PANEL	THOSHIBA	TC74HC238AP DIP=16	IC554,IC555	2
34	POWER DIO	THOSHIBA	**TC74VHC04FT EL.K) TSSOP14**	**IC113,IC101**	2
37	DIGITAL	THOSHIBA	TC74VHC04FT□EL.K) TSSOP14	IC308	1
38	DIGITAL	THOSHIBA	TC74VHC05FT□EL.K) TSSOP14	IC310	1
40	DIGITAL	THOSHIBA	TC74VHC08FT□EL.K) TSSOP14	IC321,IC322	2
43	DIGITAL	THOSHIBA	TC74VHC14FT□EL.K)□TSSOP14	IC307	1
41	DIGITAL	THOSHIBA	TC74VHC161FT□EL.K) TSSOP16	IC300,IC301,IC302	3
39	DIGITAL	THOSHIBA	TC74VHCT04AFT□EL.K) TSSOP14	IC309	1
42	DIGITAL	THOSHIBA	TH74VHC32FT□EL.K) TSSOP14	IC323	1
33	POWER DIO	TOUYOU FUS	MF62NR 2.0A	(F106) , (F107)	2
10	BOOTH MON	NIHON KEMI	ESRA350ELL100ME07D□5φX7□	C774,C775	2
3	TAP	NIHON KEMI	ESRA350ELL100ME07D□5φX7□	C814,C815,C821,C822	4
27	IO PCB	NEUTRIK	NC3MAH-0	J907,J908	2
67	POWER DIO	NEUTRIK	NC3MAH-0	J106,J107	2
5	PANEL	HARNESS	11P-SAN(=)PHR=11	□□□□□	1
7	TAP	HARNESS	12P-SAN(=)PHR-12	□□□□□	1
22	POWER DIO	HARNESS	13P-SAN(=)PHR□13	□□□□□	1
6	PANEL	HARNESS	14P-SAN(=)PHR=14	□□□□□	1
8	TAP	HARNESS	14P-SAN(=)PHR-14	□□□□□	1
7	PANEL	HARNESS	2P-SAN(=)PHR=2	□□□□□	1
14	BOOTH MON	HARNESS	2P-SAN(=)PHR-2	□□□□□	1
4	TAP	HARNESS	3P-SAN(=)PHR=3	□□□□□	1
15	BOOTH MON	HARNESS	3P-SAN(=)PHR-3	□□□□□	2
6	COMBO	HARNESS	4P-SAN□□□PHR-4	□□□□□	1
11	IO PCB	HARNESS	4P-SAN(=)PHR-4	□□□□□	1
8	PANEL	HARNESS	4P-SAN□□□PHR-4	□□□□□	1
19	POWER DIO	HARNESS	5P-SAN(=)PHR-5	□□□□□	1
16	BOOTH MON	HARNESS	5P-SAN(=)PHR-5	□□□□□	1
5	TAP	HARNESS	5P-SAN(=)PHR-5	□□□□□	1
17	BOOTH MON	HARNESS	6P-SAN(=)PHR-6	□□□□□	1
9	PANEL	HARNESS	6P-SAN(=)PHR□6	□□□□□	7
6	TAP	HARNESS	6P-SAN(=)PHR-6	□□□□□	1
20	POWER DIO	HARNESS	7P-SAN(=)PHR-7	□□□□□	1
21	POWER DIO	HARNESS	9P-SAN(=)PHR-9	□□□□□	1
10	PANEL	HARNESS	9P-SAN(=)PHR-9	□□□□□	1
72	DIGITAL	HIROSUGI	HOT-2608□□□□□□	TP300,TP301,TP302,TP303,TP304,TP305,TP3	7
74	POWER DIO	HOSHIDEN	USB□TYPE-B / CMS1410-016010USB-B	J112	1

1	COMBO	MARUHA	RTHE50SKYB102K□□0.001UF)	C701,C702	2
1	IO PCB	MARUHA	RTHE50SKYB102K□□0.001UF)	C972,C973,C974,C975,C976,C977,C956,C957,C958,C959,C960,C961,C962,C963,C964,C96	18
1	POWER DIO	MARUHA	RTHE50SKYB102K□□0.001UF)	C181,C182,C183,C184,C185,C186,C187,C188	8
35	PANEL	MARUHA	MS-621C	SW554,SW555,SW556,SW557	4
23	BOOTH MON	MURATA	BL02RN1R3J2B	L703,L704,L705	3
9	COMBO	MURATA	BL02RN1R3J2B	L700,L701,L702	3
16	IO PCB	MURATA	BL02RN1R3J2B	L920,L921,L922,L923,L924,L925,L900,L901,L902,L903,L904,L905,L906,L907,L908,L909,L910,L911,L912,L913,L914,L915,L916,L9	26
43	POWER DIO	MURATA	BL02RN1R3J2B	L116,L117,L118,L119,L120,L121,L122,L123,L126,L127,L124,L125	12
4	DIGITAL	MURATA	GRM1882C1H100JA01D□10P)□□□	C438,C439	2
5	DIGITAL	MURATA	GRM1882C1H122JA01D(1200P)□□□	C412,C413	2
6	DIGITAL	MURATA	GRM1882C1H150JA01D(15P)□□□	C435,C436	2
8	DIGITAL	MURATA	GRM1882C1H470JA01D(47P)□□□	C444,C445,C446,C447,C448,C449,C450,C451,C452,C453,C454,C455,C456,C457	14
56	DIGITAL	MURATA	NFM18CC223R1C3□D)	L300,L301,L302,L303	4
48	DIGITAL	RUNESASU	HD64F3052BF 25V(H8/3052F□	IC314	1
49	DIGITAL	RUNESASU	HD64F3664FPV(H8/3664F□	IC313	1
29	POWER DIO	ROHM	1SR139-400□T-32)□1SR35-400□□□□	D112,D107,D108,D109	4
34	DIGITAL	ROHM	1SR154-400□TE25)	D300,D301	2
19	BOOTH MON	ROHM	1SS133□T=72)	D701,D702,D703,D704,D705,D700	6
14	PANEL	ROHM	1SS133□T=72)	D550,D551,D552,D553,D554,D555,D556,D557,D584,D573,D596,D590,D589,D577,D565,D572,D562,D595,D570,D583,D580,D568,D569,D564,D597,D593,D585,D566,D563,D575,D576,D558,D561,D594,D587,D581,D571,D560,D574,D578,D591,D567,D559,D592,D586,D579,D582	48
30	POWER DIO	ROHM	1SS133□T=72)	D110,D111	2
11	TAP	ROHM	1SS133□T-77□	D810,D811,D812,D813,D814,D815,D816,D817,D818,D819,D820,D821,D822,D823,D824,D825,D826,D827,D828,D829,D830,D831,D832,D8	26
73	DIGITAL	ROHM	DTC114YUA(T106)	Q300,Q301,Q302,Q303,Q304,Q305,Q306,Q307,Q308,Q309,Q310,Q311,Q312,Q313,Q314,Q315,Q316,Q317,Q318,Q319,Q321,Q322,Q323,Q3	28
17	TAP	ROHM	LA301AB□□□□□□	SEG810,SEG811,SEG812,SEG813,SEG814,SEG815,SEG816,SEG817	8
62	POWER DIO	ROHM	RB201A60□T-31)	D105	1
71	DIGITAL	ROHM	RB501V-40□TE-17□□	D302,D303,D304,D305	4
24	BOOTH MON	ROHM	SLR-342VR□T3)	LD700	1
25	BOOTH MON	ROHM	SLR-342YY□T3)	LD701,LD702,LD703	3
21	PANEL	ROHM	SLR-342YY□T3)	LD601,LD602,LD603,LD604,LD605,LD606,LD607,LD608,LD609,LD610,LD611,LD612,LD613,LD614,LD615,LD616LD617,LD618,LD619,LD62	24
15	TAP	ROHM	SLR-342YY□T3)	LD811,LD812,LD836,LD837,LD838,LD839,LD840,LD841,LD842,LD843,LD855,LD827,LD828,LD829,LD830,LD831,LD832,LD833,LD834,LD8	22
16	TAP	ROHM	SLR343BCT(□□(T3)	LD856,LD857	2
22	PANEL	ROHM	SLR343BCT(□□□T3)□	LD550,LD556,LD562,LD622,LD624,LD626,LD6	7
44	POWER DIO		JUMPER□□□□EMI)□□□□	L113,L114,L115	3
additional	Rear Panel		POWER SWITCH		1
69	POWER DIO		N.M(0.1)□□□□	C201	1
39	PANEL		N.M(10/16)□□□□	C566,C567,C568,C569,C570,C571,C572,C573	8

40	PANEL		N.M(47P)□□□□	C574,C575,C576,C577,C578,C579,C580,C581	8
70	POWER DIO		N.M(BOURNS MF-R110)□□□□	F104,F105	2
70	DIGITAL		N.M□R)□□□□	R309,R310,R311,R312,R313,**R304,305,306**	8
28	IO PCB		N.M□R)□□□□	R968	1
41	PANEL		N.M□R)□□□□	R614,R615,R616,R617,R618,R619,R620,R621,R622,R623,R624,R625	12
71	POWER DIO		N.M□R)□□□□	R164,R165,R178,R179,R180,R181	6