VESTAX

SERVICE NOTE

MODEL: PMC-08 PRO

preliminary

Vestax Corporation Service Department

(2006-05-30)

TOP PANEL SECTION

MASTER SECTION

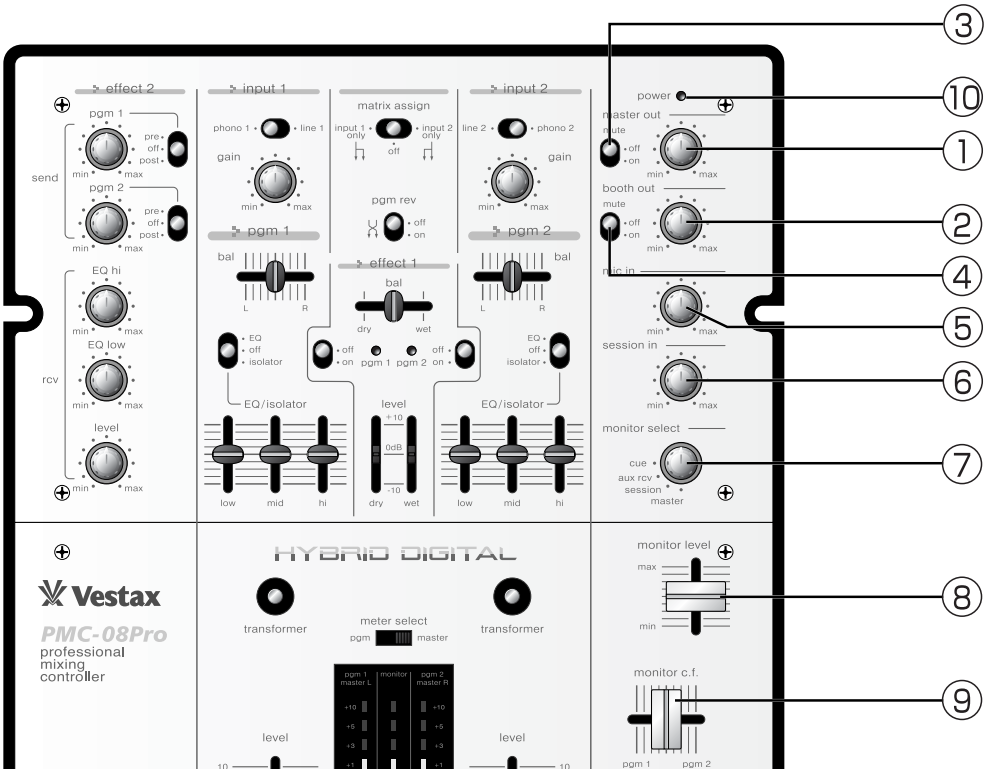

①**MASTER LEVEL VOLUME**
This volume adjusts the level of the sound signal outputted from the MASTER OUTPUT ㊶ and SUB MASTER OUPUT ㊵ located on the rear panel.

②**BOOTH LEVEL VOLUME**
This volume adjusts the level of the sound signal outputted from BOOTH OUT ㊷ located on the rear panel.

③**MASTER MUTE SWITCH**
This switch mutes the sound outputted from MASTER OUTPUT ㊶ and SUB MASTER OUTPUT ㊵

④**BOOTH MUTE SWITCH**
This switch mutes the sound outputted from BOOTH OUTPUT ㊷

⑤**MIC LEVEL VOLUME**
This volume adjusts the MIC level of MIC INPUT located on the rear panel.

⑥**SESSION LEVEL VOLUME**
This volume adjusts the level of the sound signal from devices inputted via SESSION INPUT ㊽ located on the rear panel.

⑦**MONITOR SELECT SWITCH**
This switch selects the monitor sound from CUE, AUX RCV, SESSION and MASTER.

⑧**MONITOR LEVEL VOLUME**
This volume adjusts the headphone level connected via the HEADPHONE terminal located on the front panel.

⑨**C.F. MONITOR VOLUME**
This volume adjusts and selects the sound signals from PGM1 and PGM2 when the MONITOR SELECT switch has selected CUE.

NOTE
The C.F. MONITOR does not reverse when the C.F. REVERSE switch is set to REVERSE.

⑩**POWER INDICATOR**
This indicator lights up when the POWER switch located on the rear panel is turned ON.

PGM SECTION

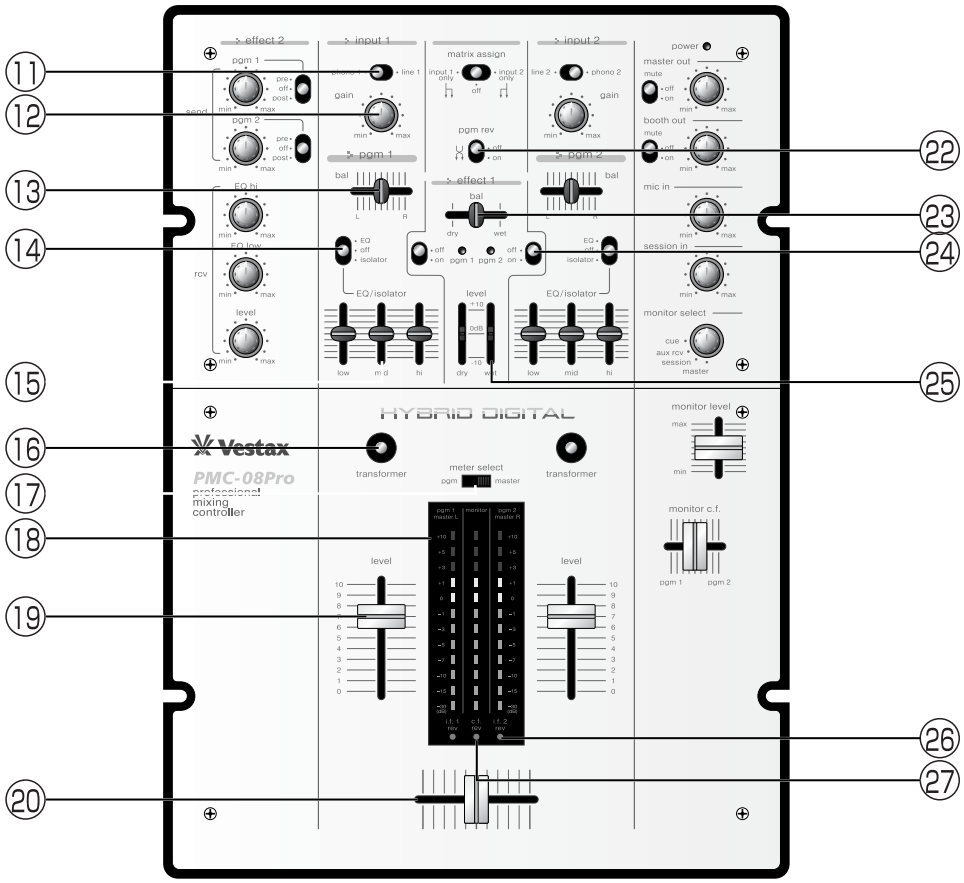

⑪INPUT SELECT SWITCH

This switch selects each PGM channels input sound. The input signal can be selected from devices connected to LINE INPUT㊸ and PHONO INPUT㊹.

⑫GAIN VOLUME

This volume adjusts each PGM channels input level, and is used to set the signal level sent to the INPUT FADER㊾ at the same level.

⑬PGM BALANCE VOLUME

This volume adjusts the L/R balance of each PGM channel.

⑭PGM EQ/ISOLATOR SELECT SWITCH

This switch selects each PGM channels sound adjustment from EQ, OFF and ISOLATOR.

⑮PGM EQ/ISOLATOR VOLUME

The 3 faders adjusts each PGM channels HI, MID and LOW sound frequency.

⑯TRANSFORMER SWITCH

This switch mutes the sound signal inputted to the INPUT FADER on each PGM channel. ※ The angle of the switch can be changed.

NOTE

Please read <FADER and SWITCH Replacements> to change the angle of the switch.

⑰LEVEL INDICATOR SWITCH

This switch selects the LEVEL INDICATOR⑱ to indicate either the PGM level or MONITOR level.

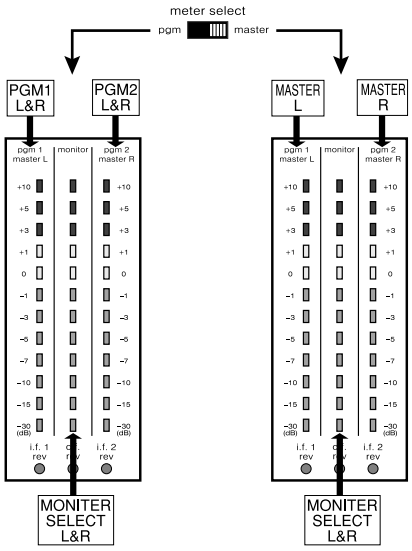

⑱LEVEL INDICATOR

This indicator indicates the MASTER level in the center bar and PGM levels on the left and right bars.

⑲INPUT FADER VOLUME

This fader adjusts each PGM channels input level.

NOTE

If the fader begins to cause noises when it is slides, please replace it with a different input fader unit. Please read <Fader Replacements> for replacement instructions.

⑳CROSS FADER

This fader adjusts the mix level of PGM1 and PGM2. If the C.F. REVERSE switch is set to NORMAL, the sound of PGM1 is outputted when the crossfader is set to the left, and the sound of PGM2 is outputted when it is set to the right.

NOTE

If the fader begins to cause noises when it is slides, please replace it with a different cross fader unit. Please read <Fader Replacements> for replacement instructions.

㉑MATRIX ASSIGN SWITCH

This switch assigns the 2 inputs of this mixer to each PGM channel.

NORMAL---INPUT 1 to PGM1, INPUT2 to PGM2

INPUT1 ONLY---INPUT1 is assigned to both PGM channels.

INPUT2 ONLY---INPUT2 is assigned to both PGM channels.

㉒PGM REVERSE SWITCH

This switch exchanges the sound signal inputted to each PGM channel. PGM1's input signal is sent to PGM2 and PGM2's input signal is sent to PGM1. The settings for PGM BALANCE VOLUME⑬、PGM EQ/ISOLATOR SELECT SWITCH⑭、PGM EQ/ISOLATOR VOLUME⑮、EFFECT ON/OFF SWITCH㉔、TRANSFORMER SWITCH⑯ and INPUT FADER VOLUME⑲ will also be exchanged with the input signal.

㉓EFFECT VOLUME

This volume adjusts the balance of output level to an external effector and the input level from an external effector via the EFFECT SEND/RCV connection located on the rear panel.

DRY---The original sound sent from the EFFECT SEND terminal to an external effector.

WET---The effect sound sent back from an external effector via the EFFECT RCV terminal.

The output from EFFECT SEND will be POST CF (after the crossfader), and the input from EFFECT RCV will be PRE MASTER (before master volume).

㉔PGM EFFECT ON/OFF SWITCH

This switch selects each PGM channels sound signal output to an external effector ON and OFF.

㉕EFFECT ADJUST VOLUME

This volume adjusts the each DRY and WET level of the effectors connected to the 2 EFFECT SEND/RCV connections㊷,㊸.

㉖C.F. REVERSE INDICATOR

This LED lights up when the C.F. REVERSE switch㉝ is set to REVERSE.

㉗I.F. REVERSE INDICATOR

This LED lights up when the I.F. REVERSE switc㉜ is set to REVERSE.

AUX SECTION

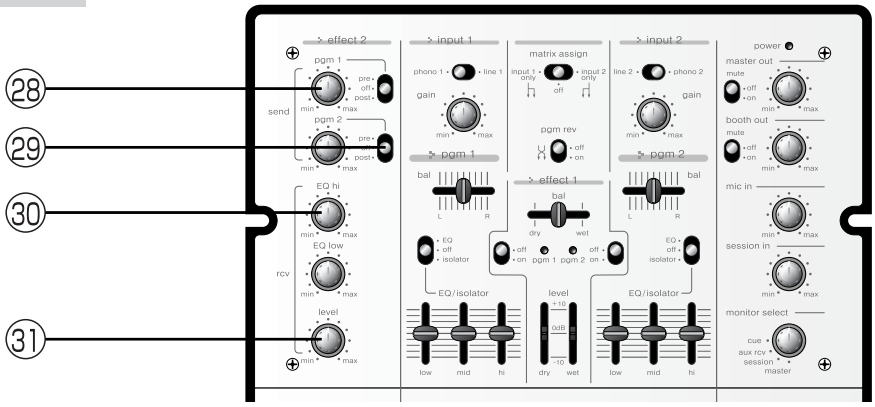

㉘PGM AUX SEND VOLUME

This volume adjusts the level of the sound signal sent to an external effector connected to AUX SEND located on the rear panel.

㉙PGM AUX SEND SELECT SWITCH

This switch switches the position of the sound signal being sent to an external effector connected to AUX SEND.

PRE---Sets the position to PRE I.F. (Before the input fader)

OFF---Doesn't send the signal

POST---Sets the position to POST C.F. (After the crossfader)

㉚AUX RCV EQ VOLUME T

his volume adjusts the sound quality of the input sound from the external effector connected to AUX RCV. The sound quality is adjustable in HI and LOW frequencies.

㉛AUX RCV LEVEL VOLUME

This volume adjusts the input level of the sound signal from an external effector connected to AUX RCV.

FRONT PANEL

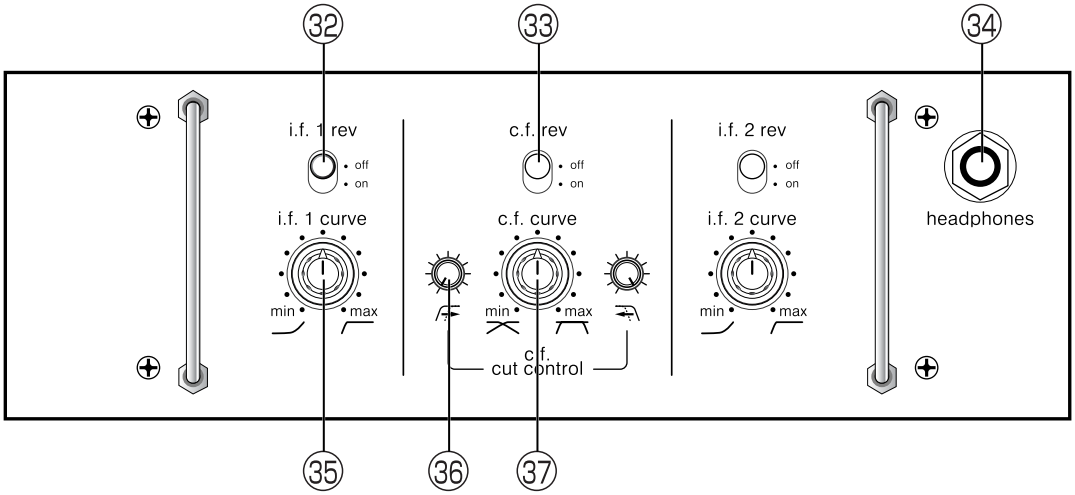

㉜I.F. REVERSE SWITCH

This switch reverses the input fader function. The sound level will be minimum when the fader is set to the top and maximum when set to the bottom.

㉝C.F. REVERSE SWITCH

This switch reverses the input fader function. The left side of the cross fader will output PGM2 and the right side will output PGM1.

㉞HEADPHONE JACK

The sound signal adjusted with the MONITOR LEVEL volume will be outputted from this terminal. 1/4inch stereo plugs can be plugged.

㉟I.F. CURVE VOLUME

This volume adjusts the curve of the INPUT FADER. The curve is sharper when turned to the right and smoother when turned to the left.

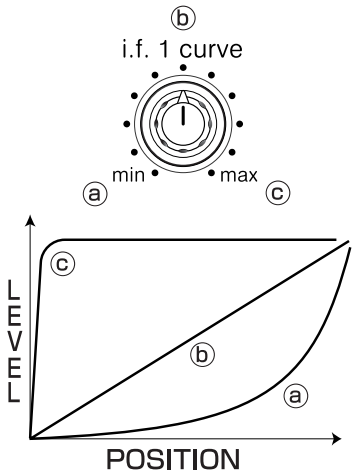

The curve characteristic changes from ⓐ→ⓑ→ⓒ when the volume knob is turned clockwise.

㊱C.F. Cut lag adjust VOLUME

This volume adjusts the cut lag width of the cross fader.

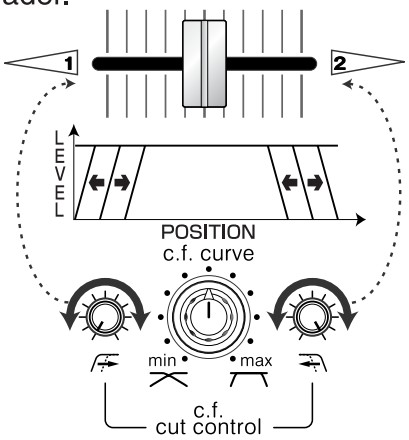

- The left volume knob adjusts the cut lug width on the left side of the crossfader.
- The Right volume knob adjusts the cut lug width on the right side of the crossfader.

㊲C.F. CURVE VOLUME

This volume adjusts the curve of the cross fader. The curve is sharper when turned to the right and smoother when turned to the left.

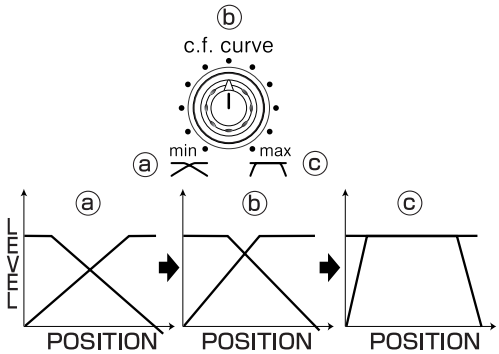

a…Suitable for long mixes. The volume of the sound signal changes gently while PGM1 is exchanged to PGM2.
b…The middle of a and b.
c…suitable for scratches. This is the most sharpest curve for the crossfader.

REAR PANEL

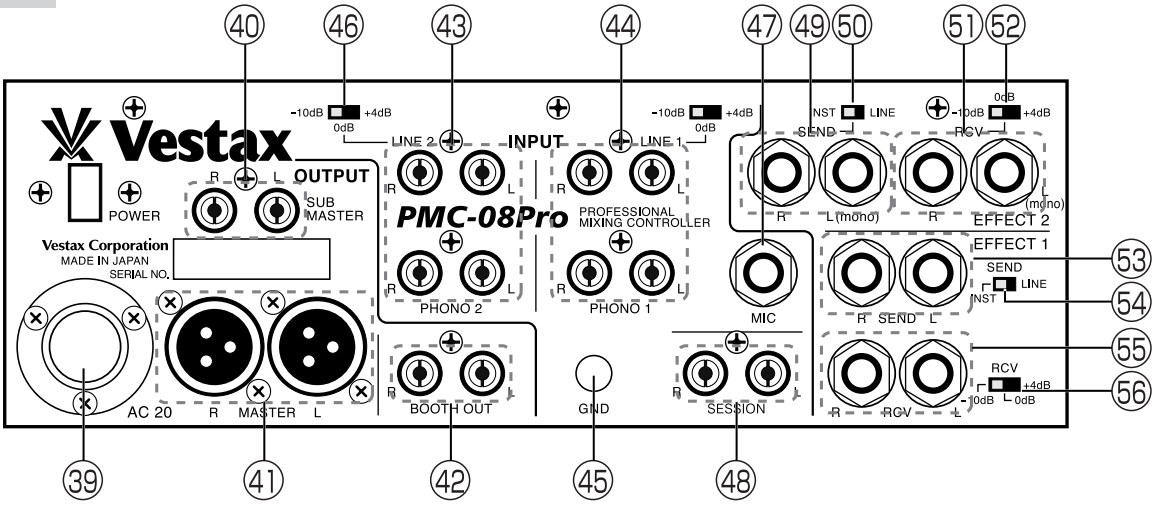

㊳POWER SWITCH
This switch turns the Power ON/OFF. The POWER indicator lights up when the power is ON.

NOTE
Please make sure that the volume of the power amps are lowered or power is turned off when turning the mixer's power ON. It may cause noises and damage to the power amp and speakers.

㊴POWER JACK
Please connect Vestax's AC-20.

NOTE
DO NOT USE other power adaptors than Vestax's AC-20. It may cause damage to the mixer and cannot be repaired on the warranty.

㊵SUB MASTER OUTPUT
The final mix signal is outputted from this terminal. Connect it to an amplifier. (RCA Unbalanced output)

㊶MASTER OUPUT
The final mix signal is outputted from this terminal. Connect it to an amplifier. (XLR Balanced output)

㊷BOOTH OUTPUT
The DJ booth's monitor sound is outputted from this terminal. The output signal is the same as MASTER OUTPUT and SUB MASTER OUTPUT, allowing a use as a third output. (RCA Unbalance output)

㊸LINE INPUT
This is the Input terminal for each LINE device. CD players, MD players, TAPE players, DAT and VTR outputs are connectable. (RCA Unbalanced input)

㊹PHONO INPUT
This is the Input terminal for turntables. Please connect turntables with MM cartridges. (RCA Unbalanced input).

NOTE
An additional head amp will be required when using a MC cartridge.

㊺GND TERMINAL
Connect each turntables ground cable.

㊻INPUT LEVEL SELECT SWITCH
This switch selects the mixers input level. The input level can be selected from -0dB, 0dB, and 4dB.

NOTE
Please check the input and output level of the devices you are going to connect before selecting the input level.
–10dB devices: MP3 Players, MD Players, Portable CD Players, PC Output, Keyboards
0dB devices: CD Players, Institutional MD Players
+4dB devices: Institutional Devices

㊼MIC INPUT
Connection for microphones. 1/4inch plugs connectable. (RCA Unbalanced input)

㊽SESSION INPUT
The master output of other mixers can be matched to the same level when each mixer is inputted to SESSION INPUT. (RCA Unbalanced input)

㊾AUX SEND OUTPUT
Connect it to the input of external effectors. This terminal sends out the selected sound signal from PGM AUX SEND and PGM AUX SEND SELECT. Please connect it to external effectors or samplers. The RL sound signals will be outputted from the left jack when it is connected only to the left channel.

㊿OUPUT LEVEL SELECT SWITCH
This switch adjusts the output level of AUX SEND. Line level(0dB) for LINE and instrument level(-15dB) for INST.

(51)AUX (effect 2) RCV INPUT
Connect the output of an external effector to this terminal. The PMC-08 will output both LR channels even when the effector is only connected to the L channel.

㊷AUX (effect 2) INPUT LEVEL SELECT SWITCH

This switch selects the AUX RCV (51) input level. The input level can be selected from -0dB, 0dB, and 4dB.

NOTE

Please check the input and output level of the devices you are going to connect before selecting the input level.
–10dB devices: MP3 Players, MD Players, Portable CD Players, PC Output, Keyboards
0dB devices: CD Players, Institutional MD Players
+4dB devices: Institutional Devices

㊸EFFECT SEND OUTPUT

Connect it to the input of external effectors. The RL sound signals will be outputted from the left jack when it is connected only to the left channel.

㊹EFFECT (effect1) OUTPUT LEVEL SELECT SWITCH

This switch adjusts the output level of EFFECT SEND(53). Line level(0dB) for LINE and instrument level(-15dB) for INST.

㊺EFFECT RCV INPUT

Connect the output of an external effector to this terminal. The PMC-08 will output both LR channels even when the effector is only connected to the L channel.

㊻EFFECT(effect 1) INPUT LEVEL SELECT SWITCH

This switch selects the EFFECT RCV (51) input level. The input level can be selected from -0dB, 0dB, and 4dB.

NOTE

Please check the input and output level of the devices you are going to connect before selecting the input level.
–10dB devices: MP3 Players, MD Players, Portable CD Players, PC Output, Keyboards
0dB devices: CD Players, Institutional MD Players
+4dB devices: Institutional Devices

HOW TO CHANGE THE FADER UNIT

How to remove the top panel

①Remove the knobs on the INPUT FADER, CROSS FADER, MONITOR LEVEL, and MONITOR CROSSFADER, as shown in fig-a. (Total 5 knobs)
②Unscrew the 4 screws on the top panel with a plus screw driver as shown in fig-a.

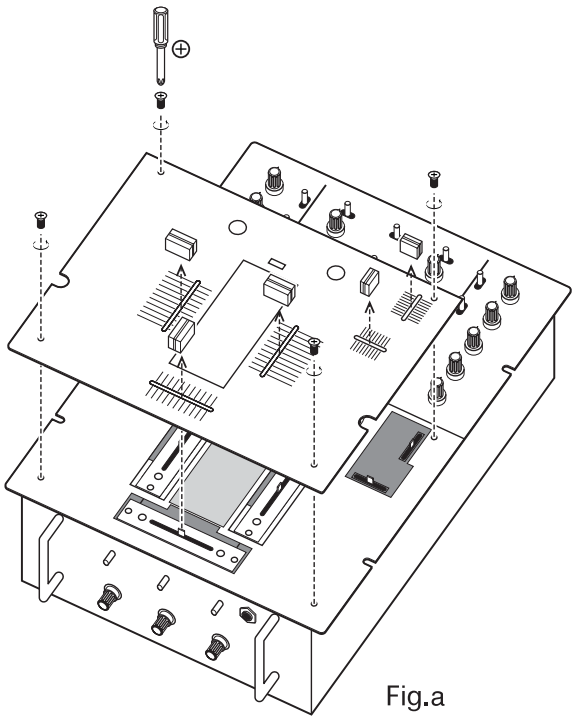

Fig.a

How to change the crossfader and input fader unit

①Remove the top panel, unscrew the 2 screws on the fader panel and raise the fader unit as shown in fig-b.
②Disconnect the pin cable connected to the fader unit and the mixer, as shown in fig-c. (Be careful not to bend the connectors pins)
③Connect the pin cable to the new fader unit, and set the unit following instruction ” to ！.

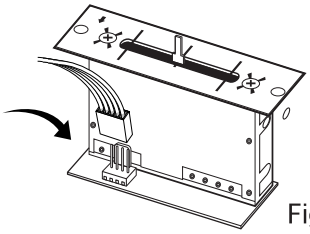

Fig.c

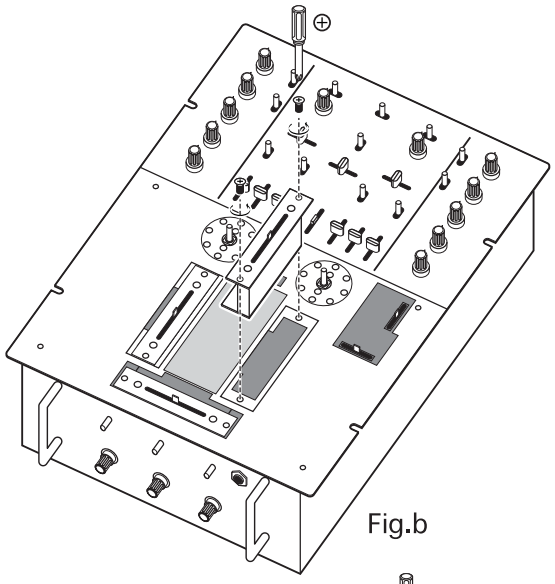

Fig.b

How to change the switch unit

①Remove the top panel as instructed in (How to change the fader unit)
②Unscrew the 2 screws on the switch panel and raise the switch unit as shown in fig-d.
③Disconnect the connector connected to the switch unit and the mixer as shown in fig-e.
④Connect the cable to the new switch unit and set the unit following instruction ②,” and ！.

How to change the angle of the switch

①Unscrew the 2 screws holding the switch unit and raise the switch unit as shown in fig-e.
②Change the switches angle to your preference and screw it with the 2 screws.
③Set the top panel back.

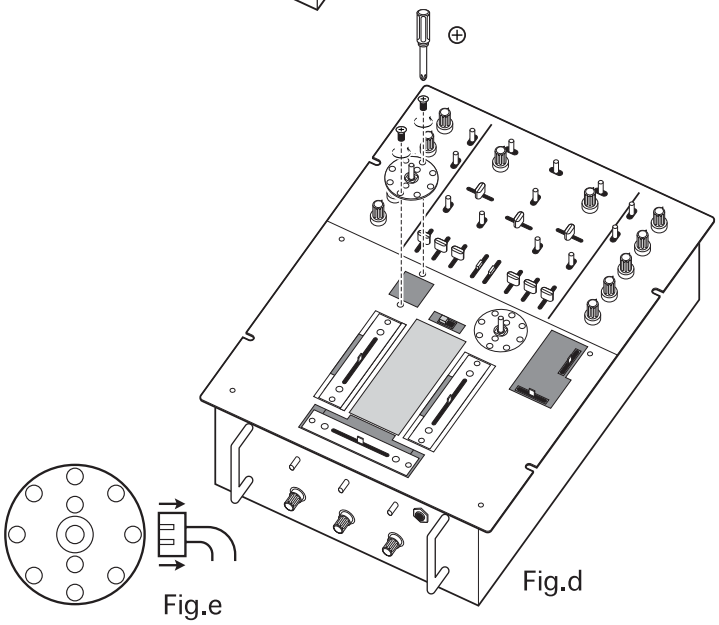

Fig.e

Fig.d

NOTE

BE CAREFUL of the angle of the fader unit when changing the fader unit.
INPUT FADER: Set the unit having the connector facing left.
CROSS FADER: Set the unit having the connector on the top side.

- **Please MAKE SURE that the power is OFF when changing the fader unit or switch unit. It may cause noises or the mixer to short.**
- **Please use the correct size screw driver when unscrewing and screwing screws. Using the wrong size may cause damage to the screws.**

MAIN SPECIFICATIONS

INPUT	0dB The input level can be switched to -10dB, 0dB and +4dB with the INPUT LEVEL switch.
OUTPUT	0dB The output level can be switched to line(0dB) and inst(-15dB) with the OUTPUT LEVEL switch.
Headphone output	250mW
Frequency Response	±1dB up to 20Hz -20KHz
Measurement（W×H×D）	264 x 80(100: including knob) x 393mm
WEIGHT	4.5kg

PMC-08 PRO LIST OF SCHEMATICS

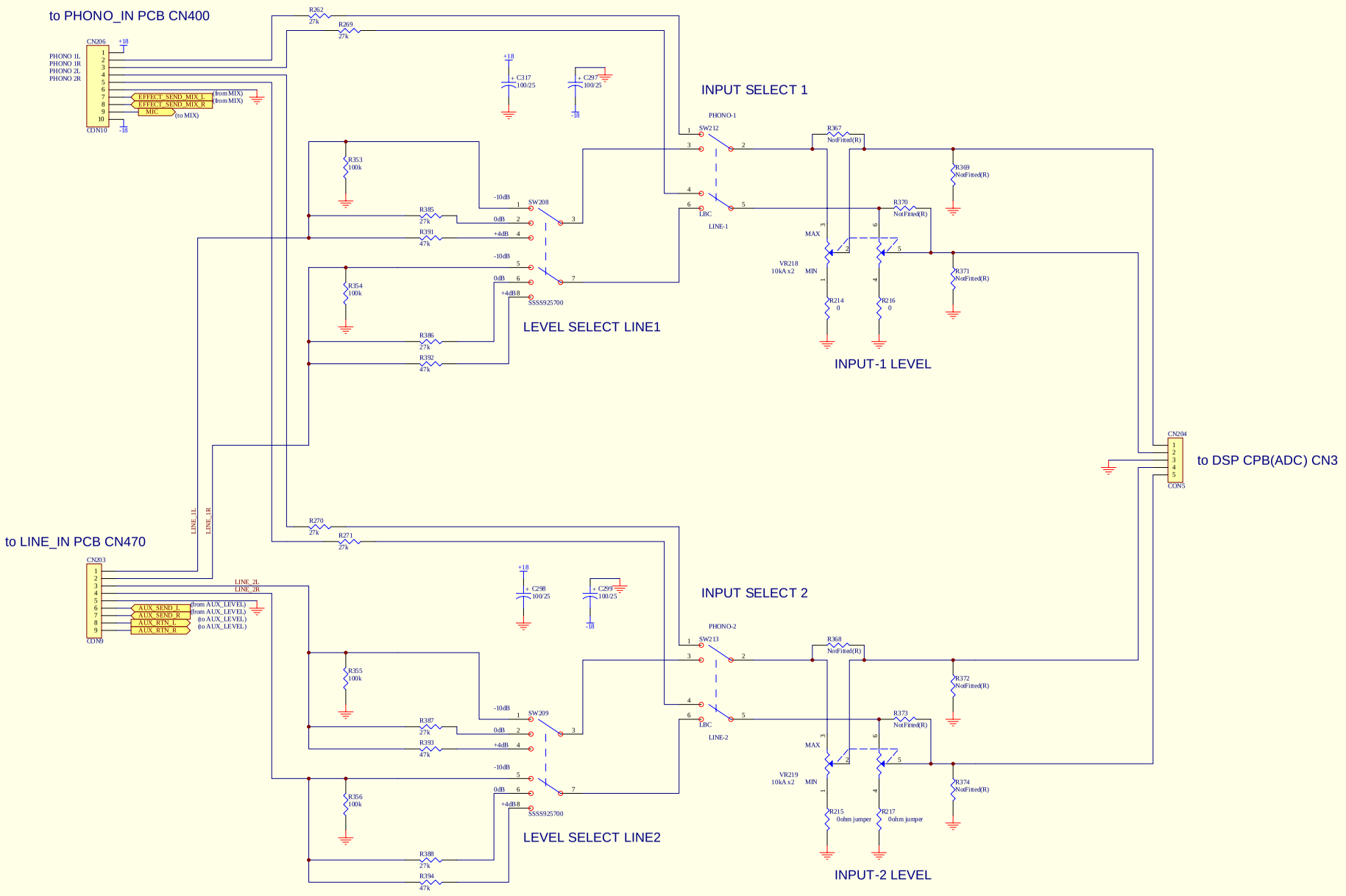

Model	PMC-08
Sheet	CONTROL PCB(INPUT LEVEL)
YANO CIRCUIT LABO	
28-Nov-2005	1 / 6

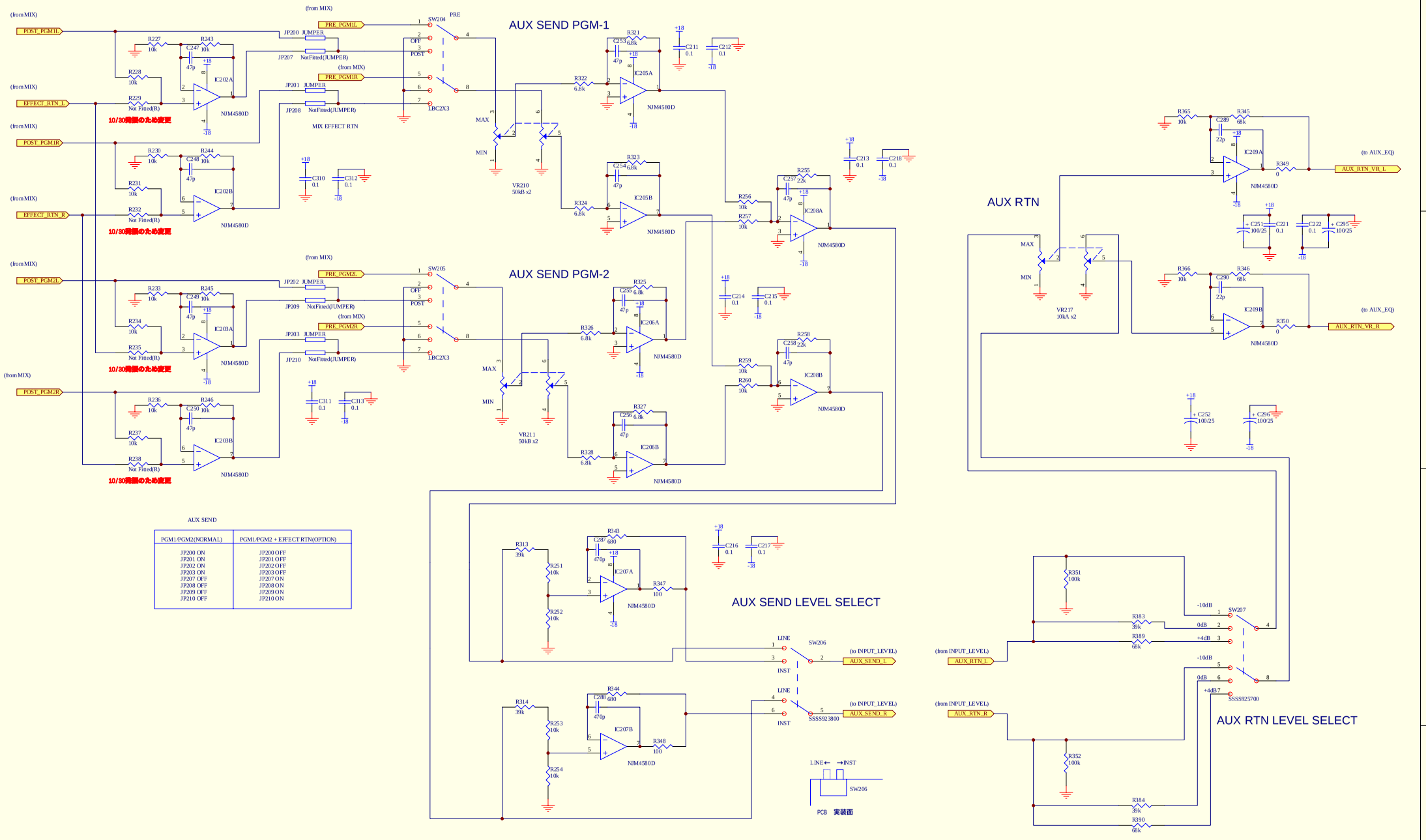

AUX SEND

PGM1/PGM2(NORMAL)	PGM1/PGM2 + EFFECT RTN(OPTION)
JP200 ON	JP200 OFF
JP201 ON	JP201 OFF
JP202 ON	JP202 OFF
JP203 ON	JP203 OFF
JP207 OFF	JP207 ON
JP208 OFF	JP208 ON
JP209 OFF	JP209 ON
JP210 OFF	JP210 ON

Model	PMC-08
Sheet	CONTROL PCB(AUX LEVEL)
YANO CIRCUIT LABO	
28-Nov-2005	2 / 6

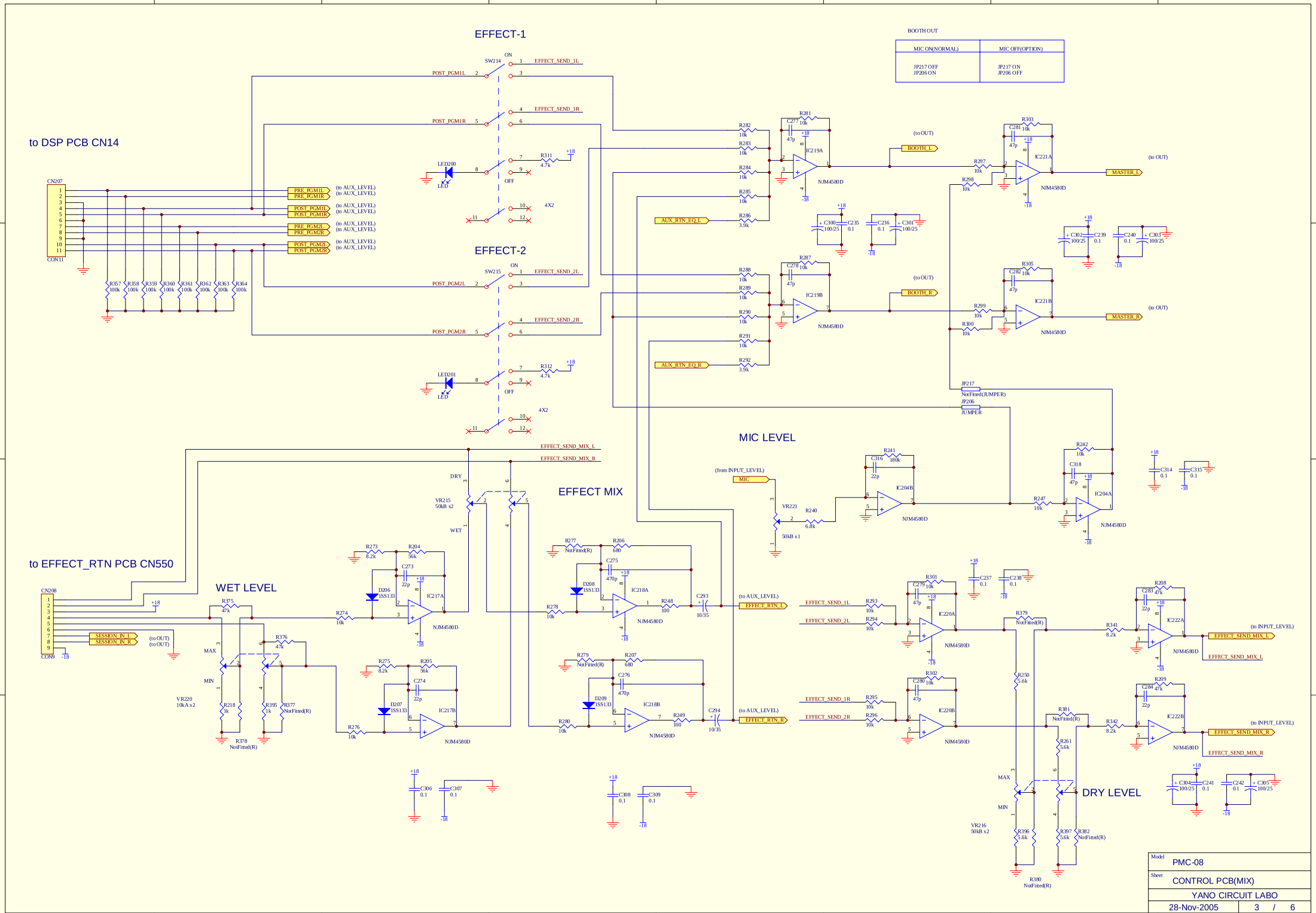

Model	PMC-08
Sheet	CONTROL PCB(MIX)
YANO CIRCUIT LABO	
28-Nov-2005	3 / 6

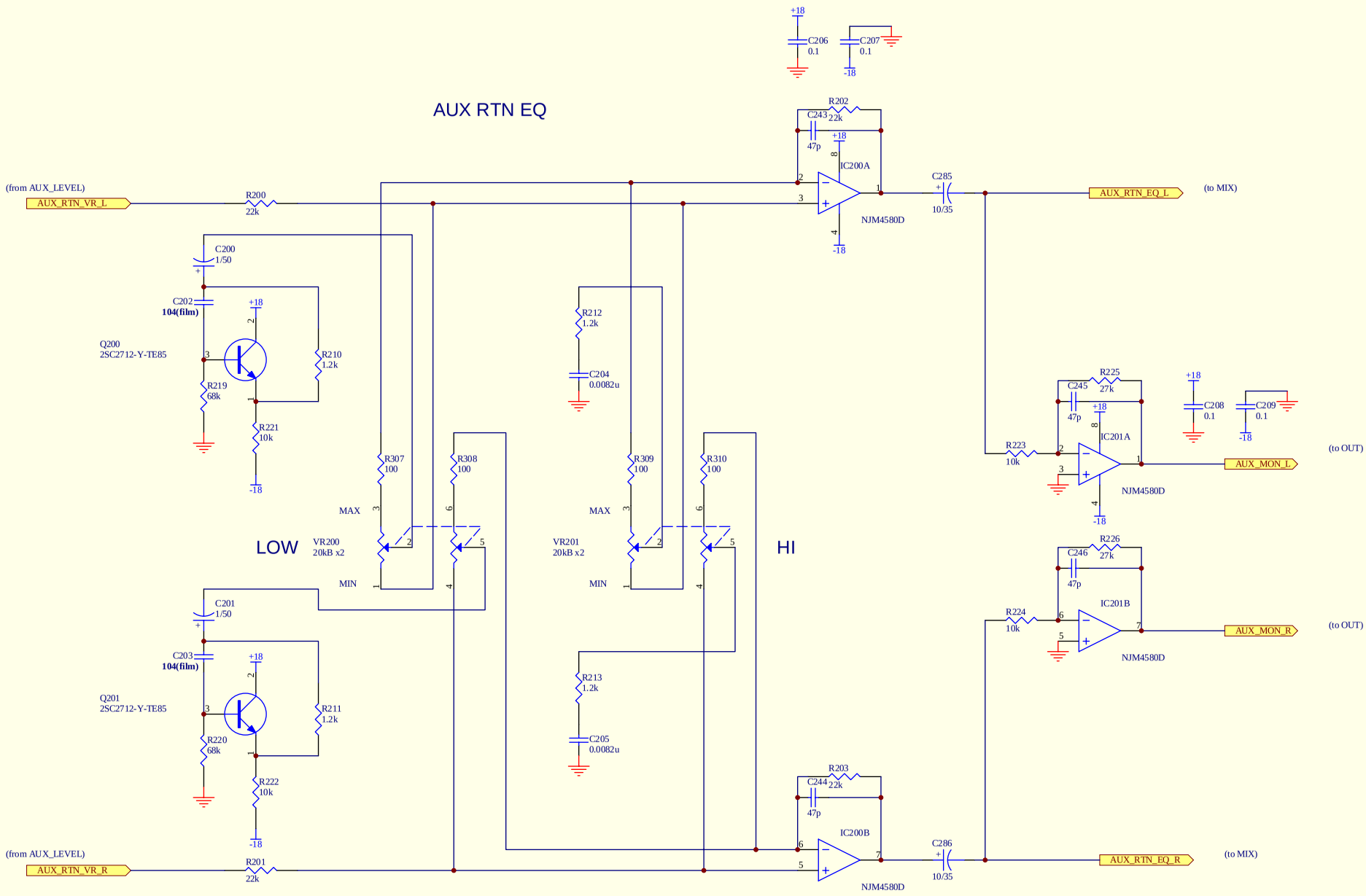

Model	PMC-08
Sheet	CONTROL PCB(AUX EQ)
YANO CIRCUIT LABO	
28-Nov-2005	4 / 6

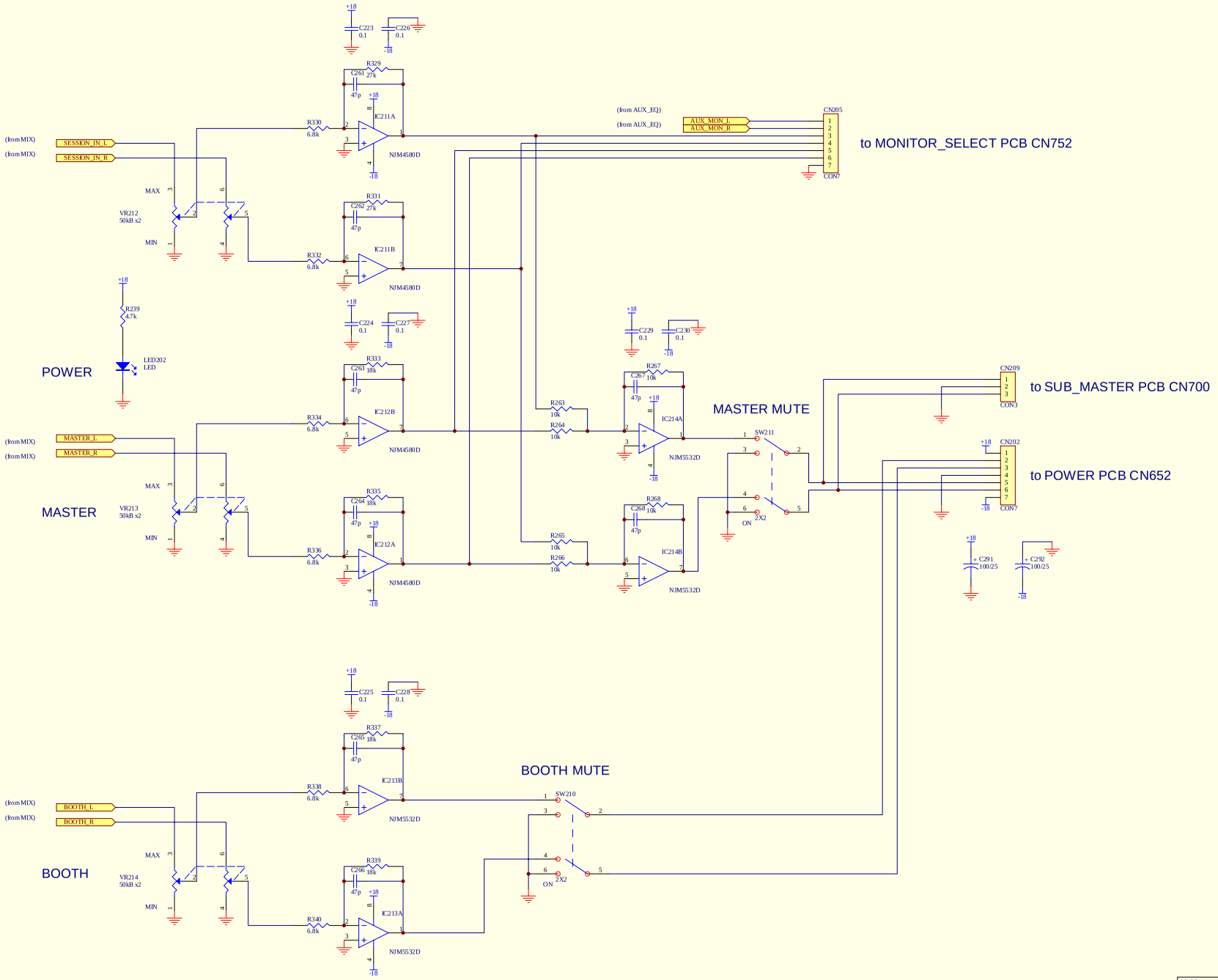

Model	PMC-08
Sheet	CONTROL PCB(OUT)
YANO CIRCUIT LABO	
28-Nov-2005	5 / 6

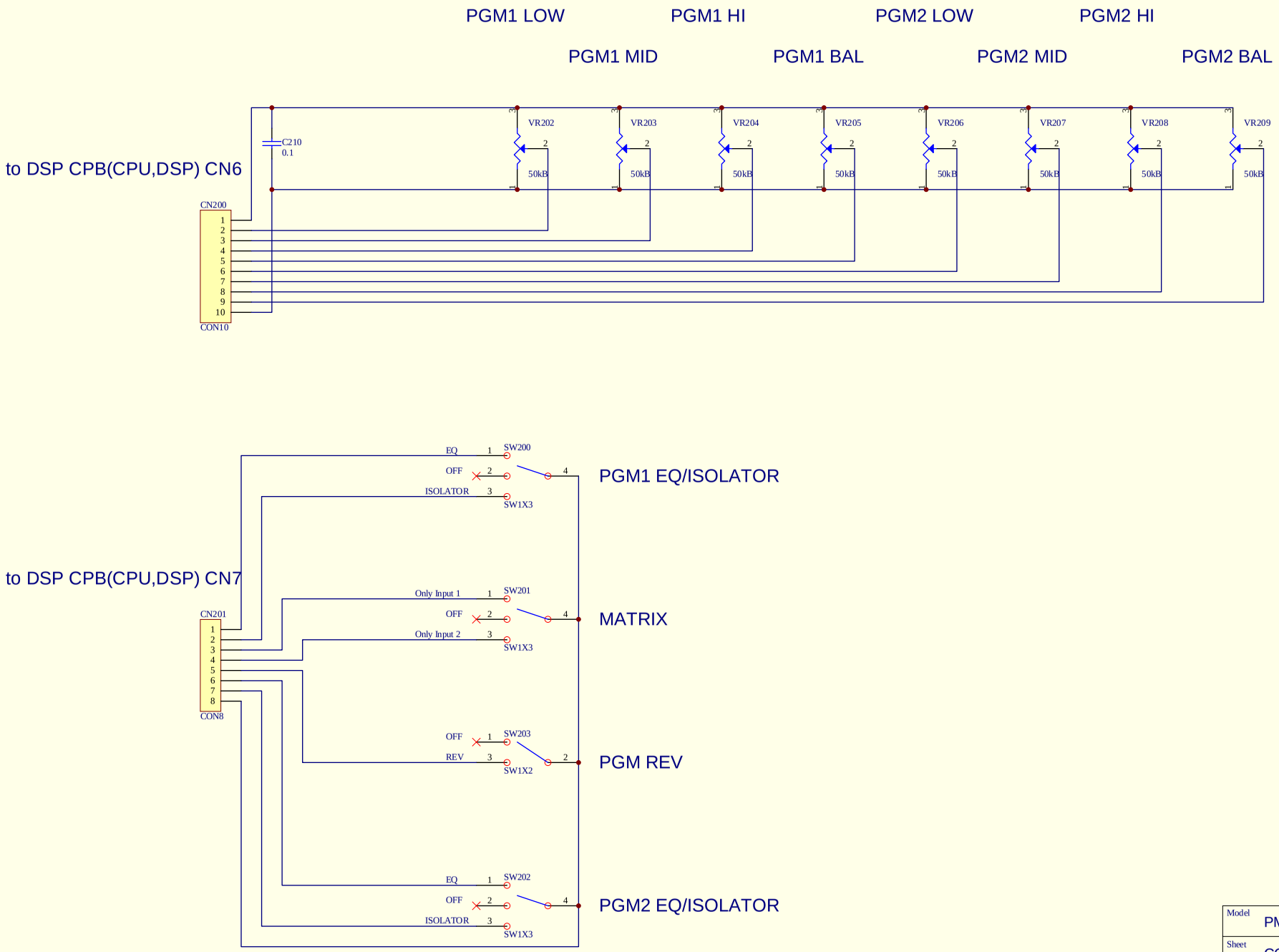

Model	PMC-08
Sheet	CONTROL PCB(DIGITAL)
YANO CIRCUIT LABO	
28-Nov-2005	6 / 6

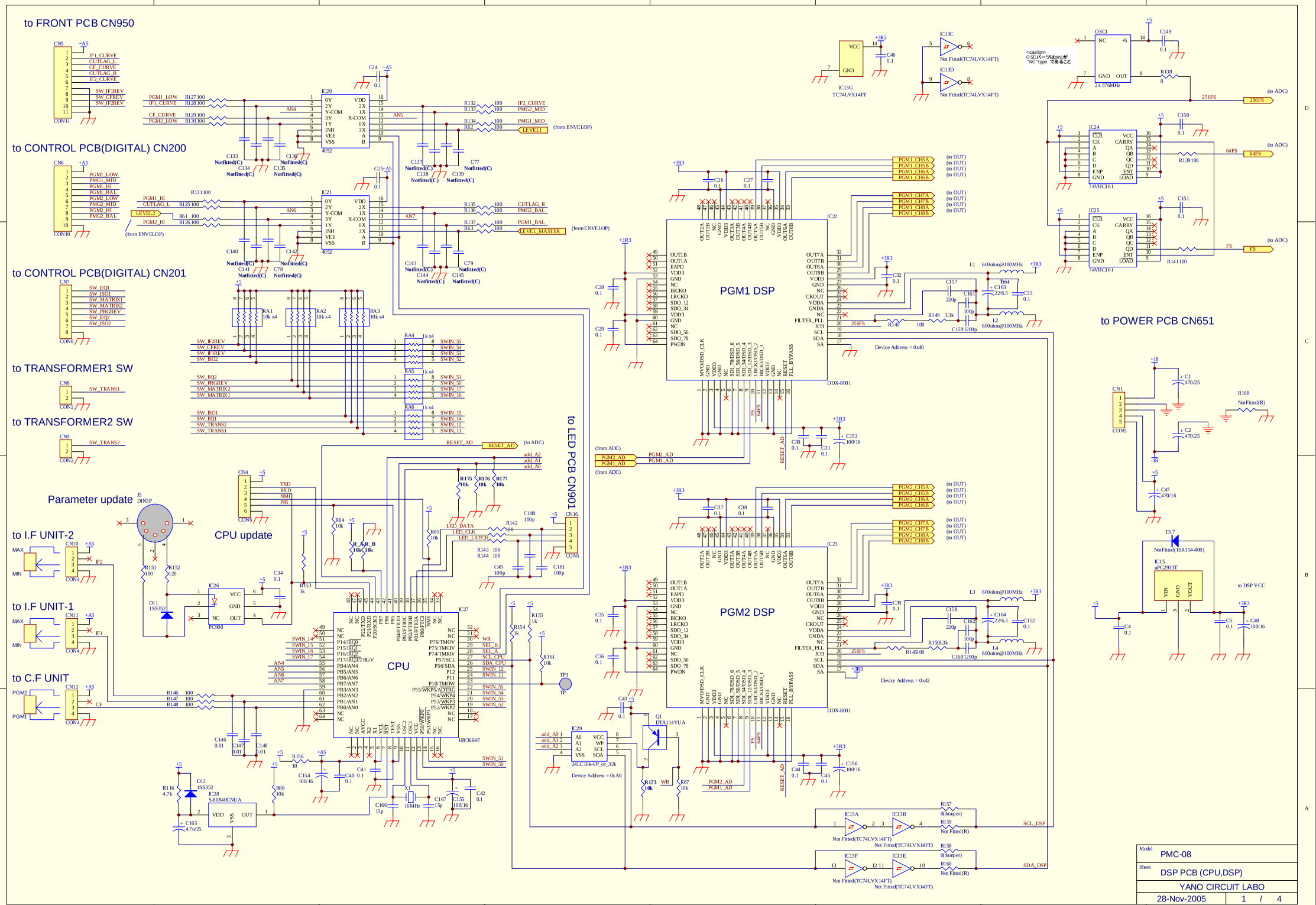
to FRONT PCB CN950
to CONTROL PCB(DIGITAL) CN200
to CONTROL PCB(DIGITAL) CN201
to TRANSFORMER1 SW
to TRANSFORMER2 SW
Parameter update
to I.F UNIT-2
to I.F UNIT-1
to C.F UNIT
CPU update
CPU
PGM1 DSP
PGM2 DSP
to LED PCB CN901
to POWER PCB CN651
Model PMC-08
Sheet DSP PCB (CPU,DSP)
YANO CIRCUIT LABO
28-Nov-2005 1 / 4

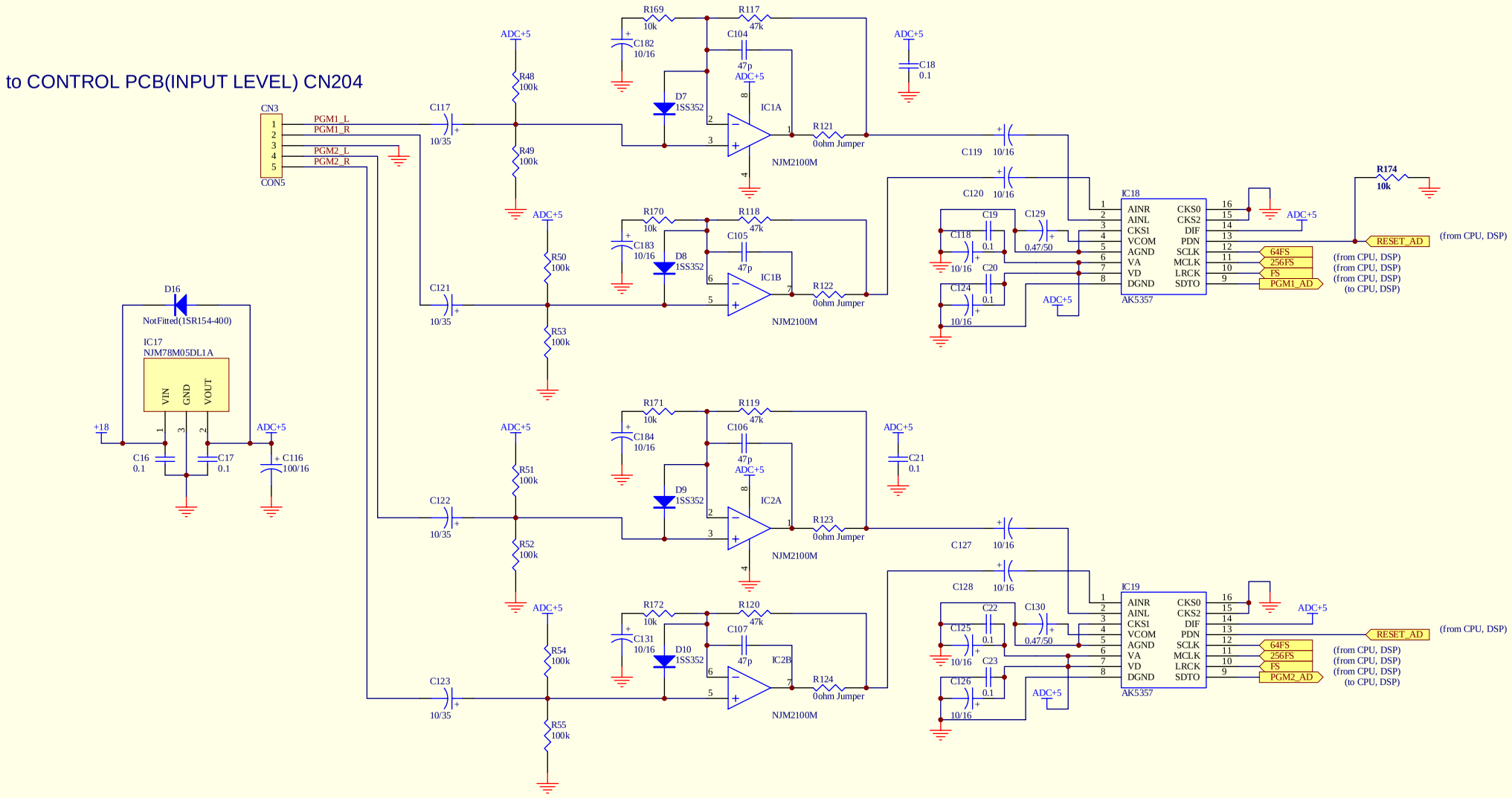

Model	PMC-08
Sheet	DSP PCB (ADC)
YANO CIRCUIT LABO	
28-Nov-2005	2 / 4

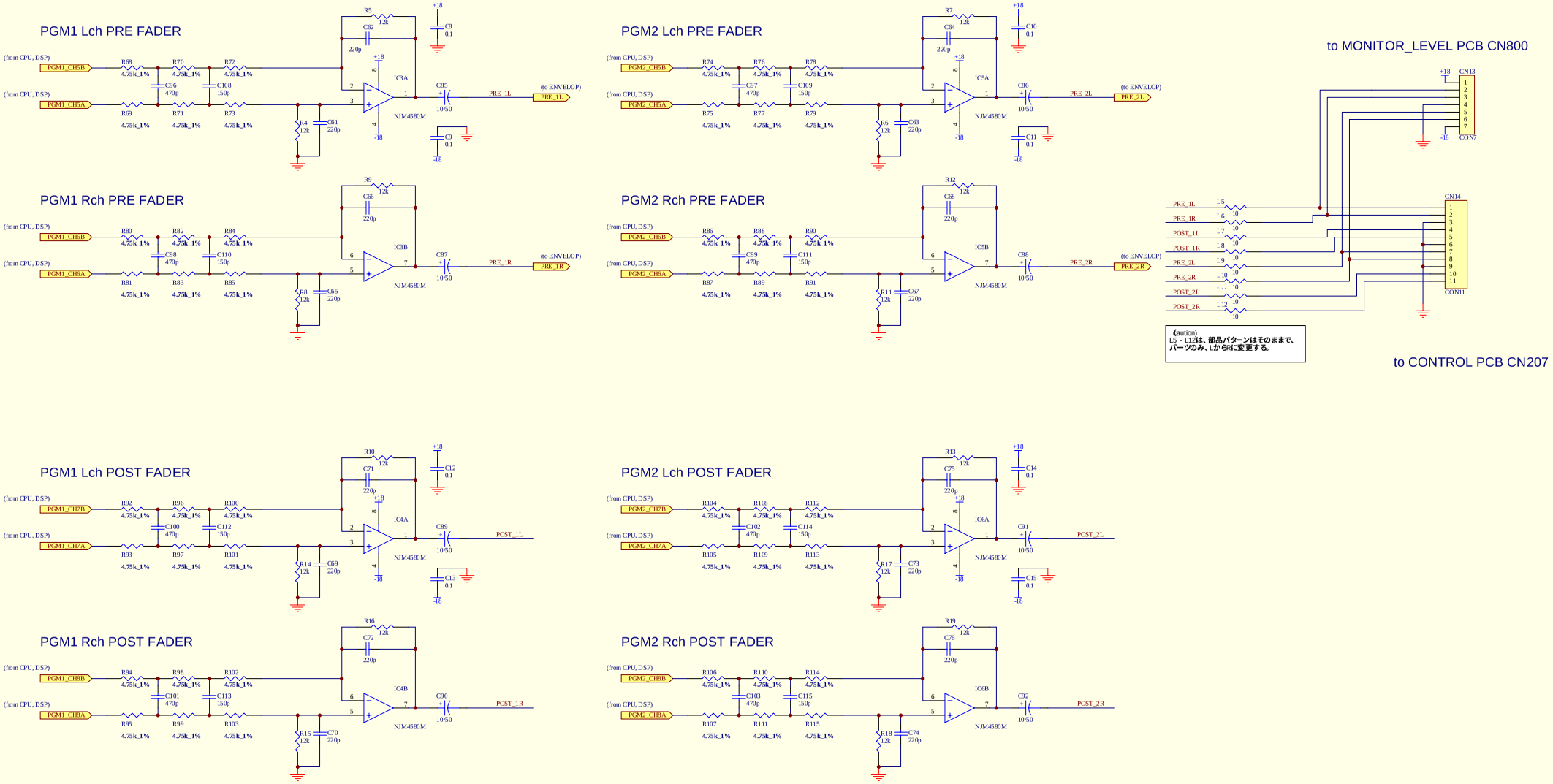

Model	PMC-08
Sheet	DSP PCB (OUT)
YANO CIRCUIT LABO	
28-Nov-2005	3 / 4

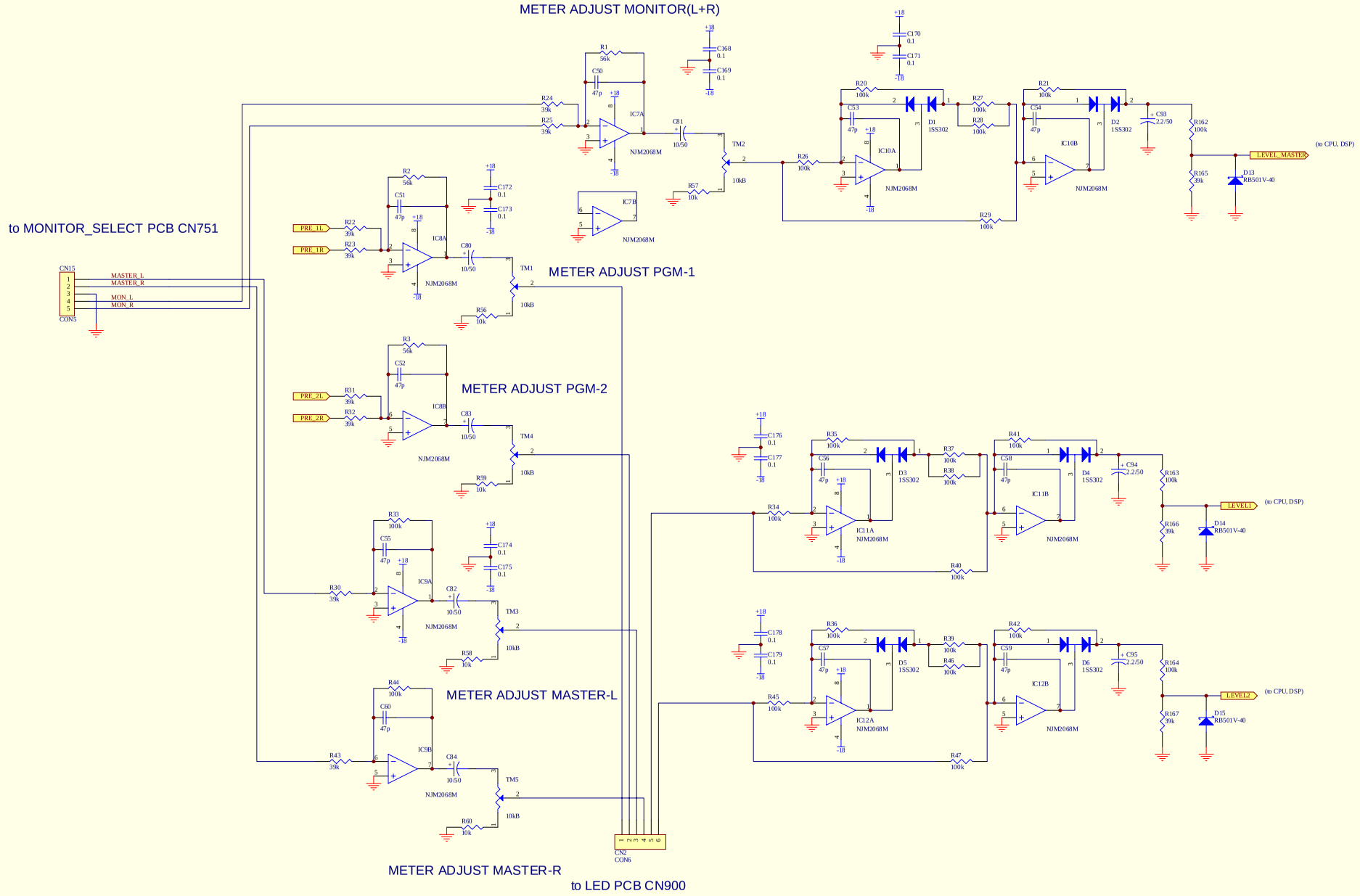

Model	PMC-08
Sheet	DSP PCB (ENVELOP)
YANO CIRCUIT LABO	
28-Nov-2005	4 / 4

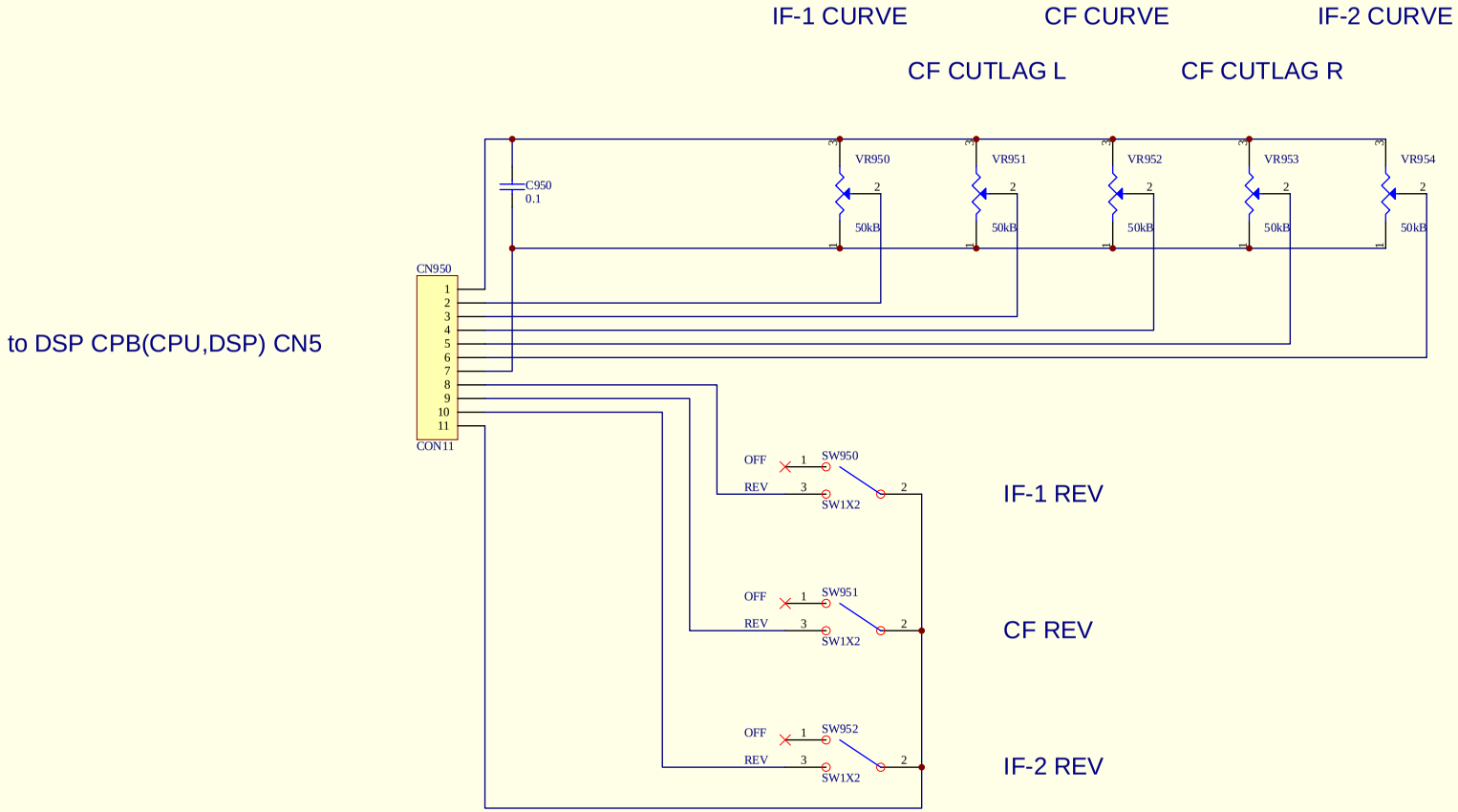

Model	PMC-08
Sheet	FRONT PCB
YANO CIRCUIT LABO	
28-Nov-2005	1 / 1

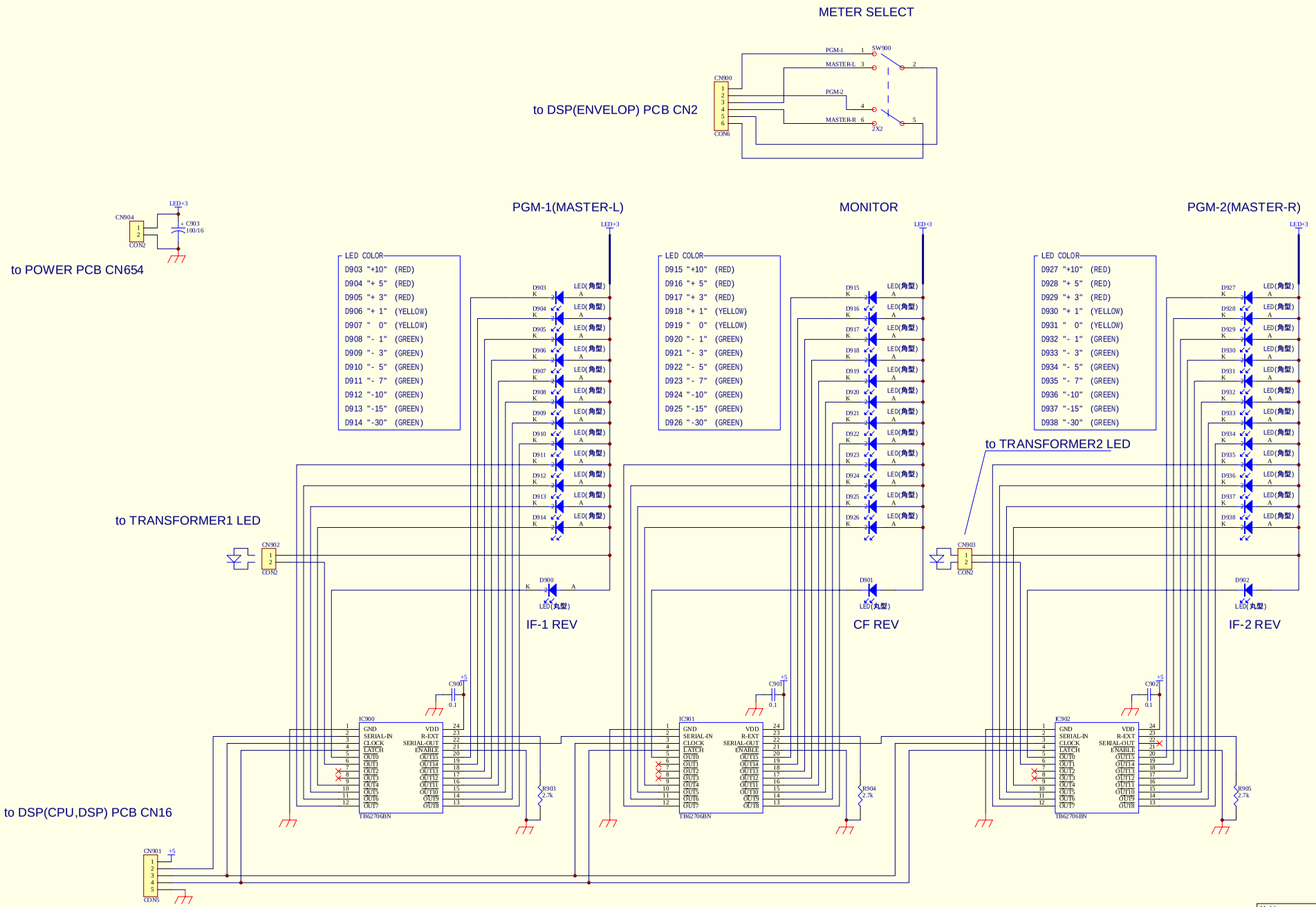

Model	PMC-08
Sheet	LED PCB
YANO CIRCUIT LABO	
28-Nov-2005	1 / 1

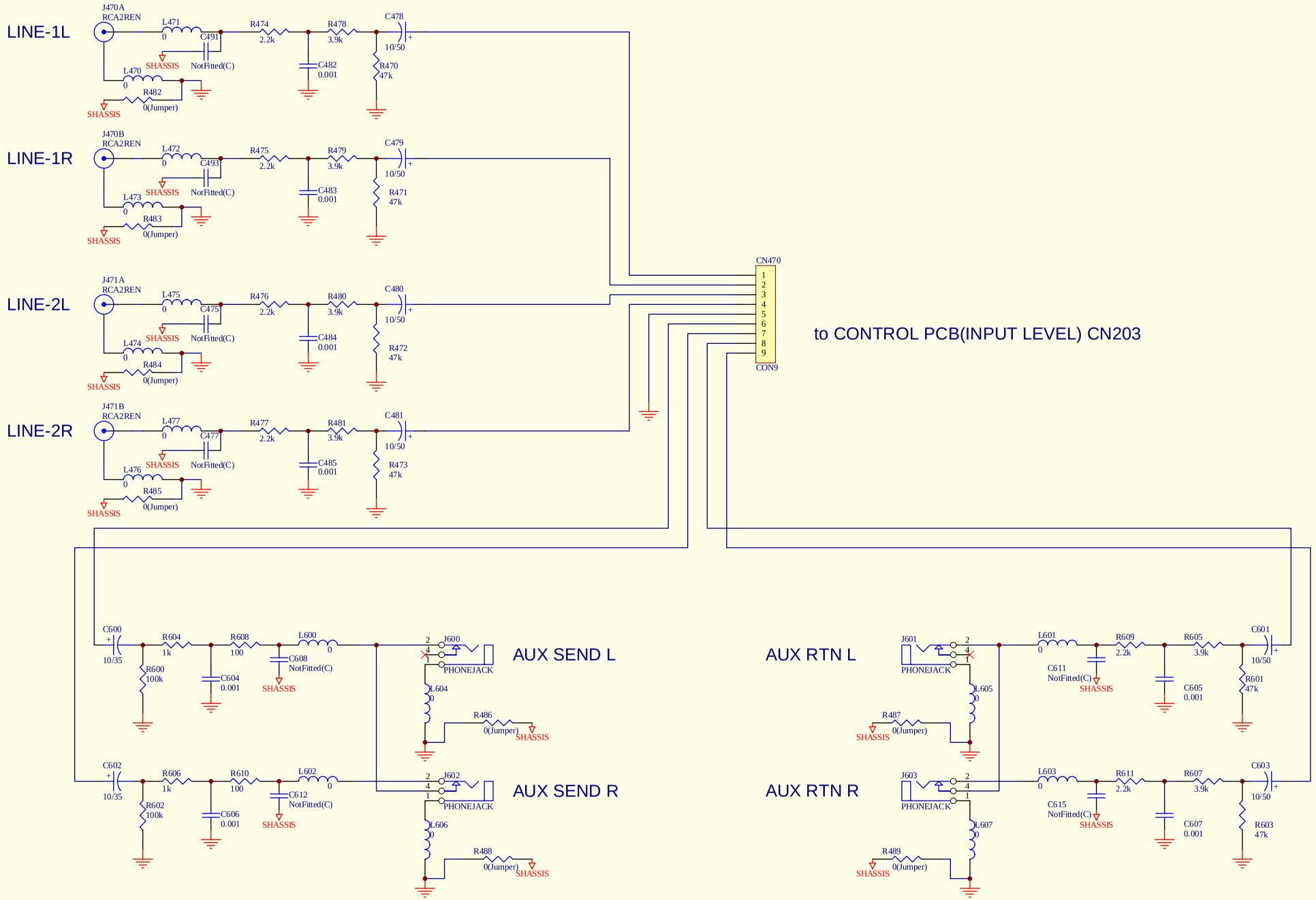

Model	PMC-08
Sheet	LINE_IN PCB
YANO CIRCUIT LABO	
28-Nov-2005	1 / 1

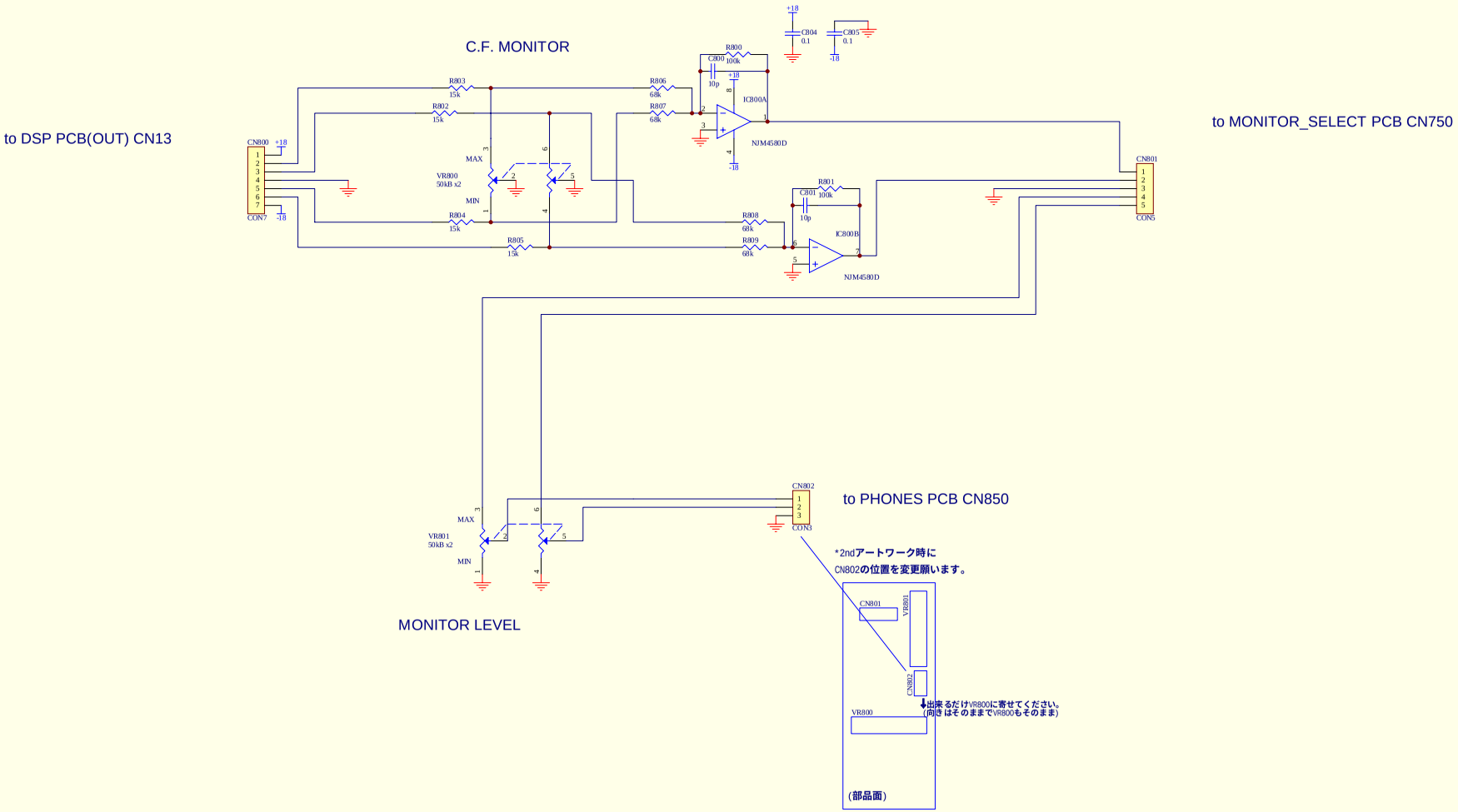

Model	PMC-08
Sheet	MONITOR_LEVEL PCB
YANO CIRCUIT LABO	
28-Nov-2005	1 / 1

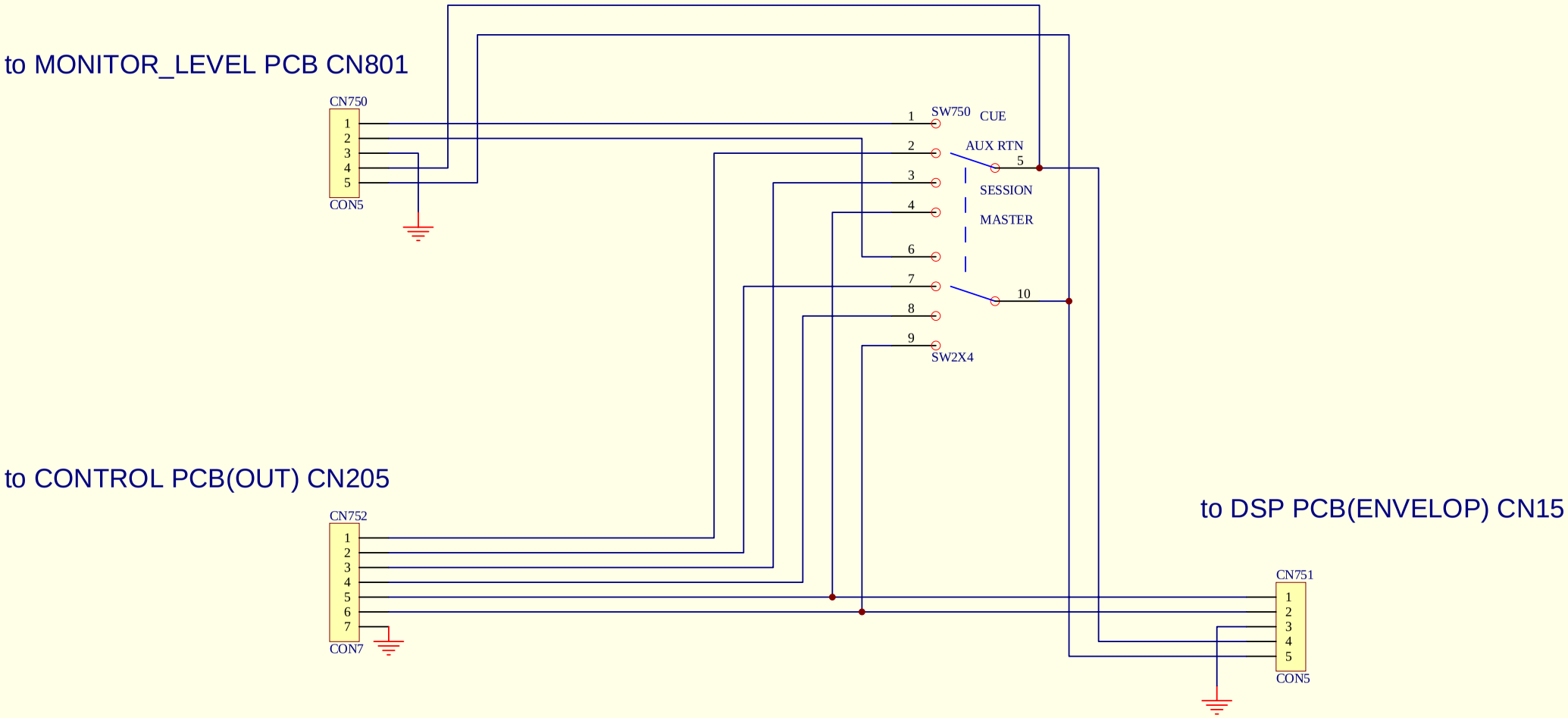

Model	PMC-08
Sheet	MONITOR_SELECT PCB
YANO CIRCUIT LABO	
28-Nov-2005	1 / 1

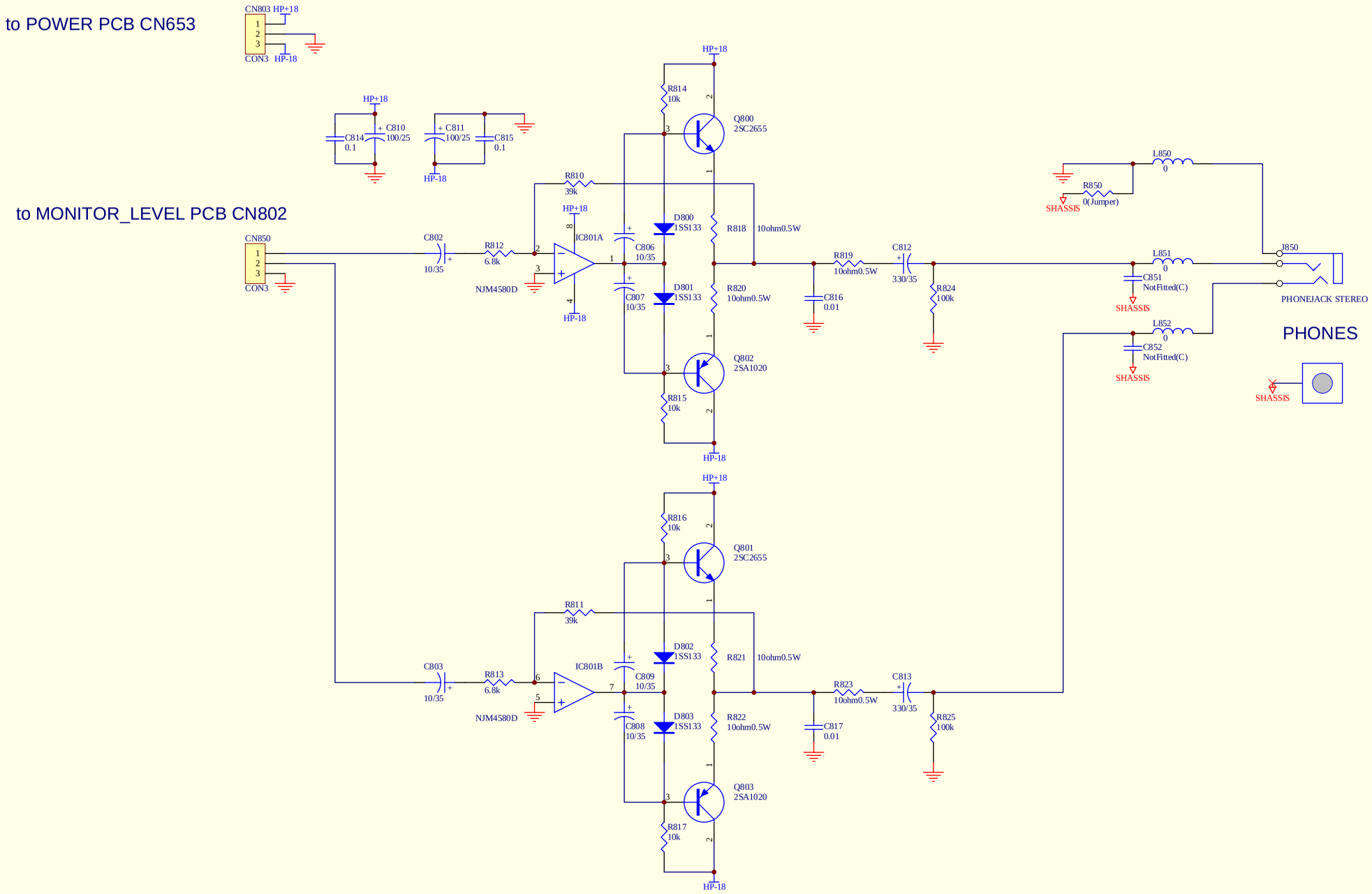

Model	PMC-08
Sheet	PHONES PCB
YANO CIRCUIT LABO	
28-Nov-2005	1 / 1

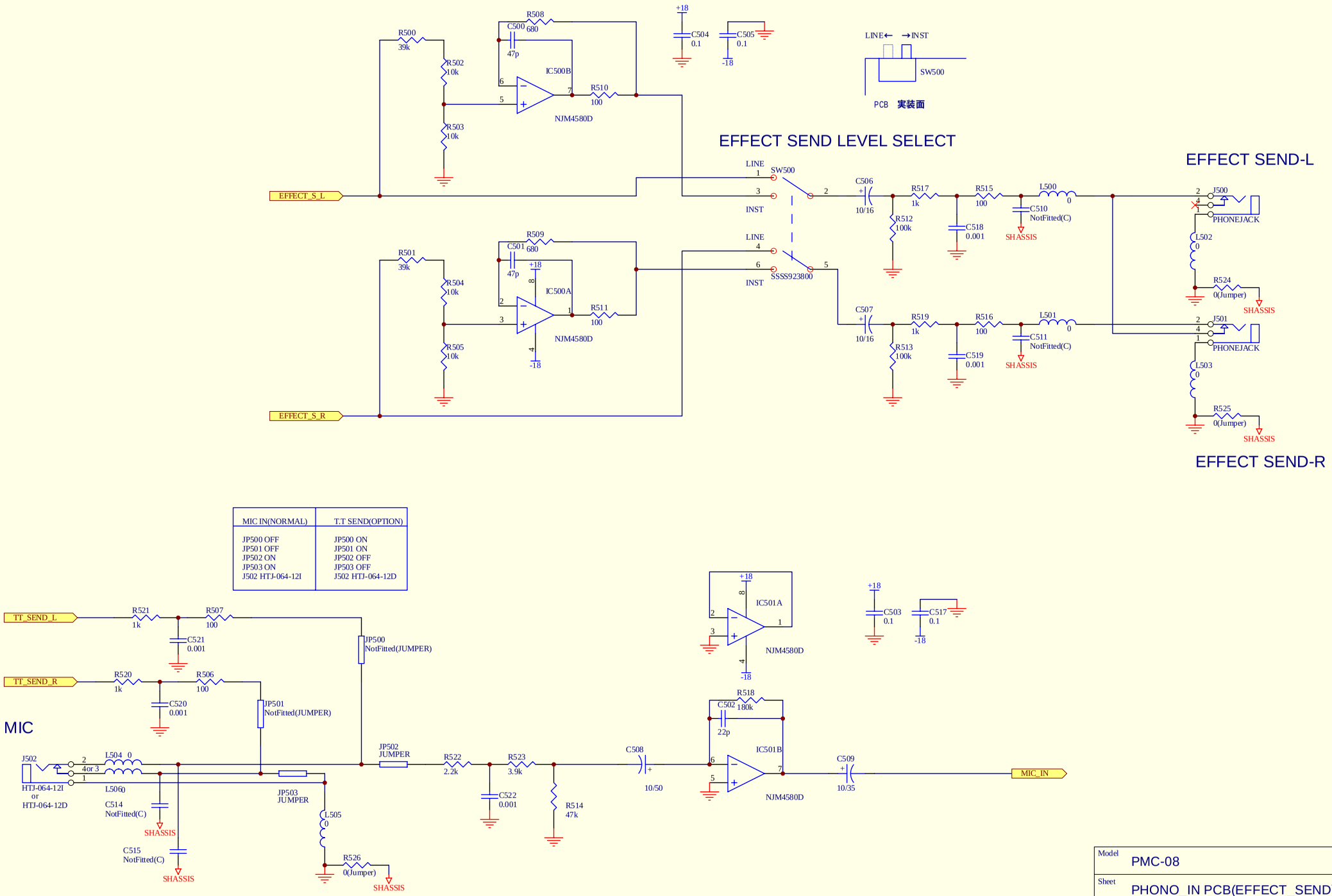

MIC IN(NORMAL)	T.T SEND(OPTION)
JP500 OFF	JP500 ON
JP501 OFF	JP501 ON
JP502 ON	JP502 OFF
JP503 ON	JP503 OFF
J502 HTJ-064-12I	J502 HTJ-064-12D

Model	PMC-08
Sheet	PHONO_IN PCB(EFFECT_SEND)
YANO CIRCUIT LABO	
28-Nov-2005	2 / 2

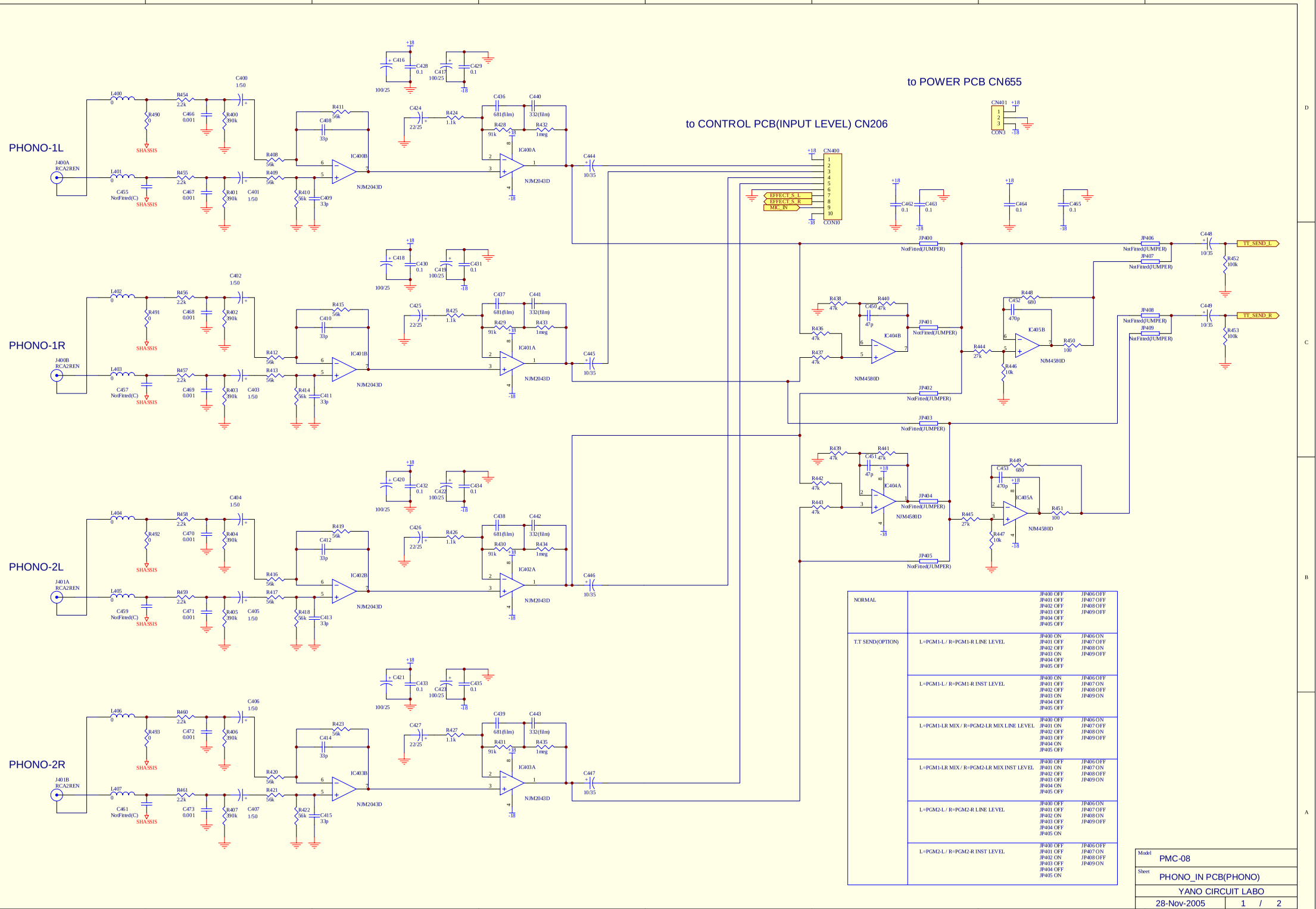

NORMAL		JP400 OFF JP401 OFF JP402 OFF JP403 OFF JP404 OFF JP405 OFF	JP406 OFF JP407 OFF JP408 OFF JP409 OFF
T.T SEND(OPTION)	L=PGM1-L / R=PGM1-R LINE LEVEL	JP400 ON JP401 OFF JP402 OFF JP403 ON JP404 OFF JP405 OFF	JP406 ON JP407 OFF JP408 ON JP409 OFF
	L=PGM1-L / R=PGM1-R INST LEVEL	JP400 ON JP401 OFF JP402 OFF JP403 ON JP404 OFF JP405 OFF	JP406 OFF JP407 ON JP408 OFF JP409 ON
	L=PGM1-LR MIX / R=PGM2-LR MIX LINE LEVEL	JP400 OFF JP401 ON JP402 OFF JP403 OFF JP404 ON JP405 OFF	JP406 ON JP407 OFF JP408 ON JP409 OFF
	L=PGM1-LR MIX / R=PGM2-LR MIX INST LEVEL	JP400 OFF JP401 ON JP402 OFF JP403 OFF JP404 ON JP405 OFF	JP406 OFF JP407 ON JP408 OFF JP409 ON
	L=PGM2-L / R=PGM2-R LINE LEVEL	JP400 OFF JP401 OFF JP402 ON JP403 OFF JP404 OFF JP405 ON	JP406 ON JP407 OFF JP408 ON JP409 OFF
	L=PGM2-L / R=PGM2-R INST LEVEL	JP400 OFF JP401 OFF JP402 ON JP403 OFF JP404 OFF JP405 ON	JP406 OFF JP407 ON JP408 OFF JP409 ON

Model	PMC-08
Sheet	PHONO_IN PCB(PHONO)
YANO CIRCUIT LABO	
28-Nov-2005	1 / 2

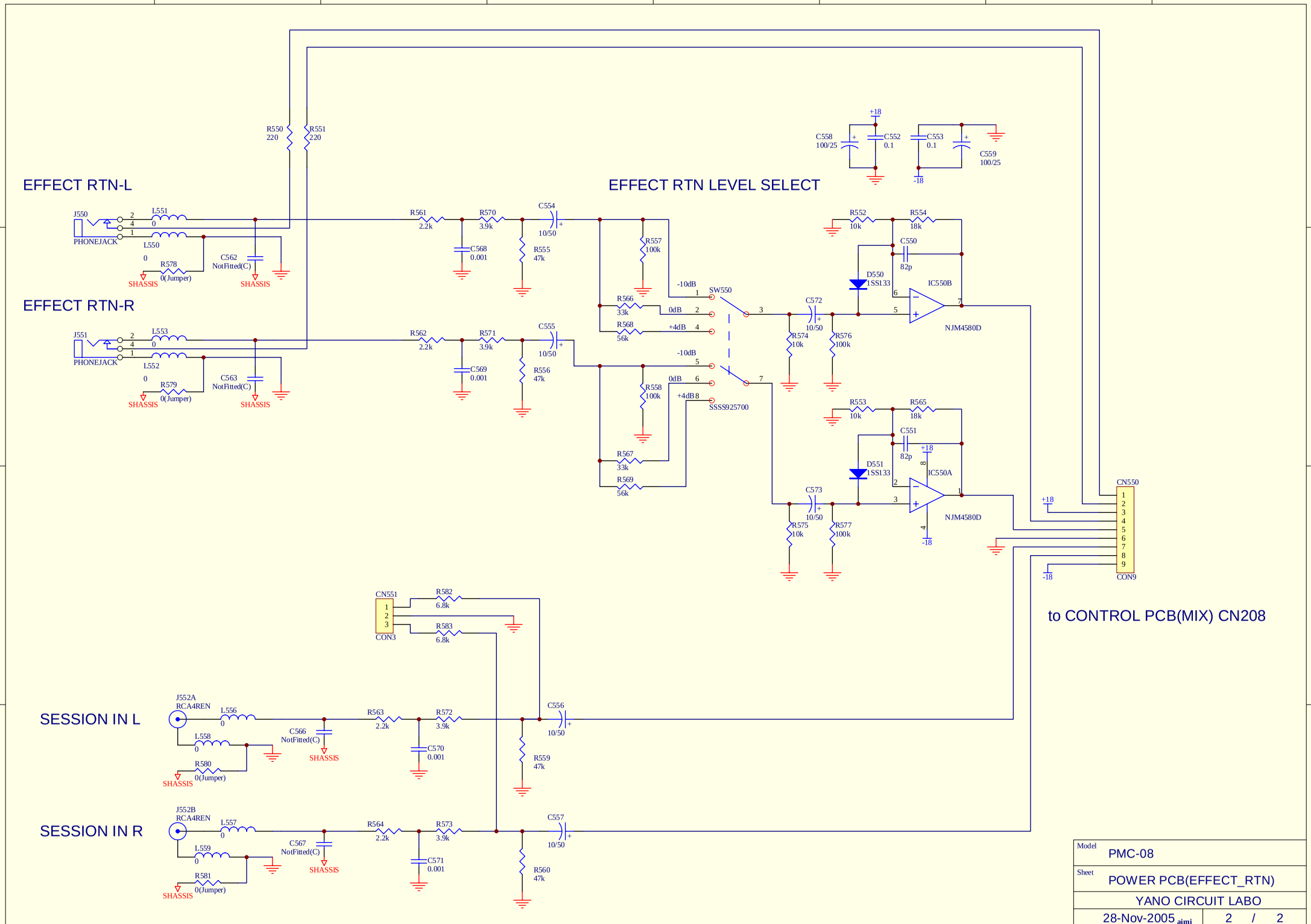

Model	PMC-08
Sheet	POWER PCB(EFFECT_RTN)
YANO CIRCUIT LABO	
28-Nov-2005 aimi	2 / 2

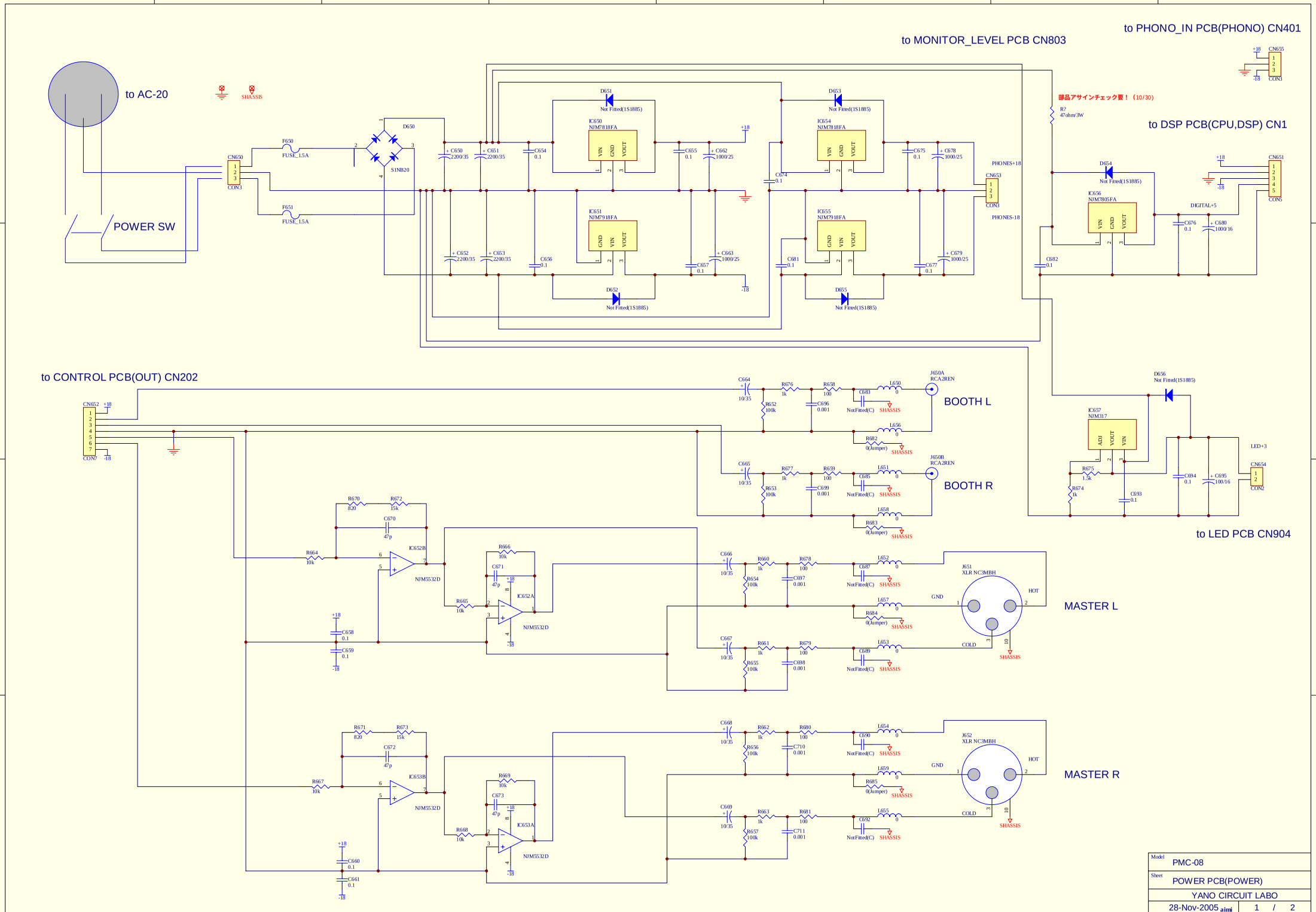

Model	PMC-08
Sheet	POWER PCB(POWER)
YANO CIRCUIT LABO	
28-Nov-2005 aimi	1 / 2

to CONTROL PCB(OUT) CN209

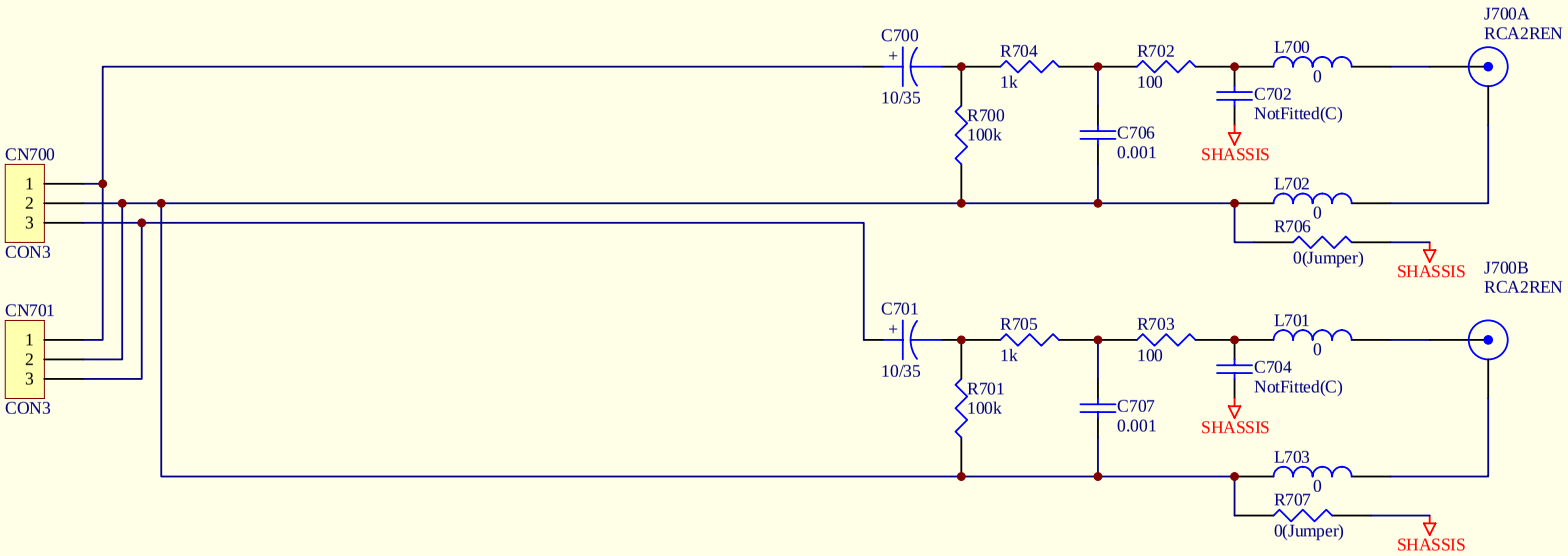

SUB MASTER L

SUB MASTER R

Model	PMC-08
Sheet	SUB_MASTER PCB
YANO CIRCUIT LABO	
28-Nov-2005	1 / 1