Vestax

FX MIDI CONTROLLER

VFX-1

SERVICE MANUAL

Vestax Corporation

Vestax Corporation
1-18-6 Wakabayashi, Setagaya-ku, Tokyo 154-0023 Japan
Phone 03-3412-7011 Fax 03-3412-7013
Web : www.vestax.com

Vestax Europe Technical Support
Rheinstr.213 D-53332 Bornheim Germany
Phone 49(0)2222-95-23-72 Fax 49(0)2222-95-23-74

PCB LAYOUT

CPU PCB

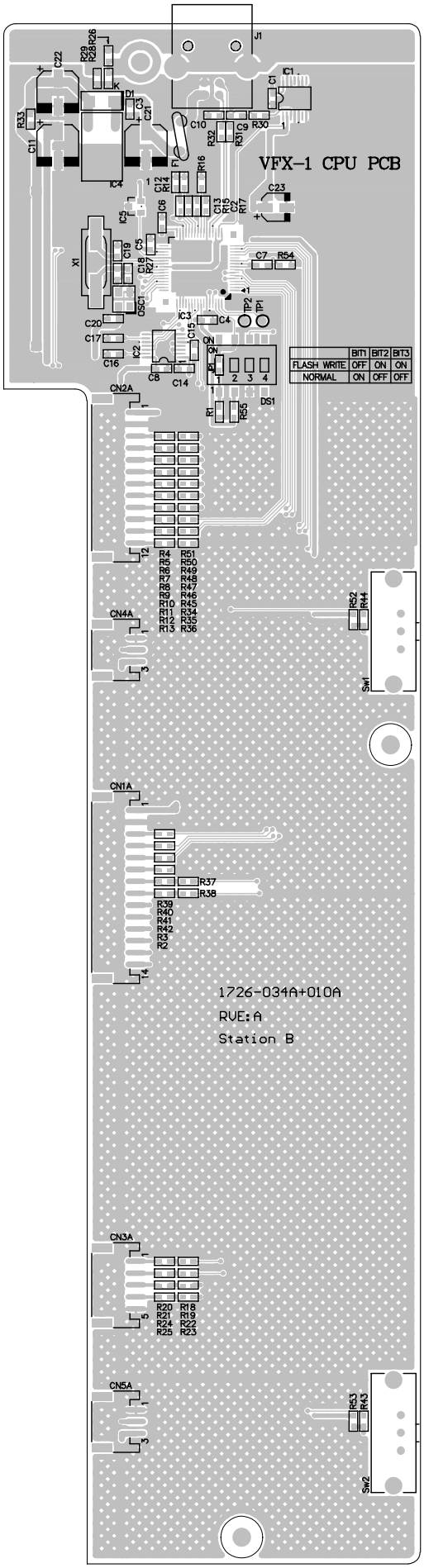

top side

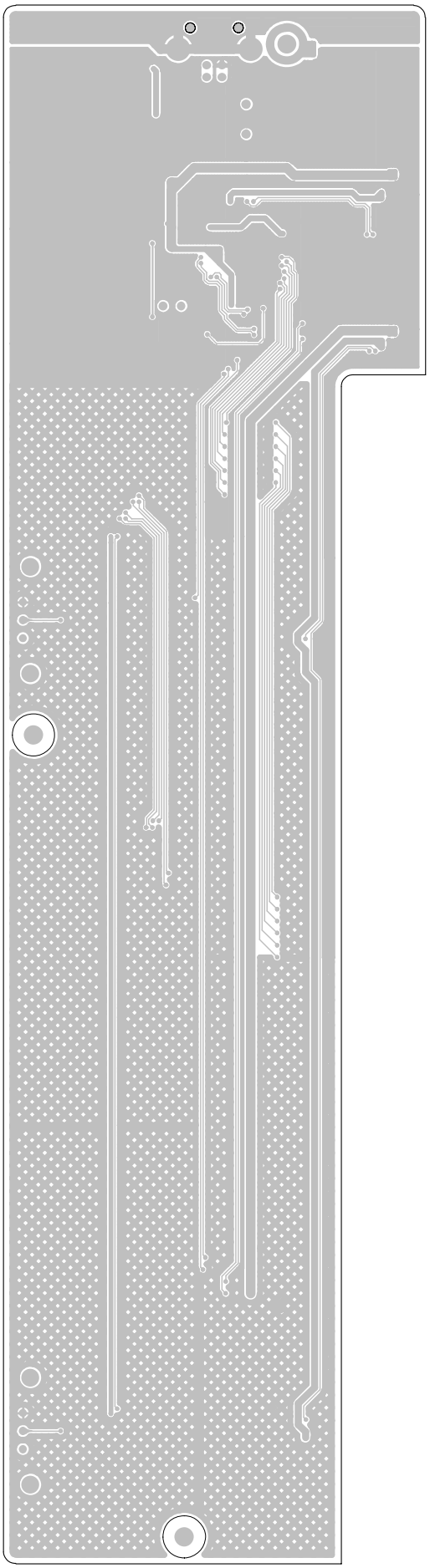

bottom side

PANEL PCB

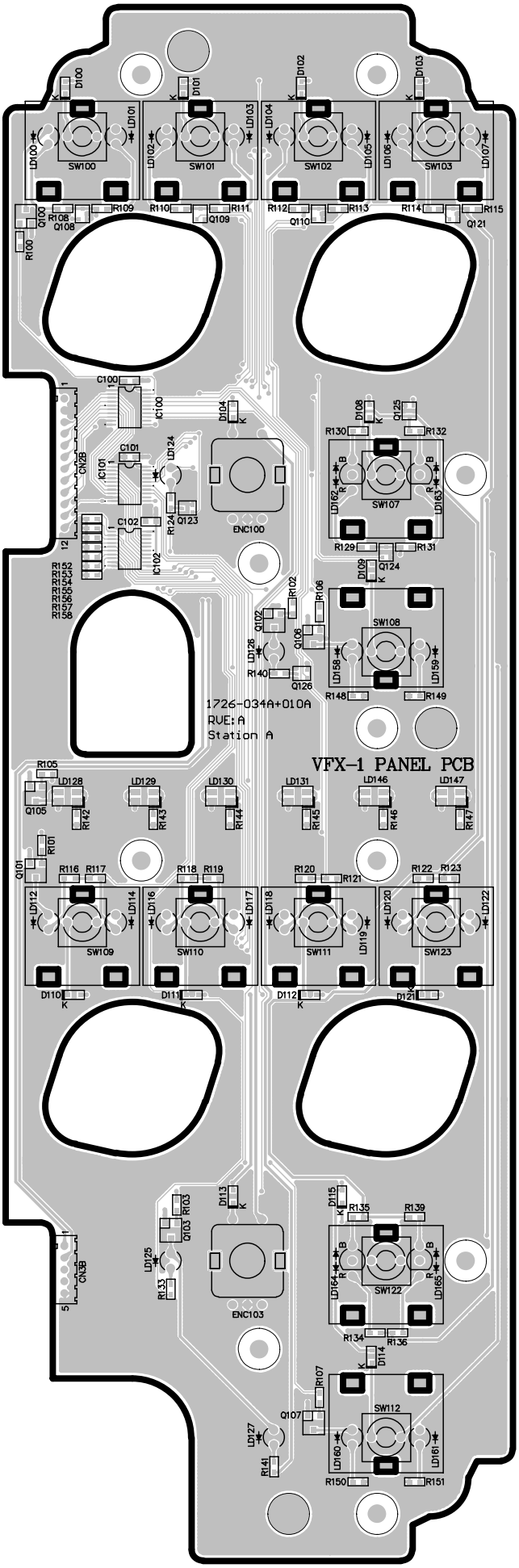

top side

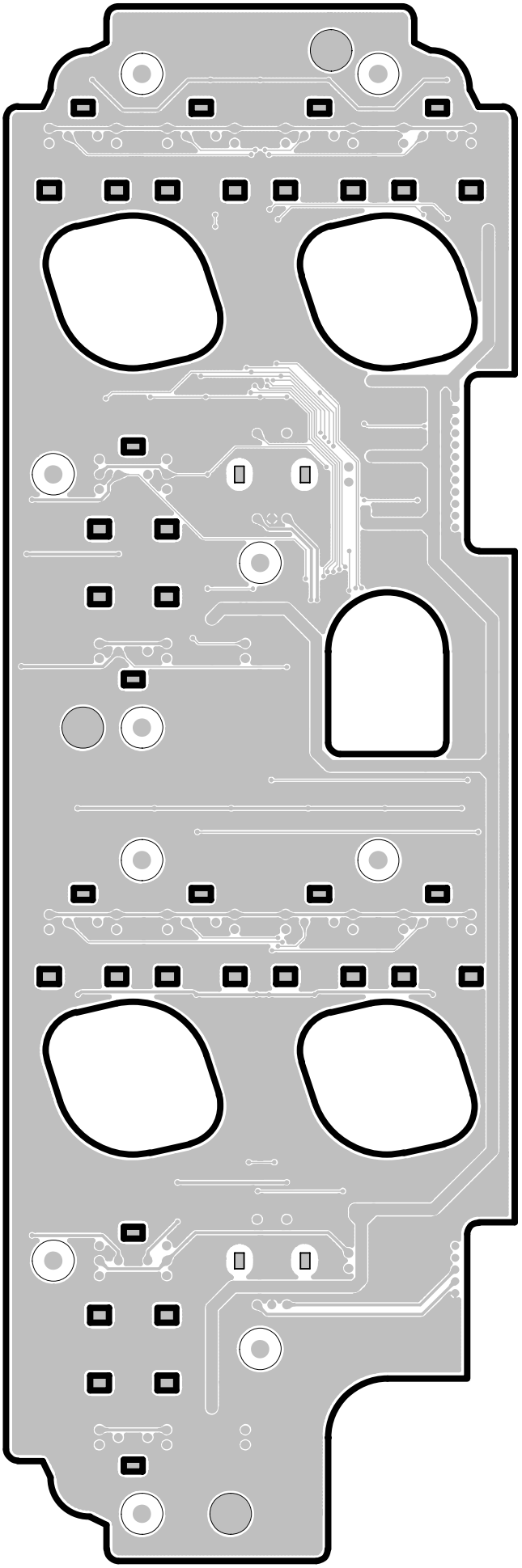

bottom side

ROTARY SW PCB

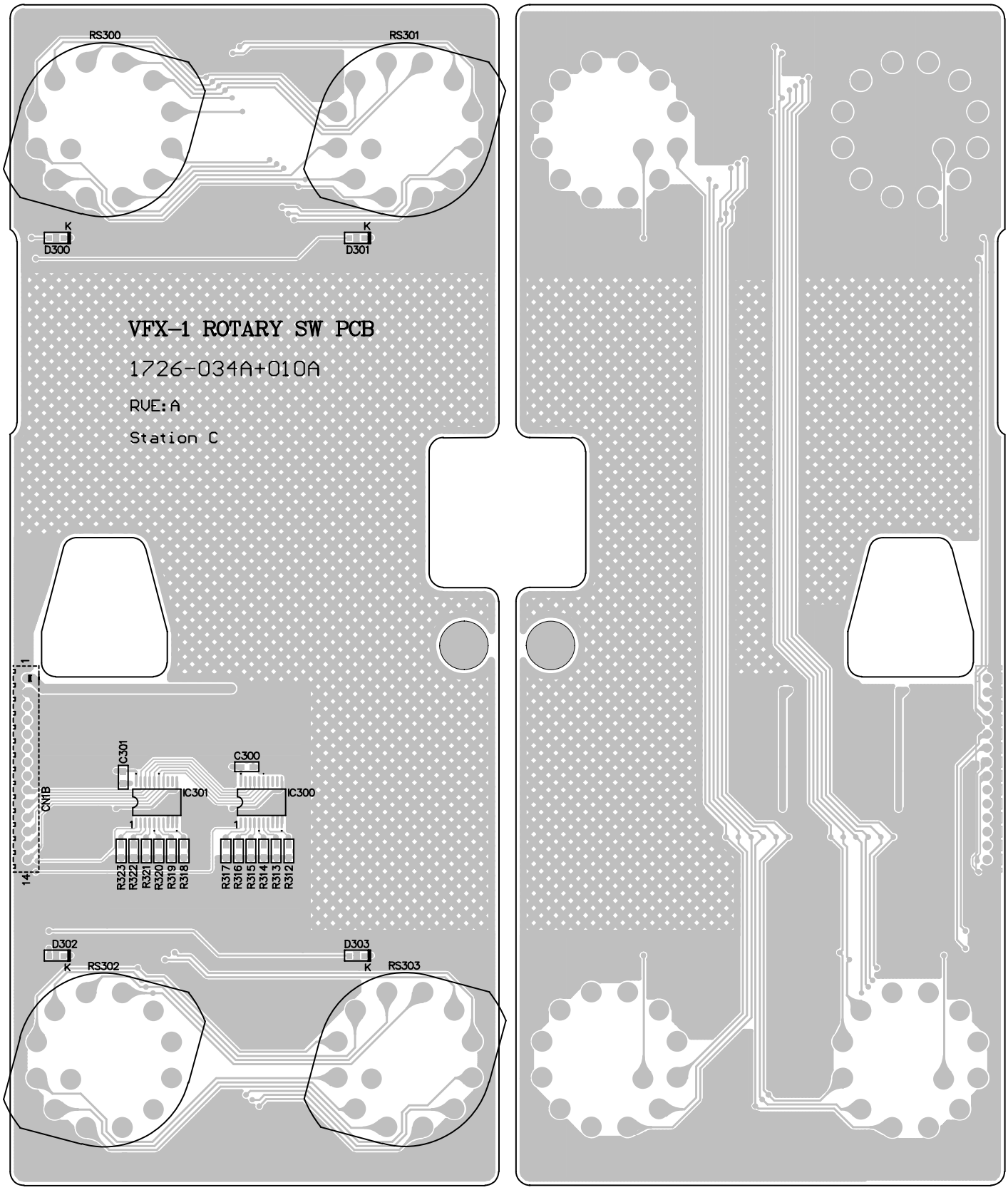

top side

bottom side

VR PCB

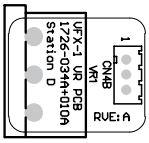

top side

bottom side

SCHEMATIC DIAGRAM

CPU

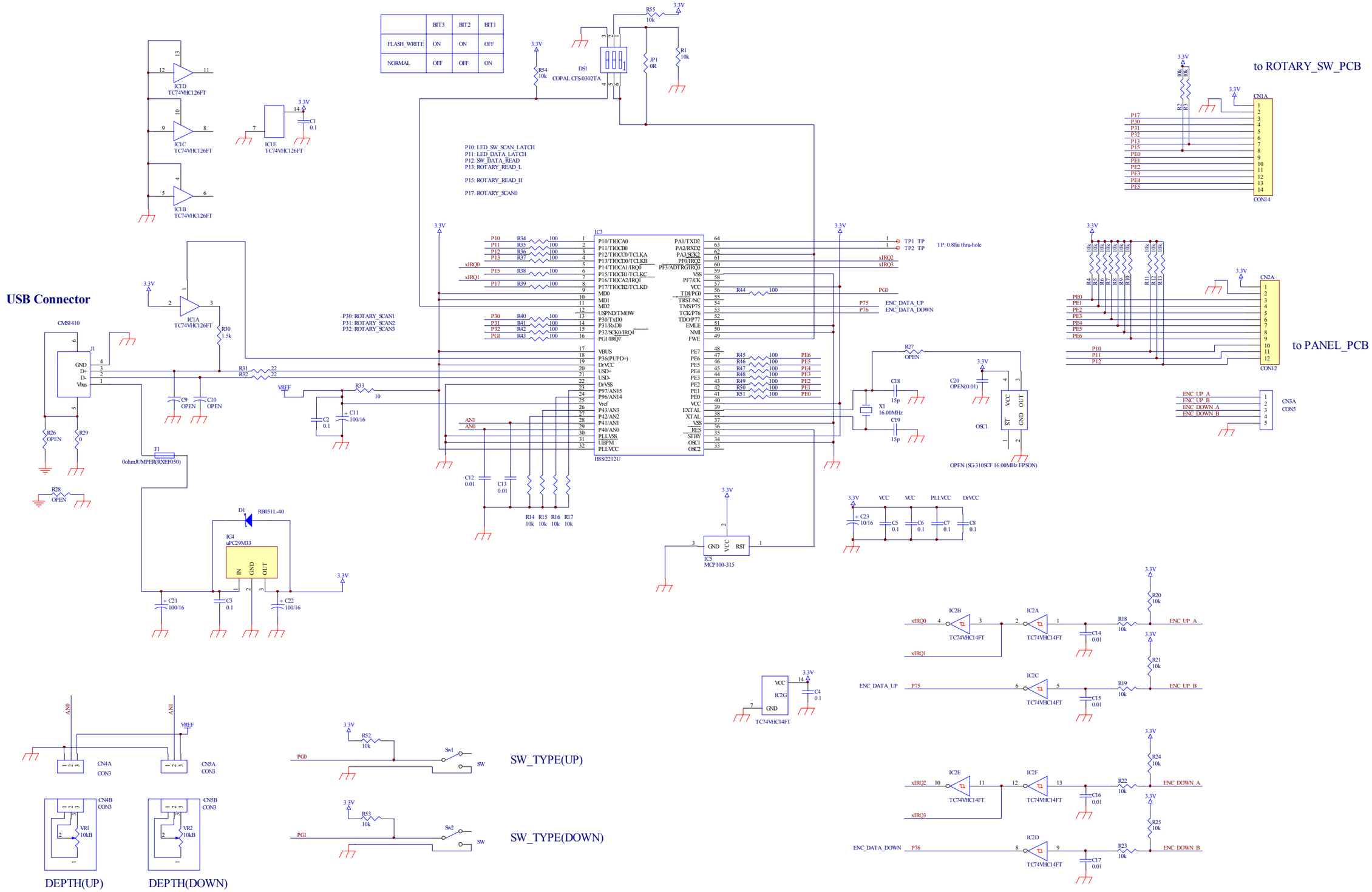

LED

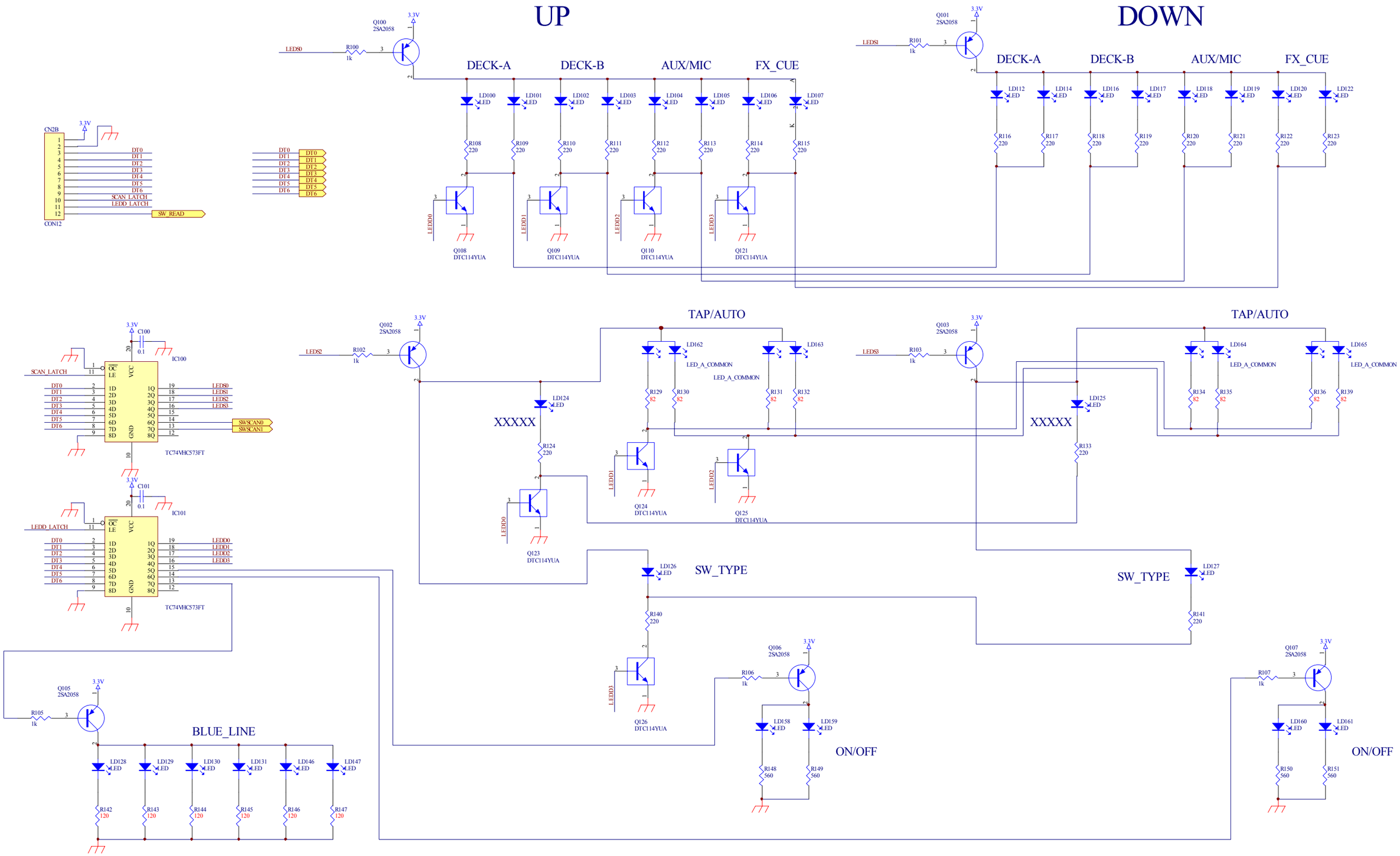
UP
DOWN
DECK-A
DECK-B
AUX/MIC
FX_CUE
TAP/AUTO
SW_TYPE
ON/OFF
BLUE_LINE
XXXXX
CN2B
CON12
IC100
IC101
TC74VHCS73FT
Q100 2SA2058
Q101 2SA2058
Q102 2SA2058
Q103 2SA2058
Q105 2SA2058
Q106 2SA2058
Q107 2SA2058
Q108 DTC114YUA
Q109 DTC114YUA
Q110 DTC114YUA
Q121 DTC114YUA
Q123 DTC114YUA
Q124 DTC114YUA
Q125 DTC114YUA
Q126 DTC114YUA
LED_A_COMMON
SCAN_LATCH
LEDD_LATCH
SW_READ
SWSCAN0
SWSCAN1

ROTARY

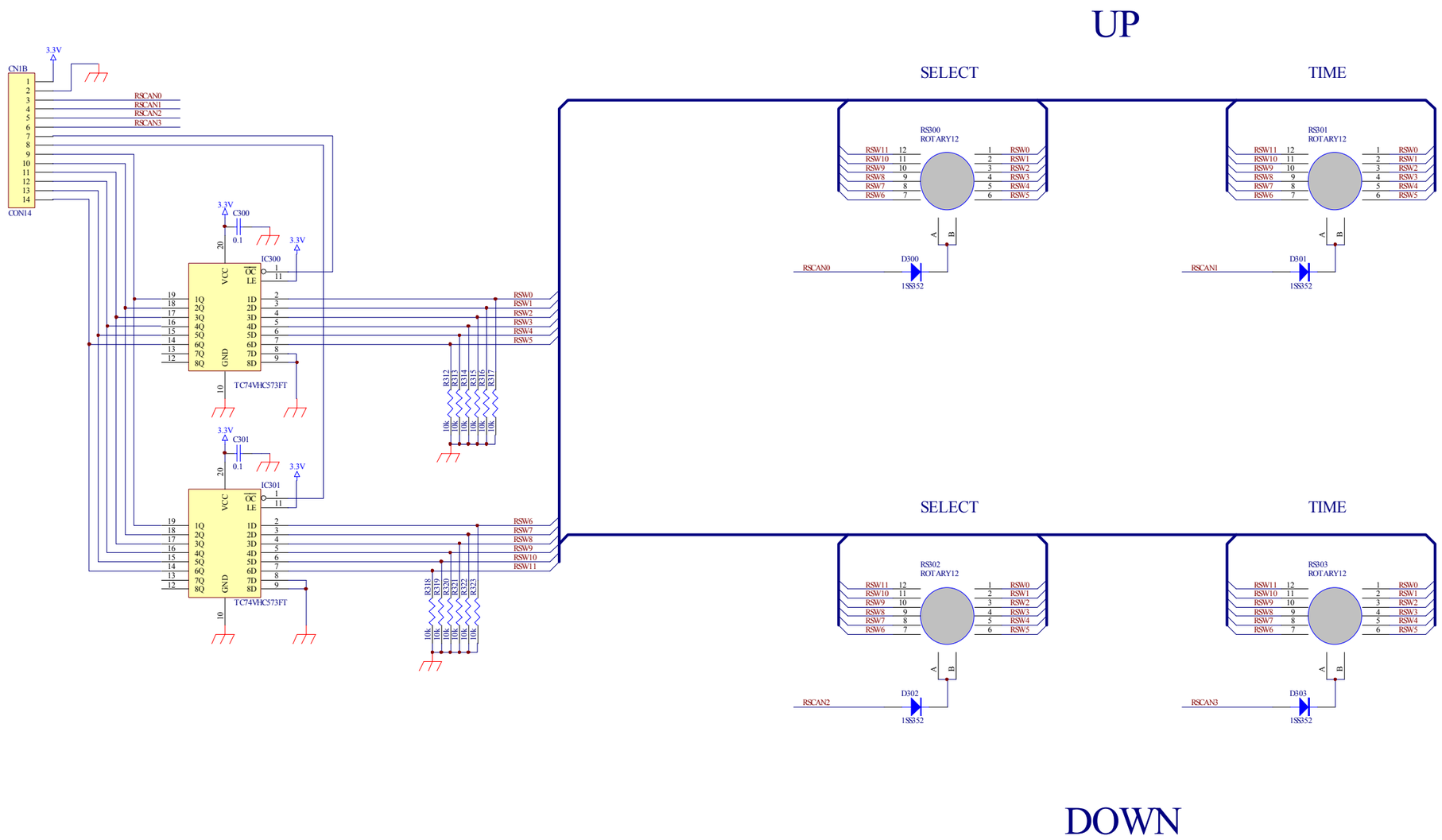
UP
SELECT
TIME
SELECT
TIME
DOWN
CN1B
CON14
RSCAN0
RSCAN1
RSCAN2
RSCAN3
3.3V
C300
C301
0.1
IC300
IC301
TC74VHCS73FT
VCC
GND
OC
LE
1Q
2Q
3Q
4Q
5Q
6Q
7Q
8Q
1D
2D
3D
4D
5D
6D
7D
8D
RSW0
RSW1
RSW2
RSW3
RSW4
RSW5
RSW6
RSW7
RSW8
RSW9
RSW10
RSW11
R312
R313
R314
R315
R316
R317
R318
R319
R320
R321
R322
R323
10k
RS300
RS301
RS302
RS303
ROTARY12
A
B
D300
D301
D302
D303
1SS352

SW

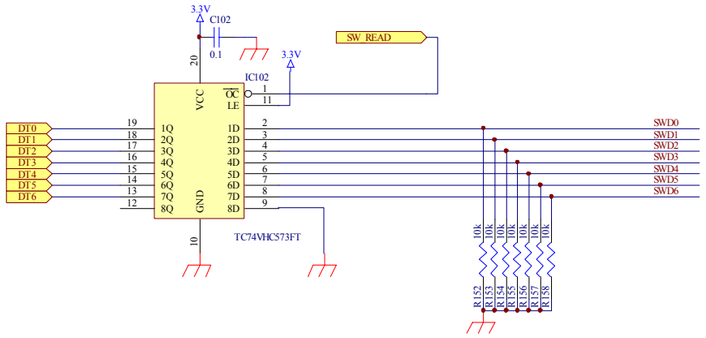
3.3V
C102
0.1
3.3V
SW_READ
IC102
TC74VHC573FT
VCC
GND
LE
OC
DT0
DT1
DT2
DT3
DT4
DT5
DT6
SWD0
SWD1
SWD2
SWD3
SWD4
SWD5
SWD6
10K
R152
R153
R154
R155
R156
R157
R158

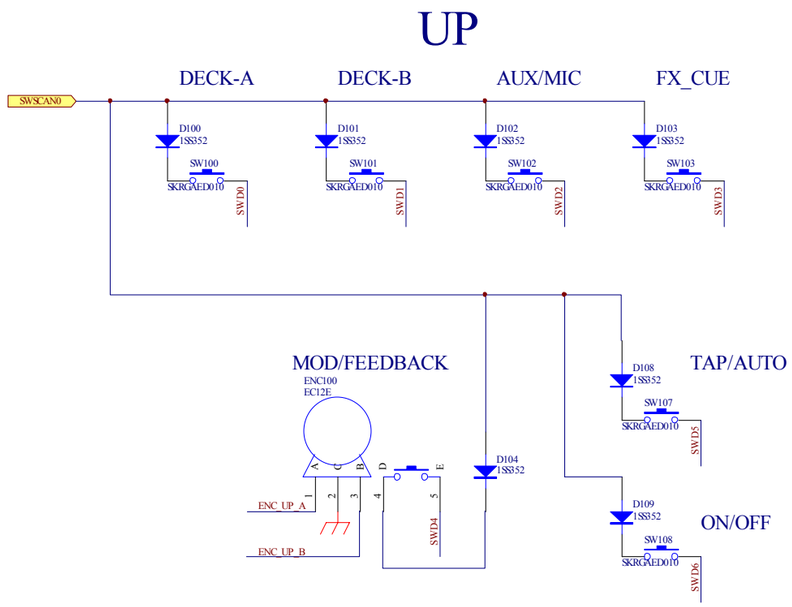
UP
DECK-A
DECK-B
AUX/MIC
FX_CUE
SWSCAN0
D100
D101
D102
D103
1SS352
SW100
SW101
SW102
SW103
SKRGAED010
SWD0
SWD1
SWD2
SWD3
MOD/FEEDBACK
ENC100
EC12E
ENC_UP_A
ENC_UP_B
SWD4
D104
D108
D109
TAP/AUTO
ON/OFF
SW107
SW108
SWD5
SWD6

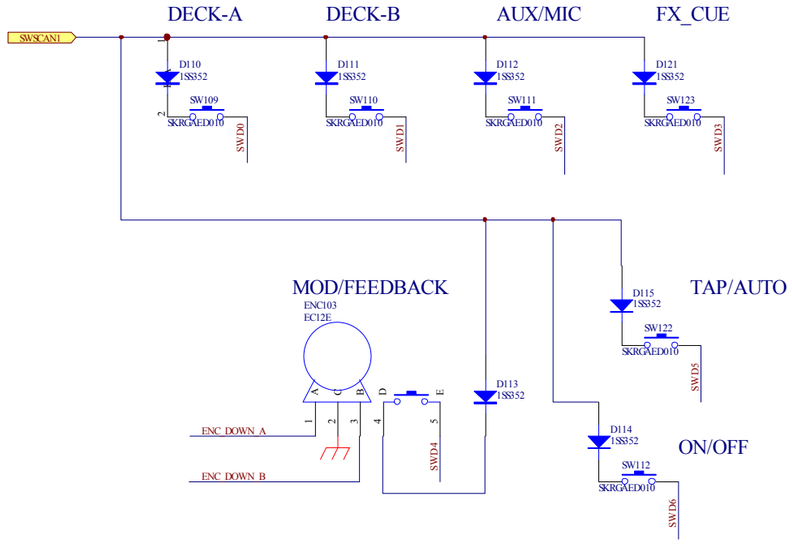
DECK-A
DECK-B
AUX/MIC
FX_CUE
SWSCAN1
D110
D111
D112
D121
1SS352
SW109
SW110
SW111
SW123
SKRGAED010
SWD0
SWD1
SWD2
SWD3
MOD/FEEDBACK
ENC103
EC12E
ENC_DOWN_A
ENC_DOWN_B
SWD4
D113
D115
D114
TAP/AUTO
ON/OFF
SW122
SW112
SWD5
SWD6
DOWN

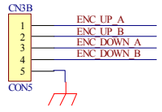
CN3B
CON5
ENC_UP_A
ENC_UP_B
ENC_DOWN_A
ENC_DOWN_B

ELECTRICAL PART LIST

Location	Part Number	Description
PCB ASSY CPU COM		
	PCB-VFX01+CPU	PCB ASSY CPU COM
PC BOARD		
B	1726-034A+010A	PCB PANEL/RSW/VR/CPU HAL
CAPACITOR		
C1	150F-104K+P-AC	CC 50V 0.1uF 10%
C11	157D-107M+3-MJ	CE 16V 100uF 20% SM
C12, C13, C14, C15, C16, C17	150F-103K+P-AC	CC 50V 0.01uF 10% 0603
C18, C19	150F-150K+P-AC	CC 50V 15pF 10%
C2	150F-104K+P-AC	CC 50V 0.1uF 10%
C20	150F-103K+P-AC	CC 50V 0.01uF 10% 0603
C21, C22	157D-107M+3-MJ	CE 16V 100uF 20% SM
C23	157D-106M+3-GJ	CE 16V 10U 20% SMD 4X5.4
C3, C4, C5, C6, C7, C8	150F-104K+P-AC	CC 50V 0.1uF 10%
DIODE		
D1	4800-51L0+6	DIODE SCHOTTKY 40V 3A
JACK/SOCKET		
J1	2113-3212+0	JACK USB 4P 90DEG
CRYSTAL		
X1	2300-2280+0	CRYSTAL 16MHZ SMD
RESISTOR		
R33	4723-100J+P-R	RMG 1/16W 10R 5% 0603
R34, R35, R36, R37, R38, R39, R40, R41, R42, R43, R44, R45, R46, R47, R48, R49, R50, R51	4723-101J+P-R	RMG 1/16W 100R 5% 0603
R1, R10, R11, R12, R13, R14, R15, R16, R17, R18, R19, R2, R20, R21, R22, R23, R24, R25, R3, R4, R5, R52, R53, R54, R55, R6, R7, R8, R9	4723-103J+P-R	RMG 1/16W 10K 5% 0603
R30	4723-152J+P-R	RMG 1/16W 1.5K 5% 0603
R31, R32	4723-220J+P-R	RMG 1/16W 22R 5% 0603
R29	4723-000A+P	RMG 1/16W 0R 1% 0603
IC		
IC1	3132-7160+0	IC ASIC TC74VHC126FT
IC2	3132-7180+0	IC ASIC TC74VHC14FT
IC3	3132-7101+0-28	IC MCU H8S/2212U FP-64E
IC4	3132-7300+0-21	IC REGULATOR UPC29M33AT
IC5	3132-4481+0	IC RESET MCP100T-315I/TT
SWITCH		
SW1, SW2	5200-4998+0	SWITCH SLIDE 1P2T 3MM
F1	8910-0302+0	POLYSWITCH RXEF050

Location	Part Number	Description
MISCELLANEOUS		
	3005-5361+0	RIBBON 60MMX300M BLACK
CN1A	2101-3282+0	CONNECTOR WAFER 14P P2.0
CN2A	2101-3283+0	CONNECTOR WAFER 12P P2.0
CN3A	2101-3247+0	WAFER 5P P2.0 RA SMD M
CN4A, CN5A	2101-3244+0	WAFER 3P P2.0 RA SMD M
label	3000-9812+0	BLANK LABEL (5X10)
software	312A-0860+01	SOFTWARE MCU VER B
PCB ASSY PANEL COM		
	PCB-VFX01+PANEL	PCB ASSY PANEL COM
PC BOARD		
A	1726-034A+010A	PCB PANEL/RSW/VR/CPU HAL
CAPACITOR		
C100, C101, C102	150F-104K+P-AC	CC 50V 0.1uF 10%
DIODE		
D100, D101, D102, D103, D104, D108, D109, D110, D111, D112, D113, D114, D115, D121	480S-3520+3	DIODE 1SS352(TPH3/F) SMD
TRANSISTOR		
Q100, Q101, Q102, Q103, Q105, Q106, Q107	4852-0580+3	TR PNP 2SA2058 HFE: 125
Q108, Q109, Q110, Q121, Q123, Q124, Q125, Q126	4854-YUA0+3	TR NPN DTC114YUA HFE: -1
RESISTOR		
R152, R153, R154, R155, R156, R157, R158	4723-103A+P-R	RMG 1/16W 10K 1% 0603
R100, R101, R102, R103, R105, R106, R107	4723-102A+P	RMG 1/16W 1K 1%
R108, R109, R110, R111, R112, R113, R114, R115, R116, R117, R118, R119, R120, R121, R122, R123, R124	4723-221A+P	RMG 1/16W 220R 1%
R129, R130, R131, R132	4723-820A+P	RMG 1/16W 82R 1% 0603
R133	4723-221A+P	RMG 1/16W 220R 1%
R134, R135, R136, R139	4723-820A+P	RMG 1/16W 82R 1% 0603
R140, R141	4723-221A+P	RMG 1/16W 220R 1%
R142, R143, R144, R145, R146, R147	4723-121J+P	RMG 1/16W 120R 5%
r148, r149, r150, r151	4723-121A+P-R	RMG 1/16W 120R 1% 0603
LED		
LD100, LD101, LD102, LD103, LD104, LD105	3700-1643+Y	LED SC 3X5X24 YL HIGH
LD106, LD107	3700-1647+R	LED SC 2.8X4.6X27 RD
LD112, LD114, LD116, LD117, LD118, LD119	3700-1643+Y	LED SC 3X5X24 YL HIGH
LD120, LD122	3700-1647+R	LED SC 2.8X4.6X27 RD
LD124, LD125, LD126, LD127	3700-2522+R	LED 3MM RED
LD128, LD129, LD130, LD131, LD146, LD147	3700-7854+B	LED SMD 3.5X2.8X1.9 BL
LD158, LD159, LD160, LD161	3700-1648+B	LED SC 3X5.5X24 BL SUPER
LD162, LD163, LD164, LD165	3700-1653+RB	LED SC 3X5X24.5 RD/BL

Location	Part Number	Description
SWITCH		
SW100, SW101, SW102, SW103, SW107, SW108, SW109, SW110, SW111, SW112, SW122, SW123	5200-4979+0-01	SWITCH TACT SPST 7.8X7.8
MISCELLANEOUS		
CN2B	7013-1500+0	WIRE-CONN 12P P2.0 #28
CN3B	7013-1490+0	WIRE-CONN 5P P2.0 #28
ENC100, ENC103	5200-4980+0-01	ENCODER ROTARY DPDT
IC100, IC101, IC102	3132-7951+0	IC LATCH TC74VHC573FT
LD124-1, LD125-1, LD126-1, LD127-1	4172-0050+0	LED HOLDER 8MM BLACK
PCB ASSY RSW COM		
	PCB-VFX01+RSW	PCB ASSY RSW COM
PC BOARD		
C	1726-034A+010A	PCB PANEL/RSW/VR/CPU HAL
CAPACITOR		
C300, C301	150F-104K+P-AC	CC 50V 0.1uF 10%
DIODE		
D300, D301, D302, D303	480S-3520+3	DIODE 1SS352(TPH3/F) SMD
RESISTOR		
R312, R313, R314, R315, R316, R317, R318, R319, R320, R321, R322R, R323	4723-103A+P-R	RMG 1/16W 10K 1% 0603
IC		
IC300, IC301	3132-7951+0	IC LATCH TC74VHC573FT
SWITCH		
RS300, RS301, RS302, RS303	5200-4999+1	SWITCH ROTARY 1P12T
MISCELLANEOUS		
CN1B	7013-1510+0	WIRE-CONN 14P P2.0 #28
PCB ASSY VR COM		
	PCB-VFX01+VR	PCB ASSY VR COM
PC BOARD		
D	1726-034A+010A	PCB PANEL/RSW/VR/CPU HAL
VR		
VR1, VR2	4751-207A+0	VR ROTARY 10KBX1 20% V
MISCELLANEOUS		
CN4B, CN5B	7013-1480+0	WIRE-CONN 3P P2.0 #28

EXPLODED VIEW • PARTS LIST

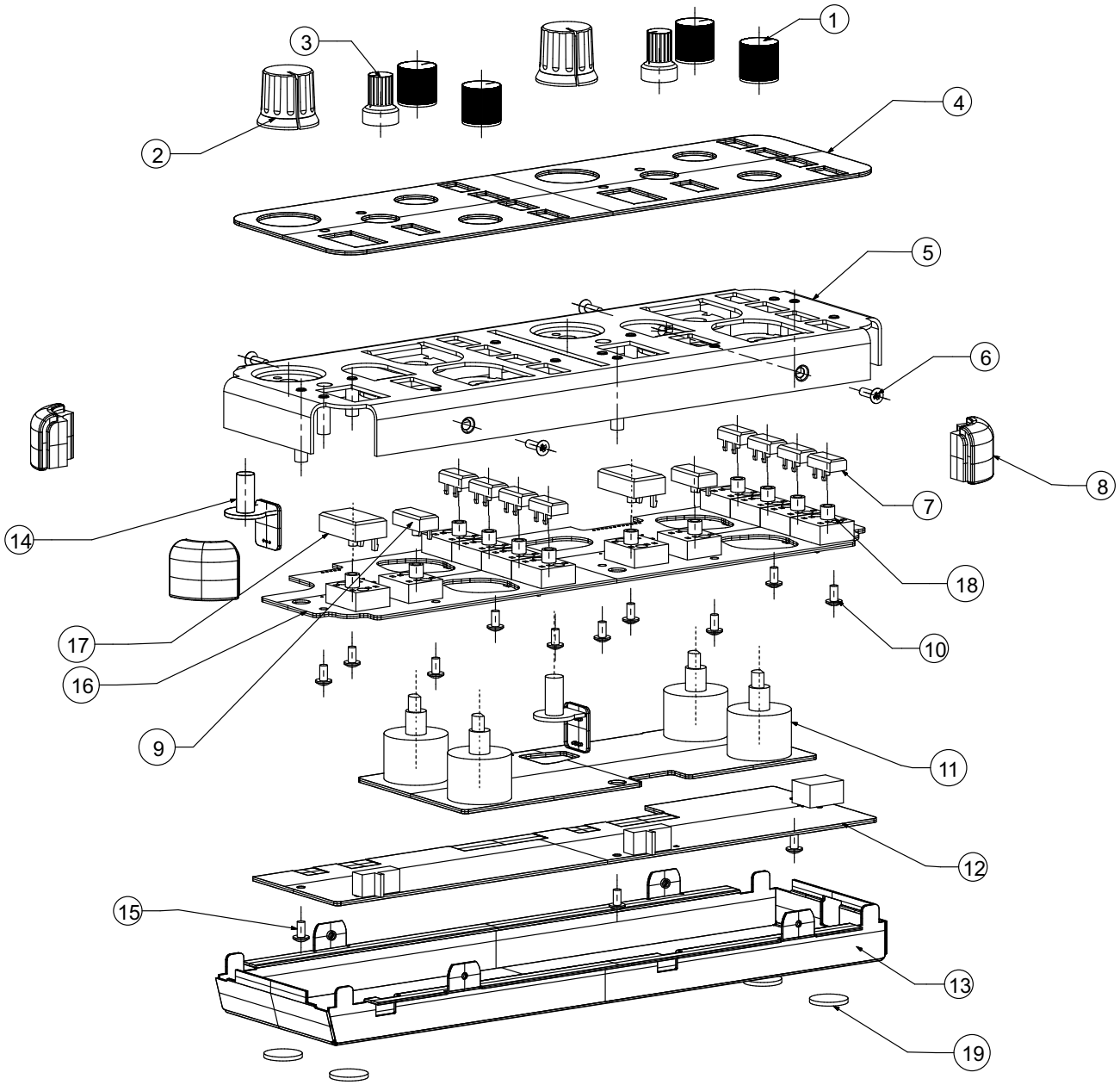

ITEM	DESCRIPTION	PART NO.	QTY.
1	KNOB-ROTARY	2447-8901+0	4
2	KNOB-ROTARY24X 21.2	2444-8701+0	2
3	KNOB-ROTARY D-SHAFT	2446-6726+0	2
4	PANEL-FRONT	1468-6501+0	1
5	BRACKET-FAONT AL	4135-9431+0	1
6	M3X8	2901-3008+3000	4
7	BUTTON-LOA15X8	2447-9201+0	8
8	RUBBER CORNER	4157-1511+0	4
9	BUTTO-LOA18X9	2447-9101+0	2
10	SCREW M3X6	2904-3006+3000	10
11	ROTARY SW PCB ASSY	PCB-VFX01+RSW	1
12	CPU PCB ASSY	PCB-VFX01+CPU	1
13	CHASSIS-BOTTOM	1407-3701+0	1
14	VR PCB ASSY	PCB-VFX01+VR	2
15	SCREW M3X6	2904-3006+3000	3
16	PANEL PCB ASSY	PCB-VFX01+PANEL	1
17	BUTTON 24X15 PC	2447-8000+0	2
18	GUIDER-BUTTON POM	4155-3641+0	12
19	RUBBER FOOT D14.5X3	4157-1681+0	4

PACKING

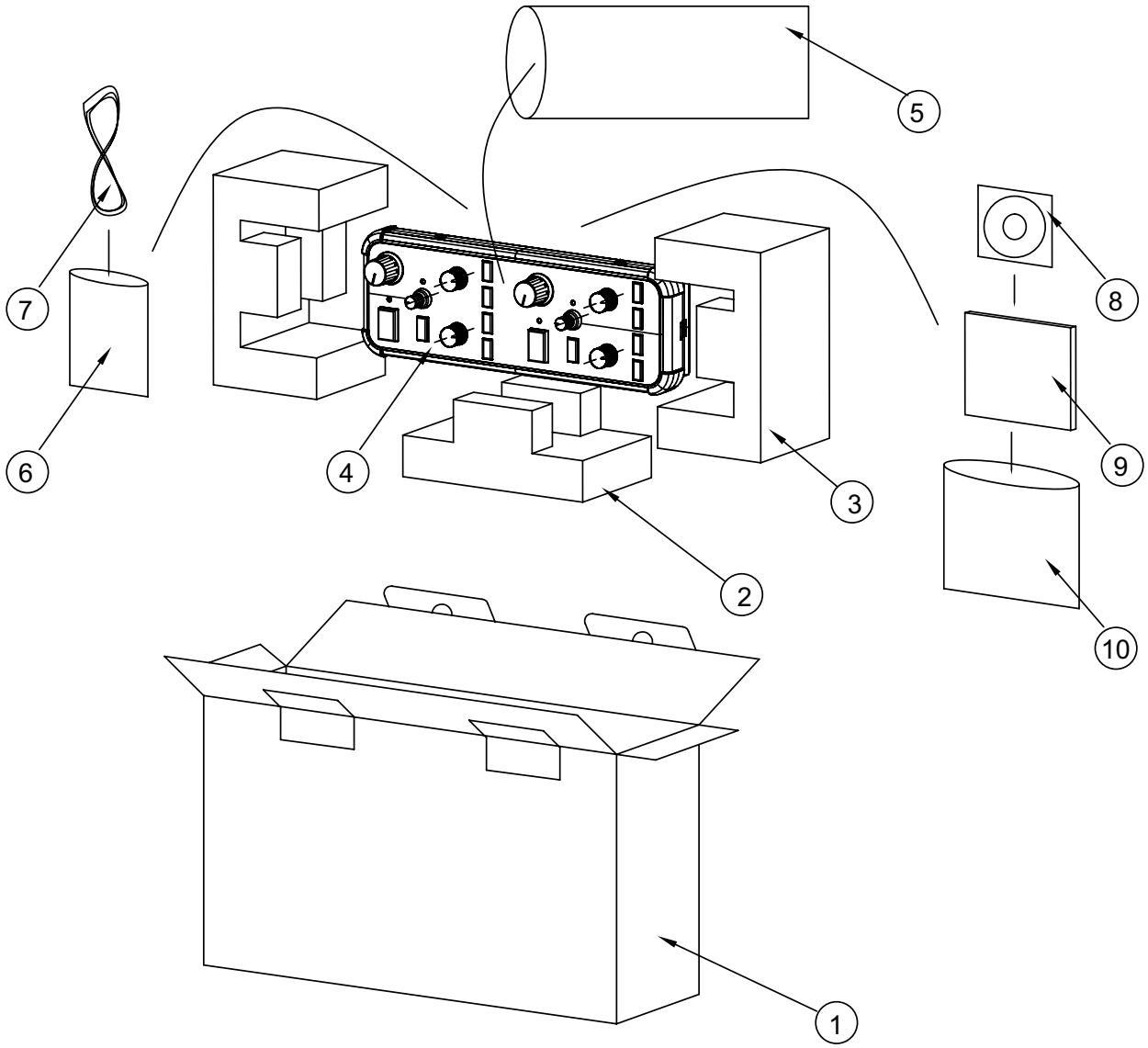

ITEM	DESCRIPTION	PART NO.	QTY.
1	GIFT BOX	1481-5901+1	1
2	INNER PAD BOTTOM	1451-0470+0	1
3	INNER PAD SIDE	1451-0480+0	2
4	VFX-1 UNIT		1
5	P.BAG	1497-5332+0	1
6	P.BAG	1497-4032+0	1
7	WIRE-SHIELD 4P #28-1P/24	7013-1140+0	1
8	CD	4115-0020+0	1
9	MANUAL	4301-7363+0	1
10	POLYBAG	1497-1202+0	1

Vestax Corporation

Vestax Corporation
1-18-6 Wakabayashi, Setagaya-ku, Tokyo 154-0023 Japan
Phone 03-3412-7011 Fax 03-3412-7013
Web : www.vestax.com

Vestax Europe Technical Support
Rheinstr.213 D-53332 Bornheim Germany
Phone 49(0)2222-95-23-72 Fax 49(0)2222-95-23-74

Rev.01 - Nov.04, 2009