# VESTAX

## SERVICE NOTE

## MODEL: VCM - 100



Vestax Corporation Service Department

(2008-07-02)

**VESTAX CORP. TOKYO**
**info@vestax.com**
**VESTAX SERVICE EUROPE**
**RHEINSTR. 213**
**53332 BORNHEIM/GERMANY**
**Tel. +49 2222 952372**
**Fax +49 2222 952374**
**tech@vestax.com**

# IMPORTANT SAFEGUARDS

## READ BEFORE OPERATING EQUIPMENT

This product was designed and manufactured to meet strict quality and safety standards. There are, however, some installation and operation precautions which you should be particularly aware of.

1. Read instructions-All the safety and operating instructions should be read before the appliance is operated.

2. Retain instructions-The safety and operating instructions should be retained for future reference.

3. Heed Warnings-All warnings on the appliance and in the operating instructions should be adhered to.

4. Follow Instructions-All operating and use instructions should be followed.

5. Cleaning-Do not use liquid cleaners or aerosol cleaners. Use a damp cloth for cleaning.

6. Attachments-Do not use attachments not recommended by the product manufacturer as they may cause hazards.

7. Water and Moisture-Do not use this product near water-for example, near a bath tub, wash bowl, kitchen sink, or laundry tub, in a wet basement, or near a swimming pool, and the like.

8. Accessories-Do not place this product on an unstable cart, stand, tripod, or table. The product may fall, causing serious injury to a child or adult, and serious damage to the appliance. Use only with a cart,. stand, tripod, bracket, or table recommended by the manufacturer, or sold with product. Any mounting of the appliance should follow the manufacturer's instructions, and should use a mounting accessory recommended by the manufacturer.

9. This product should never be placed near or over a radiator or heat register. This product should not be placed in a built-in installation such as a bookcase or rack unless proper ventilation is provided or the manufacturer's instructions have been adhered to.

10. Power sources-This product should be operated only from the type of power source indicated on the marking label. If you are not sure of the type of power supply to your home, consult your appliance dealer or local power company.

11. Lightning-For added protection of this product during a lightning storm, or when it is left unattended and unused for long periods of time, unplug it from the wall outlet. This will prevent damage to the product due to lightning and power-line surges.

12. Overloading-Do not overload wall outlets and extension cords as this can result in a risk of fire or electric shock.

13. Object and Liquid Entry-Never push objects of any kind into this product through openings as they may touch dangerous voltage points or short-out parts that could result in a fire or electric shock. Never spill liquid of any kind on the product.

14. Servicing-Do not attempt to service product yourself as opening or removing covers may expose you to dangerous voltage or other hazards. Refer all servicing to qualified personnel.

# Features

The VCM-100 is a compact USB MIDI & audio system, designed with Vestax's mechatronics technology developed in the past 30 years. Despite its compact size, the VCM-100 comes with 4in4out(Stereo x 2 in/out)connection, headphone output and high quality mechanical parts placed in the control section. Having every feature fitted in to a solid metal body smaller than a standard laptop, the VCM-100 is easy to use and transportation friendly, which makes it the simple all-in-one USB audio interface that every PRO wants.

- 40 parameters of various software are assignable to the VCM-100's control section via USB MIDI IN/OUT.

- The DATA SEND LED provides clear visual of the current status to assist in an authentic play mode in real time.

- Monaural 4 in/ Stero 2 out (Master out L.R, Monitor/Booth out L.R), Headphone output. The VCM-100 provides a high definition sound, thanks to the audio codec IC designed with a built-in hardware sample rate converter, delta-sigma conversion 20bit stereo D/A converter and 18bit stereo A/D converter.

- ESI(Ego systems Inc) designed ASIO driver apllied for its proven high reliablity.DAW application software and DJ application software work with the driver at a valiant low latency rate and high performance. (Windows will identify the VCM-100 as a 2in2out USB audio device when using the standard Windows WDM driver. Use the ASIO driver when using multi input/output with DTM application software. )

- The VCM-100 provides simple plug & play features working with Apple and Windows computers.

- The power source is selectable from USB bus-power and the exclusive power adaptor(not included). (For best performance and stable operation, please use the power adaptor if the computer's power capacity is low or if using a USB hub)

- There are no issues if you don't have any software to operate. TRAKTOR LE (Native Instrument Inc.) is bundled to the VCM-100 with exclusive control assignment files.

- Compatible with all software that allows MIDI control assignment. 3 versions of firmware can be selected to have the best match with the software. Each software's samples of MIDI control assignment files will be available at www.vestax.com soon.

- Support for ASIO 2.0, CoreAudio and MME / WDM, the VCM-100 is compatible to all major music and DJ and DAW applications.

- The compact metal body is thin but highly durable, and convenient for transportation.

# 1. Minimum system requirements

## a) Operating System

●Windows

Requires Windows XP Service Pack 2. Does not support Windows 2000/98/Me

NOTE: DO NOT connect to a Windows 2000 Professional computer. The screen will turn blue screen and the computer will freeze.

●Macintosh

Supports Mac OS X 10.3.9 / 10.4.7. Does not support previous system versions.

Multi client environments that operate the VCM-100 with more than 1 software are not supported.

## b) Hardware

●Windows

CPU: Pentium III 500 MHz (Advanced CPU required for laptops)
Memory: 256MB RAM
USB 1.0/2.0 Interface

●Macintosh

CPU: Macintosh G3 600/G4 667MHz (Advanced CPU required for laptops)
Memory: 256MB RAM
USB 1.0/2.0 Interface

・These minimum system requirements are for the VCM-100 hardware. If the software's system requirements are higher than the VCM-100, please prepare an advanced operating system qualified.

・Macintosh CPU accelerator cards are not supported. The computer must have USB connection.

・The VCI-100 will not operate if the sound device is a YAMAHA AC-XG Audio Device.

＊Above are minimum requirements and does not guarantee performance for all computers and devices.

# 2. Install and Operation

The VCM-100 is capable of transmitting sound signals in high resolution. Sufficient operation is provided with minimum system requirement, but systems with more advanced components are generally recommended to gain its best performance.

## (1) Windows XP

1.Set the power select switch on the rear panel to AC ADAPTOR when using the exclusive AC adaptor. Set to USB POWER if using USB connection to provide power from your computer.
NOTE: Please use the exclusive power adaptor for stable operation if the USB is connected to a non-powered USB hub or if the computer does not have enough power capacity.

2.Connect the VCM-100 to the computer via USB.
The power LED, control switch LED will light up.
A window will pop up and say a new device has been detected and drivers for Vestax PC-CONTROLLER, USB combined device and USB audio device will be installed automatically. (The message may not pop up if the driver is installed or if it's not the first time to be connected.)
CAUTION : The VCM-100 may not operate if connected to a different USB port from when the MAYA44 dirver was installed. Make sure to connect the VCM-100 to the same USB port at all times.

3.The Data send LED will blink along with each movement of the VCM-100 to indicate the output of the control signals when the drivers have been installed perfectly.

4.To check connection status in Windows XP, view [control panel] > [system] > [hardware] > [device manager] > inside USB controller find [USB combined device] (Property: Location: Vestax PC CONTROLLER) > inside sound, video and game controller find [USB Audio device] (Property: Location: Vestax PC-CONTROLLER). If both are displayed and the status is "This device is installed normally", the VCI-100 and computer is connected normally.

## (2) Macintosh

1.Set the power select switch on the rear panel to AC ADAPTOR when using the exclusive AC adaptor. Set to USB POWER if using USB connection to provide power from your computer.

NOTE: Please use the exclusive power adaptor for stable operation if the USB is connected to a non-powered USB hub or if the computer does not have enough power capacity.

2.Connect the VCM-100 to the computer via USB.
The power LED, control switch LED will light up.
A window will pop up and say a new device has been detected and drivers for Vestax PC-CONTROLLER, USB combined device and USB audio device will be installed automatically. (The message may not pop up if the driver is installed or if it's not the first time to be connected.)

CAUTION : The VCM-100 may not operate if connected to a different USB port from when the MAYA44 dirver was installed. Make sure to connect the VCM-100 to the same USB port at all times.

3.The Data send LED will blink along with each movement of the VCM-100 to indicate the output of the control signals when the drivers have been installed perfectly.

4.To check the connection status in Macintosh, view [Applications] > [Utilities] > [Audio MIDI setting] > [MIDI device] and find "Vestax PC-CONTROLER". The property shall show,
Device: Vestax PC CONTROLLER
Manufacturer: Vestax
Model: Vestax PC-CONTROLLER
The computer and the VCM-100 are connected normally if the information above is shown.

## (3) Software

MIDI compliant software is required to be installed to your computer to use the VCM-100. The VCM-100 is bundled with pre-control assigned Native Instruments Inc., TRAKTOR LE. If you do not have MIDI compliant DJ software, voluntarily install TRAKTOR 3 LE by following instructions and checking the system requirements.

## (4)Driver Installation

After the connection of MAYA44 USB, the operating system automatically detects it as a new hardware device. Modern operating systems like Windows XP or Mac OS X usually detect the hardware directly and are installing the correct USB audio drivers automatically.

You can use MAYA44 USB already now in some consumer audio applications that do not need special professional ASIO driver support. Under Windows XP this could be for example programs that don't require ASIO like more simple DJ applications. Under Mac OS X this could be applications like Garageband.

The following section describes the installation of our ASIO compatible special driver software under Windows XP. The procedure is similar with other versions of Windows.

## Installation under Windows XP

Unplug the device before you start the installer. Then launch *setup.exe* from the *ESI/MAYA44USB* folder of the included driver CD or from a download of a recent driver from our website. You can select the language used for installation, then the following dialog appears:

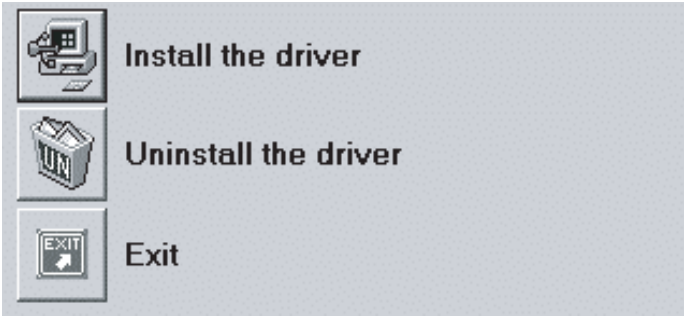


Choose *Install the driver*. The following window appears:

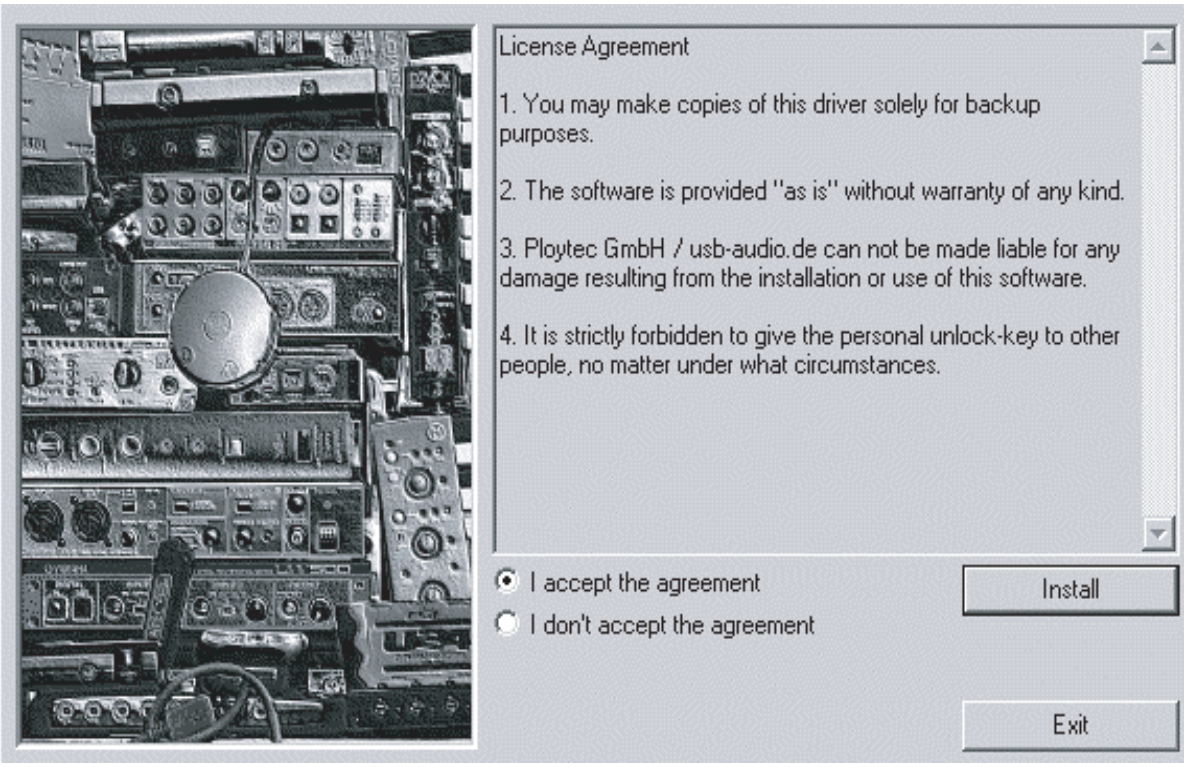


Accept the license agreement and then click on *Install*. Now 1:1 follow the instructions on screen through out the installation process.


The installer will instruct you to plug-in the USB device to the computer. The detection can always take a moment.


If you are told to do so like seen above, please unplug the device again, before you will be told to plug it in again. If that happens, please wait again until the detection (like described above) is completed.

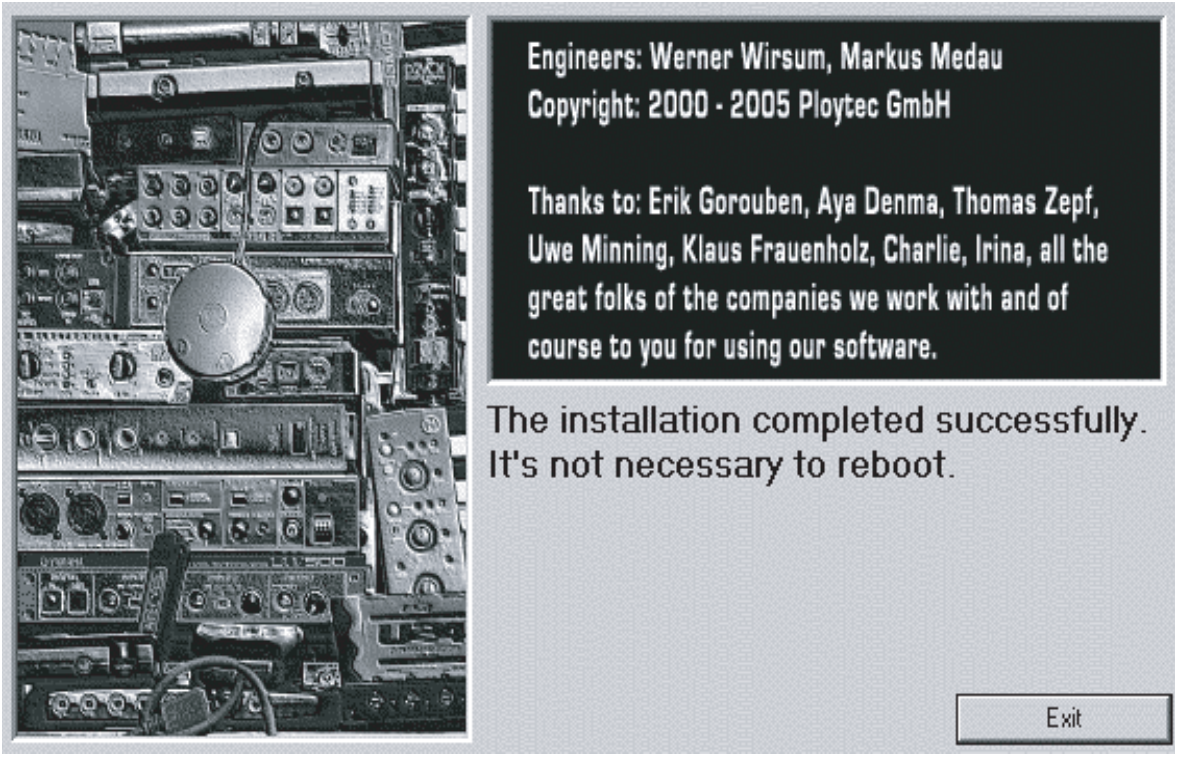


The completion of the installation can be confirmed on the screen above with *Exit*.

Congratulations! You have now completed the installation of the special ASIO driver successfully and the installation of MAYA44 USB has been completed now.

With the installer, you can also remove the driver again. If you want to do that, launch *setup.exe* again and then choose the option *Uninstall the driver*.

# 5.Setting in Applications

This chapter contains basic configuration examples for some popular software applications. Please always also refer to the manual of every audio software you use for detailed information.

## Mac OS X

After connecting your MAYA44 USB to your Macintosh, open your Audio MIDI setup panel and select your *MAYA44 USB* as default audio device for *Default Input and Default Output*.

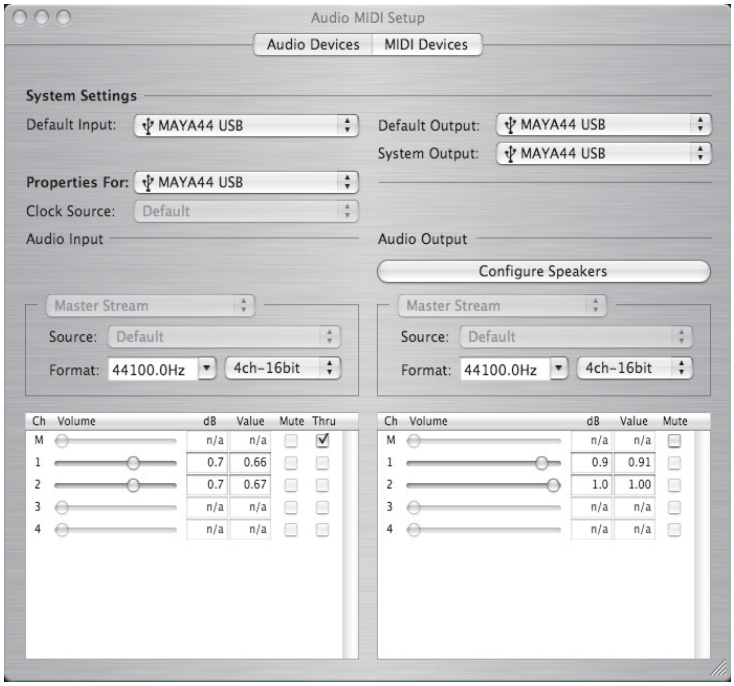


Install MAYA44 USB control panel from the driver CD.


The controls are identical to the Mixer controls (for the ASIO driver under Windows) as described on Page 36.

## ASIO Control Panel

Nearly all ASIO applications provide a button labeled *ASIO Control Panel* in the audio device settings dialog that allows you to open the control panel window of the ASIO driver. The settings done there are used for all ASIO applications, even though the dialog is only opened directly from within an application:

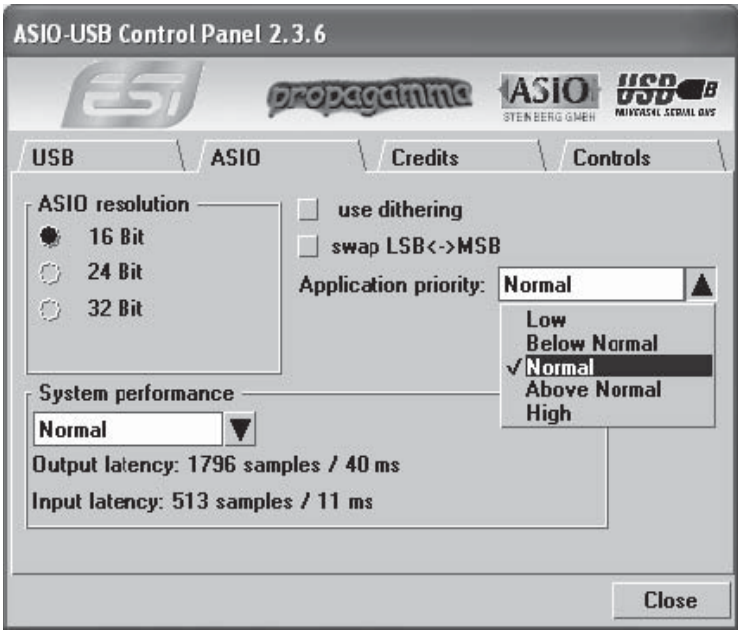


*System Performance* changes buffer sizes and latencies. Higher values allow the use of more plug ins, effects etc. at the same time but aren t fun playing virtual instruments live.

If you open the *Controls* tab within the ASIO control panel, you ll see the mixer window that is explained below:

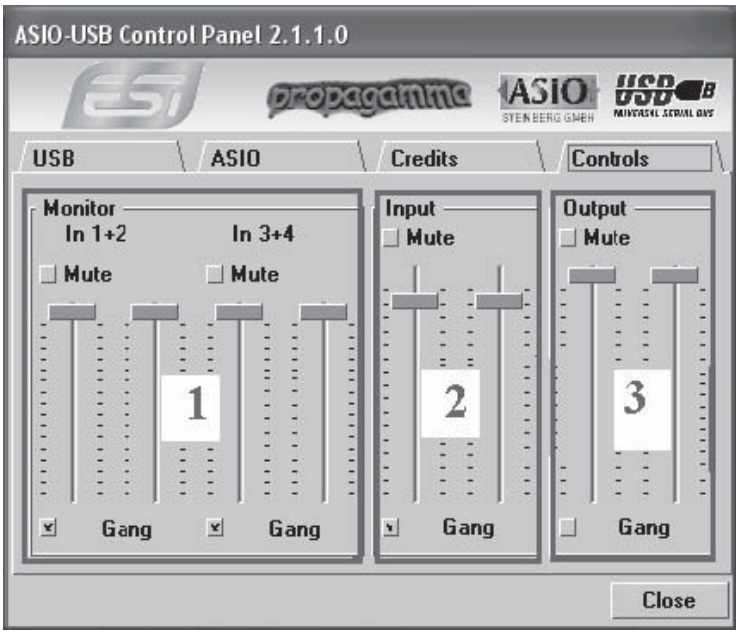


You can control the input monitor level, the input level and the output level from here. If you re not clear with this chapter, please refer to the block diagram on the following page.

1. Monitor Level Control Section

This section can be used to control the input monitor level. You can monitor the signals through the input channel 1,2 and input channel 3,4 individually and/or simultaneously. It will not affect the actual input level from the source. Even if these faders are muted, you can still record the signals from the source, but you are not able to listen to (= monitor) the input source through the analog output.

2. Input Level Control Section

This section controls the real input level through the input ports. You can control all 4 inputs using the one set of the stereo faders.

3. Output Level Control Section

These are the master output level faders. You can control all the outputs using the single set of the stereo master fader, except the digital optical output. You can control the monitoring level of the input source through the input ports and/or the playing out level of the wave file through the analog output ports.

Please note that the headphone output signal is the mixed signal from analog out 1, 2.

The *Gang* mode links the left and right faders of each channel together for easier stereo operation. Deselect *Gang* if you need to control the left and right levels independently.

**Block Diagram**

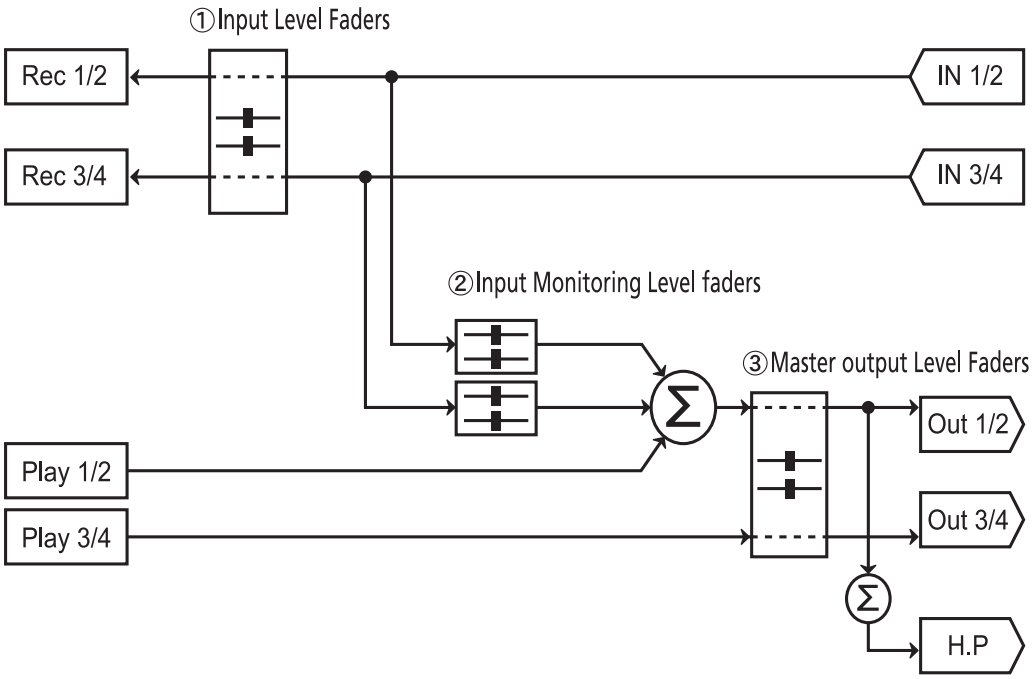

## 3. Operations

1) Check if the software is installed to the computer and OS normally, and is fully functional.

2) Check if the VCM-100 and computer is connected normally.

3) Check that the software is set to operate with the VCM-100. Open the software's control panel and check that the software is set to receive MIDI data from the VCM-100.

4) Check that the VCM-100 and computer is connected and then start up the software to perform settings with the VCM-100. The software may not recognize the VCI-100 if it is connected to the computer after the software has started.

5) Operations after the system recovering from power saving mode is not guaranteed.
Power save settings are required to be set OFF.

Many DJ software products(Native Instruments TRAKTOR, M-AUDIO torq, Abeleton Live6, MixVibes) come with a MIDI LEARN function. This function is used to assign switches, Volume of the VCM-100 as controls for parameters of the software.

The VCM-100 can control all software that has this function.

The MIDI LEARN setting for each software is different; please refer to each software's manual for further instructions.

The MIDI CC data created with the knobs, faders and switches can be manually set with the soft ware, if the software does not support the MIDI LEARN function. Please refer to the software's manual for further instructions.

Certain software does not have MIDI OUT functions. If so, functions of the software cannot be assigned to the VCM-100.

(Ex. The play KEY LED's off signal of TRAKTOR 3.0 is not sent to the VCM-100, which leaves the play key LED of the VCM-100,turned ON even if the deck on the screen has stopped. On the other hand, TRAKTOR 3.2 has MIDI out functions and the operations in the screen will match with the VCM-100's LEDs.)

# 3. Part names & Functions

Part names and functions are all set to default for easy operation and can be changed to match any style.

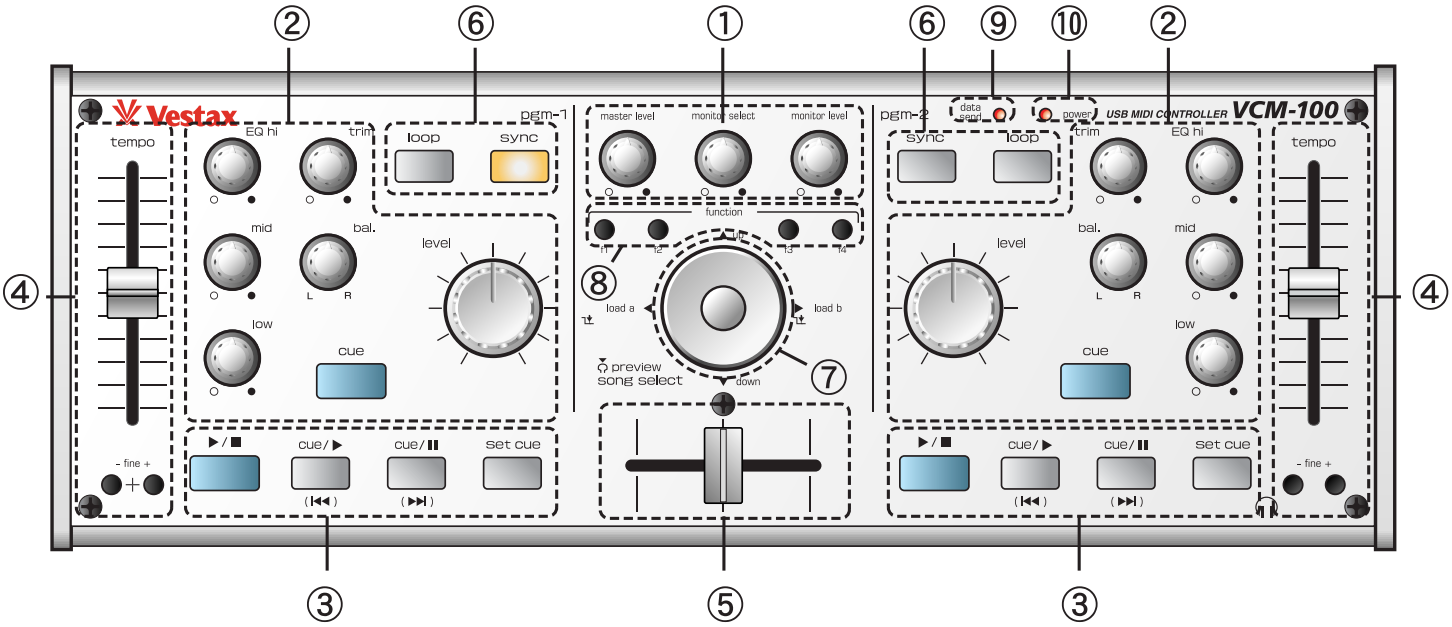


## TOP PANEL

①MASTER MONITOR SECTION
The three rotary knobs are assigned to control the software master & monitor section.
Rotary volume: 3pcs

②PGM CHANNEL SECTION
Knobs of this section are assignned to control the EQs and input volume of the software.
Rotary volume: 5pcs
Large rotary volume: 1pce
Illuminated push switch: 1pce

③DECK CONTROL SECTION
The illuminate swtiches are assigned to control PLAY/PAUSE, CUE PLAY and SET CUE of the software.
2 color illuminate push switch: 4pcs

④PITCH CONTROL SECTION
The fader and swithces are assignned to control the pitch of the software.
45mm fader volume: 1pce
Small push SW: 2pcs

⑤CROSSFADER
This fader is assigned to function as the crossfader of the software.
45mm fader volume : 1pce

⑥SOURCE CONTROL SECTION

Each switch is assigned to control loop samples and sounds with the pitch
Illuminated push switch: 1pce
2 color illuminate push switch: 1pcs

⑦CURSOR SECTION

This section is assigned to select files and confirm commands.

⑧FUNCTION ASSIGN SECTION

User selected functions can be assigned to this section.
Small rotary knob: 4pcs

Default
f1 - PGM1 Rewinding
f2 - PGM1 Fast-forwarding
f3 - PGM2 Rewinding
f4 - PGM2 Fast-forwarding

⑨DATA SEND

This LED illuminates when MIDI signals are sent to the computer, from operating a knob or switch of the VCM-100. If the LED does not illuminate, there is an error in the power or other parts of the VCM-100.

⑩POWER LED

This LED illuminates when power is provided via USB or the power adaptor. (Not include)

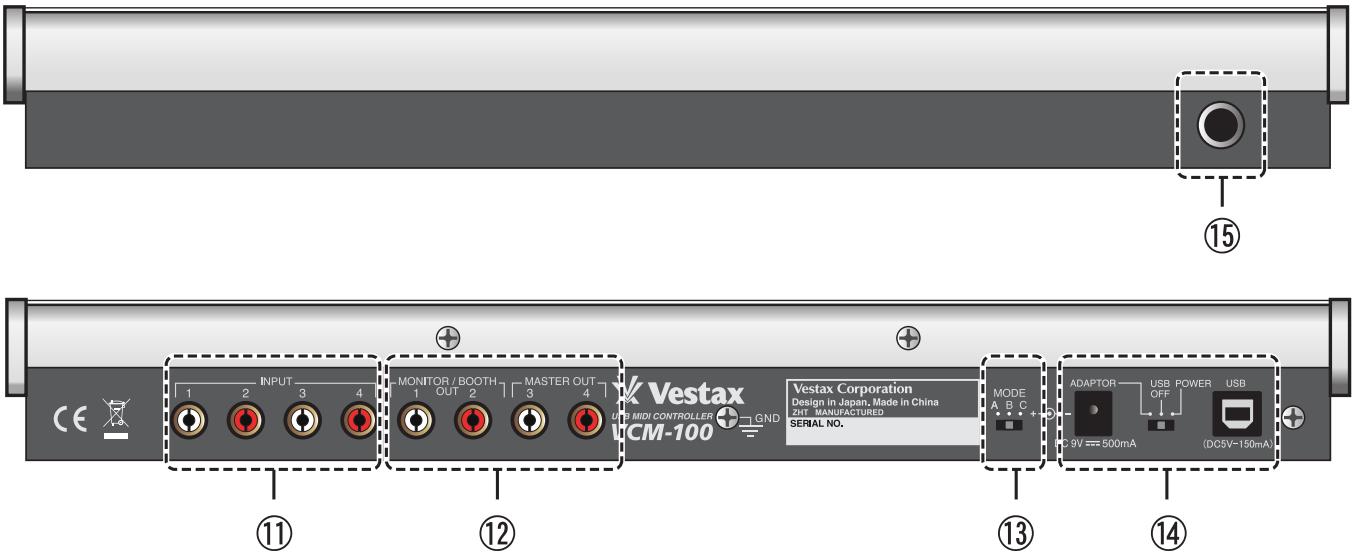


## FRONT / REAR PANEL

⑪INPUT (RCA)
4 input\ LINE channels can be assinged.

⑫OUTPUT RCA
4 output LINE channels can be assigned.
(The mopnitor of channel 3&4 will not be outputted. Use channel 1&2 for monitoring)

⑬MODE SWITCH
This switch selects the software assigned to each position of the switch.(A,B,&C)

⑭POWER SWITCH
Select "AC ADAPTOR" when supplying power from the power adaptor, select "USB BUSS POWER" when using power supplied via USB from the computer. Switch to "OFF" to turn the power off.

⑮HEADPHONE OUTPUT
Conneciton for headphones.

# 4. Trouble shooting

A) The computer doesn't recognize the VCM-100

We recommend not to connect other USB devices to the computer when mixing / editing with music / video software. USB is a reliable protocol but multimedia software is CPU-intensive to the processor and USB buss. It is possible to connect multiple USB devices to one USB outlet on the computer via hubs, but may cause complicated problems to the hardware and software.

1. Disconnect any other USB devices connected to your computer and see if the VCM-100 is recognized.
2. Open Control Panel >> System >> Select the hardware tab and then click on "Device manager". Click the "+" on the left of "Sound, Video, Game controller". Disconnect the VCM-100 if there is a "?" or "!" mark next to "USB audio device" and check that "USB audio device" disappears from the device manager list. If it disappears, reconnect the VCM-100 to a different USB port and see if the problem is solved.
3. Check if the DJ software is set to use the VCM-100 as its controller. Check the software's preference, or open the control section and check if the software is recognizing "USB audio device" and set to receive MIDI send data from the VCM-100.
4. Check if the USB cable is connected correctly.
5. If the VCM-100 is connected via USB hub, check if the problem solves by connecting directly to the computer.

B) No sound coming from the computer

Is the sound level in the control panel set to MUTE or set to the minimum level?
Are all RCA cables connected correctly?
If using a software, check the audio device settings of the software.

C) The sound doesn't output when the VCM-100 is connected.

The controls assign setting for the VCM-100 and software may be incorrect. Move all volumes, faders and switches to check if the master out, cross fader and monitor volumes level is zero. Also check, which switches the mute control is assigned to.

# 5.MIDI Map

| CONTROL | | | MIDI MODE A | | | MIDI MODE B/C | | |
|---|---|---|---|---|---|---|---|---|
| PGM-1 | SW 1 | PLAY/STOP | NOTE | 50 | 32(HEX) | NOTE | 50 | 32(HEX) |
| PGM-1 | SW 2 | CUE PLAY | NOTE | 51 | 33(HEX) | NOTE | 51 | 33(HEX) |
| PGM-1 | SW 3 | CUE PAUSE | NOTE | 52 | 34(HEX) | NOTE | 52 | 34(HEX) |
| PGM-1 | SW 4 | SET CUE | NOTE | 53 | 35(HEX) | NOTE | 53 | 35(HEX) |
| PGM-1 | SW 13 | CUE | NOTE | 72 | 48(HEX) | NOTE | 72 | 48(HEX) |
| PGM-1 | SW 15 | LOOP | NOTE | 66 | 42(HEX) | NOTE | 66 | 42(HEX) |
| PGM-1 | SW 16 | SYNC | NOTE | 70 | 46(HEX) | NOTE | 70 | 46(HEX) |
| PGM-1 | SW 10 | FINE + | NOTE | 78 | 4E(HEX) | NOTE | 78 | 4E(HEX) |
| PGM-1 | SW 9 | FINE - | NOTE | 79 | 4F(HEX) | NOTE | 79 | 4F(HEX) |
| PGM-1 | VR 4 | TEMPO | CC | 14 | 0E(HEX) | CC | 14 | 0E(HEX) |
| | | TEMPO Center | NOTE | 12 | 0C(HEX) | | | |
| PGM-1 | VR 6 | EQ HI | CC | 20 | 14(HEX) | CC | 20 | 14(HEX) |
| | | EQ HI Center | NOTE | 14 | 0E(HEX) | | | |
| PGM-1 | VR 7 | EQ MID | CC | 21 | 15(HEX) | CC | 21 | 15(HEX) |
| | | EQ MID Center | NOTE | 15 | 0F(HEX) | | | |
| PGM-1 | VR 8 | EQ LOW | CC | 23 | 17(HEX) | CC | 23 | 17(HEX) |
| | | EQ LOW Center | NOTE | 17 | 11(HEX) | | | |
| PGM-1 | VR 9 | TRIM | CC | 28 | 1C(HEX) | CC | 28 | 1C(HEX) |
| | | Center (0dB) | NOTE | 24 | 18(HEX) | | | |
| PGM-1 | VR 10 | BAL. | CC | 30 | 1E(HEX) | CC | 30 | 1E(HEX) |
| | | BAL Center | NOTE | 22 | 16(HEX) | | | |
| PGM-1 | VR 2 | LEVEL | CC | 12 | 0C(HEX) | CC | 12 | 0C(HEX) |
| PGM-2 | SW 5 | PLAY/STOP | NOTE | 54 | 36(HEX) | NOTE | 54 | 36(HEX) |
| PGM-2 | SW 6 | CUE PLAY | NOTE | 55 | 37(HEX) | NOTE | 55 | 37(HEX) |
| PGM-2 | SW 7 | CUE PAUSE | NOTE | 56 | 38(HEX) | NOTE | 56 | 38(HEX) |
| PGM-2 | SW 8 | SET CUE | NOTE | 57 | 39(HEX) | NOTE | 57 | 39(HEX) |
| PGM-2 | SW 14 | CUE | NOTE | 73 | 49(HEX) | NOTE | 73 | 49(HEX) |
| PGM-2 | SW 18 | LOOP | NOTE | 67 | 43(HEX) | NOTE | 67 | 43(HEX) |
| PGM-2 | SW 17 | SYNC | NOTE | 71 | 47(HEX) | NOTE | 71 | 47(HEX) |
| PGM-2 | SW 12 | FINE + | NOTE | 80 | 50(HEX) | NOTE | 80 | 50(HEX) |
| PGM-2 | SW 11 | FINE - | NOTE | 81 | 51(HEX) | NOTE | 81 | 51(HEX) |
| PGM-2 | VR 5 | TEMPO | CC | 15 | 0F(HEX) | CC | 15 | 0F(HEX) |
| | | TEMPO Center | NOTE | 13 | 0D(HEX) | | | |
| PGM-2 | VR 11 | EQ HI | CC | 24 | 18(HEX) | CC | 24 | 18(HEX) |
| | | EQ HI Center | NOTE | 18 | 12(HEX) | | | |
| PGM-2 | VR 12 | EQ MID | CC | 25 | 19(HEX) | CC | 25 | 19(HEX) |
| | | EQ MID Center | NOTE | 19 | 13(HEX) | | | |
| PGM-2 | VR 13 | EQ LOW | CC | 27 | 1B(HEX) | CC | 27 | 1B(HEX) |
| | | EQ LOW Center | NOTE | 21 | 15(HEX) | | | |
| PGM-2 | VR 14 | TRIM | CC | 29 | 1D(HEX) | CC | 29 | 1D(HEX) |
| | | Center (0dB) | NOTE | 26 | 19(HEX) | | | |
| PGM-2 | VR 15 | BAL. | CC | 31 | 1F(HEX) | CC | 31 | 1F(HEX) |
| | | BAL Center | NOTE | 23 | 17(HEX) | | | |
| PGM-2 | VR 3 | LEVEL | CC | 13 | 0D(HEX) | CC | 13 | 0D(HEX) |
| GLOBAL | SW 19 | F1 | NOTE | 74 | 4A(HEX) | NOTE | 74 | 4A(HEX) |
| GLOBAL | SW 20 | F2 | NOTE | 75 | 4B(HEX) | NOTE | 75 | 4B(HEX) |
| GLOBAL | SW 21 | F3 | NOTE | 76 | 4C(HEX) | NOTE | 76 | 4C(HEX) |
| GLOBAL | SW 22 | F4 | NOTE | 77 | 4D(HEX) | NOTE | 77 | 4D(HEX) |
| GLOBAL | SW 23 | UP | NOTE | 92 | 5C(HEX) | NOTE | 92 | 5C(HEX) |
| GLOBAL | SW 24 | LOAD A | NOTE | 96 | 60(HEX) | NOTE | 96 | 60(HEX) |
| GLOBAL | SW 27 | PREVIEW | NOTE | 94 | 5E(HEX) | NOTE | 94 | 5E(HEX) |
| GLOBAL | SW 26 | LOAD B | NOTE | 97 | 61(HEX) | NOTE | 97 | 61(HEX) |
| GLOBAL | SW 25 | DOWN | NOTE | 93 | 5D(HEX) | NOTE | 93 | 5D(HEX) |
| GLOBAL | VR 16 | MASTER | CC | 7 | 07(HEX) | CC | 7 | 07(HEX) |
| GLOBAL | VR 17 | MONITOR SELECT | CC | 89 | 59(HEX) | CC | 89 | 59(HEX) |
| | | Center (50%/50%) | NOTE | 26 | 1A(HEX) | | | |
| GLOBAL | VR 18 | MONITOR LEVEL | CC | 88 | 58(HEX) | CC | 88 | 58(HEX) |
| GLOBAL | VR 1 | CROSS FADER | CC | 8 | 08(HEX) | CC | 8 | 08(HEX) |

*Note1 MIDI channel : No button is pushed when Power On = MIDI ch1
Push [PGM-1 LOOP] when Power On = MIDI ch2

*Note2 NOTE : MIDI note on/off 9n(HEX) SW On : Value=127 , SW Off : Value = 0

*Note3 CC : MIDI Control Change Bn(HEX) VR min – max : Value= 0 – 127

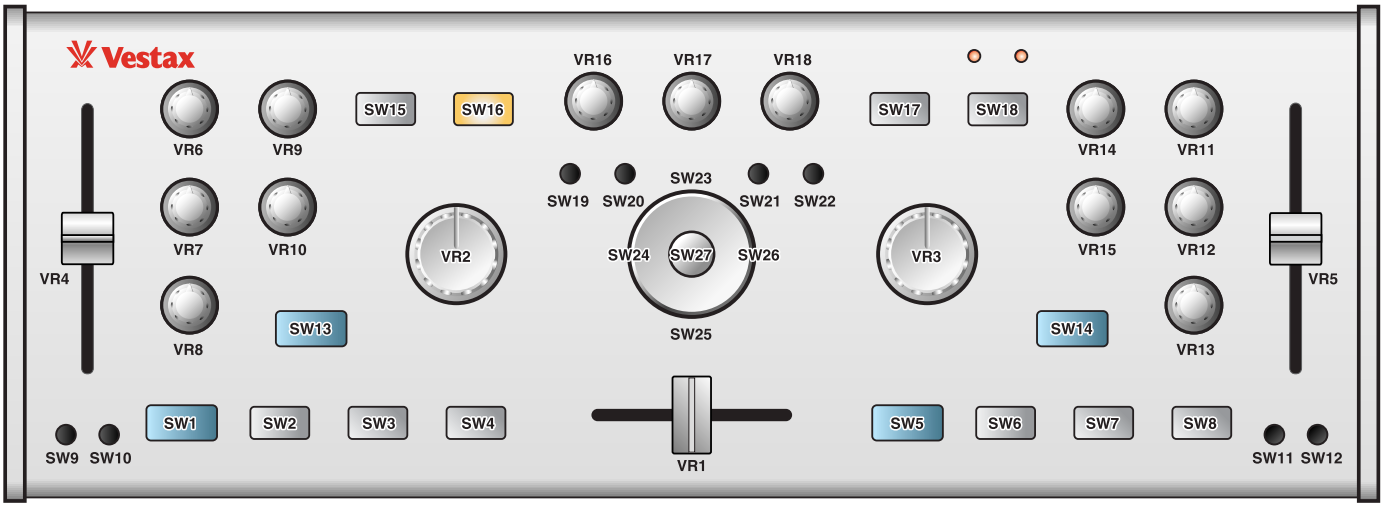


## 6.Specification

POWER SUPPLY:DC 9V 500mA (Not include)
DEMENTIONS:350(W)×134(D)×40(H)(mm)
WEIGHT: 1.8 kg

1. Functions, designs and system requirements are subject to change without notice.
2. Vestax is a copyright of Vestax corporation.
3. All logos and trademarks printed in this manual resides to the owner.

**HARDWARE**

1. Interface
   - USB spec version 1.1
   - USB audio class spec version 1.0

**ANALOG AUDIO**

1. Sample Rates
   - 44.1kHz, 48kHz

2. Analog Input
   1) connector type: 4 channel analog inputs
      * 4 RCA connectors (line in 1 and 2)
   2) -10dBV input level, unbalanced
   3) impedance: 10K Ohm

4. Analog Output
   1) connector type: 4 channel analog line outputs
      * 4 RCA connectors (line out 1 and 2)
   2) -10dBV output level, unbalanced
   3) impedance: 100 Ohm

4. Headphone Amplifier
   1) THD+N/S: -70dB, 0.03% (typical)
   2) output power: 60mW max
   3) signal to noise ratio: 110dB (typical)

**DIGITAL AUDIO**

1. Sample Rates
   - 44.1kHz, 48kHz

2. A/D Converter
   1) resolution: 18-bit
   2) dynamic range: 85dBA
   3) frequency response: 20~20KHz (@ fs=48kHz)

3. D/A Converter
   1) resolution: 20-bit
   2) dynamic range: 87dBA
   3) frequency response: 20~20KHz (@ fs=48kHz)

4. Digital Output
   1) connector type: miniplug optical connector
   2) format: IEC-958 Consumer (S/PDIF)
   3) resolution: 16-Bit
   4) sample rates: 44.1kHz, 48kHz

**DRIVER SOFTWARE**

1. ASIO 2.0 support (Windows)
   - 4 input channels / 4 output channels

2. CoreAudio support (Mac OS X)
   - 4 input channels / 4 output channels

3. MME/WDM support (Windows)
   - 2 input channels / 2 output channels

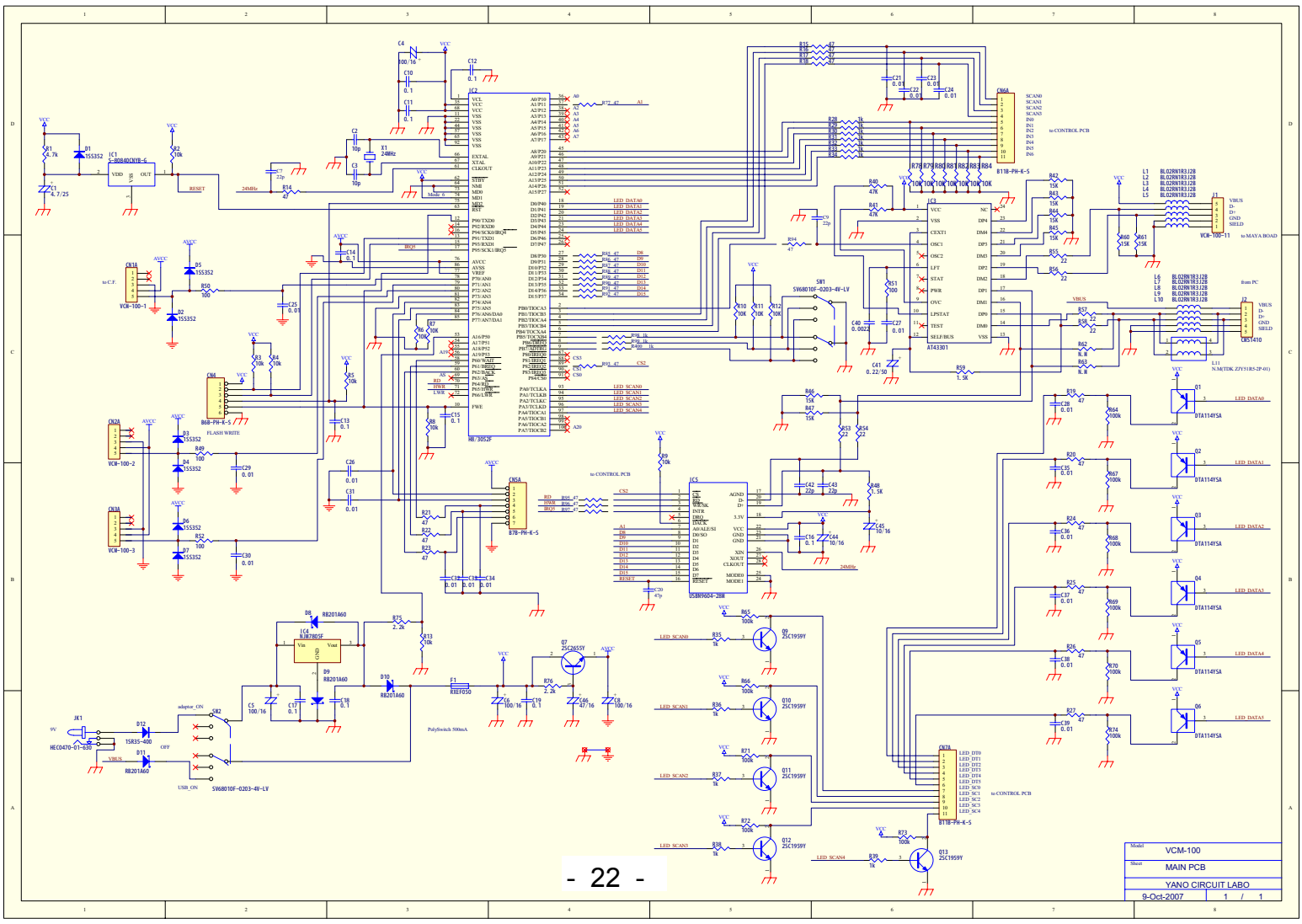
Model
VCM-100
Sheet
MAIN PCB
YANO CIRCUIT LABO
9-Oct-2007
1 / 1

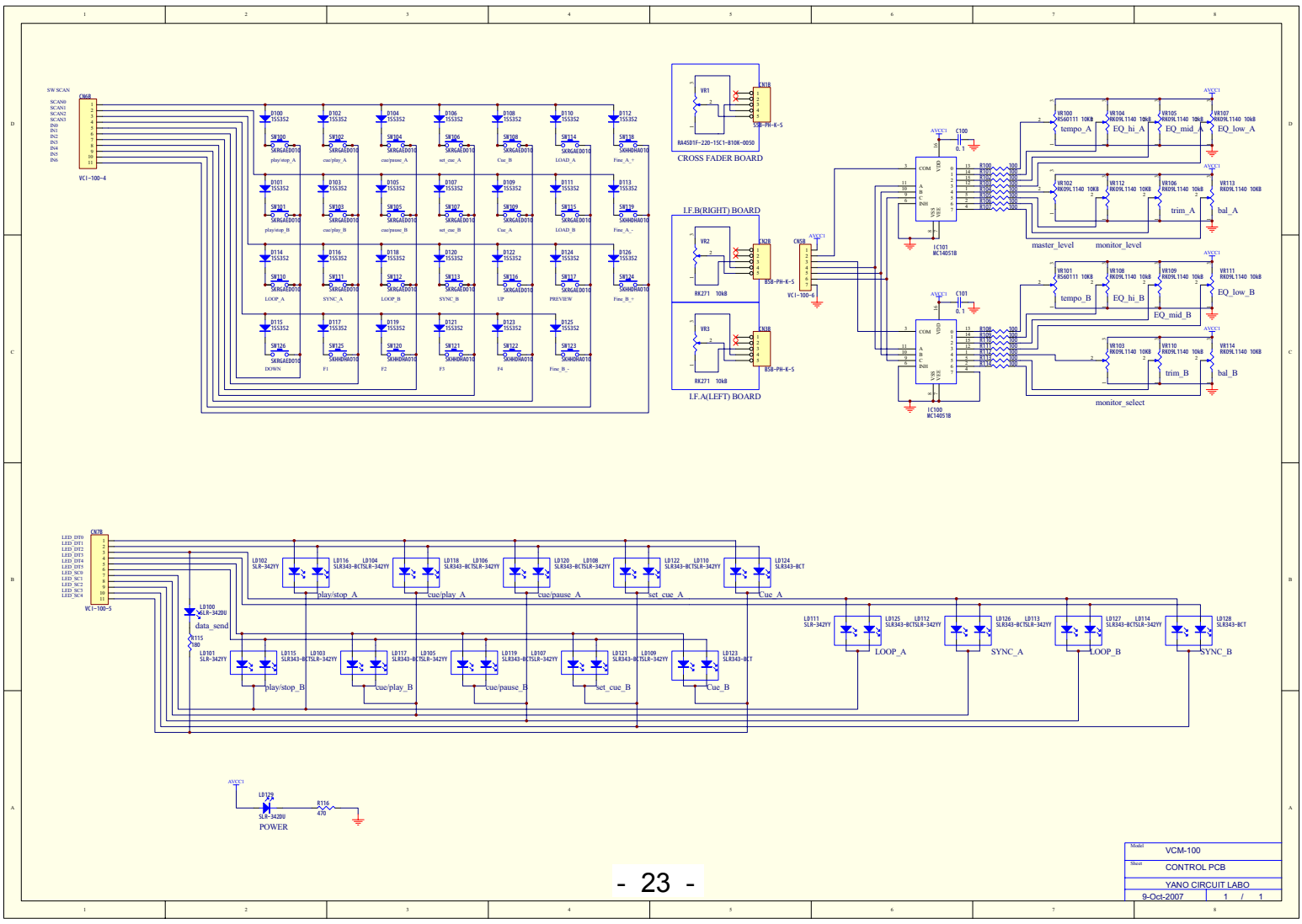


| | |
|---|---|
| Model | VCM-100 |
| Sheet | CONTROL PCB |
| | YANO CIRCUIT LABO |
| 9-Oct-2007 | 1 / 1 |

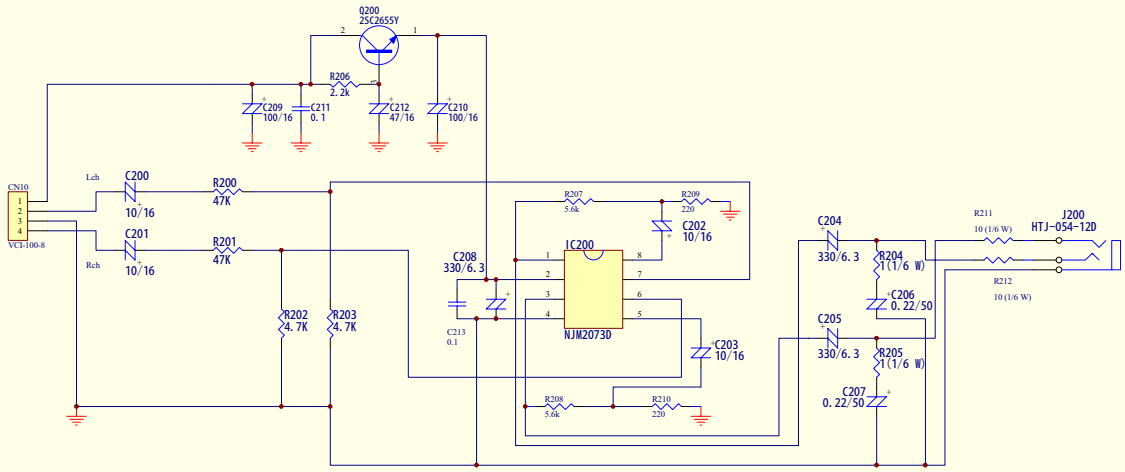


| | |
|---|---|
| Model | VCM-100 |
| Sheet | HEADPHINE PCB |
| | YANO CIRCUIT LABO |
| 9-Oct-2007 | 1 / 1 |

MAYA442C.HGL (Board layer 3) Scale=1.00  Wed Mar 12 17:54:12 2003

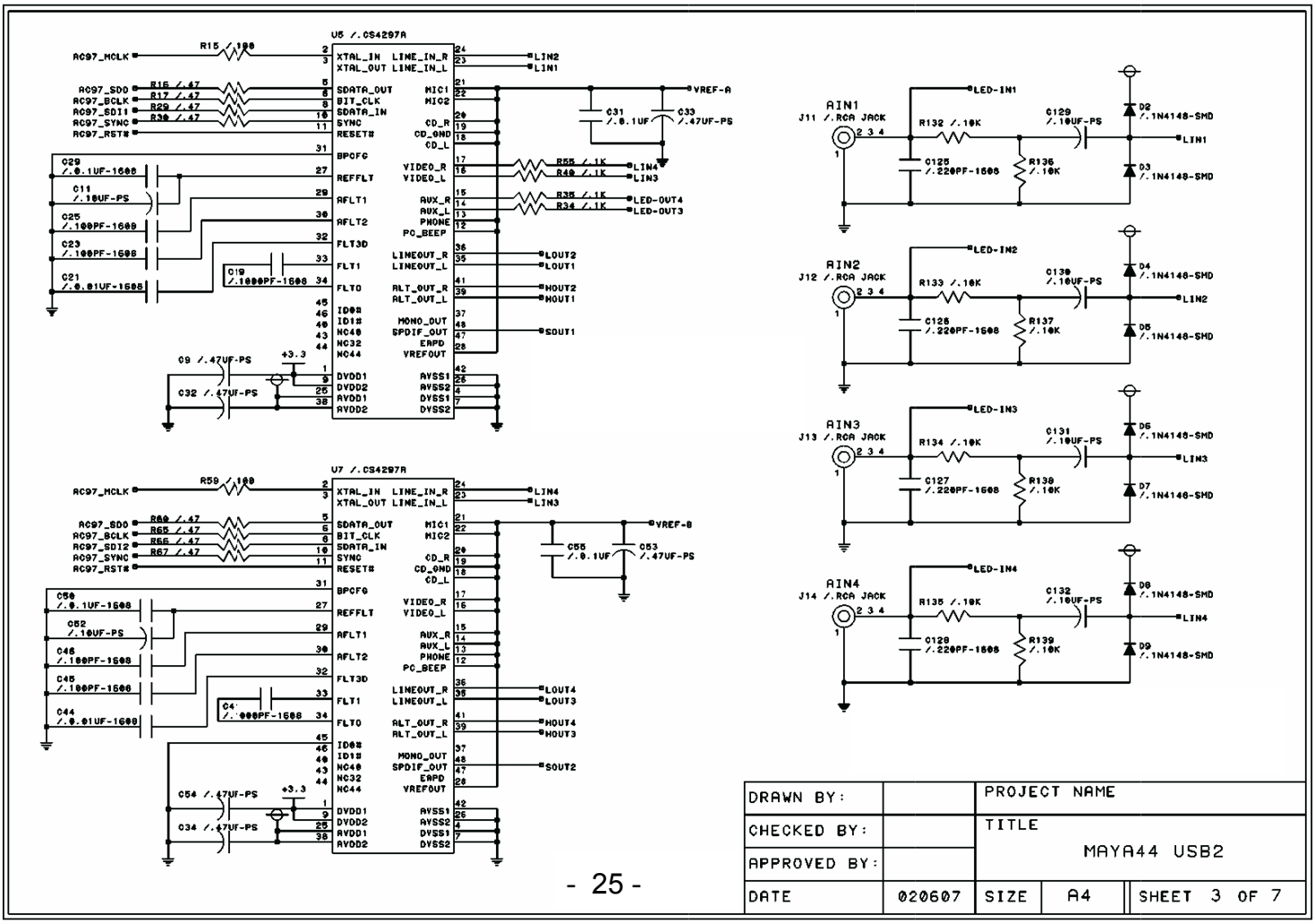


| | | | | |
|---|---|---|---|---|
| DRAWN BY: | | PROJECT NAME | | |
| CHECKED BY: | | TITLE MAYA44 USB2 | | |
| APPROVED BY: | | | | |
| DATE | 020607 | SIZE | A4 | SHEET 3 OF 7 |

MAYA442D.HGL (Board layer 4) Scale=1.00  Wed Mar 12 17:54:16 2003

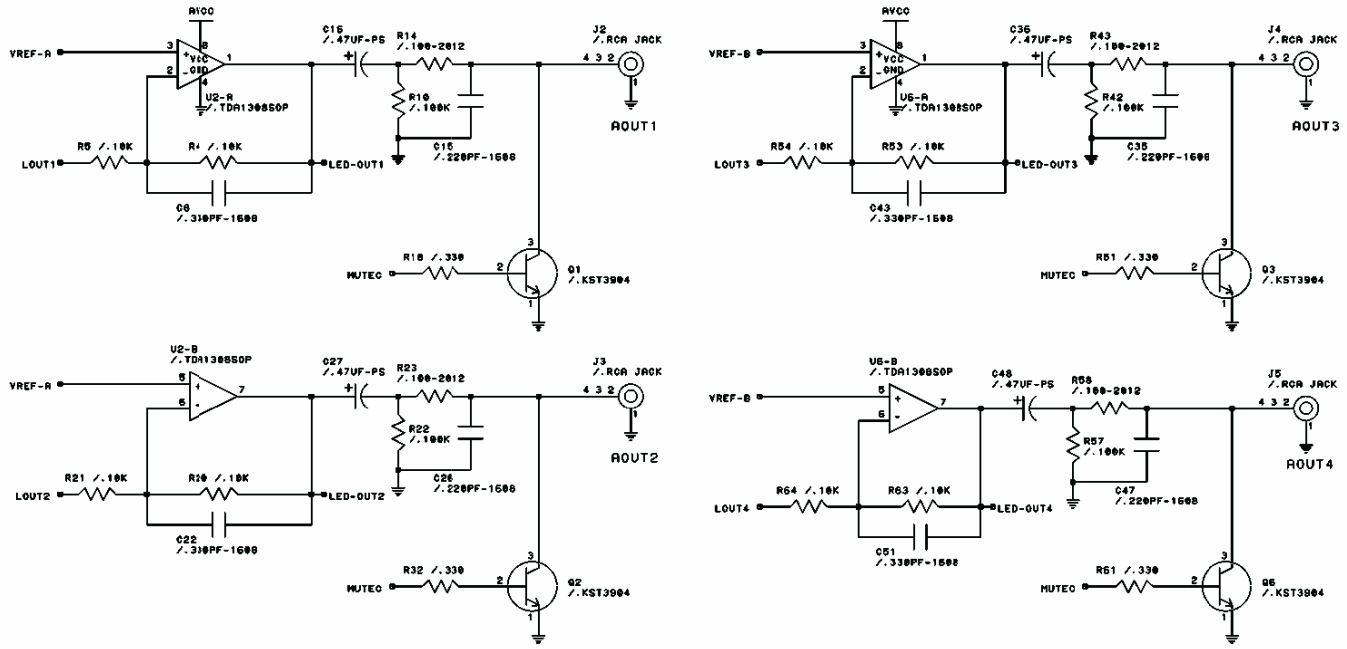


| | | | | |
|---|---|---|---|---|
| DRAWN BY: | | PROJECT NAME | | |
| CHECKED BY: | | TITLE MAYA44 USB2 | | |
| APPROVED BY: | | | | |
| DATE | 020607 | SIZE | A4 | SHEET 4 OF 6 |

MAYA442E.HGL (Board layer 5) Scale=1.00  Wed Mar 12 17:54:19 2003

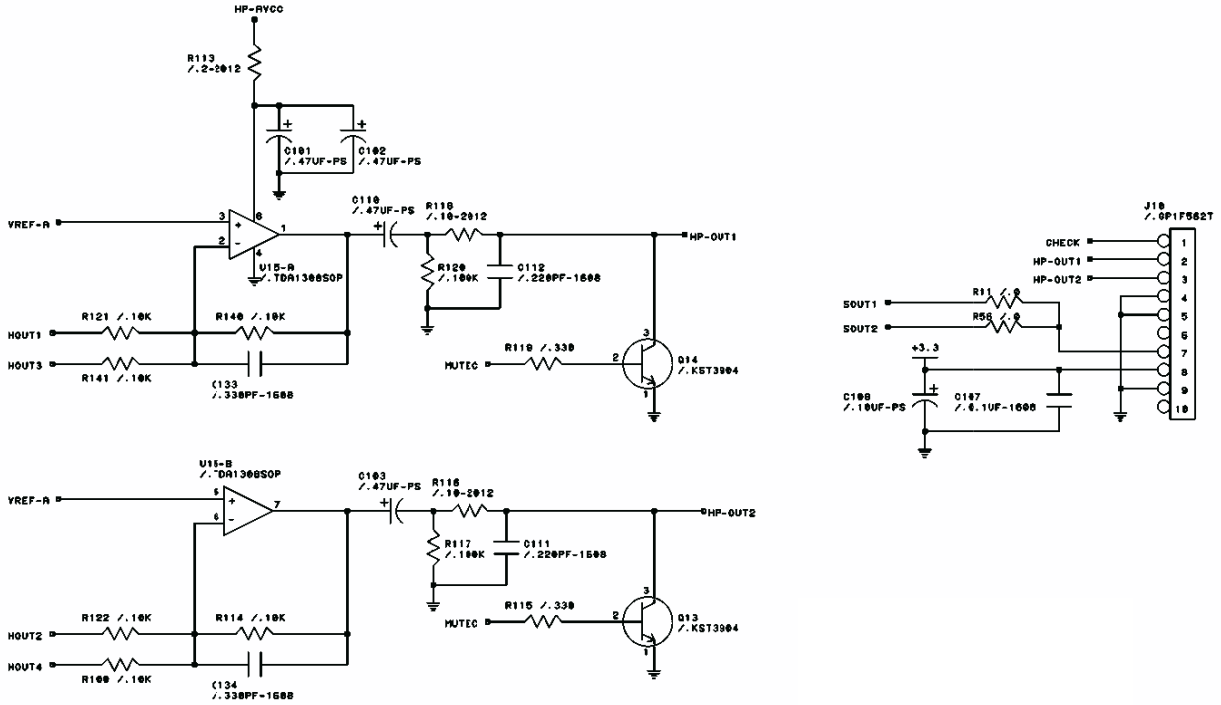


| | | | | |
|---|---|---|---|---|
| DRAWN BY: | | PROJECT NAME | | |
| CHECKED BY: | | TITLE MAYA44 USB2 | | |
| APPROVED BY: | | | | |
| DATE | 020607 | SIZE | A4 | SHEET 5 OF 6 |

MAYA442F.HGL (Board layer 6) Scale=1.00  Wed Mar 12 17:54:23 2003

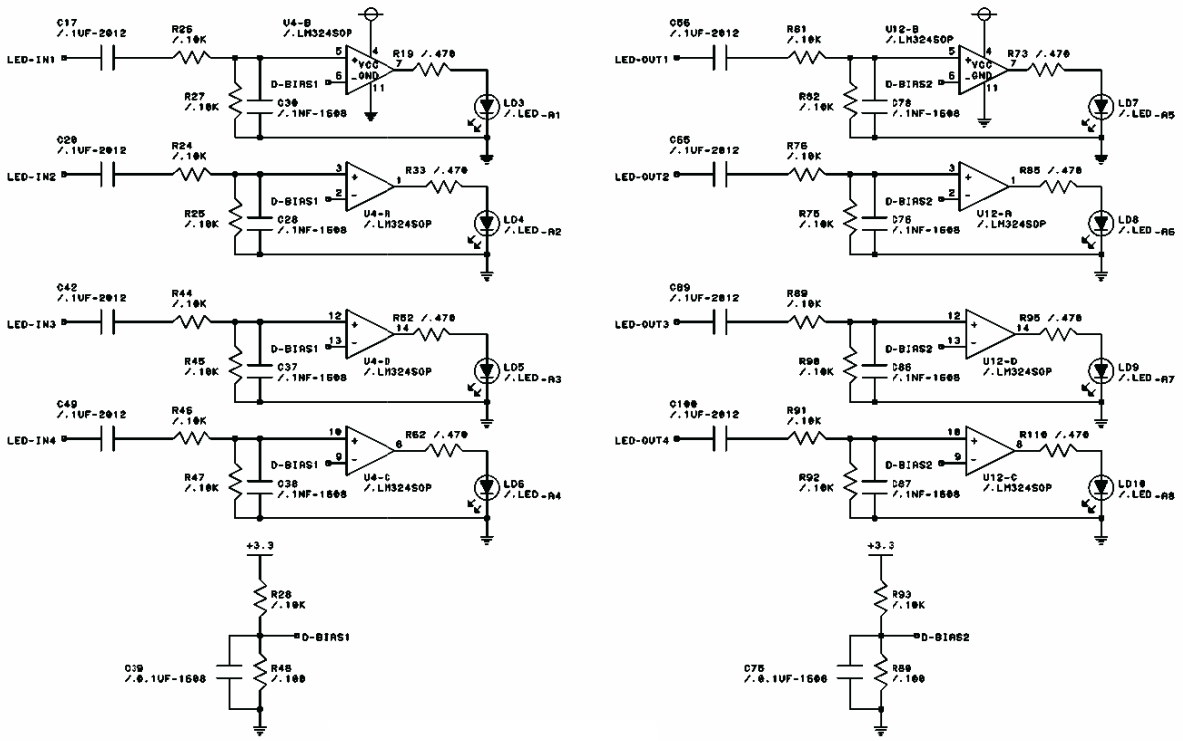


| | | | | |
|---|---|---|---|---|
| DRAWN BY: | | PROJECT NAME | | |
| CHECKED BY: | | TITLE MAYA44 USB2 | | |
| APPROVED BY: | | | | |
| DATE | 020607 | SIZE | A4 | SHEET 6 OF 6 |

| Parts Name | PCB | Part Type | Description | Bland | Designator | Footprint |
|---|---|---|---|---|---|---|
| Cap | CPU | 0,0022 | chip 1608 | (Rohm) | C40 | SM\1.6-0.8 |
| Cap | CPU | 0,01 | chip 1608 | (Rohm) | C21 | SM\1.6-0.8 |
| Cap | CPU | 0,01 | chip 1608 | (Rohm) | C22 | SM\1.6-0.8 |
| Cap | CPU | 0,01 | chip 1608 | (Rohm) | C23 | SM\1.6-0.8 |
| Cap | CPU | 0,01 | chip 1608 | (Rohm) | C24 | SM\1.6-0.8 |
| Cap | CPU | 0,01 | chip 1608 | (Rohm) | C25 | SM\1.6-0.8 |
| Cap | CPU | 0,01 | chip 1608 | (Rohm) | C26 | SM\1.6-0.8 |
| Cap | CPU | 0,01 | chip 1608 | (Rohm) | C27 | SM\1.6-0.8 |
| Cap | CPU | 0,01 | chip 1608 | (Rohm) | C28 | SM\1.6-0.8 |
| Cap | CPU | 0,01 | chip 1608 | (Rohm) | C29 | SM\1.6-0.8 |
| Cap | CPU | 0,01 | chip 1608 | (Rohm) | C30 | SM\1.6-0.8 |
| Cap | CPU | 0,01 | chip 1608 | (Rohm) | C31 | SM\1.6-0.8 |
| Cap | CPU | 0,01 | chip 1608 | (Rohm) | C32 | SM\1.6-0.8 |
| Cap | CPU | 0,01 | chip 1608 | (Rohm) | C33 | SM\1.6-0.8 |
| Cap | CPU | 0,01 | chip 1608 | (Rohm) | C34 | SM\1.6-0.8 |
| Cap | CPU | 0,01 | chip 1608 | (Rohm) | C35 | SM\1.6-0.8 |
| Cap | CPU | 0,01 | chip 1608 | (Rohm) | C36 | SM\1.6-0.8 |
| Cap | CPU | 0,01 | chip 1608 | (Rohm) | C37 | SM\1.6-0.8 |
| Cap | CPU | 0,01 | chip 1608 | (Rohm) | C38 | SM\1.6-0.8 |
| Cap | CPU | 0,01 | chip 1608 | (Rohm) | C39 | SM\1.6-0.8 |
| Cap | CPU | 0,1 | chip 1608 | (Rohm) | C10 | SM\1.6-0.8 |
| Cap | CPU | 0,1 | chip 1608 | (Rohm) | C11 | SM\1.6-0.8 |
| Cap | CPU | 0,1 | chip 1608 | (Rohm) | C12 | SM\1.6-0.8 |
| Cap | CPU | 0,1 | chip 1608 | (Rohm) | C13 | SM\1.6-0.8 |
| Cap | CPU | 0,1 | chip 1608 | (Rohm) | C14 | SM\1.6-0.8 |
| Cap | CPU | 0,1 | chip 1608 | (Rohm) | C15 | SM\1.6-0.8 |

| | | | | | | |
|---|---|---|---|---|---|---|
| Cap | CPU | 0,1 | chip 1608 | (Rohm) | C16 | SM\1.6-0.8 |
| Cap | CPU | 0,1 | chip 1608 | (Rohm) | C17 | SM\1.6-0.8 |
| Cap | CPU | 0,1 | chip 1608 | (Rohm) | C18 | SM\1.6-0.8 |
| Cap | CPU | 0,1 | chip 1608 | (Rohm) | C19 | SM\1.6-0.8 |
| Cap | Control | 0,1 | chip 1608 | (Rohm) | C100 | SM\1.6-0.8 |
| Cap | Control | 0,1 | chip 1608 | (Rohm) | C101 | SM\1.6-0.8 |
| Cap | HeadPhone | **0,1** | chip 1608 | (Rohm) | **C211** | SM\1.6-0.8 |
| Cap | HeadPhone | **0,1** | chip 1608 | (Rohm) | **C213** | SM\1.6-0.8 |
| Cap | CPU | 10p | chip 1608 | (Rohm) | C3 | SM\1.6-0.8 |
| Cap | CPU | 10p | chip 1608 | (Rohm) | C2 | SM\1.6-0.8 |
| Cap | CPU | 22p | chip 1608 | (Rohm) | **C7** | SM\1.6-0.8 |
| Cap | CPU | 22p | chip 1608 | (Rohm) | **C9** | SM\1.6-0.8 |
| Cap | CPU | 22p | chip 1608 | (Rohm) | C42 | SM\1.6-0.8 |
| Cap | CPU | 22p | chip 1608 | (Rohm) | C43 | SM\1.6-0.8 |
| Cap | CPU | 47p | chip 1608 | (Rohm) | **C20** | SM\1.6-0.8 |
| Cap | HeadPhone | 0.22/50 | フォーミングP=5.0 | ELNA | C206 | E\M5\5AX |
| Cap | HeadPhone | 0.22/50 | フォーミングP=5.0 | ELNA | C207 | E\M5\5AX |
| Cap | CPU | 0.22/50 | フォーミングP=5.0 | ELNA | C41 | E\M5\5AX |
| Cap | HeadPhone | 10/16 | フォーミングP=5.0 | ELNA | C200 | E\M5\5AX |
| Cap | HeadPhone | 10/16 | フォーミングP=5.0 | ELNA | C201 | E\M5\5AX |
| Cap | HeadPhone | 10/16 | フォーミングP=5.0 | ELNA | **C202** | E\M5\5AX |
| Cap | HeadPhone | 10/16 | フォーミングP=5.0 | ELNA | **C203** | E\M5\5AX |
| Cap | CPU | 10/16 | フォーミングP=5.0 | ELNA | C44 | E\M5\5AX |
| Cap | CPU | 10/16 | フォーミングP=5.0 | ELNA | C45 | E\M5\5AX |
| Cap | HeadPhone | 100/16 | フォーミングP=5.0 | ELNA | **C210** | E\M5\5AX |
| Cap | HeadPhone | 100/16 | フォーミングP=5.0 | ELNA | **C209** | E\M5\5AX |
| Cap | CPU | 100/16 | フォーミングP=5.0 | ELNA | C4 | E\M5\5AX |

| | | | | | | |
|---|---|---|---|---|---|---|
| Cap | CPU | 100/16 | フォーミングP=5.0 | ELNA | C5 | E\M5\5AX |
| Cap | CPU | 100/16 | フォーミングP=5.0 | ELNA | C6 | E\M5\5AX |
| Cap | CPU | 100/16 | フォーミングP=5.0 | ELNA | C8 | E\M5\5AX |
| Cap | HeadPhone | 330/6.3 | フォーミングP=5.0 | ELNA | C204 | E\M5\5AX |
| Cap | HeadPhone | 330/6.3 | フォーミングP=5.0 | ELNA | C205 | E\M5\5AX |
| Cap | HeadPhone | 330/6.3 | フォーミングP=5.0 | ELNA | C208 | E\M5\5AX |
| Cap | CPU | 4.7/25 | フォーミングP=5.0 | ELNA | C1 | E\M5\5AX |
| Cap | HeadPhone | 47/16 | フォーミングP=5.0 | ELNA | C212 | E\M5\5AX |
| Cap | CPU | 47/16 | フォーミングP=5.0 | ELNA | C46 | E\M5\5AX |
| Connector | CPU | B11B-PH-K-S | 11pin Pitch=2.0 | JST | CN6A | HEAD11 2.0 |
| Connector | CPU | B11B-PH-K-S | 11pin Pitch=2.0 | JST | CN7A | HEAD11 2.0 |
| Connector | Control | B5B-PH-K-S | 5pin Pitch=2.0 | JST | CN3B | HEAD5 2.0 |
| Connector | Control | B5B-PH-K-S | 5pin Pitch=2.0 | JST | CN2B | HEAD5 2.0 |
| Connector | CPU | B6B-PH-K-S | 6pin Pitch=2.0 | JST | CN4 | HEAD6 2.0 |
| Connector | CPU | B7B-PH-K-S | 7pin Pitch=2.0 | JST | CN5A | HEAD7 2.0 |
| Connector | Control | S5B-PH-K-S | 5pin Pitch=2.0 横型 | JST | CN1B | S5B-PH-K-S |
| Diode | CPU | 1SR35-400 | DO-41 | rohm | D12 | D\M5 |
| Diode | Control | 1SS352 | chip 1-1E1A | Toshiba | D100 | 1SS352 |
| Diode | Control | 1SS352 | chip 1-1E1A | Toshiba | D101 | 1SS352 |
| Diode | Control | 1SS352 | chip 1-1E1A | Toshiba | D102 | 1SS352 |
| Diode | Control | 1SS352 | chip 1-1E1A | Toshiba | D103 | 1SS352 |
| Diode | Control | 1SS352 | chip 1-1E1A | Toshiba | D104 | 1SS352 |
| Diode | Control | 1SS352 | chip 1-1E1A | Toshiba | D105 | 1SS352 |
| Diode | Control | 1SS352 | chip 1-1E1A | Toshiba | D106 | 1SS352 |
| Diode | Control | 1SS352 | chip 1-1E1A | Toshiba | D107 | 1SS352 |
| Diode | Control | 1SS352 | chip 1-1E1A | Toshiba | D108 | 1SS352 |
| Diode | Control | 1SS352 | chip 1-1E1A | Toshiba | D109 | 1SS352 |

| | | | | | | |
|---|---|---|---|---|---|---|
| Diode | Control | 1SS352 | chip 1-1E1A | Toshiba | D110 | 1SS352 |
| Diode | Control | 1SS352 | chip 1-1E1A | Toshiba | D111 | 1SS352 |
| Diode | Control | 1SS352 | chip 1-1E1A | Toshiba | D112 | 1SS352 |
| Diode | Control | 1SS352 | chip 1-1E1A | Toshiba | D113 | 1SS352 |
| Diode | Control | 1SS352 | chip 1-1E1A | Toshiba | D114 | 1SS352 |
| Diode | Control | 1SS352 | chip 1-1E1A | Toshiba | D115 | 1SS352 |
| Diode | Control | 1SS352 | chip 1-1E1A | Toshiba | D116 | 1SS352 |
| Diode | Control | 1SS352 | chip 1-1E1A | Toshiba | D117 | 1SS352 |
| Diode | Control | 1SS352 | chip 1-1E1A | Toshiba | D118 | 1SS352 |
| Diode | Control | 1SS352 | chip 1-1E1A | Toshiba | D119 | 1SS352 |
| Diode | Control | 1SS352 | chip 1-1E1A | Toshiba | D120 | 1SS352 |
| Diode | Control | 1SS352 | chip 1-1E1A | Toshiba | D121 | 1SS352 |
| Diode | Control | 1SS352 | chip 1-1E1A | Toshiba | D122 | 1SS352 |
| Diode | Control | 1SS352 | chip 1-1E1A | Toshiba | D123 | 1SS352 |
| Diode | Control | 1SS352 | chip 1-1E1A | Toshiba | D124 | 1SS352 |
| Diode | Control | 1SS352 | chip 1-1E1A | Toshiba | D125 | 1SS352 |
| Diode | Control | 1SS352 | chip 1-1E1A | Toshiba | D126 | 1SS352 |
| Diode | CPU | 1SS352 | chip 1-1E1A | Toshiba | D1 | 1SS352 |
| Diode | CPU | 1SS352 | chip 1-1E1A | Toshiba | D2 | 1SS352 |
| Diode | CPU | 1SS352 | chip 1-1E1A | Toshiba | D3 | 1SS352 |
| Diode | CPU | 1SS352 | chip 1-1E1A | Toshiba | D4 | 1SS352 |
| Diode | CPU | 1SS352 | chip 1-1E1A | Toshiba | D5 | 1SS352 |
| Diode | CPU | 1SS352 | chip 1-1E1A | Toshiba | D6 | 1SS352 |
| Diode | CPU | 1SS352 | chip 1-1E1A | Toshiba | D7 | 1SS352 |
| Diode | CPU | RB201A60 | Schottky Diode | Rohm | D10 | DZ\M5\SS |
| Diode | CPU | RB201A60 | Schottky Diode | Rohm | D11 | DZ\M5\SS |
| Diode | CPU | RB201A60 | Schottky Diode | Rohm | D8 | DZ\M5\SS |

| | | | | | | |
|---|---|---|---|---|---|---|
| Diode | CPU | RB201A60 | Schottky Diode | Rohm | D9 | DZ\M5\SS |
| Harness | Control | VCI-100-4 | P=2.0mm 11P-SAN | JST | CN6B | CN11-2.0 |
| Harness | Control | VCI-100-5 | P=2.0mm 11P-SAN | JST | CN7B | CN11-2.0 |
| Harness | Control | VCI-100-6 | P=2.0mm 7P-SAN | JST | CN5B | CN7-2.0 |
| Harness | HeadPhone | VCI-100-8 | Connector | | CN10 | CN3-2.0 |
| Harness | CPU | VCM-100-1 | P= 2.0mm 5P-SAN | JST | CN1A | CN5-2.0 |
| Harness | CPU | VCM-100-11 | **P=2.5mm 5P-SBN** | JST | **J1** | CN5-2.5 |
| Harness | CPU | VCM-100-2 | P=2.0mm 5P-SAN | JST | CN2A | CN5-2.0 |
| Harness | CPU | VCM-100-3 | P=2.0mm 5P-SAN | JST | CN3A | CN5-2.0 |
| IC | CPU | AT43301 | | ATMEL | IC3 | SOP24L |
| IC | CPU | H8/3052F | | Renesas | IC2 | H8/3052F |
| IC | Control | MC14051B | DIP16 | | IC101 | DIP16 |
| IC | Control | MC14051B | DIP16 | | IC100 | DIP16 |
| IC | HeadPhone | NJM2073D | DIP8 | JRC | IC200 | DIP8A |
| IC | CPU | NJM7805F | TO-220 | JRC | IC4 | TO-220 |
| IC | CPU | S-80840CNYB-G | TO-92 | seiko inst | IC1 | TO-92 |
| IC | CPU | USBN9604-28M | | National semi | IC5 | USBN9604 |
| Inductor | CPU | BL02RN1R3J2B | | Murata | L1 | L\M5\SS |
| Inductor | CPU | BL02RN1R3J2B | | Murata | L2 | L\M5\SS |
| Inductor | CPU | BL02RN1R3J2B | | Murata | L3 | L\M5\SS |
| Inductor | CPU | BL02RN1R3J2B | | Murata | L4 | L\M5\SS |
| Inductor | CPU | BL02RN1R3J2B | | Murata | L5 | L\M5\SS |
| Inductor | CPU | BL02RN1R3J2B | | Murata | L6 | L\M5\SS |
| Inductor | CPU | BL02RN1R3J2B | | Murata | L7 | L\M5\SS |
| Inductor | CPU | BL02RN1R3J2B | | Murata | L8 | L\M5\SS |
| Inductor | CPU | BL02RN1R3J2B | | Murata | L9 | L\M5\SS |
| Inductor | CPU | BL02RN1R3J2B | | Murata | **L10** | L\M5\SS |

| | | | | | | |
|---|---|---|---|---|---|---|
| Jack DC | CPU | HEC0470-01-630 | | Hosiden | JK1 | DCJACK |
| Jack Phone | HeadPhone | HTJ-054-12D | | Kumming | J200 | HTJ-054-12D |
| Jack USB | CPU | CMS1410 | | Hosiden | J2 | CMS1410 |
| LED | Control | SLR-342DU | | (Rohm) | LD100 | LED1 |
| LED | Control | SLR-342DU | | (Rohm) | LD129 | LED1 |
| SPACER LED | LM-10 | LEDスペーサー | | MAC8 | LD100用 | LEDスペーサー |
| SPACER LED | LM-10 | LEDスペーサー | | MAC8 | LD129用 | LEDスペーサー |
| LED | Control | SLR-342YY | | (Rohm) | LD101 | LED1 |
| LED | Control | SLR-342YY | | (Rohm) | LD102 | LED1 |
| LED | Control | SLR-342YY | | (Rohm) | LD103 | LED1 |
| LED | Control | SLR-342YY | | (Rohm) | LD104 | LED1 |
| LED | Control | SLR-342YY | | (Rohm) | LD105 | LED1 |
| LED | Control | SLR-342YY | | (Rohm) | LD106 | LED1 |
| LED | Control | SLR-342YY | | (Rohm) | LD107 | LED1 |
| LED | Control | SLR-342YY | | (Rohm) | LD108 | LED1 |
| LED | Control | SLR-342YY | | (Rohm) | LD109 | LED1 |
| LED | Control | SLR-342YY | | (Rohm) | LD110 | LED1 |
| LED | Control | SLR-342YY | | (Rohm) | LD111 | LED1 |
| LED | Control | SLR-342YY | | (Rohm) | LD112 | LED1 |
| LED | Control | SLR-342YY | | (Rohm) | LD113 | LED1 |
| LED | Control | SLR-342YY | | (Rohm) | LD114 | LED1 |
| LED | Control | SLR343-BCT | | (Rohm) | LD115 | LED1 |
| LED | Control | SLR343-BCT | | (Rohm) | LD116 | LED1 |
| LED | Control | SLR343-BCT | | (Rohm) | LD117 | LED1 |
| LED | Control | SLR343-BCT | | (Rohm) | LD118 | LED1 |
| LED | Control | SLR343-BCT | | (Rohm) | LD119 | LED1 |
| LED | Control | SLR343-BCT | | (Rohm) | LD120 | LED1 |

| | | | | | | |
|---|---|---|---|---|---|---|
| LED | Control | SLR343-BCT | | (Rohm) | LD121 | LED1 |
| LED | Control | SLR343-BCT | | (Rohm) | LD122 | LED1 |
| LED | Control | SLR343-BCT | | (Rohm) | LD123 | LED1 |
| LED | Control | SLR343-BCT | | (Rohm) | LD124 | LED1 |
| LED | Control | SLR343-BCT | | (Rohm) | LD125 | LED1 |
| LED | Control | SLR343-BCT | | (Rohm) | LD126 | LED1 |
| LED | Control | SLR343-BCT | | (Rohm) | LD127 | LED1 |
| LED | Control | SLR343-BCT | | (Rohm) | LD128 | LED1 |
| CRISTAL | CPU | 24MHz/HC49SFWB24000 | 24MHz | KYOSERA | X1 | XTAL18US |
| Pori fuse | CPU | RXEF050 | | TAIKO ERC | F1 | RXEF050 |
| Resistor | CPU | 22 | chip 1608 | (Rohm) | R53 | SM\1.6-0.8 |
| Resistor | CPU | 22 | chip 1608 | (Rohm) | R54 | SM\1.6-0.8 |
| Resistor | CPU | 22 | chip 1608 | (Rohm) | R55 | SM\1.6-0.8 |
| Resistor | CPU | 22 | chip 1608 | (Rohm) | R56 | SM\1.6-0.8 |
| Resistor | CPU | 22 | chip 1608 | (Rohm) | R57 | SM\1.6-0.8 |
| Resistor | CPU | 22 | chip 1608 | (Rohm) | R58 | SM\1.6-0.8 |
| Resistor | CPU | 47 | chip 1608 | (Rohm) | R14 | SM\1.6-0.8 |
| Resistor | CPU | 47 | chip 1608 | (Rohm) | R15 | SM\1.6-0.8 |
| Resistor | CPU | 47 | chip 1608 | (Rohm) | R16 | SM\1.6-0.8 |
| Resistor | CPU | 47 | chip 1608 | (Rohm) | R17 | SM\1.6-0.8 |
| Resistor | CPU | 47 | chip 1608 | (Rohm) | R18 | SM\1.6-0.8 |
| Resistor | CPU | 47 | chip 1608 | (Rohm) | R19 | SM\1.6-0.8 |
| Resistor | CPU | 47 | chip 1608 | (Rohm) | R20 | SM\1.6-0.8 |
| Resistor | CPU | 47 | chip 1608 | (Rohm) | R21 | SM\1.6-0.8 |
| Resistor | CPU | 47 | chip 1608 | (Rohm) | R22 | SM\1.6-0.8 |
| Resistor | CPU | 47 | chip 1608 | (Rohm) | R23 | SM\1.6-0.8 |
| Resistor | CPU | 47 | chip 1608 | (Rohm) | R24 | SM\1.6-0.8 |

| | | | | | | |
|---|---|---|---|---|---|---|
| Resistor | CPU | 47 | chip 1608 | (Rohm) | R25 | SM\1.6-0.8 |
| Resistor | CPU | 47 | chip 1608 | (Rohm) | R26 | SM\1.6-0.8 |
| Resistor | CPU | 47 | chip 1608 | (Rohm) | R27 | SM\1.6-0.8 |
| Resistor | CPU | 47 | chip 1608 | (Rohm) | R77 | SM\1.6-0.8 |
| Resistor | CPU | 47 | chip 1608 | (Rohm) | R85 | SM\1.6-0.8 |
| Resistor | CPU | 47 | chip 1608 | (Rohm) | R86 | SM\1.6-0.8 |
| Resistor | CPU | 47 | chip 1608 | (Rohm) | R87 | SM\1.6-0.8 |
| Resistor | CPU | 47 | chip 1608 | (Rohm) | R88 | SM\1.6-0.8 |
| Resistor | CPU | 47 | chip 1608 | (Rohm) | R89 | SM\1.6-0.8 |
| Resistor | CPU | 47 | chip 1608 | (Rohm) | R90 | SM\1.6-0.8 |
| Resistor | CPU | 47 | chip 1608 | (Rohm) | R91 | SM\1.6-0.8 |
| Resistor | CPU | 47 | chip 1608 | (Rohm) | R92 | SM\1.6-0.8 |
| Resistor | CPU | 47 | chip 1608 | (Rohm) | R93 | SM\1.6-0.8 |
| Resistor | CPU | 47 | chip 1608 | (Rohm) | R94 | SM\1.6-0.8 |
| Resistor | CPU | 47 | chip 1608 | (Rohm) | R95 | SM\1.6-0.8 |
| Resistor | CPU | 47 | chip 1608 | (Rohm) | R96 | SM\1.6-0.8 |
| Resistor | CPU | 47 | chip 1608 | (Rohm) | R97 | SM\1.6-0.8 |
| Resistor | Control | 100 | chip 1608 | (Rohm) | R100 | SM\1.6-0.8 |
| Resistor | Control | 100 | chip 1608 | (Rohm) | R101 | SM\1.6-0.8 |
| Resistor | Control | 100 | chip 1608 | (Rohm) | R102 | SM\1.6-0.8 |
| Resistor | Control | 100 | chip 1608 | (Rohm) | R103 | SM\1.6-0.8 |
| Resistor | Control | 100 | chip 1608 | (Rohm) | R104 | SM\1.6-0.8 |
| Resistor | Control | 100 | chip 1608 | (Rohm) | R105 | SM\1.6-0.8 |
| Resistor | Control | 100 | chip 1608 | (Rohm) | R106 | SM\1.6-0.8 |
| Resistor | Control | 100 | chip 1608 | (Rohm) | R107 | SM\1.6-0.8 |
| Resistor | Control | 100 | chip 1608 | (Rohm) | R108 | SM\1.6-0.8 |
| Resistor | Control | 100 | chip 1608 | (Rohm) | R109 | SM\1.6-0.8 |

| | | | | | | |
|---|---|---|---|---|---|---|
| Resistor | Control | 100 | chip 1608 | (Rohm) | R110 | SM\1.6-0.8 |
| Resistor | Control | 100 | chip 1608 | (Rohm) | R111 | SM\1.6-0.8 |
| Resistor | Control | 100 | chip 1608 | (Rohm) | R112 | SM\1.6-0.8 |
| Resistor | Control | 100 | chip 1608 | (Rohm) | R113 | SM\1.6-0.8 |
| Resistor | Control | 100 | chip 1608 | (Rohm) | R114 | SM\1.6-0.8 |
| Resistor | CPU | 100 | chip 1608 | (Rohm) | R49 | SM\1.6-0.8 |
| Resistor | CPU | 100 | chip 1608 | (Rohm) | R50 | SM\1.6-0.8 |
| Resistor | CPU | 100 | chip 1608 | (Rohm) | R51 | SM\1.6-0.8 |
| Resistor | CPU | 100 | chip 1608 | (Rohm) | R52 | SM\1.6-0.8 |
| Resistor | Control | 180 | chip 1608 | (Rohm) | R115 | SM\1.6-0.8 |
| Resistor | HeadPhone | 220 | chip 1608 | (Rohm) | R209 | SM\1.6-0.8 |
| Resistor | HeadPhone | 220 | chip 1608 | (Rohm) | R210 | SM\1.6-0.8 |
| Resistor | Control | 470 | chip 1608 | (Rohm) | R116 | SM\1.6-0.8 |
| Resistor | CPU | 1.5K | chip 1608 | (Rohm) | R48 | SM\1.6-0.8 |
| Resistor | CPU | 1.5K | chip 1608 | (Rohm) | R59 | SM\1.6-0.8 |
| Resistor | CPU | 100k | chip 1608 | (Rohm) | R64 | SM\1.6-0.8 |
| Resistor | CPU | 100k | chip 1608 | (Rohm) | R65 | SM\1.6-0.8 |
| Resistor | CPU | 100k | chip 1608 | (Rohm) | R66 | SM\1.6-0.8 |
| Resistor | CPU | 100k | chip 1608 | (Rohm) | R67 | SM\1.6-0.8 |
| Resistor | CPU | 100k | chip 1608 | (Rohm) | R68 | SM\1.6-0.8 |
| Resistor | CPU | 100k | chip 1608 | (Rohm) | R69 | SM\1.6-0.8 |
| Resistor | CPU | 100k | chip 1608 | (Rohm) | R70 | SM\1.6-0.8 |
| Resistor | CPU | 100k | chip 1608 | (Rohm) | R71 | SM\1.6-0.8 |
| Resistor | CPU | 100k | chip 1608 | (Rohm) | R72 | SM\1.6-0.8 |
| Resistor | CPU | 100k | chip 1608 | (Rohm) | R73 | SM\1.6-0.8 |
| Resistor | CPU | 100k | chip 1608 | (Rohm) | R74 | SM\1.6-0.8 |
| Resistor | CPU | 10K | chip 1608 | (Rohm) | R10 | SM\1.6-0.8 |

| | | | | | | |
|---|---|---|---|---|---|---|
| Resistor | CPU | 10k | chip 1608 | (Rohm) | R11 | SM\1.6-0.8 |
| Resistor | CPU | 10k | chip 1608 | (Rohm) | R12 | SM\1.6-0.8 |
| Resistor | CPU | 10K | chip 1608 | (Rohm) | R13 | SM\1.6-0.8 |
| Resistor | CPU | 10k | chip 1608 | (Rohm) | R2 | SM\1.6-0.8 |
| Resistor | CPU | 10K | chip 1608 | (Rohm) | R3 | SM\1.6-0.8 |
| Resistor | CPU | 10K | chip 1608 | (Rohm) | R4 | SM\1.6-0.8 |
| Resistor | CPU | 10K | chip 1608 | (Rohm) | R5 | SM\1.6-0.8 |
| Resistor | CPU | 10k | chip 1608 | (Rohm) | R6 | SM\1.6-0.8 |
| Resistor | CPU | 10k | chip 1608 | (Rohm) | R7 | SM\1.6-0.8 |
| Resistor | CPU | 10K | chip 1608 | (Rohm) | R8 | SM\1.6-0.8 |
| Resistor | CPU | 10k | chip 1608 | (Rohm) | R78 | SM\1.6-0.8 |
| Resistor | CPU | 10K | chip 1608 | (Rohm) | R79 | SM\1.6-0.8 |
| Resistor | CPU | 10K | chip 1608 | (Rohm) | R80 | SM\1.6-0.8 |
| Resistor | CPU | 10K | chip 1608 | (Rohm) | R81 | SM\1.6-0.8 |
| Resistor | CPU | 10K | chip 1608 | (Rohm) | R82 | SM\1.6-0.8 |
| Resistor | CPU | 10K | chip 1608 | (Rohm) | R83 | SM\1.6-0.8 |
| Resistor | CPU | 10K | chip 1608 | (Rohm) | R84 | SM\1.6-0.8 |
| Resistor | CPU | 10k | chip 1608 | (Rohm) | R9 | SM\1.6-0.8 |
| Resistor | CPU | 15K | chip 1608 | (Rohm) | R42 | SM\1.6-0.8 |
| Resistor | CPU | 15K | chip 1608 | (Rohm) | R43 | SM\1.6-0.8 |
| Resistor | CPU | 15K | chip 1608 | (Rohm) | R44 | SM\1.6-0.8 |
| Resistor | CPU | 15K | chip 1608 | (Rohm) | R45 | SM\1.6-0.8 |
| Resistor | CPU | 15K | chip 1608 | (Rohm) | R46 | SM\1.6-0.8 |
| Resistor | CPU | 15K | chip 1608 | (Rohm) | R47 | SM\1.6-0.8 |
| Resistor | CPU | 15K | chip 1608 | (Rohm) | R60 | SM\1.6-0.8 |
| Resistor | CPU | 15K | chip 1608 | (Rohm) | R61 | SM\1.6-0.8 |
| Resistor | CPU | 1k | chip 1608 | (Rohm) | R28 | SM\1.6-0.8 |

| | | | | | | |
|---|---|---|---|---|---|---|
| Resistor | CPU | 1k | chip 1608 | (Rohm) | R29 | SM\1.6-0.8 |
| Resistor | CPU | 1k | chip 1608 | (Rohm) | R30 | SM\1.6-0.8 |
| Resistor | CPU | 1k | chip 1608 | (Rohm) | R31 | SM\1.6-0.8 |
| Resistor | CPU | 1k | chip 1608 | (Rohm) | R32 | SM\1.6-0.8 |
| Resistor | CPU | 1k | chip 1608 | (Rohm) | R33 | SM\1.6-0.8 |
| Resistor | CPU | 1k | chip 1608 | (Rohm) | R34 | SM\1.6-0.8 |
| Resistor | CPU | 1k | chip 1608 | (Rohm) | R35 | SM\1.6-0.8 |
| Resistor | CPU | 1k | chip 1608 | (Rohm) | R36 | SM\1.6-0.8 |
| Resistor | CPU | 1k | chip 1608 | (Rohm) | R37 | SM\1.6-0.8 |
| Resistor | CPU | 1k | chip 1608 | (Rohm) | R38 | SM\1.6-0.8 |
| Resistor | CPU | 1k | chip 1608 | (Rohm) | R39 | SM\1.6-0.8 |
| Resistor | CPU | 1k | chip 1608 | (Rohm) | R400 | SM\1.6-0.8 |
| Resistor | CPU | 1k | chip 1608 | (Rohm) | R98 | SM\1.6-0.8 |
| Resistor | CPU | 1k | chip 1608 | (Rohm) | R99 | SM\1.6-0.8 |
| Resistor | HeadPhone | 2.2k | chip 1608 | (Rohm) | R206 | SM\1.6-0.8 |
| Resistor | CPU | 2.2k | chip 1608 | (Rohm) | R75 | SM\1.6-0.8 |
| Resistor | CPU | 2.2k | chip 1608 | (Rohm) | R76 | SM\1.6-0.8 |
| Resistor | HeadPhone | 4.7K | chip 1608 | (Rohm) | R203 | SM\1.6-0.8 |
| Resistor | HeadPhone | 4.7K | chip 1608 | (Rohm) | R202 | SM\1.6-0.8 |
| Resistor | CPU | 4.7k | chip 1608 | (Rohm) | R1 | SM\1.6-0.8 |
| Resistor | HeadPhone | 47K | chip 1608 | (Rohm) | R201 | SM\1.6-0.8 |
| Resistor | HeadPhone | 47K | chip 1608 | (Rohm) | R200 | SM\1.6-0.8 |
| Resistor | CPU | 47K | chip 1608 | (Rohm) | R40 | SM\1.6-0.8 |
| Resistor | CPU | 47K | chip 1608 | (Rohm) | R41 | SM\1.6-0.8 |
| Resistor | HeadPhone | 5.6k | chip 1608 | (Rohm) | R208 | SM\1.6-0.8 |
| Resistor | HeadPhone | 5.6k | chip 1608 | (Rohm) | R207 | SM\1.6-0.8 |
| Resistor | HeadPhone | 1(1/6 W) | 小型P=5.0 | | R204 | |

| | | | | | | |
|---|---|---|---|---|---|---|
| Resistor | HeadPhone | 1(1/6 W) | 小型P=5.0 | | R205 | |
| Resistor | HeadPhone | 10 (1/6 W) | 小型P=5.0 | | R212 | |
| Resistor | HeadPhone | 10 (1/6 W) | 小型P=5.0 | | R211 | |
| Switch | Control | SKHHDHA010(h=17) | | ALPS | SW118 | SKHH2 |
| Switch | Control | SKHHDHA010(h=17) | | ALPS | SW119 | SKHH2 |
| Switch | Control | SKHHDHA010(h=17) | | ALPS | SW120 | SKHH2 |
| Switch | Control | SKHHDHA010(h=17) | | ALPS | SW121 | SKHH2 |
| Switch | Control | SKHHDHA010(h=17) | | ALPS | SW122 | SKHH2 |
| Switch | Control | SKHHDHA010(h=17) | | ALPS | SW123 | SKHH2 |
| Switch | Control | SKHHDHA010(h=17) | | ALPS | SW124 | SKHH2 |
| Switch | Control | SKHHDHA010(h=17) | | ALPS | SW125 | SKHH2 |
| Switch | Control | SKRGAED010 | | ALPS | SW100 | SKRG1 |
| Switch | Control | SKRGAED010 | | ALPS | SW101 | SKRG1 |
| Switch | Control | SKRGAED010 | | ALPS | SW102 | SKRG1 |
| Switch | Control | SKRGAED010 | | ALPS | SW103 | SKRG1 |
| Switch | Control | SKRGAED010 | | ALPS | SW104 | SKRG1 |
| Switch | Control | SKRGAED010 | | ALPS | SW105 | SKHH |
| Switch | Control | SKRGAED010 | | ALPS | SW106 | SKHH |
| Switch | Control | SKRGAED010 | | ALPS | SW107 | SKRG |
| Switch | Control | SKRGAED010 | | ALPS | SW108 | SKHH |
| Switch | Control | SKRGAED010 | | ALPS | SW109 | SKRG |
| Switch | Control | SKRGAED010 | | ALPS | SW110 | SKHH |
| Switch | Control | SKRGAED010 | | ALPS | SW111 | SKHH |
| Switch | Control | SKRGAED010 | | ALPS | SW112 | SKHH |
| Switch | Control | SKRGAED010 | | ALPS | SW113 | SKHH |
| Switch | Control | SKRGAED010 | | ALPS | SW114 | SKRG |
| Switch | Control | SKRGAED010 | | ALPS | SW115 | SKHH |

| | | | | | | |
|---|---|---|---|---|---|---|
| Switch | Control | SKRGAED010 | | ALPS | SW116 | SKHH |
| Switch | Control | SKRGAED010 | | ALPS | SW117 | SKHH |
| Switch | Control | SKRGAED010 | | ALPS | SW126 | SKRG |
| Transistor | CPU | 2SC1959Y | TO-92MOD | Toshiba | Q10 | TR1 |
| Transistor | CPU | 2SC1959Y | TO-92MOD | Toshiba | Q11 | TR1 |
| Transistor | CPU | 2SC1959Y | TO-92MOD | Toshiba | Q12 | TR1 |
| Transistor | CPU | 2SC1959Y | TO-92MOD | Toshiba | Q13 | TR1 |
| Transistor | CPU | 2SC1959Y | TO-92MOD | Toshiba | Q9 | TR1 |
| Transistor | HeadPhone | 2SC2655Y | TO-92MOD | Toshiba | Q200 | TR1 |
| Transistor | CPU | 2SC2655Y | TO-92MOD | Toshiba | Q7 | TR1 |
| Transistor | CPU | DTA114YSA | SC-72 | Rohm | Q1 | DTA114 |
| Transistor | CPU | DTA114YSA | SC-72 | Rohm | Q2 | DTA114 |
| Transistor | CPU | DTA114YSA | SC-72 | Rohm | Q3 | DTA114 |
| Transistor | CPU | DTA114YSA | SC-72 | Rohm | Q4 | DTA114 |
| Transistor | CPU | DTA114YSA | SC-72 | Rohm | Q5 | DTA114 |
| Transistor | CPU | DTA114YSA | SC-72 | Rohm | Q6 | DTA114 |
| Volume | Control | RA45D1F-220-15C1-B10K-0050 | | taiwan alpha | VR1 | RA45D1F |
| Volume | Control | RK09L1140 10kB | | ALPS | VR102 | RK09L1140 |
| Volume | Control | RK09L1140 10kB | | ALPS | VR103 | RK09L1140 |
| Volume | Control | RK09L1140 10kB | | ALPS | VR104 | RK09L1140 |
| Volume | Control | RK09L1140 10kB | | ALPS | VR105 | RK09L1140 |
| Volume | Control | RK09L1140 10kB | | ALPS | VR106 | RK09L1140 |
| Volume | Control | RK09L1140 10kB | | ALPS | VR107 | RK09L1140 |
| Volume | Control | RK09L1140 10kB | | ALPS | VR108 | RK09L1140 |
| Volume | Control | RK09L1140 10kB | | ALPS | VR109 | RK09L1140 |
| Volume | Control | RK09L1140 10kB | | ALPS | VR110 | RK09L1140 |
| Volume | Control | RK09L1140 10kB | | ALPS | VR111 | RK09L1140 |

| | | | | | | |
|---|---|---|---|---|---|---|
| Volume | Control | RK09L1140 10kB | | ALPS | VR112 | RK09L1140 |
| Volume | Control | RK09L1140 10kB | | ALPS | VR113 | RK09L1140 |
| Volume | Control | RK09L1140 10kB | | ALPS | VR114 | RK09L1140 |
| Volume | Control | RK271 111-F15-C0-B103 | | ALPS | VR2 | RK271 |
| Volume | Control | RK271 111-F15-C0-B103 | | ALPS | VR3 | RK271 |
| Volume | Control | RS60111-0620-C1-P1-B103 | | ALPS | VR101 | RS60111 |
| Volume | Control | RS60111-0620-C1-P1-B103 | | ALPS | VR100 | RS60111 |
| Volume | CPU | SV68010F-0203-4V-LV | | taiwan alpha | SW2 | SV68010-0203-LV2 |
| Volume | CPU | SV68010F-0203-4V-LV | | taiwan alpha | SW1 | SV68010-0203-LV2 |
| 実装無し | CPU | N.M | | | R62 | SM\1.6-0.8 |
| 実装無し | CPU | N.M | | | R63 | SM\1.6-0.8 |
| 実装無し | CPU | N.M(TDK ZJY51R5-2P-01) | | | L11 | |