SERVICE MANUAL

MODEL: VCI-100MKII

STANDARD SETTING

Control part	Setup location
HP Level VR	Max
Input Level VR	Max

* Test with adapter (7.5V 1A)

* Headphone Loading Z= 34Ω (68Ω ‖ 68Ω)

Software : Cubase SX on Windows XP

OUTPUT PERFORMANCE TEST：

	Measurement signal	Signal from Cubase SX by USB	Specification	Remark
Output Level	Master Output 1/2	1KHz,0dBV Sine Wave	5.8dBV±0.2dBV	Flter : none
	Headphone Output	1KHz,0dBV Sine Wave	4.4dBV±0.2dBV	Flter : none
THD+N	Master Output 1/2	1KHz,0dBV Sine Wave	Less than 0.02%	Flter : "A"
	Headphone Output	1KHz,0dBV Sine Wave	Less than 0.09%	Flter : "A"
S/N Ratio	Master Output 1/2	no singnal input	Less than -80dBV	Flter : "A"
	Headphone Output	no singnal input	Less than -80dBV	Flter : "A"
Separating Crosstalk	Master Output 1/2	1KHz,0dBV Sine Wave	Less than -80dBV	Flter : "A"
	Headphone Output	1KHz,0dBV Sine Wave	Less than -70dBV	Flter : "A"
Frequency Response	Master Output 1/2	20Hz,0dBV Sine Wave	±2dBV Compare with 1KHz,0dBV output level	Flter : none
		100Hz,0dBV Sine Wave	±2dBV Compare with 1KHz,0dBV output level	Flter : none
		10KHz,0dBV Sine Wave	±2dBV Compare with 1KHz,0dBV output level	Flter : none
		20KHz,0dBV Sine Wave	±2dBV Compare with 1KHz,0dBV output level	Flter : none

OUTPUT PERFORMANCE TEST：

	Measurement signal	Signal from Cubase SX by USB	Specification	Remark
Frequency Response	Headphone Output	20Hz,0dBV Sine Wave	±2dBV Compare with 1KHz,0dBV output level	Flter : none
		100Hz,0dBV Sine Wave	±2dBV Compare with 1KHz,0dBV output level	Flter : none
		10KHz,0dBV Sine Wave	±2dBV Compare with 1KHz,0dBV output level	Flter : none
		20KHz,0dBV Sine Wave	±2dBV Compare with 1KHz,0dBV output level	Flter : none

INTPUT PERFORMANCE TEST：

Input signal setting on AP："1KHz , 0dBV"；"Sine Wave"；"Unbalance output"；"Output impedance Z = 50Ω".
Record the signal from AP to Cubase SX by VCI-100MKII (Sound Card) , than output the recorded signal form Cubase SX.

Measure the signal of Master output 1

	Measurement signal	Signal from Cubase SX by USB	Specification	Remark
Output Level	Master Output 1	Recorded signal by VCI-100MKII	5.6dBV±0.2dBV	Flter : none
THD+N	Master Output 1	Recorded signal by VCI-100MKII	Less than 0.03%	Flter : "A"

VCI-100MKII TEST PROCEDURE (MIDI)

No.	Description	Example
1	Connect VCI-100MKII to PC.	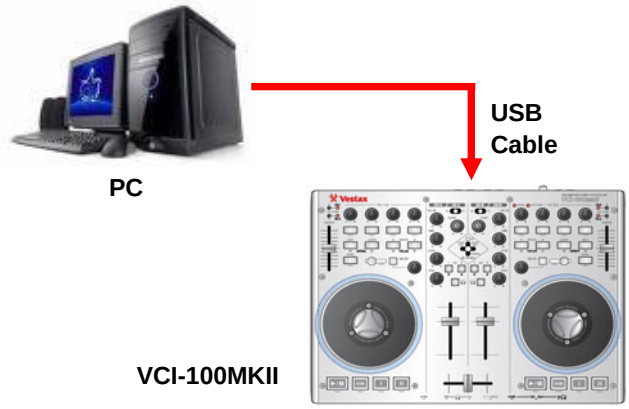
2	Double click the Midi device Icon	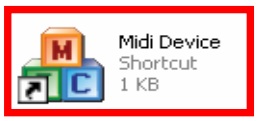
3	The Testing Browser will prompt out.	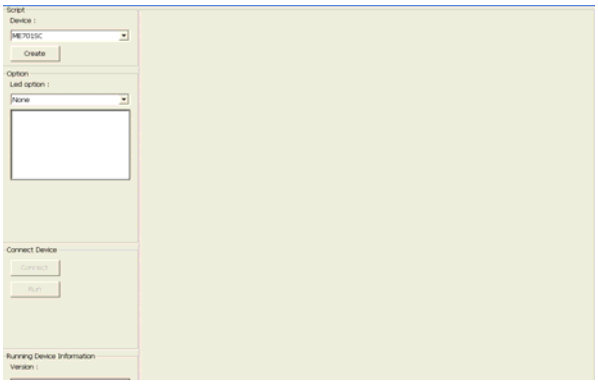
4	Choose VCI100MKII - V1.5.	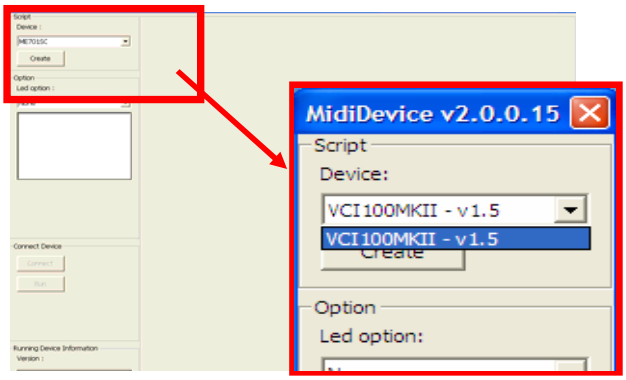
5	VCI-100MKII virtual panel will prompt out. Please click "Connect" and wait for few second untill the "Run" button prompt out. Click "Run", VCI-100MKII is ready to use.	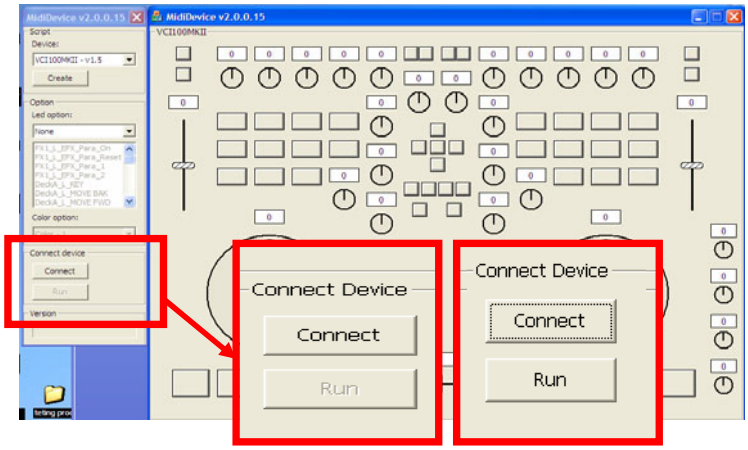

VCI-100MKII TEST PROCEDURE (MIDI)

No.	Description	Example
6	Press "Run" button, each of the button, jog wheel and VR will become red color.	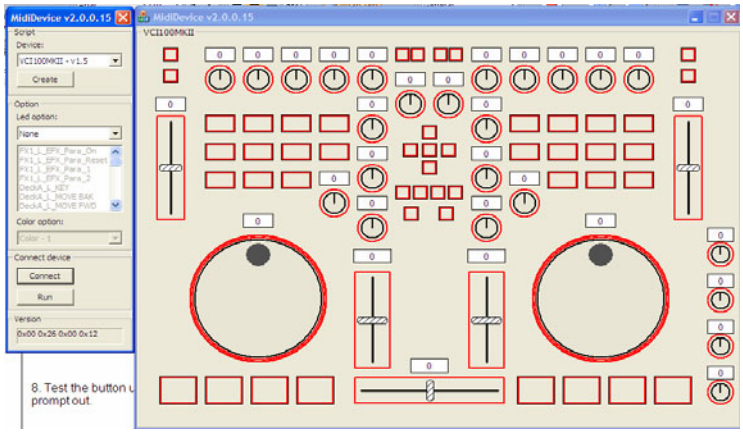
7	Start to test VCI-100MKII by press button, scrath Jog wheel, and slide VR. Once the button, jog wheel and VR were tested. The virtual panel button, jog wheel and VR will become blue color. Attn: Please test button, jog wheel and VR one by one.	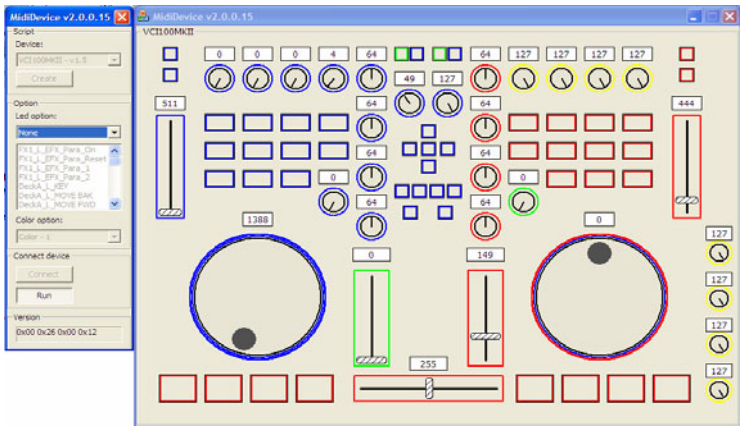
8	Test the button untill the "Complete" word prompt out.	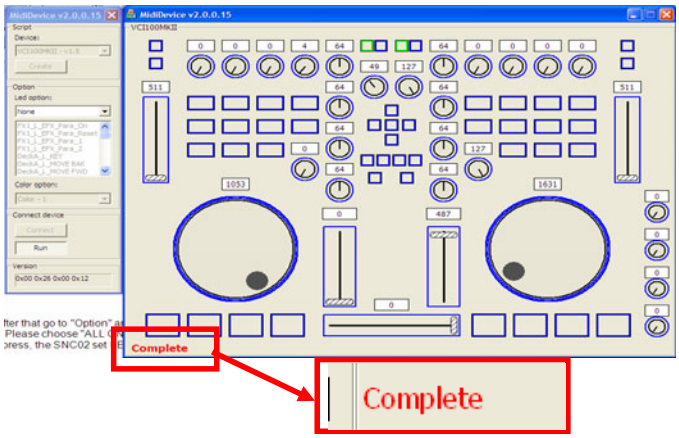
9	After that go to "Option" and click on the slide bar. Please choose "ALL ON". Once the button are press, the VCI-100MKII set 1st set of LED will all On.	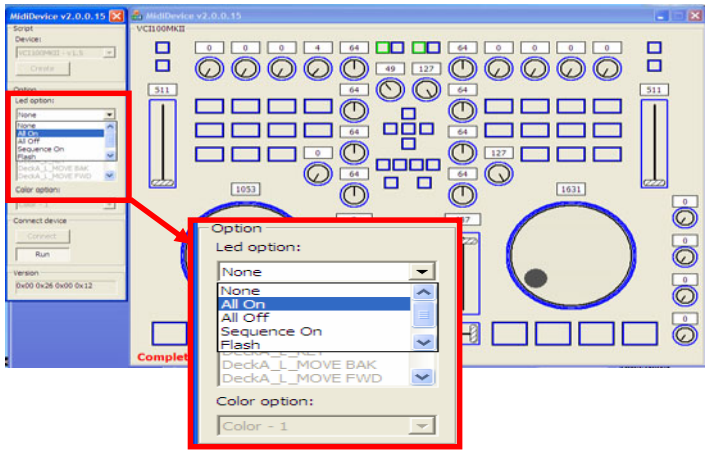

VCI-100MKII TEST PROCEDURE (MIDI)

No.	Description	Example
10	Go to color option choose "color-2". Press on the "Shift Button" and Hold on then press on the "FX-4 button" . Switch to channel C and channel D. The 2nd set of LED will On. **Attn: The LED brigthness is Low.**	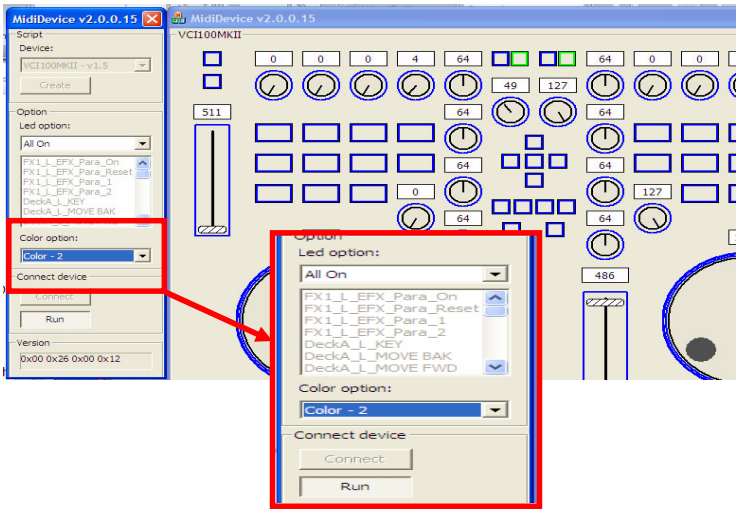 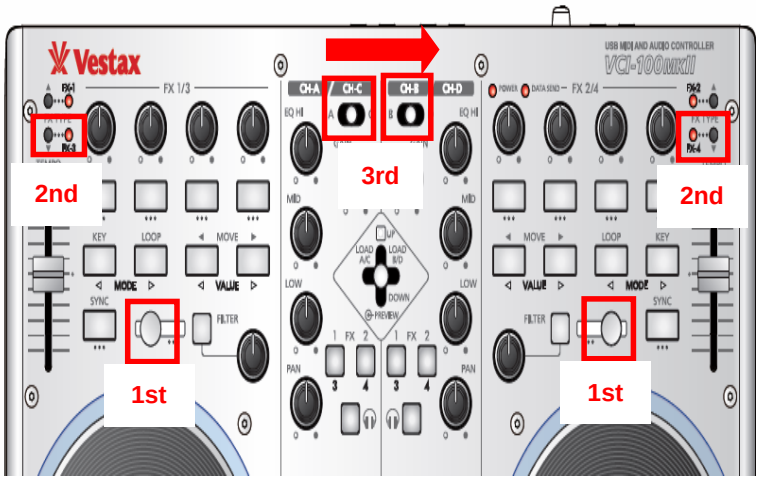

VCI-100MKII TEST PROCEDURE (LabView)

No.	Description	Example
1	Connect VCI-100MKII to PC and connect master 1/2, input & H/P to PC NI daq Attn: Please prepare adaptor 7.5V 1A, heaphone with impedance 34 ohm.	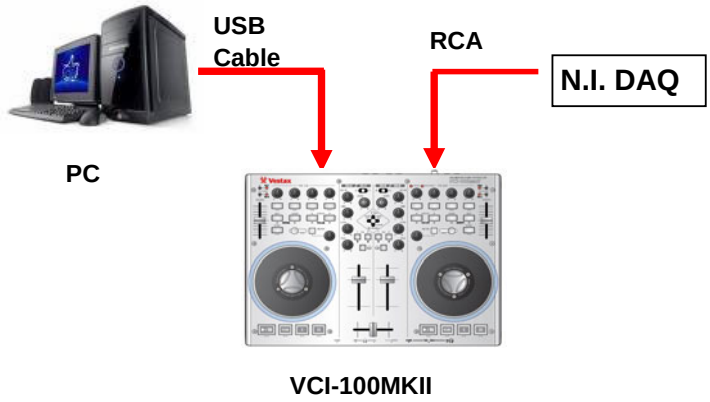
2	Double click the N.I. Icon	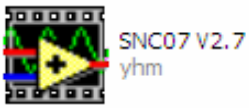
3	The Testing Browser will prompt out and please click on the "MASTER 1" Button. Follow the instruction below: I. Open Mixcraft 4 (VCI-100MKII Sound Card)--Preferences--Default ouput(playback) set to 1/1 II. Play the sound III. Press Continue	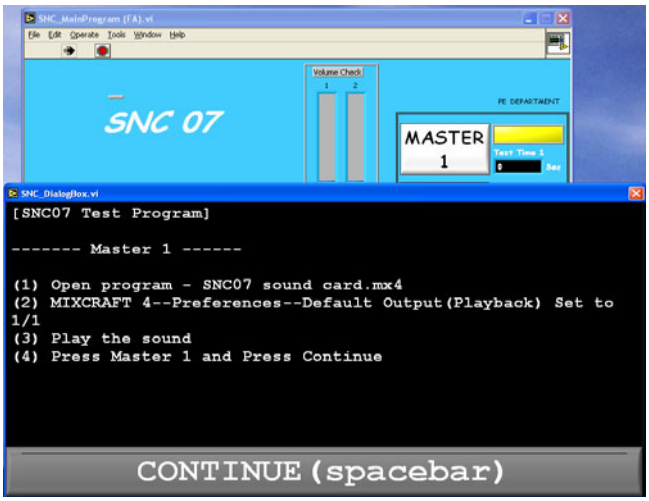
4	The Testing Browser will prompt out and please click on the "MASTER 2" Button. Follow the instruction below: I. Open Mixcraft 4 (VCI-100MKII Sound Card)--Preferences--Default ouput(playback) set to 1/3 II. Play the sound III. Press Continue	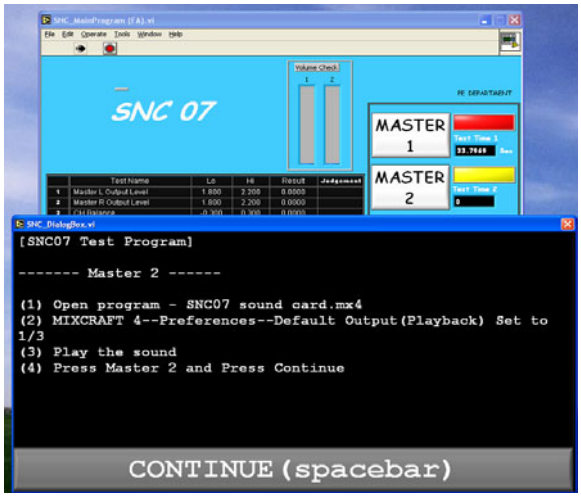

VCI-100MKII TEST PROCEDURE (LabView)

No.	Description	Example
5	The Testing Browser will prompt out and please click on the "H/P" Button. Follow the instruction below: I. Open Mixcraft 4(VCI-100MKII Sound Card)--Preferences--Default ouput(playback) set to 1/3 II. Turn HP volume to MAX II. Play the sound III. Press Con	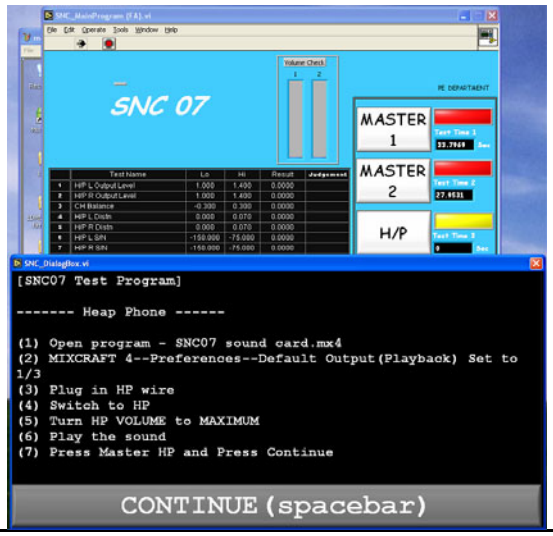
6	The Testing Browser will prompt out and please click on the "Record" Button. Follow the instruction below: I. Open Mixcraft 4 (VCI-100MKII Record)--Preferences--Default ouput(playback) set to 1/3 II. Unplug HP Wire II. Turn Record Volume to Max III. Pres	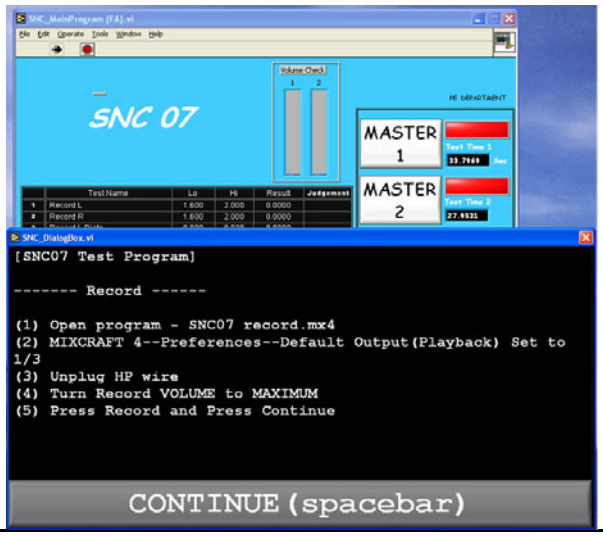

DISASSEMBLY PROCEDURES

1. REMOVAL OF PLASTIC HOLDER OF JOG WHEEL ASS'Y. (Fig. 1)
   (a) Remove 3pcs of screw each side from Plastic Holder of Jog Wheel.

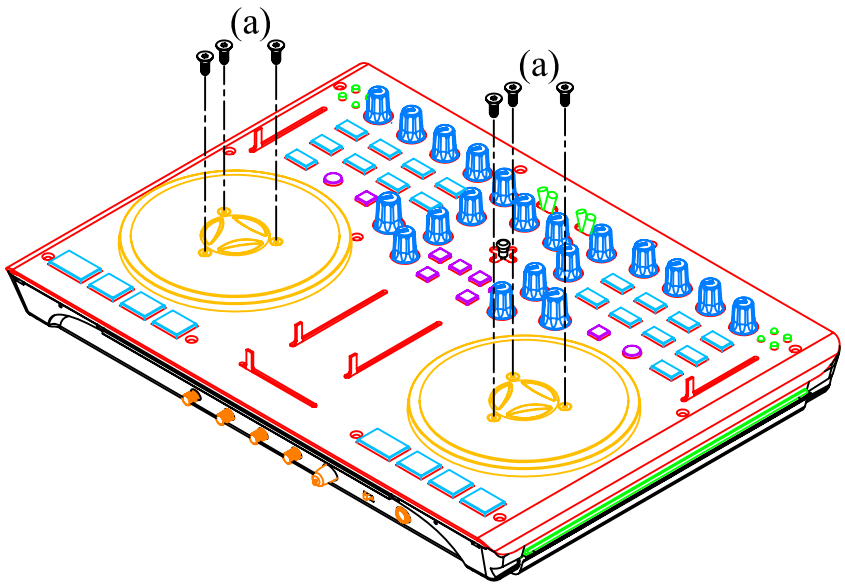

(Fig. 1)

2. REMOVAL OF FRONT PANEL ASS'Y. (Fig. 2)
   (a) Remove 4pcs of knobs from the front panel.
   (b) Unscrew or remove 4pcs of screw from the front panel.
   (c) Remove 10pcs of screw from the front panel.

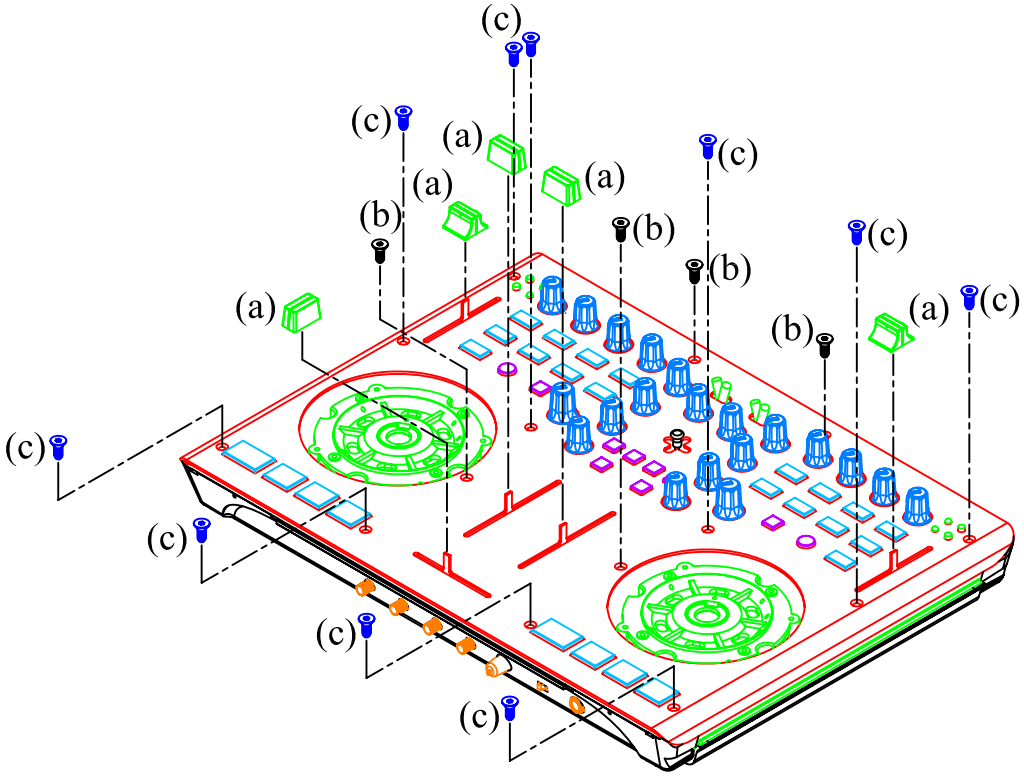

(Fig. 2)

DISASSEMBLY PROCEDURES

3. REMOVAL OF PCB'S FROM BOTTOM BOARD. (Fig. 3)
   (a) Remove a PCB Ass'y (Controller) from a Bottom Board.
   (b) Unscrew and remove 4pcs of screw from PCB Ass'y (Cross Fader).
   (c) Unscrew and remove 2pcs of screw from PCB Ass'y (Line Fader).

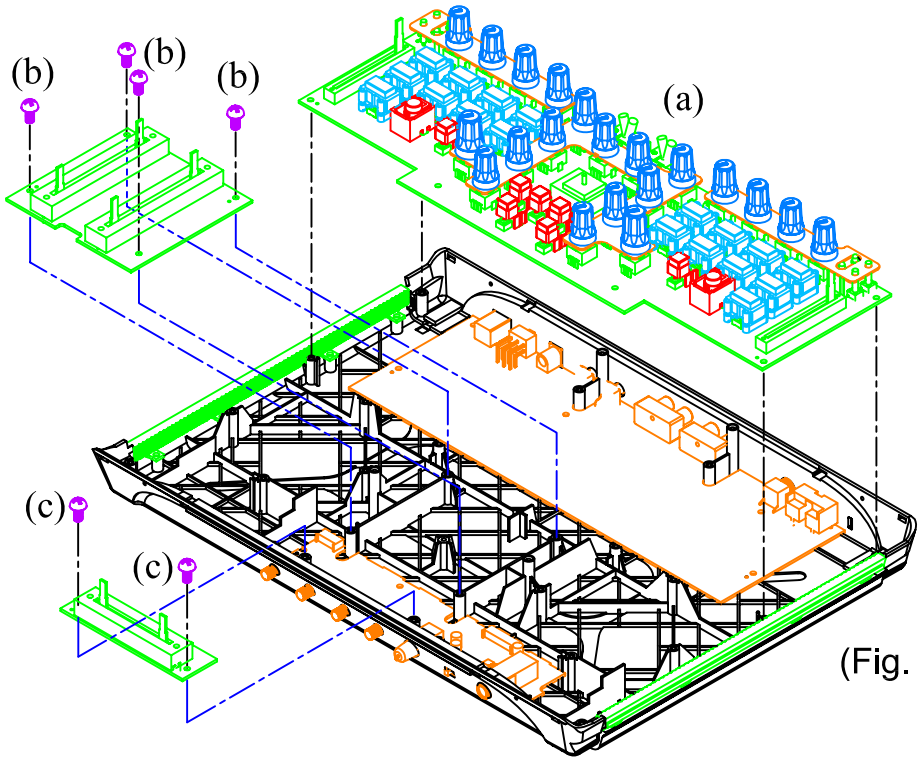

(Fig. 3)

4. REMOVAL OF PCB'S FROM BOTTOM BOARD. (Fig. 4)
   (a) Remove Knob VR (2pcs) from PCB Ass'y (Front Panel & Sound Card)
   (b) Unscrew and remove 5pcs of screw from PCB Ass'y (Sound Card)
   (c) Unscrew and remove 4pcs of screw from PCB Ass'y (Front Panel)

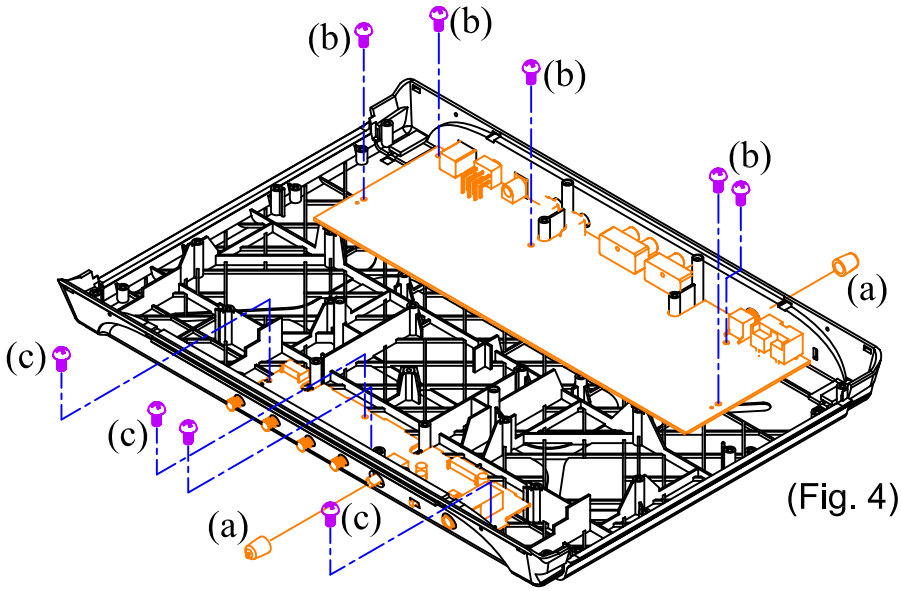

(Fig. 4)

WIRING DIAGRAM
MODEL: VCI-100MKII

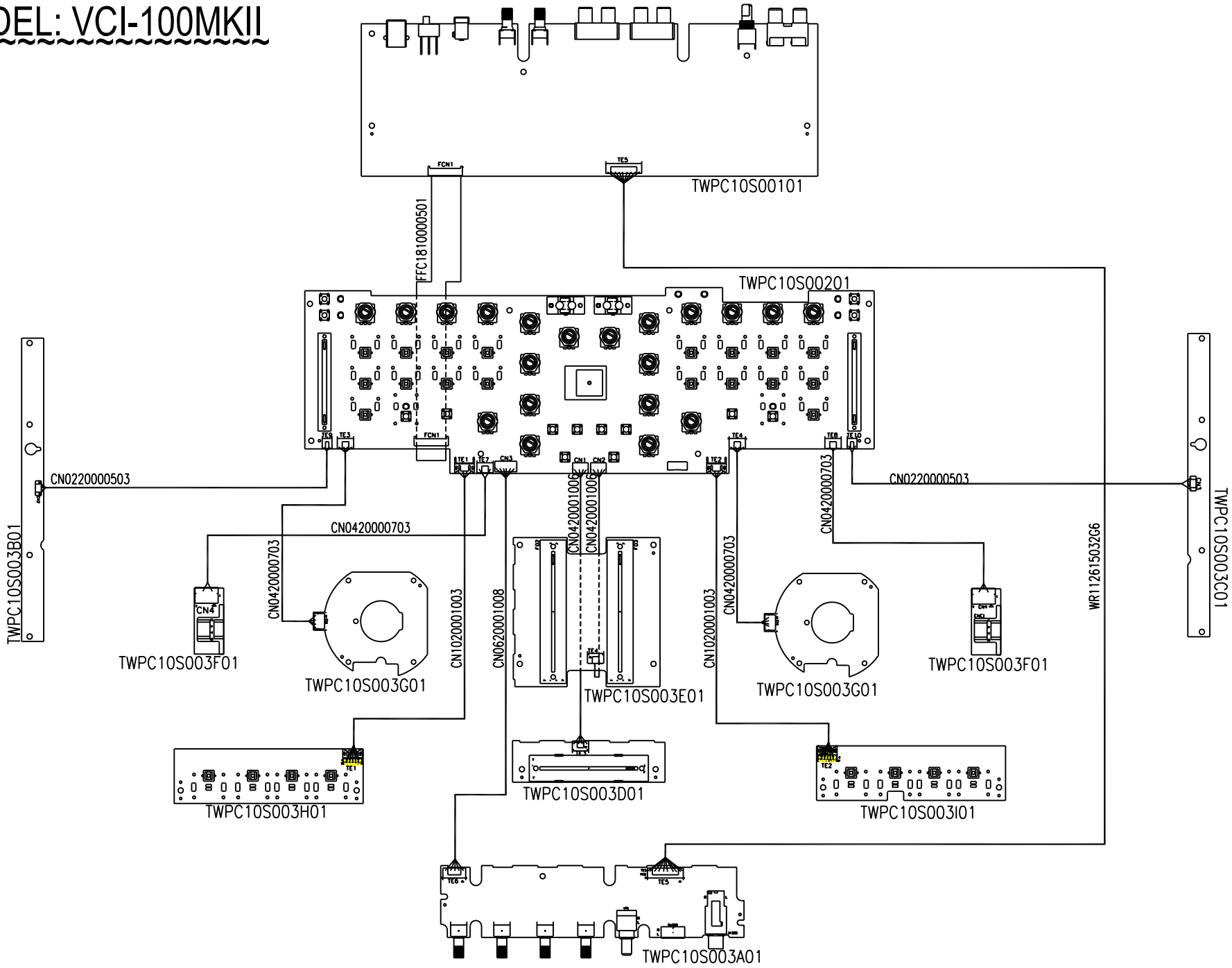

PACKING DIAGRAM
MODEL: VCI-100MKII

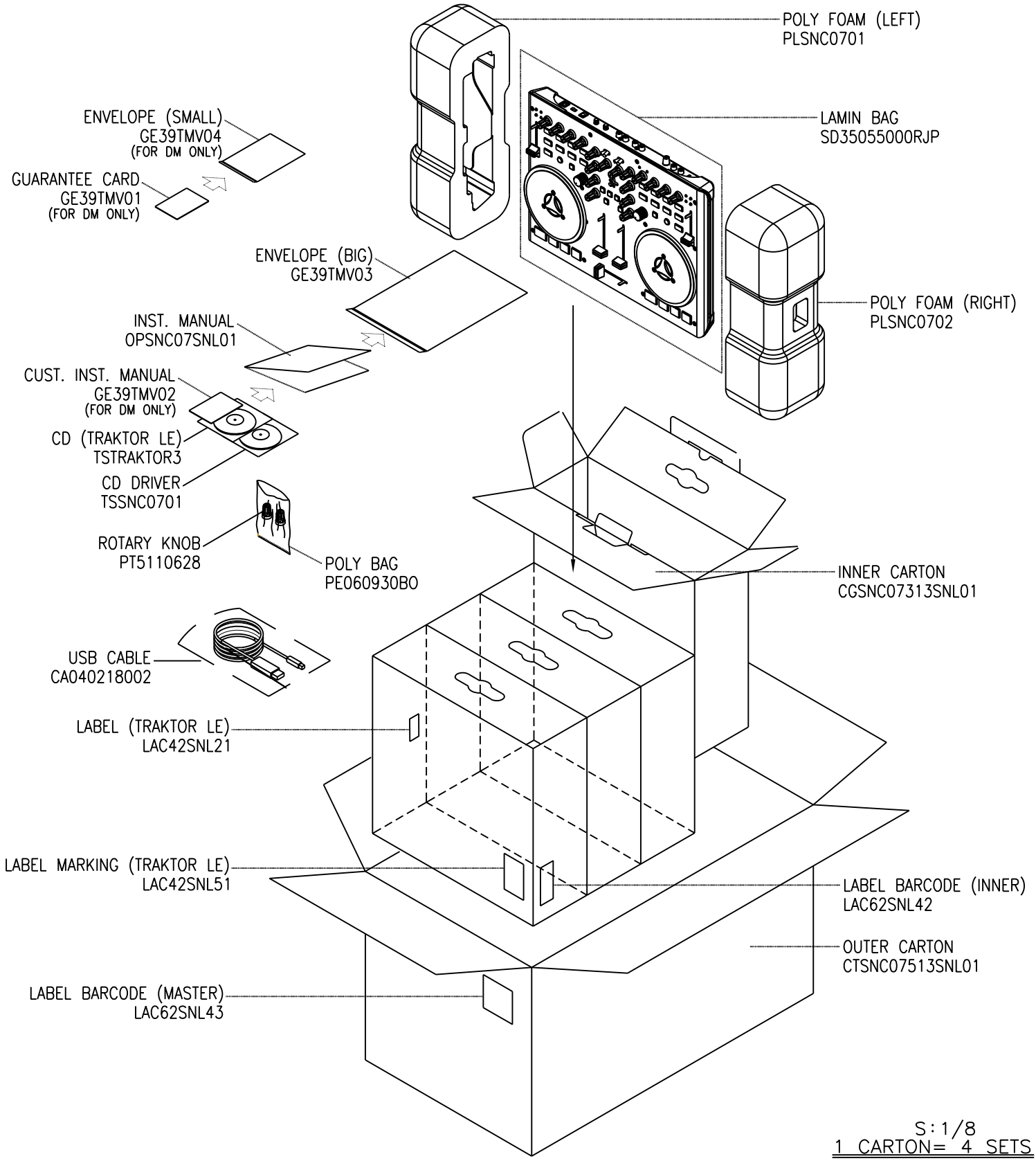

S:1/8
1 CARTON= 4 SETS

EXPLODED VIEW
MODEL: VCI-100MKII

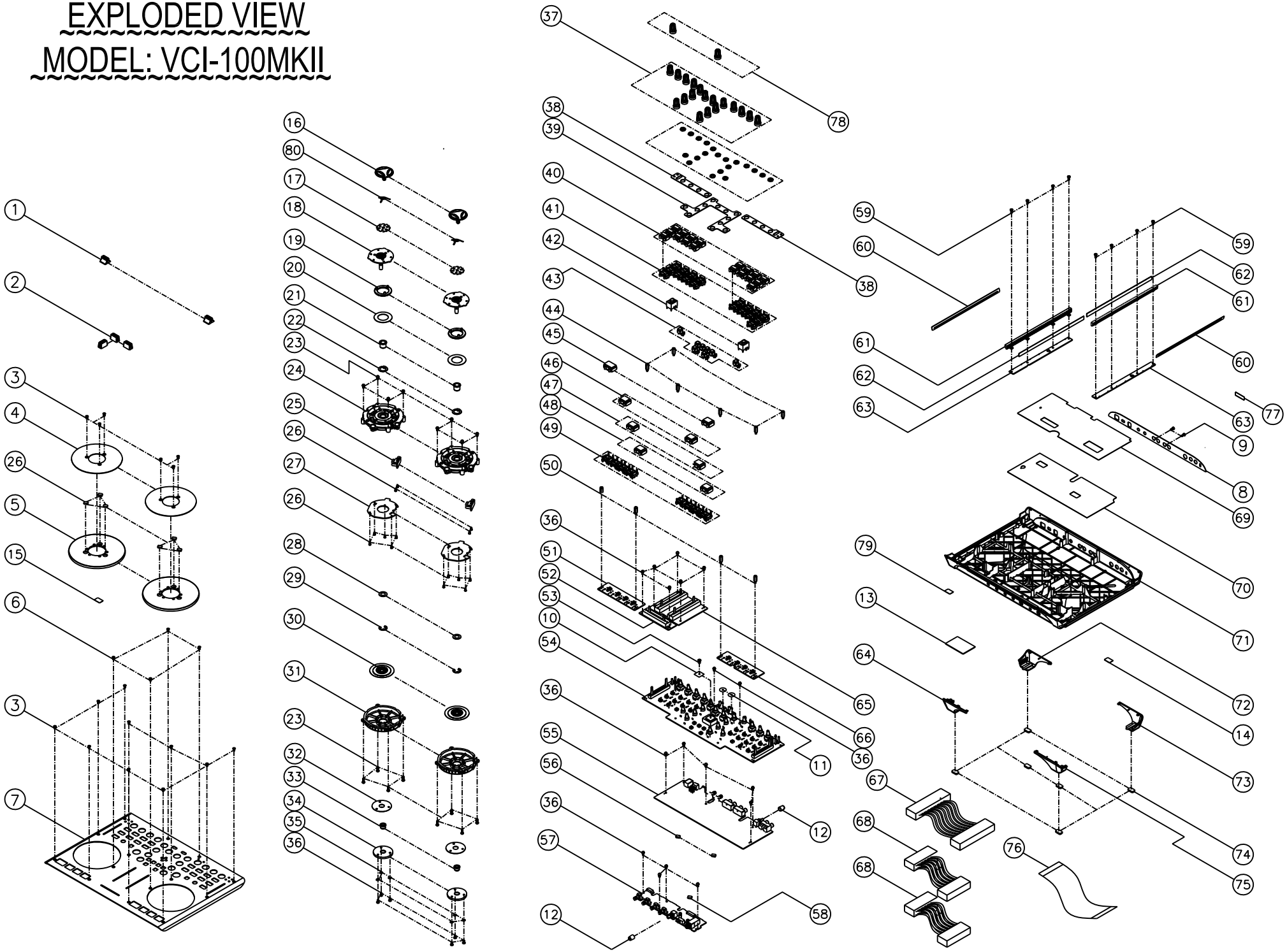

VCI-100MKII (BOM)

Lvl	Materials	SPECS	Qty	Part Location
.1	BA244452012MC	FADER KNOB W/MATT CHROME	3	2
.1	BA244684010	SLIDER KNOB (2446-8401-0)	2	1
.1	BAHUB-158B	USB 2.0 HUB BLACK	1	
.1	CGSNC07313SNL01	INNER CARTON	1	
.1	CTSNC07513SNL01	OUTER CARTON	0.25	
.1	GE39TMV01	GUARANTEE CARD	1	FOR DM VERSION USE
.1	GE39TMV02	CUSTOMER INSTRUCTION CARD	1	FOR DM VERSION USE
.1	GE39TMV03	ENVELOPE (BIG)	1	
.1	GE39TMV04	ENVELOPE (SMALL)	1	FOR DM VERSION USE
.1	LAC42SNL21	LABEL (TRAKTOR LE)	1	
.1	LAC42SNL51	LABEL MARKING (TRAKTOR LE)	1	
.1	LAC42SNL53	LABEL (C-TICK)	1	79
.1	LAC42SNL58	LABEL (TRAKTOR READY)	1	15
.1	LAC52SNL44	LABEL (SAFETY)	1	13
.1	LAC62SNL30	LABEL (LICENSE NUMBERS) SNC07	1	14
.1	MT510440601	FIXED PLATE (RING) W/SPRAYING	2	4
.1	MT513000601	FRONT PANEL W/SPRAYING & PRINTING	1	7
.1	NM5106104	VELVET CARPET (ROUND)	2	11
.1	NM5106105	VELVET CARPET (SQUARE)	1	10
.1	NP251SNL14	NAME PLATE (REAR PANEL)	1	8
.1	OPSNC07SNL01	INSTRUCTION MANUAL	1	
.1	PLSNC0701	POLY FOAM (LEFT)	1	
.1	PLSNC0702	POLY FOAM (RIGHT)	1	
.1	PT5104409	PLASTIC HOLDER (JOG WHEEL)	2	5
.1	PT511063501	KNOB VR W/SPRAYING	2	12
.1	SC0308AINI	HEX HEAD SCREW (FLAT) (M3X8MM)	16	3
.1	SC0308F2BNI	SCREW (3X8MM) TAPPING	4	6
.1	SC0308PBBI	SCREW	2	9
.1	SD35055000RJP	LAMIN BAG	1	
.1	SPSASAW0502000E	SWITCH POWER ADAPTOR TYPE DC 5V 2A EU	1	FOR EC VERSION USE
.1	SPSASAW0502000	SWITCH POWER ADAPTOR TYPE DC 5V 2A UL	1	FOR US & DM VERSION USE
.1	SPSASAW0502000K	SWITCH POWER ADAPTOR TYPE DC 5V 2AUK	1	FOR UK VERSION USE
.1	TSSNC0701	SNC07 CD DRIVER	1	
.1	TSTRAKTOR03	TRAKTOR LE SOFTWARE CD (FOR SNC07)	1	
.1	TWSNC07SNL01	DIGITAL CONTROLLER ASS'Y	1	
..2	CA040218002	USB CABLE (BLACK) + CORE	1	
..2	CN1020001003	CONNECTOR WIRE 5P*2/2.0/100MM	2	68
..2	FFC1810000501	FFC CABLE 18P 1.0MM 50MM	1	76
..2	LAC22SNL29	LABEL (SERIAL NO.)	1	77
..2	LAC62SNL42	LABEL BARCODE (INNER)	1	
..2	LAC62SNL43	LABEL BARCODE (MASTER)	1	
..2	MT5101801	GROUNDING PLATE	2	22
..2	MT5101803	METAL PLATE	2	17
..2	MT5101804	METAL HOLDER	2	80
..2	MT5104412	FIXED PLATE	2	38
..2	MT5104413	FIXED PLATE	1	39
..2	MT5105507	COPPER STUD	4	50
..2	MT5105508	COPPER STUD	6	44
..2	MT5105509	SHAFT HOLDER	2	21
..2	MT5105511	SHAFT HOLDER	2	33
..2	MT5110602	STICK KNOB	1	53
..2	NM5110607	VELVET CARPET	2	32
..2	NP251SNL12	NAME PLATE (GASKET)	2	20
..2	NP251SNL18	NAME PLATE (LIGHT SHADE)	2	60
..2	NP251SNL21	NAME PLATE (INSULATOR)	1	69
..2	NP351SNL20	ALUMINIUM FOIL	1	70
..2	NP351SNL22	ALUMINIUM FOIL	2	62
..2	PE060930BO	POLYBAG (0.0005 KG/PCS)-1900 PCS/KG	0.001	
..2	PT5104301	PLASTIC PLATE	2	19
..2	PT510440801	PLASTIC HOLDER W/SPRAYING	2	16
..2	PT5104410	HOLDER	2	24
..2	PT5104411	PLASTIC HOLDER (SUPPORT)	2	34

Lvl	Materials	SPECS	Qty	Part Location
..2	PT510441201	PLASTIC HOLDER (LEFT FRONT) W/SPRAYING	1	64
..2	PT510441301	PLASTIC HOLDER (LEFT REAR) W/SPRAYING	1	72
..2	PT510441401	PLASTIC HOLDER (RIGHT FRONT) W/SPRAYING	1	75
..2	PT510441501	PLASTIC HOLDER (RIGHT REAR) W/SPRAYING	1	73
..2	PT5110617	8MM ANGULAR TAKT SWITCH KNOB	8	43
..2	PT5110621	BUTTON (ROUND)	2	42
..2	PT5110622	LED HOLDER	2	61
..2	PT5110628	KNOB (VR)	4	78
..2	PT5110630	BUTTON GUIDE	8	49
..2	PT5110631	BUTTON (15*8MM)	18	40
..2	PT511063201	BUTTON (CUE)	2	46
..2	PT511063202	BUTTON (I)	2	47
..2	PT511063203	BUTTON (II)	2	48
..2	PT511063301	BUTTON W/PRINTING	2	45
..2	PT5110634	BUTTON GUIDE	18	41
..2	PT511063601	ROTARY KNOB (BLACK & WHITE LINE)	18	37
..2	PT5130302	BOTTOM BOARD (JOG WHEEL) SNC07	2	31
..2	PT513030301	BOTTOM BOARD	1	71
...3	PT5130303	BOTTOM BOARD	1	
..2	PU0070070008	CONDUCTIVE FOAM	1	58
..2	PU007007004	CONDUCTIVE FOAM	8	56
..2	RN109111	E RING(9MM)	2	29
..2	RU5104401	RUBBER FOOT	6	74
..2	SC0306PBBI	SCREW	23	36
..2	SC0308PBBI	SCREW	8	59
..2	SC0310RBNI	SCREW-RoHS	16	23
..2	SC2605RBNI	SCREW	14	26
..2	**TWMT5105505**	**JOG WHEEL ASS'Y**	**2**	**18**
...3	MT5104407	METAL HOLDER	1	
...3	MT5105505	METAL SHAFT (JOG WHEEL)	1	
...3	MT5105506	SHAFT HOLDER	1	
..2	**TWNP651SNL13**	**SHADER SHEET ASS'Y**	**2**	**30**
...3	MT0704473	SHADER FIXED PLATE	2	
...3	MT5104408	HOLDER (METAL)	1	
...3	NP651SNL13	SHADER SHEET	1	
...3	RN0416001	16MM CS RING	1	
...3	SC0303SIBI	SCREW	1	
..2	**TWPC10S00101**	**PCB ASS'Y SOUND CARD**	**1**	**55**
...3	AL2-51-0140	DIODE POWER SCHOTTKY MBRS140LT3 40V 1A	2	ZD903, 904
...3	AL2-61-7223	IC REG VOLTAGE NJU7223DL1-33 3.3V TO-252	2	IC902, 903
...3	AL2-71-0074	IC MC33079 QUAD-OP-AMP SOP-14 (TL074)	2	IC701, 703
...3	AL2-75-4344	IC CONVERTER D/A CS4344 24BIT 192KHZ (12S) TSSOP10	2	IC700, 702
...3	CS100J5003NPO	C. CAP. SMD 10 PF 50V 5% 0603 NPO	2	C203, 204
...3	CS101J5003NPO	CHIP CAPACITOR SMD 100P/50V ±5% 0603 NPO-ROHS	6	C401, 706, 707, 716, 717, 911
...3	CS102K5003X7R	CHIP CAP 1000PF/50V,X7R,+/-10%, SMD 0603	7	C201, 202, 402, 708, 709, 718, 719
...3	CS103K5003X7R	C.CAP 0.010UF 50V X7R,±10% SMD 0603	2	C210, 211
...3	CS104K5003X7R	CHIP CAP 0.1UF/50V,X7R,+/-10%, SMD 0603	33	C205~209, 405, 410~417, 700~703, C710~713, 901~907, 913~916
...3	CS270J5003NPO	CHIP CAP 27PF/50V NPO ±5% SMT 0603	2	C408, 409
...3	CS300J5003NPO	CHIP CAPACITOR 30PF, NPO, +/-5%, 50V	2	C403, 404
...3	CS332J5003X7R	C.CAP 3300PF/50V,X7R,+/-5%,SMD 0603	4	C704, 705, 714, 715
...3	CS471J5003NPO	C. CAP. SMD 470 pF 50V 5% 0603 NPO	1	C910
...3	CS472K5003X7R	CHIP CAP 4.7NF 50V 10% 0603 X7R	2	C406, 407
...3	CS473K5003X7R	C.CAP 0.047UF 50V X7R 0603	1	C720
...3	DI1SS352SM	DIODE 1SS352 HE1A	4	D700~703
...3	DIEN1N4148WSM	DIODE FAST SWICTHING 1N4848W SOD-123	2	D801, 802
...3	DISR26	SCHOTTKY BARRIER RECTIFIER SMD	2	ZD905, 909
...3	ECS10625B	E.CAPACITOR 10UF/25V SMD-B	16	EC203~205, 700~711, 910
...3	ECS10625CL	E.CAP 10UF/25V C TYPE SMD LOW LEAKAGE	1	EC801
...3	ECS10725D8	E.CAP 100UF/25V 6.3*7.7MM SMD	3	EC901, 912, 914
...3	ECS10725FLE	E.CAP 100UF/25V F TYPESMD LOW ESR	3	EC902, 909, 911
...3	ECS22725F	E.CAP 220UF/25V F TYPE SMD	1	EC802
...3	ECS47450B	E.CAP 0.47UF/50V 4*5.3MM SMD	2	EC201, 202
...3	ECS47550B	E.CAP 4.7UF/50V 4*5.3MM SMD	4	EC903~905, 907

Lvl	Materials	SPECS	Qty	Part Location
...3	ECS47625D	E.CAP 47UF/25V D TYPE SMD	5	EC712~715, 908
...3	FCN2R1001802	18P FFC CONNECTOR 1.0MM 90° DUAL CONTACT	1	FCN1
...3	IC74AHC1G125GW	IC 74AHC1G125G SOT353	1	IC908
...3	IC7805	IC (AN7805) JRC	1	IC901
...3	ICAIC1528N-0G	IC AIC1528N-0G SOP8	1	IC905
...3	ICBA4558F	IC (4558) SMD	1	IC201
...3	ICG696L293T1UF	IC RESET	1	IC403
...3	ICLP2985-50DBVR	IC LP2985-50DBVR SOT23-5	1	IC203
...3	ICMC34063ADR	IC MC34063ADR SOIC8 (ALTERNATIVE: AL2-61-3463)	2	IC904, 906
...3	ICPCM1808PWR	IC PCM1808PWR	1	IC202
...3	ICTC4053BFT	IC TC4053BFT TSSOP16	1	IC909
...3	ICTUSB3200	IC TUSB3200ACPAH TQFP	1	IC401
...3	ICYHFRS006	IC WITH PROGRAME	1	IC402
....4	IC24LC64TIMI	IC (64K SERIAL EEPROM) SOP 150MIL	1	
...3	JK4690-DR30-04F	USB2.0 B-TYPE 90	1	JK901
...3	JKDJ-0702B-020	DC SOCKET 2.0MM	1	JK902
...3	NUT0103INI	NUT (3M/M)- ROHS	1	(IC901)
...3	PC10S001	PCB SOUND CARD DOUBLE LAYER FR-4 280*100MM	1	
...3	RJ1039-10-0580B	RCA 2P WHITE/RED GOLD PLATED	1	JK201
...3	RJ208PKB015A0AG	RCA JACK 2P WHITE/RED GOLD 90DEG	2	JK700, 701
...3	RS000004J06	CHIP RES. 0 Ω 5% SMD 1206	4	R906, 951, ZD901, 902
...3	RS000010J03	CHIP RES. 0 Ω 5% SMD 0603	8	R409, 410, 413~416, 430, 432
...3	RS001010F03	CHIP RES. 10 Ω 1% SMD 0603	1	R431
...3	RS001K10F03	CHIP RES. 1K Ω 1% SMD 0603	7	R215, 216, 720, 721, 742~744, 903, 913
...3	RS002K10F03	CHIP RES. 2K Ω 1% SMD 0603	2	R207, 208
...3	RS003K10F03	CHIP RES. 3K Ω 1% SMD 0603	4	R745~748
...3	RS00R504F06	CHIP RES.0.5 O 1% SMD 1206	1	R916
...3	RS010010F03	CHIP RES. 100 Ω 1% SMD 0603	21	R209~212, 411, 412, 434~436, 700~703, R718, 719, 722~725, 740, 741
...3	RS010K10F03	CHIP RES. 10K Ω 1% SMD 0603	7	R205, 206, 429, 907, 924, 925, 950
...3	RS015010F03	CHIP RES. 150 Ω 1% SMD 0603	1	R437
...3	RS018010F03	CHIP RES. 180 Ω 1% SMD 0603	1	R915
...3	RS01K110F03	CHIP RES.1.1K O 5% SMD 0603	1	R904
...3	RS01K510F03	CHIP RES. 1.5K Ω 1% SMD 0603	1	R405
...3	RS022K10F03	CHIP RES. 22K Ω 1% SMD 0603	3	R203, 204, 908
...3	RS02K210F03	CHIP RES. 2.2K Ω 1% SMD 0603	3	R201, 202, 912
...3	RS03K310F03	CHIP RES. 3.3K Ω 1% SMD 0603	1	R902
...3	RS03K910F03	CHIP RES. 3.9K Ω 1% SMD 0603	1	R914
...3	RS047K10F03	CHIP RES. 47K Ω 1% SMD 0603	17	R710~717, 732~739, 909
...3	RS04R704J06	CHIP RES. 4.7 OHM,1/4W,+/-5%,1206	1	R901
...3	RS0R7504F06	CHIP RES. 0.75Ω 1% SMD 1206	1	R911
...3	RS100K08F05	CHIP RES. 100K 1% SMD 0805 -ROHS	1	R213
...3	RS10K710F03	CHIP RES. 10.7K OHM,1/10W,?%,0603	4	R708, 709, 730, 731
...3	RS27R410F03	CHIP RES. 27.4 Ω 1% SMD 0603	2	R406, 407
...3	RS3K0910F03	CHIP RES. 3.09K Ω 1% SMD 0603	1	R401
...3	RS3K2410F03	CHIP RES. 3.24K Ω 1% SMD 0603	4	R704, 705, 726, 727
...3	RS4K9910F03	CHIP RES. 4.99K Ω 1% SMD 0603	2	R427, 428
...3	RS560K10F03	CHIP RES. 560K Ω 1% SMD 0603	2	R801, 802
...3	RS5K3610F03	CHIP RES. 5.36K Ω 1% SMD 0603	4	R706, 707, 728, 729
...3	SC0308RINI	SCREW	1	(IC901)
...3	SW5MD3S12AM6QES	SLIDE SWITCH 2P3T	1	SW901
...3	TE622001001	10P CONNECTOR SOCKET	1	TE5
...3	TR2SA1037ASM	TRANSISTOR 608 SMD	1	Q801
...3	TR2SD2114KSM	TRANSISTOR NPN 2SD2114K SOT-23 (SMD)	4	Q700~703
...3	TRC4116GR	TRANSISTOR 2SC4116GR SC-70	1	Q902
...3	TRDTC114YUA	TRANSISTOR DTC114YUA	1	Q901
...3	TRK880GR	TRANSISTOR 2SK880GR SC-70	4	Q704~707
...3	UH465516-351	COIL	1	L1
...3	UHELL6SH220M	INDUCTOR22UH 0.9A SMD PANASONIC	3	L3, 4, 6
...3	UHPIC1207-221M	COIL SMD 220UH	1	L2
...3	VRR10302011	RK09K1110-K20-C0-B103 （LM1=20 10KB）	2	VR101, 102
...3	VRR50301502	VARIABLE RESISTOR ROTARY 50KA*2 15MM	1	VR201
...3	XTM06000X3	CRYSTAL 6MHZ(49US)-ROHS	1	X401
..2	**TWPC10S00201**	**PCB ASS'Y CONTROLLER**	**1**	

Lvl	Materials	SPECS	Qty	Part Location
...3	AL2-51-4401	TRANS NPN 2N4401 40V 1A SOT-23	13	Q106~118
...3	AL2-51-4403	TRANSISTOR PNP 2N4403 40V 800MA SOT-23	6	Q100~105
...3	AL2-61-7223	IC REG VOLTAGE NJU7223DL1-33 3.3V TO-252	1	IC202
...3	BALE48211-0A	LED HOLDER	6	LD17, 21, 26, 32, 100, 200
...3	CN0420001006	CONNECTOR WIRE 4P/2.0/100MM	1	CN2
...3	CN0420001504	4P CONNECTOR WIRE 150MM PITCH 2.0MM	1	CN1
...3	CN0620001008	CONNECTOR WIRE 6P/2.0/100MM	1	CN3
...3	CS104K5003X7R	CHIP CAP 0.1UF/50V,X7R,+/-10%, SMD 0603	50	C100~102, 200~203, 206~209, 211, 212, C214~221, 400~404, 500~508, 510, 511, C515~522, 528~532
...3	CS150J5003NPO	CHIP CAP.15PF ,SMD0603,+/-5 %, 50V, NPO	2	C204, 205
...3	DI1SS302SM	DIODE 1SS302 SC-70	2	D402, 403
...3	DI1SS352SM	DIODE 1SS352 HE1A	2	D400, 401
...3	DIEN1N4148WSM	DIODE FAST SWICTHING 1N4848W SOD-123	38	D200, 205~210, 212~214, 216~221, D224~226, 229, 232~234, 236, 238~240, D242~245, 247~253
...3	ECS10625CLE	E.CAP 10UF/25V LOW ESR 5*5.7MM SMD	1	EC200
...3	ECS47616D	E.CAP 47UF/16V DTYPE SMD	2	C210, 213
...3	FCN2R1001802	18P FFC CONNECTOR 1.0MM 90° DUAL CONTACT	1	FCN1
...3	IC74AHC1G125GW	IC 74AHC1G125G SOT353	2	IC203, 500
...3	IC74AHCT541PWR	OCTAL BUFFER/DRIVER W/TRI-STATE OUTS TSSOP-20 74AH	3	IC101, 102, 201
...3	IC74HCT04D	IC 74HCT04D SO14	2	IC100, 200
...3	IC74LVC14	IC LOGIC 74LVC14 SOP-14-DR99	1	IC204
...3	ICLM358M	IC LM358M DUAL OPA SOP-8	1	IC400
...3	ICTC4051BFN	IC TC4051BFN SOP16	1	IC504
...3	ICYH99S01	IC PROGRAME SNC07	1	U200
....4	ICP24HJ128GP210	IC PIC24HJ128GP210 TQFP100	1	
...3	LD1030	LED 3MM (YELLOW)	2	LD21, 26
...3	LDC191TBKT-5A	LED BLUE SMD 0603	8	LD20, 22, 23, 24, 27, 30, 31, 49
...3	LDIFR324HD	LED 3MM (RED)	4	LD17, 32, 100, 200
...3	LDKPT1608SECKKM	LED ORANGE SMD 0603 120DEG	12	LD9, 11, 13, 15, 18, 19, 28, 29, 35, 43, 45, LD47
...3	LDKPTD-1608CGCK	LED YELLOW GREEN 0603 SMD 60DEG	10	LD10, 12, 14, 16, 25, 36, 44, 46, 48, 50
...3	LDLTST-C190KRKT	LED RED (3-20-0011)	8	LD1, 3, 5, 7, 33, 37, 39, 41
...3	LDLTST-C190KSKT	LED (YELLOW) (LDKPT-1608S)	8	LD2, 4, 6, 8, 34, 38, 40, 42
...3	MT5110602	STICK KNOB	1	
...3	NM5106105	VELVET CARPET (SQUARE)	1	
...3	PC10S002	PCB CONTROLLERDOUBLE LAYER FR-4 350*120MM	1	
...3	RS000010J03	CHIP RES. 0 Ω 5% SMD 0603	11	R216, 233, 235, 236, 241~245, 400, 509
...3	RS001K10F03	CHIP RES. 1K Ω 1% SMD 0603	20	R100, 113, 127, 143, 159, 172, 185~197, R226
...3	RS001M10F03	CHIP RES. 1M OHM,1/8W,+/-1%,0603	5	R225, 405~408
...3	RS010010F03	CHIP RES. 100 Ω 1% SMD 0603	2	R401, 402
...3	RS010K10F03	CHIP RES. 10K Ω 1% SMD 0603	14	R220, 221, 224, 227, 231, 232, 234, 238, R239, 240, 250~253
...3	RS015010F03	CHIP RES. 150 Ω 1% SMD 0603	10	R115, 117, 119, 121, 129, 161, 175, 177, R179, 181
...3	RS018010F03	CHIP RES. 180 Ω 1% SMD 0603	26	R101~104, 109~112, 114, 116, 118, 120, R128, 144, 145, 160, 162~167, 174, 176, R178, 180
...3	RS01K510F03	CHIP RES. 1.5K Ω 1% SMD 0603	2	R403, 404
...3	RS022010F03	CHIP RES. 220 Ω 1% SMD 0603	12	R132~135, 138, 139, 147~150, 153, 154
...3	RS033010F03	CHIP RES. 330 Ω 1% SMD 0603	3	R126, 131, 146
...3	RS04K710F03	CHIP RES. 4.7K Ω 1% SMD 0603	4	R246~249
...3	RS068010F03	CHIP RES. 680 Ω 1% SMD 0603	1	R230
...3	SWEVQ11L05R	TACT SWITCH(5MM) ROUND TERMINAL	10	SW206, 211, 215, 220, 225, 230, 234, SW239, 244, 245
...3	SWLBC22M-12K	2 STEP ON/ OFF SWITCH STICK 12MM	2	SW201, 202
...3	SWRKJXK122400Y	SWITCH RKJXK122400Y	1	SW200
...3	SWSKHHDHA010	SWITCH SKHHDHA010 H=17MM/0.98N_TYPE	4	SW203, 208, 237, 242
...3	SWSKPMAME010	ON / OFF TACT SWITCH 5MM 1.57N 90DEG	18	SW204, 207, 209, 212, 213, 217, 218, SW222, 223, 227, 228, 232, 233, 236, SW238, 241, 243, 246
...3	TE10200502	5P CONNECTOR SOCKET 180°	1	TE6

Lvl	Materials	SPECS	Qty	Part Location
...3	TE352001001	5P*2 CONNECTOR 2.0MM DIP	2	TE1, 2
...3	TE622000201	2P CONNECTOR SOCKET	2	TE9, 10
...3	TE622000401	CONNECTOR (4P 90 DEGREE)	4	TE3, 4, 7, 8
...3	TR2SC2412KSM	TRANSISTOR 536 SMD	4	Q201~204
...3	VRR10301512	V.RESISTOR ROTARY 10K 1B SHAFT L:15MM CENTER CLICK	8	VR504~507, 516~519
...3	VRR10301513	V.RESISTOR ROTARY:10K 1B SHAFT L:15MM SINGLE CLICK	12	VR500~503, 512~515, 520~523
...3	VRS10304522	ROTARY VR 10K2B 45MM 20MM CENTER CLICK	2	VR508, 509
...3	XTM10000X6	CRYSTAL 10MHZ - 49US SMD	1	X200
..2	**TWPC10S00301**	**PCB ASS'Y MULTI**	**1**	
...3	PC10S003	PCB MULTI DOUBLE LAYER FR4 247*247MM	1	
...3	**TWPC10S003A01**	**PCB ASS'Y FRONT PANEL**	**1**	
....4	CS102K5003X7R	CHIP CAP 1000PF/50V,X7R,+/-10%, SMD 0603	2	C300, 301
....4	CS104K5003X7R	CHIP CAP 0.1UF/50V,X7R,+/-10%, SMD 0603	6	C304~309
....4	ECS10625B	E.CAPACITOR 10UF/25V SMD-B	2	EC300, 301
....4	ECS47625D	E.CAP 47UF/25V D TYPE SMD	2	EC302, 303
....4	ICNJM4556AM	IC (NJM4556AM)	1	IC301
....4	JKHTJ-064-12D	JACK HTJ-064-12D	1	JK300
....4	MT5104410	FIXED METAL	1	(JK300)
....4	RS001K10F03	CHIP RES. 1K Ω 1% SMD 0603	2	R312, 313
....4	RS006810F03	CHIP RES. 68 Ω 1% SMD 0603	4	R308~311
....4	RS010K10F03	CHIP RES. 10K Ω 1% SMD 0603	2	R300, 301
....4	RS018K10F03	CHIP RES. 18K Ω 1% SMD 0603	2	R304, 305
....4	RS047K10F03	CHIP RES. 47K Ω 1% SMD 0603	4	R302, 303, 306, 307
....4	SWSKV-22D21	ON/OFF SLIDE SWITCH 2P 2T	1	SW300
....4	TE10200602	6P CONNECTOR SOCKET 90°	1	TE6
....4	TE622001001	10P CONNECTOR SOCKET	1	TE5
....4	TR2SD2114KSM	TRANSISTOR NPN 2SD2114K SOT-23 (SMD)	2	Q300, 301
....4	VRR10302011	RK09K1110-K20-C0-B103 （LM1=20 10KB）	4	VR2~5
....4	VRR50301502	VARIABLE RESISTOR ROTARY 50KA*2 15MM	1	VR1
...3	**TWPC10S003B01**	**PCB ASS'Y LEFT SIDE**	**1**	
....4	CN0220000503	FLAT WIRE 2P/2.0/50MM	1	CN2
....4	LDC191TBKT-5A	LED BLUE SMD 0603	4	LD21, 23, 25, 27
....4	RS01K510F03	CHIP RES. 1.5K Ω 1% SMD 0603	4	R21, 23, 25, 27
....4	TE812000211	2P CONNECTOR SOCKET	1	(CN2)
...3	**TWPC10S003C01**	**PCB ASS'Y RIGHT SIDE**	**1**	
....4	CN0220000503	FLAT WIRE 2P/2.0/50MM	1	CN3
....4	LDC191TBKT-5A	LED BLUE SMD 0603	4	LD28, 30, 32, 34
....4	RS01K510F03	CHIP RES. 1.5K Ω 1% SMD 0603	4	R28, 30, 32, 34
....4	TE812000211	2P CONNECTOR SOCKET	1	(CN2)
...3	**TWPC10S003D01**	**PCB ASS'Y CROSS FADER**	**1**	
....4	CS104K5005X7R	CHIP CAP 0.1UF ±10% 50V 0805	1	C1
....4	TE622000401	CONNECTOR (4P 90 DEGREE)	1	TE3
....4	VRS10304516	V.RESISTOR 10K 45MM 15MM	1	FD1
...3	**TWPC10S003E01**	**PCB ASS'Y LINE FADER**	**1**	
....4	CS104K5005X7R	CHIP CAP 0.1UF ±10% 50V 0805	2	C2, 3
....4	TE622000401	CONNECTOR (4P 90 DEGREE)	1	TE4
....4	VRS10306016	V. RESISTOR 10K 2B 60MM 15MM SINGLE	2	FD2, 3
...3	**TWPC10S003F01**	**PCB ASS'Y SENSOR**	**2**	
....4	CN0420000703	4P CONNECTOR WIRE 70MM	1	CN4
....4	DIHEDS-9700F50	SMALL OPTICAL ENCODER MODULES DR40	1	ENC1
...3	**TWPC10S003G01**	**PCB ASS'Y TOUCH WHEEL**	**2**	
....4	CN0420000703	4P CONNECTOR WIRE 70MM	1	CN1
....4	LDC191TBKT-5A	LED BLUE SMD 0603	2	LD18, 20
....4	LDLTST-C190KRKT	LED RED (3-20-0011)	2	LD17, 19
....4	RS015010F03	CHIP RES. 150 Ω 1% SMD 0603	4	R17~20
...3	**TWPC10S003H01**	**PCB ASS'Y LEFT SIDE SWITCH**	**1**	
....4	DIEN1N4148WSM	DIODE FAST SWICTHING 1N4848W SOD-123	4	D1~4
....4	LDC191TBKT-5A	LED BLUE SMD 0603	4	LD1, 3, 5, 7
....4	LDKPTD-1608CGCK	LED YELLOW GREEN 0603 SMD 60DEG	4	LD2, 4, 6, 8
....4	RS015010F03	CHIP RES. 150 Ω 1% SMD 0603	4	R2, 4, 6, 8
....4	RS018010F03	CHIP RES. 180 Ω 1% SMD 0603	4	R1, 3, 5, 7
....4	SWSKPMAME010	ON / OFF TACT SWITCH 5MM 1.57N 90DEG	4	SW1~4
....4	TE352001001	5P*2 CONNECTOR 2.0MM DIP	1	TE1
...3	**TWPC10S003I01**	**PCB ASS'Y RIGHT SIDE SWITCH**	**1**	

Lvl	Materials	SPECS	Qty	Part Location
....4	DIEN1N4148WSM	DIODE FAST SWICTHING 1N4848W SOD-123	4	D5~8
....4	LDC191TBKT-5A	LED BLUE SMD 0603	4	LD9, 11, 13, 15
....4	LDKPTD-1608CGCK	LED YELLOW GREEN 0603 SMD 60DEG	4	LD10, 12, 14, 16
....4	RS015010F03	CHIP RES. 150 Ω 1% SMD 0603	4	R10, 12, 14, 16
....4	RS018010F03	CHIP RES. 180 Ω 1% SMD 0603	4	R9, 11, 13, 15
....4	SWSKPMAME010	ON / OFF TACT SWITCH 5MM 1.57N 90DEG	4	SW5~8
....4	TE352001001	5P*2 CONNECTOR 2.0MM DIP	1	TE2
..2	UHA5FS233X3X12	CORE 45 O 100MHZ 23.3*3*12MM	1	
..2	WR112615032G6	WIRE 10P/2.0/150MM	1	
..2	WS117010505P	WASHER (TEFLON)	2	
..2	WS663309IC	SPRING WASHER 3M/M	6	

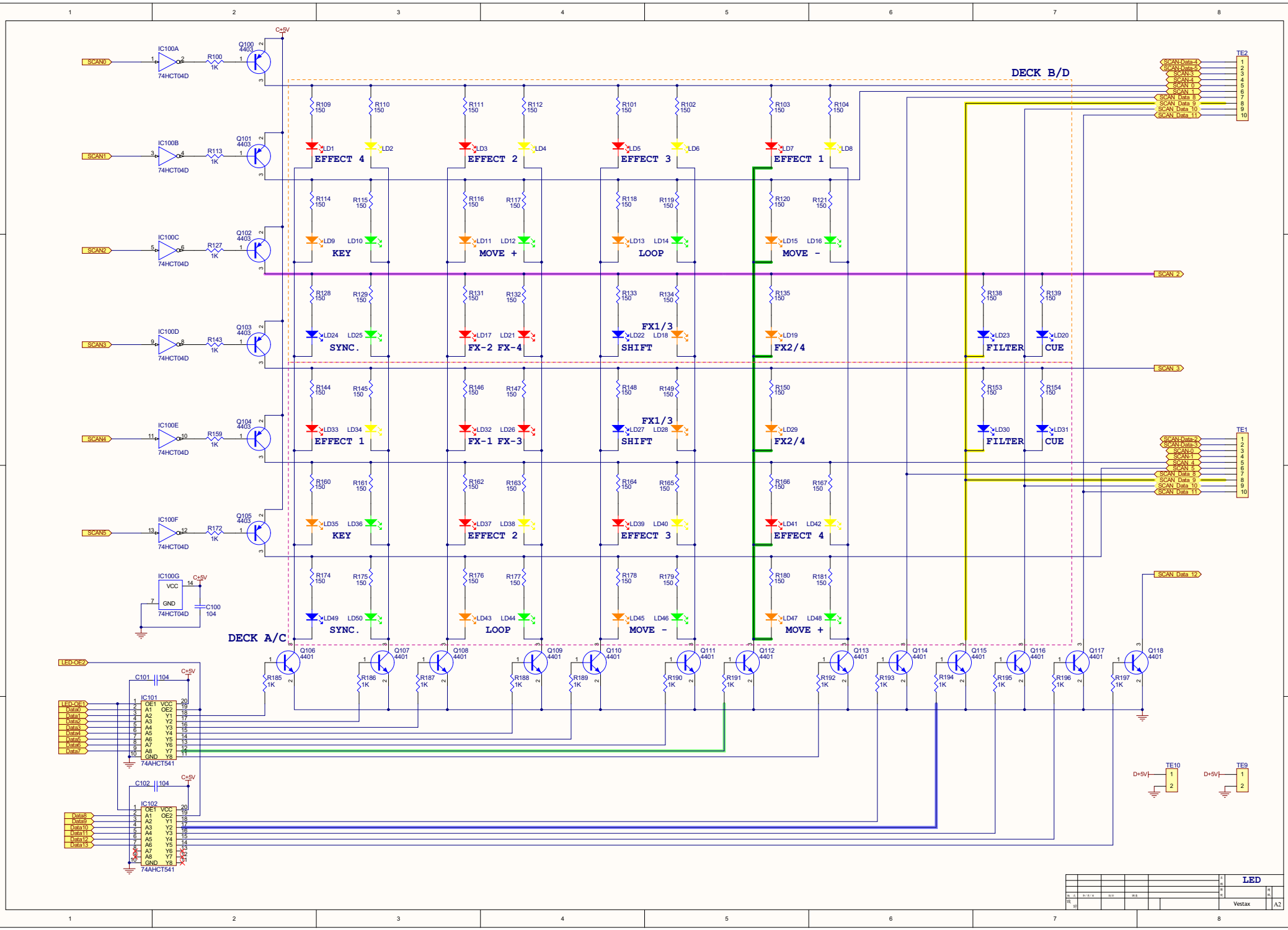
DECK B/D
DECK A/C
EFFECT 4
EFFECT 2
EFFECT 3
EFFECT 1
KEY
MOVE +
LOOP
MOVE -
SYNC.
FX-2 FX-4
FX1/3
SHIFT
FX2/4
FILTER
CUE
FX-1 FX-3
SCAN0
SCAN1
SCAN2
SCAN3
SCAN4
SCAN5
IC100A
IC100B
IC100C
IC100D
IC100E
IC100F
IC100G
74HCT04D
C+5V
LED-OE2
IC101
IC102
74AHCT541
TE1
TE2
TE9
TE10
D+5V
LED
Vestax
A2

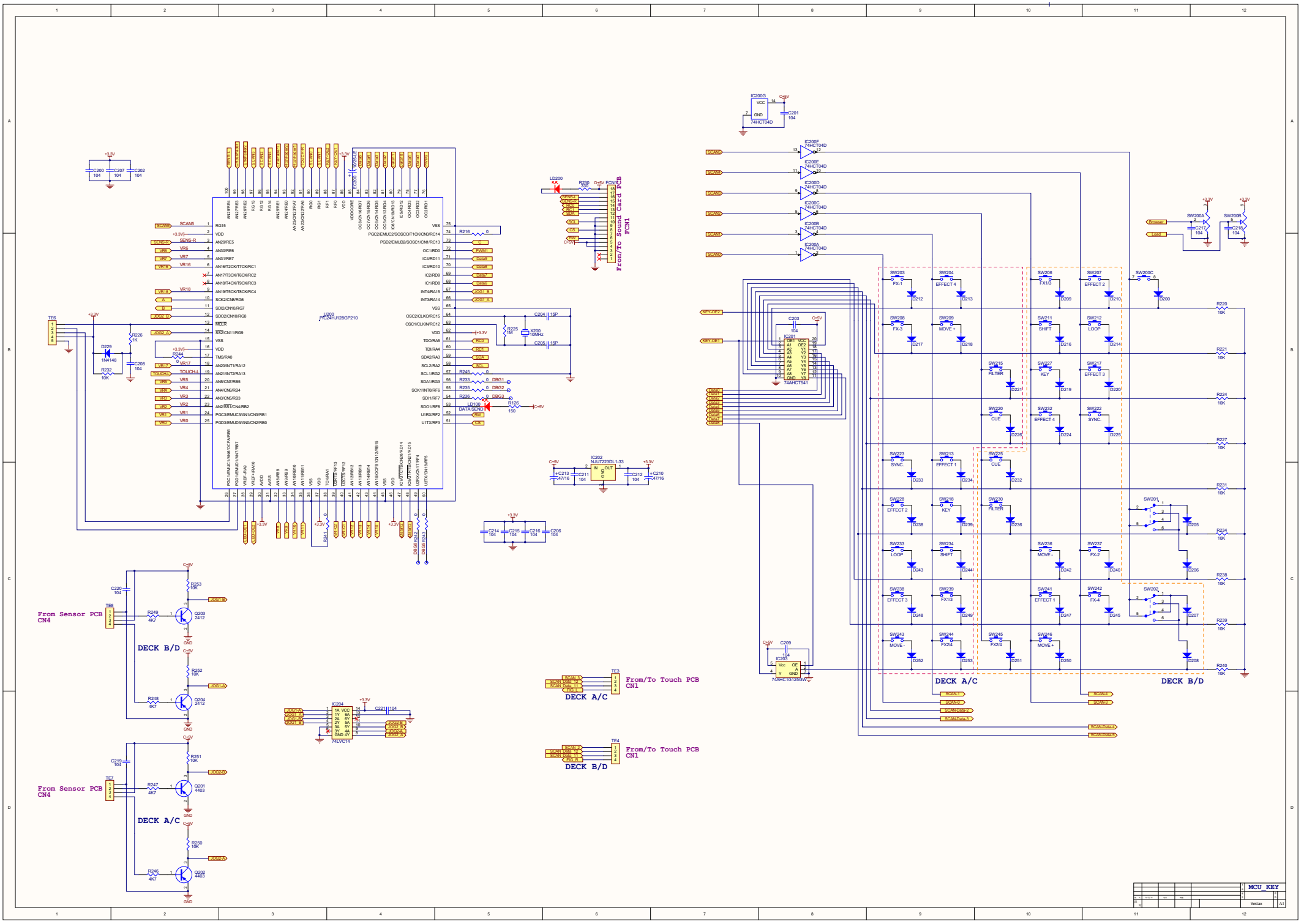
MCU KEY
Vestax
A1
From/To Sound Card PCB
FCN1
From Sensor PCB
CN4
DECK B/D
DECK A/C
From/To Touch PCB
CN1
IC200
PIC24HJ128GP210
74HCT04D
74AHCT541
74AHCT1G125GW
74LVC14
NJU7223DL1-33
X200
10MHz
LD200
LD202
DATA SEND
TE6
TE8
TE7
TE3
TE4
IC200G
IC200F
IC200E
IC200D
IC200C
IC200B
IC200A
IC201
IC202
IC203
IC204
SW200A
SW200B
SW200C
SW201
SW202
Bowser
Load
KEY-OE2
KEY-OE1
SCAN-1
SCAN-2
SCAN-3
SCAN-4
SCAN-Data-1
SCAN-Data-2
SCAN-Data-3
SCAN-Data-4
SCAN-Data-5
SW203 FX-1
SW204 EFFECT 4
SW206 FX1/3
SW207 EFFECT 2
SW208 FX-3
SW209 MOVE +
SW211 SHIFT
SW212 LOOP
SW215 FILTER
SW227 KEY
SW217 EFFECT 3
SW220 CUE
SW232 EFFECT 4
SW222 SYNC.
SW223 SYNC.
SW213 EFFECT 1
SW225 CUE
SW228 EFFECT 2
SW218 KEY
SW230 FILTER
SW233 LOOP
SW234 SHIFT
SW236 MOVE -
SW237 FX-2
SW238 EFFECT 3
SW239 FX1/3
SW241 EFFECT 1
SW242 FX-4
SW243 MOVE -
SW244 FX2/4
SW245 FX2/4
SW246 MOVE +

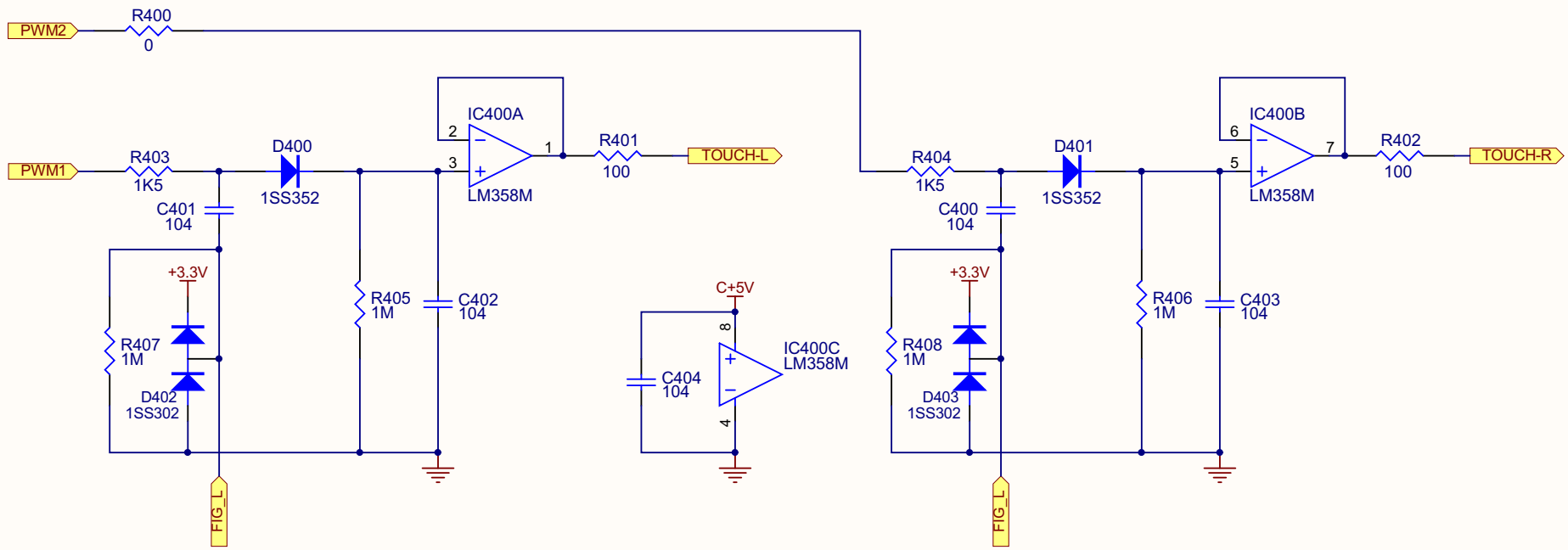

版 次	年/月/日	設計	調查		名稱	TOUCH
設計					圖號	用紙
					Vestax	A4

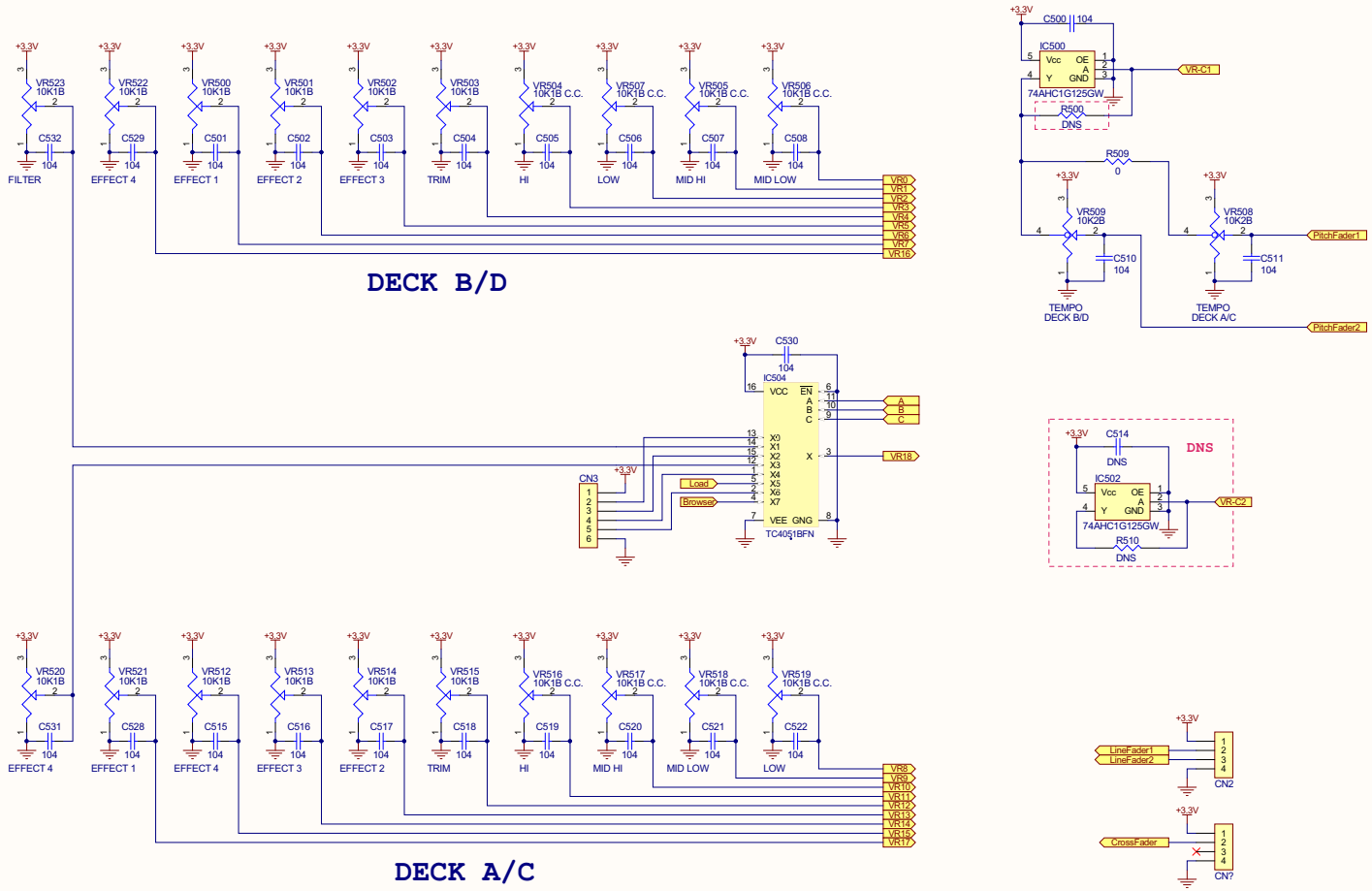

						工程	VR
标记	处数	更改文件号	签名	年月日		阶段标记	
设计		审核		批准		Vestax	A2

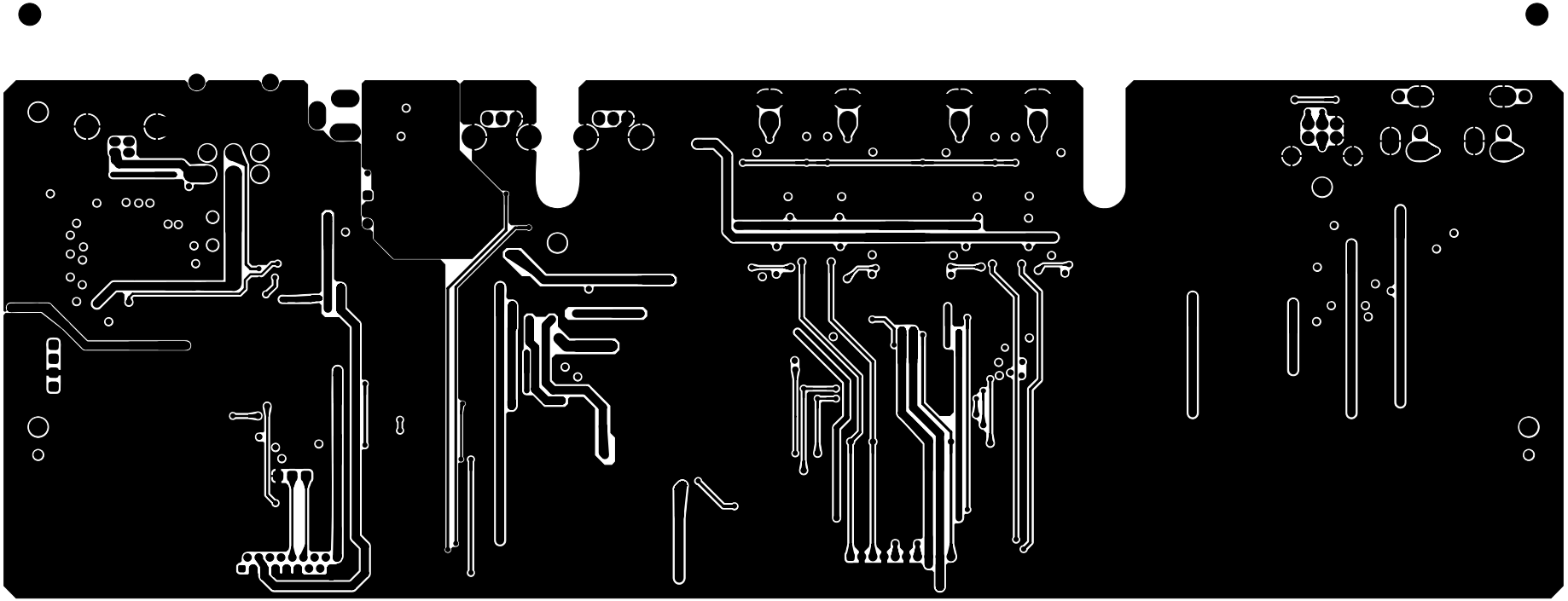

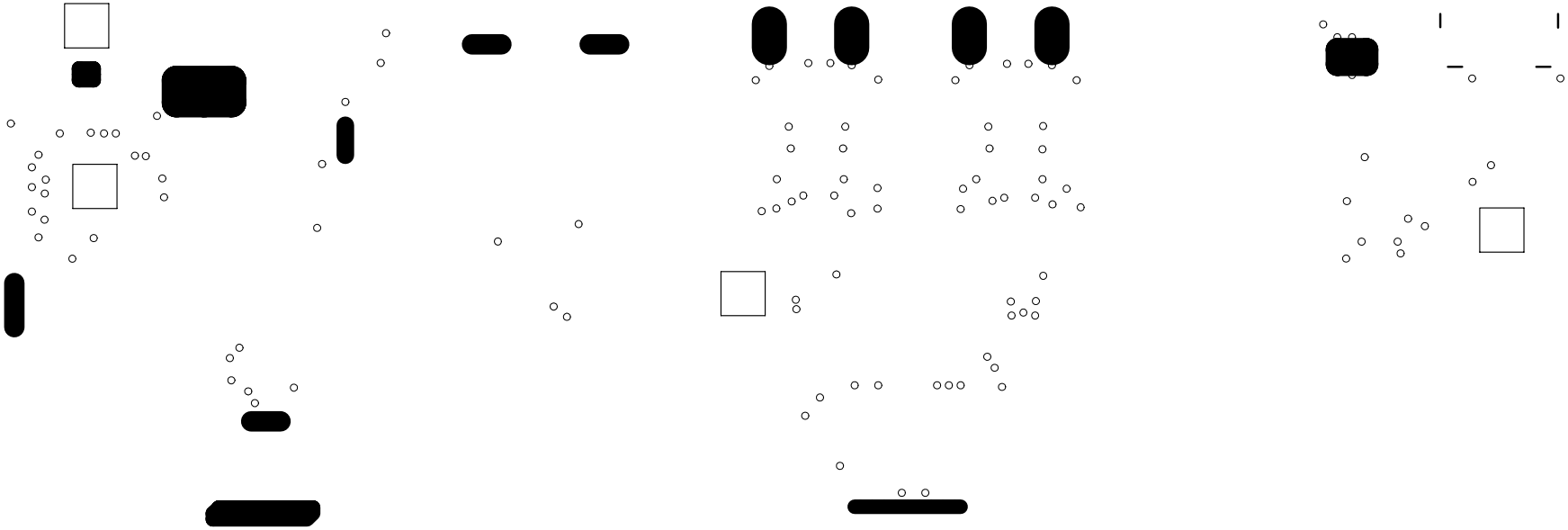

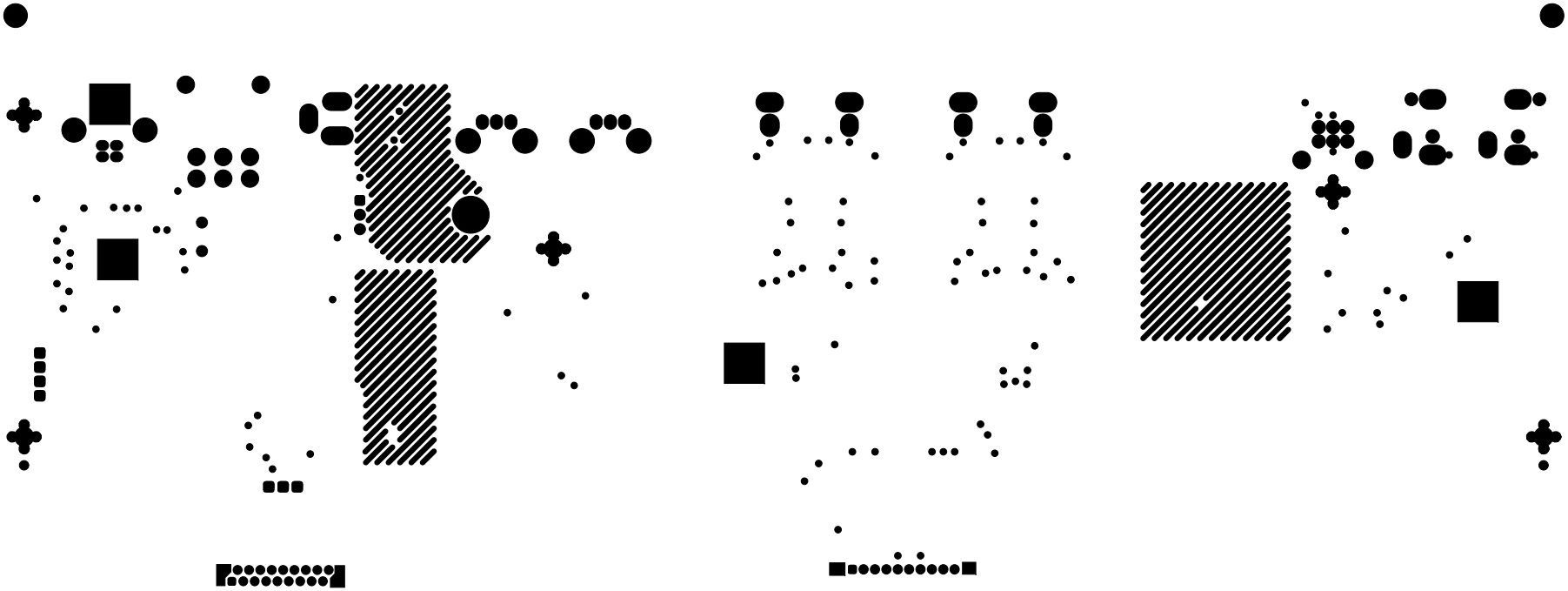

Symbol	Hit Count	Tool Size	Physical Length	Rout Path Length	Plated	Hole Type
U	970	0.4mm (15.748mil)			PTH	Round
G	18	0.7mm (27.559mil)			PTH	Round
D	2	0.75mm (29.528mil)			PTH	Round
C	14	0.8mm (31.496mil)			PTH	Round
F	22	1mm (39.37mil)			PTH	Round
N	4	1.45mm (57.087mil)			PTH	Round
A	14	1.5mm (59.055mil)			PTH	Round
R	2	1.5mm (59.055mil)			NPTH	Round
H	2	2.1mm (82.677mil)			PTH	Round
P	2	2.1mm (82.677mil)			NPTH	Round
O	2	2.2mm (86.614mil)			NPTH	Round
T	4	2.2mm (86.614mil)			PTH	Round
E	1	3.175mm (125mil)			PTH	Round
B	5	3.2mm (125.984mil)			NPTH	Round
S	4	4mm (157.48mil)			NPTH	Round
I	4	1mm (39.37mil)	2.1mm (82.677mil)	1.1mm (43.307mil)	PTH	Slot
Q	2	1mm (39.37mil)	2.5mm (98.425mil)	1.5mm (59.055mil)	PTH	Slot
L	2	1mm (39.37mil)	3mm (118.11mil)	2mm (78.74mil)	PTH	Slot
M	1	1mm (39.37mil)	3.5mm (137.795mil)	2.5mm (98.425mil)	PTH	Slot
K	5	1.3mm (51.181mil)	2.5mm (98.425mil)	1.2mm (47.244mil)	PTH	Slot
J	3	1.3mm (51.181mil)	2.6mm (102.362mil)	1.3mm (51.181mil)	PTH	Slot
	1083 Total					

Slot definitions : **Rout Path Length** = Calculated from tool start centre position to tool end centre position.
Physical Length = Rout Path Length + Tool Size = Slot length as defined in the PCB layout

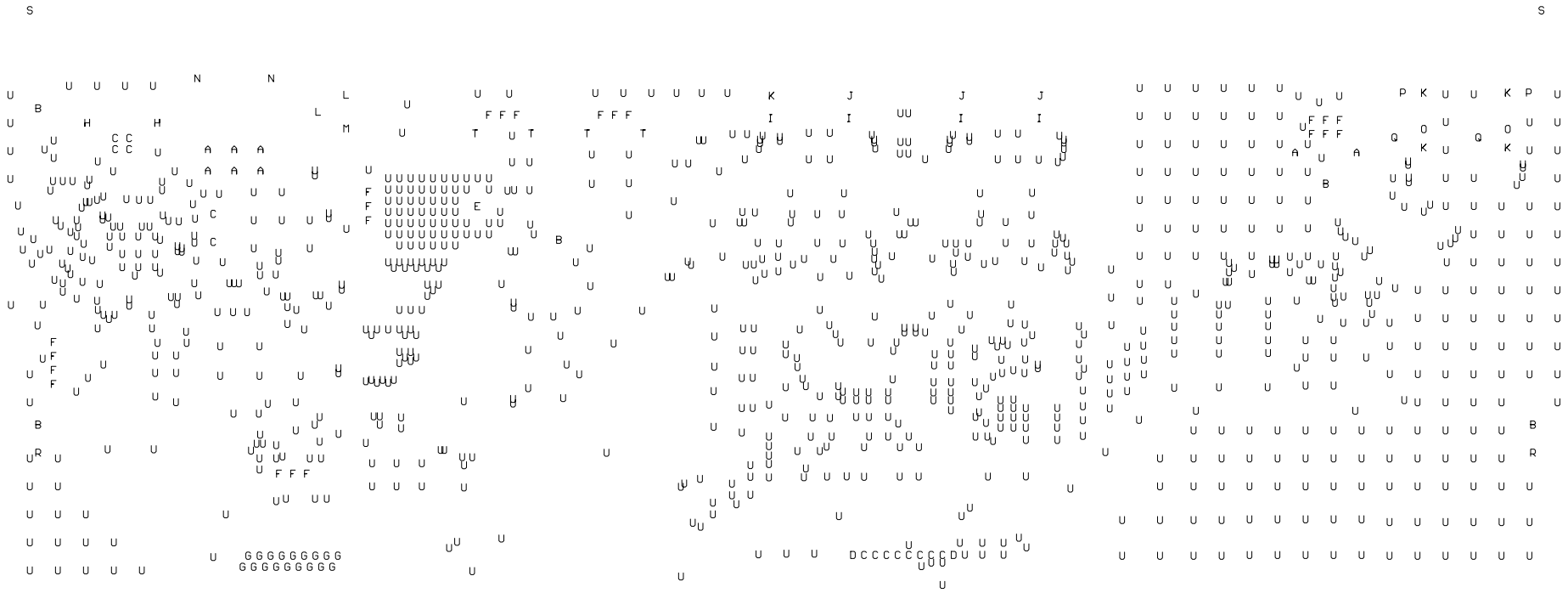

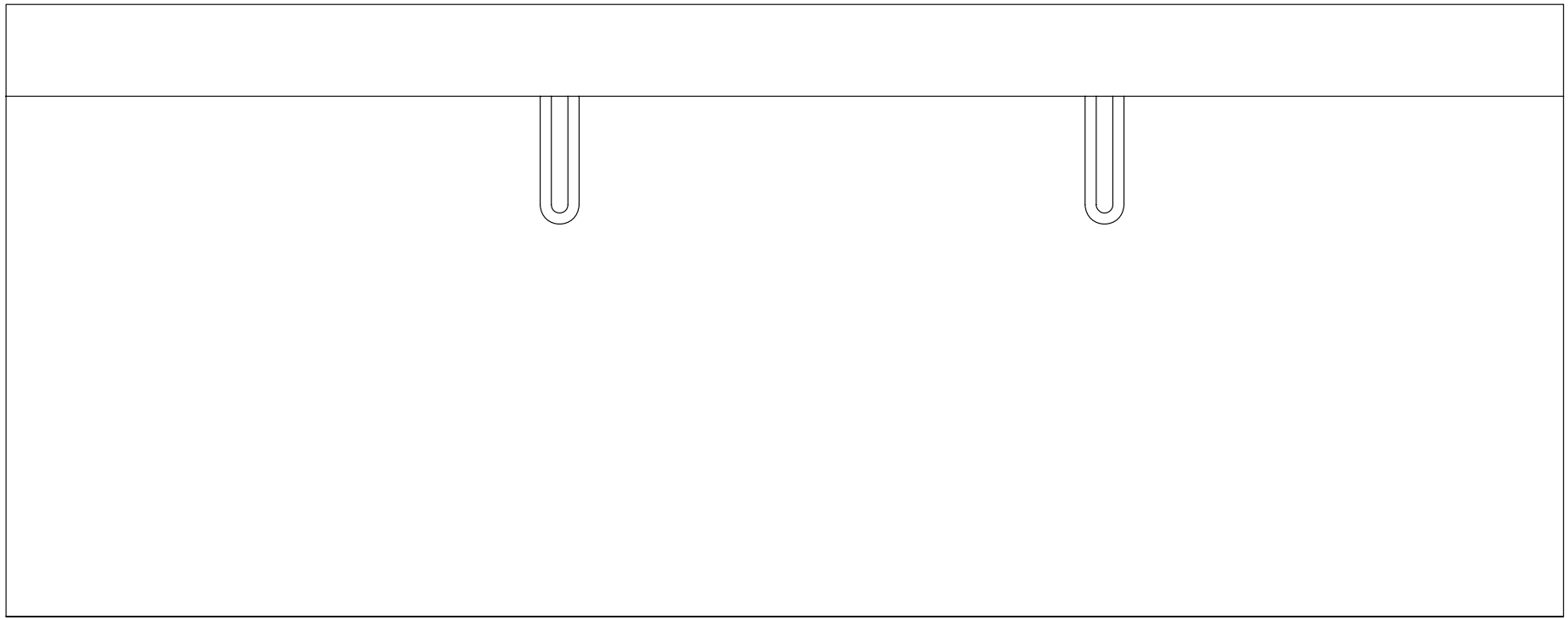

PC10S001

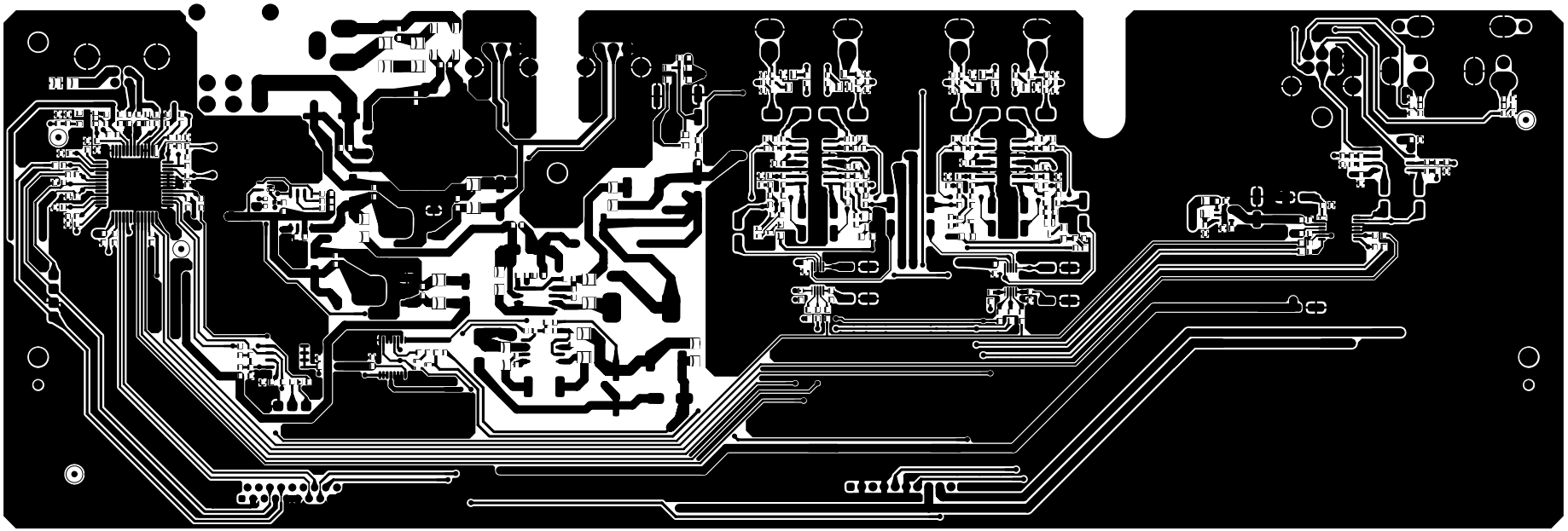

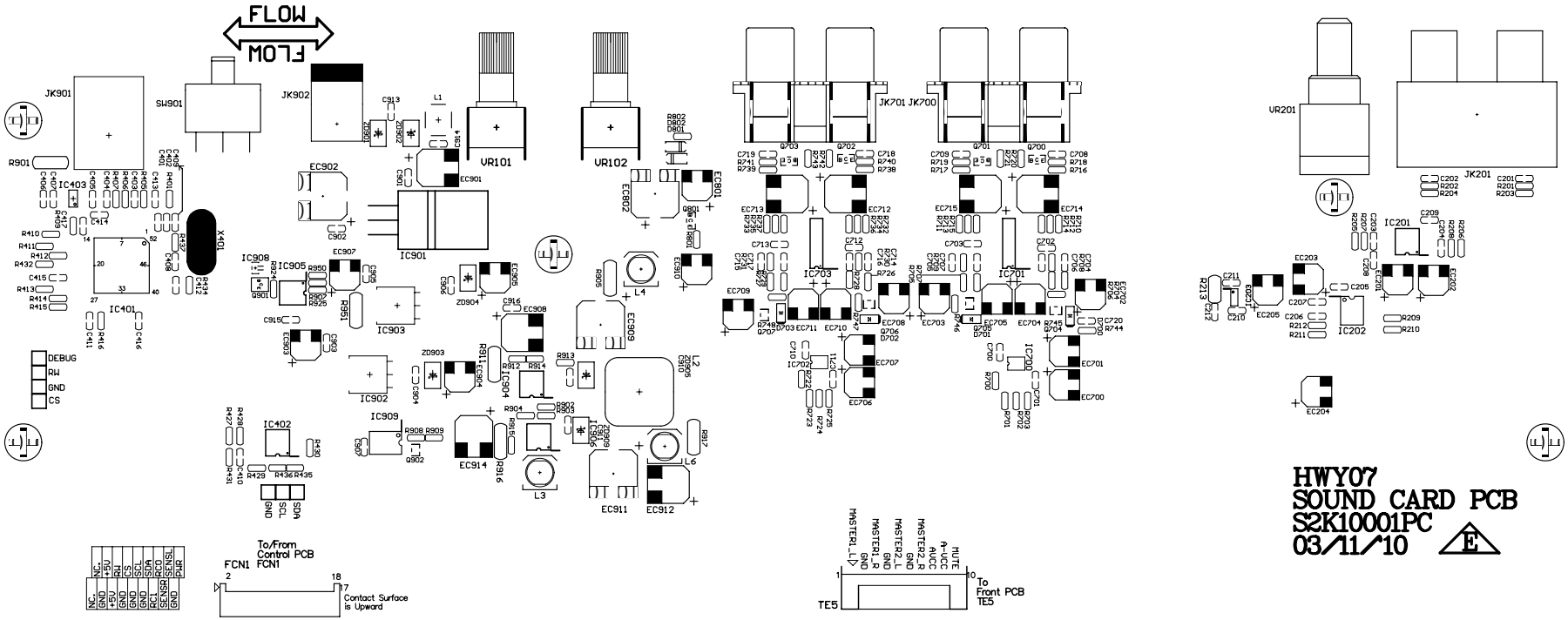

HWY07
SOUND CARD PCB
S2K10001PC
03/11/10

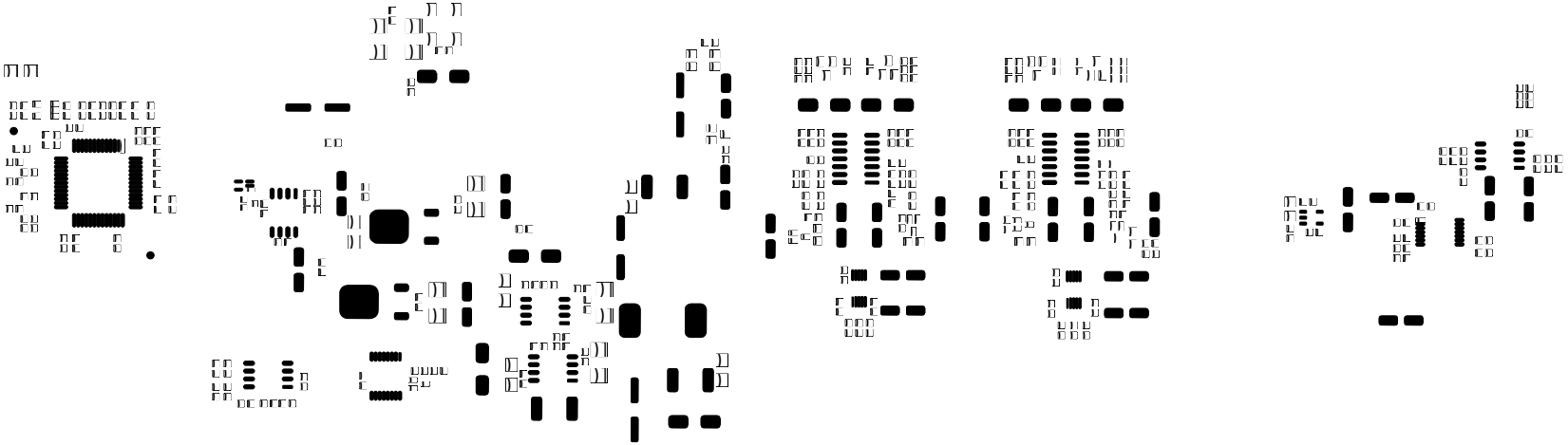

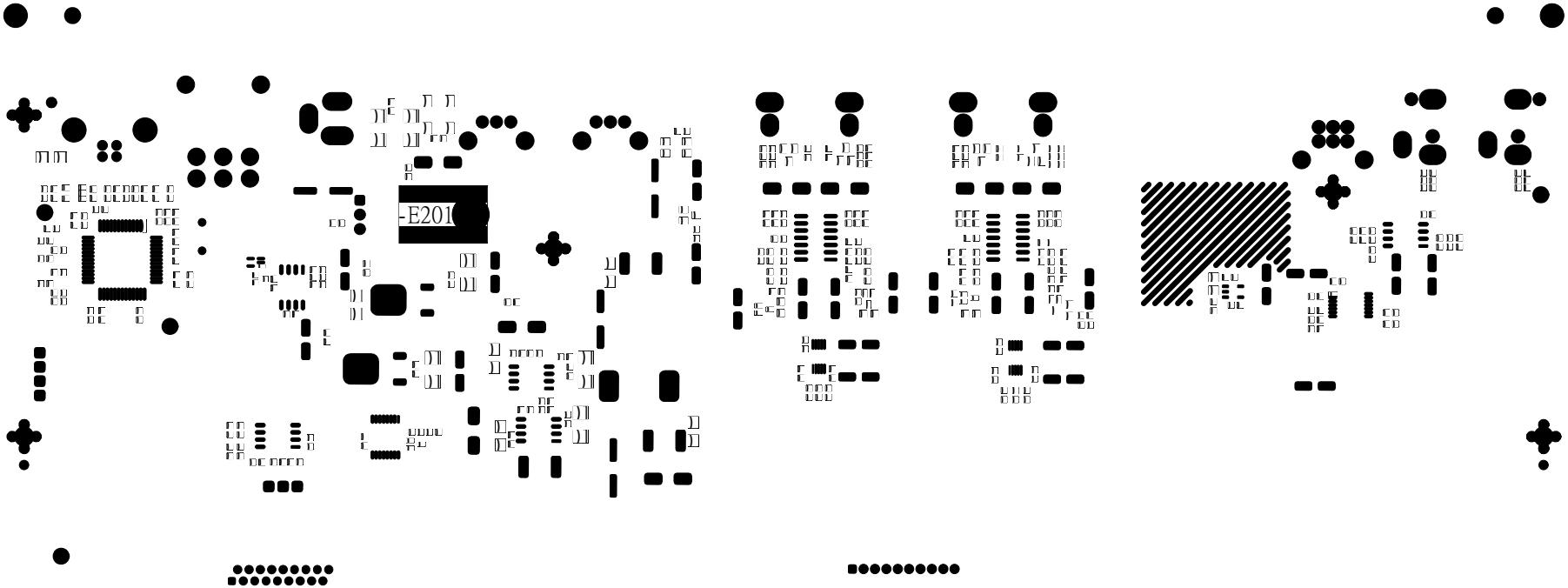

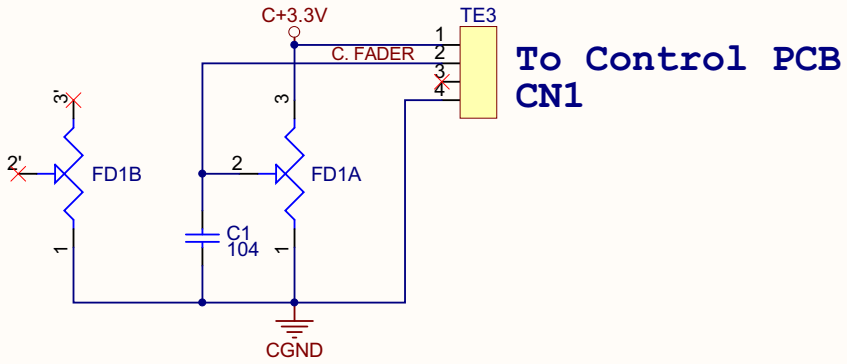

Title	SNC07 Cross Fader SCH	
Size A4	Number	Revision 0
Date: 2010/9/27	Sheet of	
File: D:\SinoLink\..\SNC07 Cross Fader 20100521.SchDoc	Drawn By:	

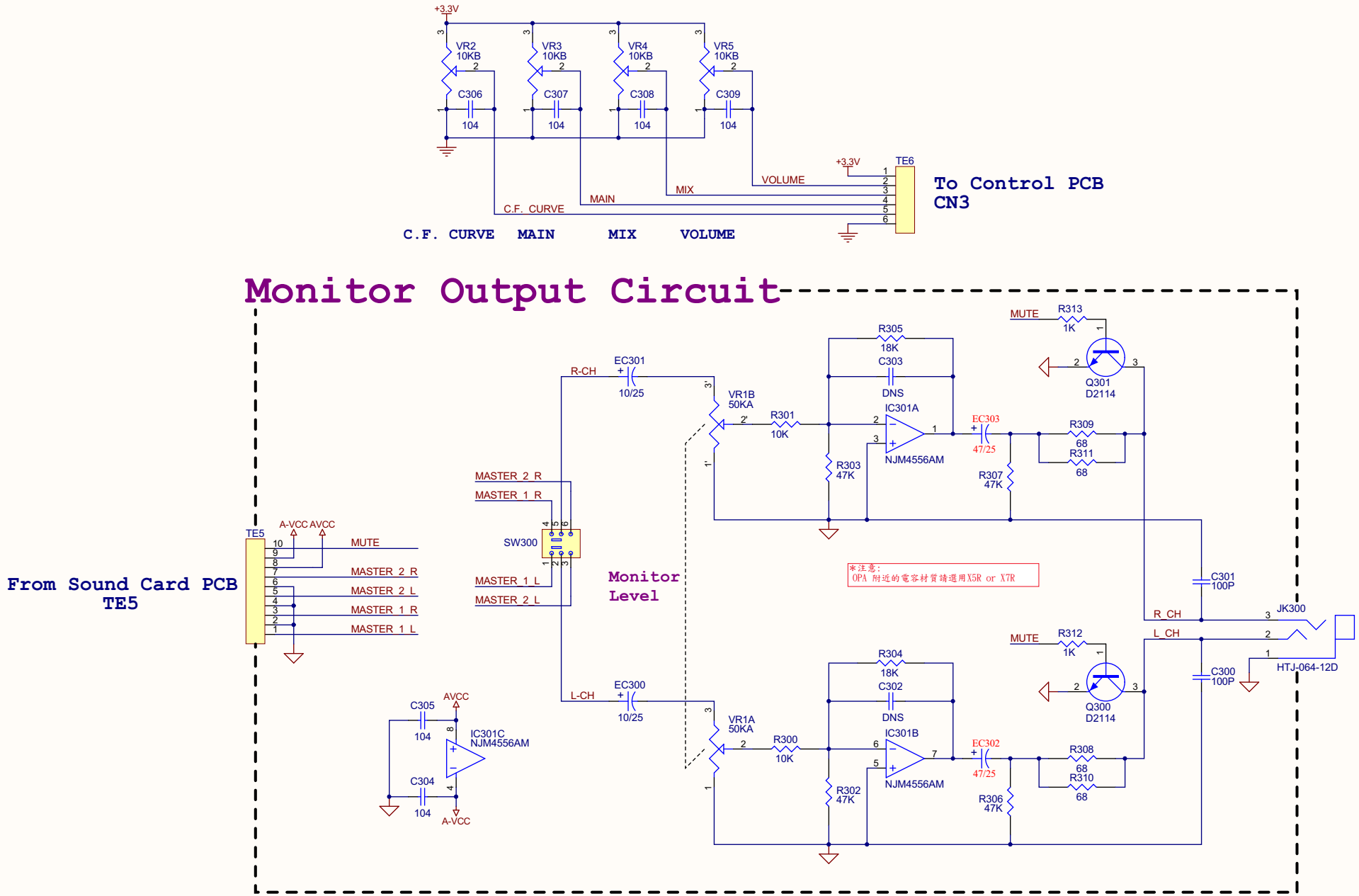
+3.3V
VR2 10KB
VR3 10KB
VR4 10KB
VR5 10KB
C306 104
C307 104
C308 104
C309 104
TE6
VOLUME
MIX
MAIN
C.F. CURVE
To Control PCB CN3
C.F. CURVE MAIN MIX VOLUME
Monitor Output Circuit
From Sound Card PCB TE5
TE5
A-VCC AVCC
MUTE
MASTER_2_R
MASTER_2_L
MASTER_1_R
MASTER_1_L
SW300
Monitor Level
R-CH
L-CH
EC301 10/25
EC300 10/25
VR1B 50KA
VR1A 50KA
R301 10K
R300 10K
R305 18K
R304 18K
C303 DNS
C302 DNS
IC301A NJM4556AM
IC301B NJM4556AM
R303 47K
R302 47K
EC303 47/25
EC302 47/25
R307 47K
R306 47K
R309 68
R311 68
R308 68
R310 68
R313 1K
R312 1K
Q301 D2114
Q300 D2114
C301 100P
C300 100P
JK300
HTJ-064-12D
IC301C NJM4556AM
C305 104
C304 104
AVCC
A-VCC
*注意:
OPA 附近的電容材質請選用X5R or X7R
Front
Vestax
A3

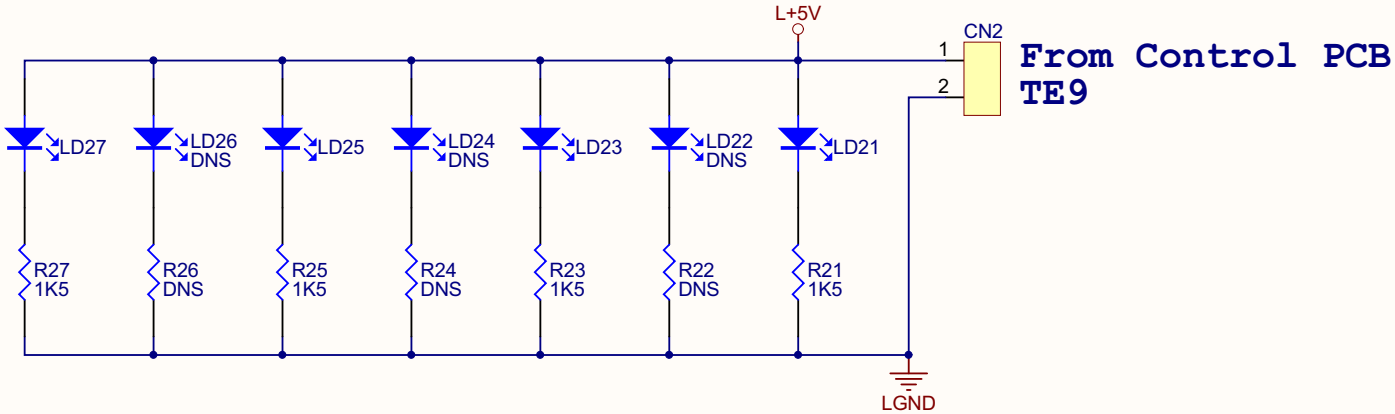

Title	SNC07 Left Side LED SCH	
Size A4	Number	Revision 0
Date: 2010/9/27	Sheet of	
File: D:\SinoLink\..\SNC07 Left Side-A20100831.SchDoc	Drawn By:	

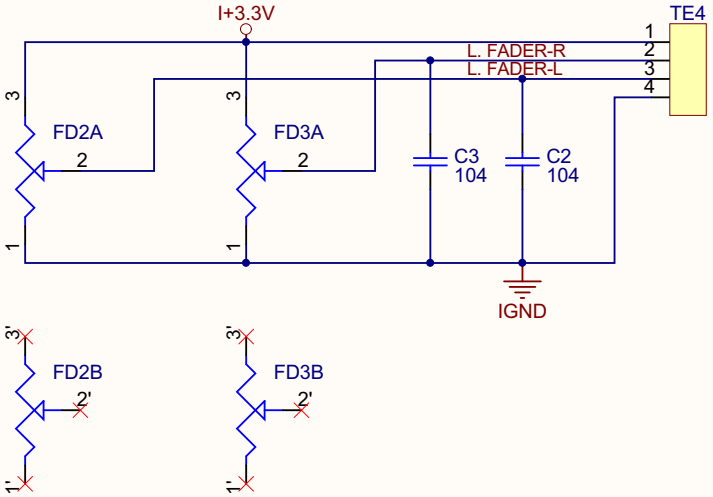

To Control PCB
CN2

Title	SNC07 Line Fader SCH	
Size A4	Number	Revision 0
Date: 2010/9/27	Sheet of	
File: D:\SinoLink\..\SNC07 Line Fader 20101021.SchDoc	Drawn By:	

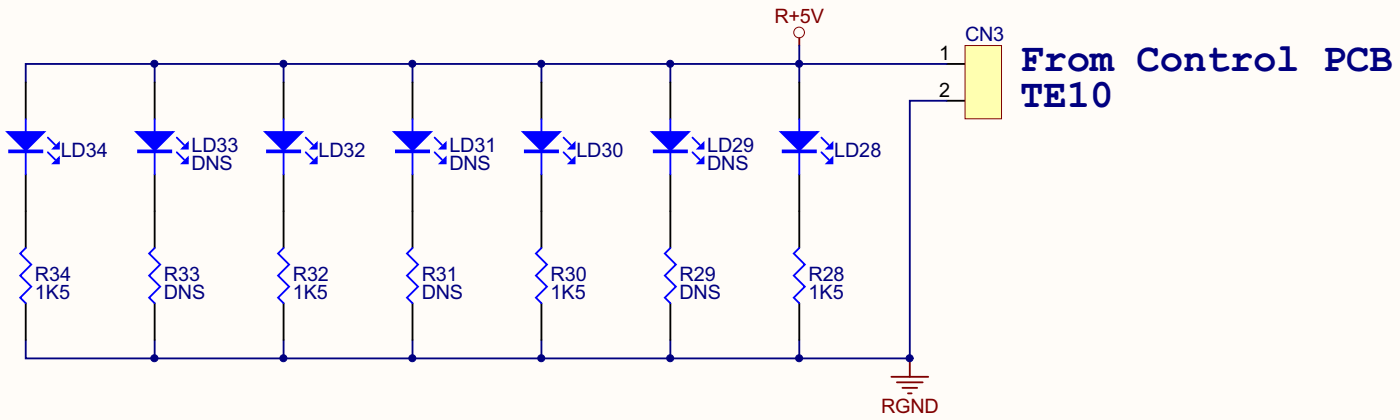

Title	SNC07 Right Side LED SCH	
Size A4	Number	Revision 0
Date: 2010/9/27	Sheet of	
File: D:\SinoLink\..\SNC07 Right Side LED 20100831.SchDoc	Drawn By:	

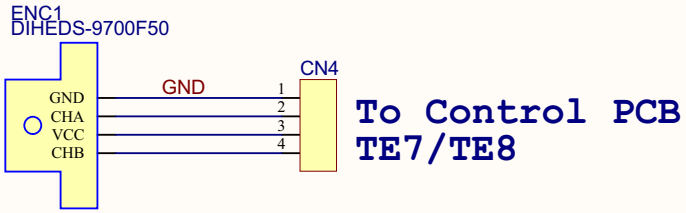

					名稱		
					圖號		用紙
版 次	年/月/日	設計	調查				
設計					Vestax		A4

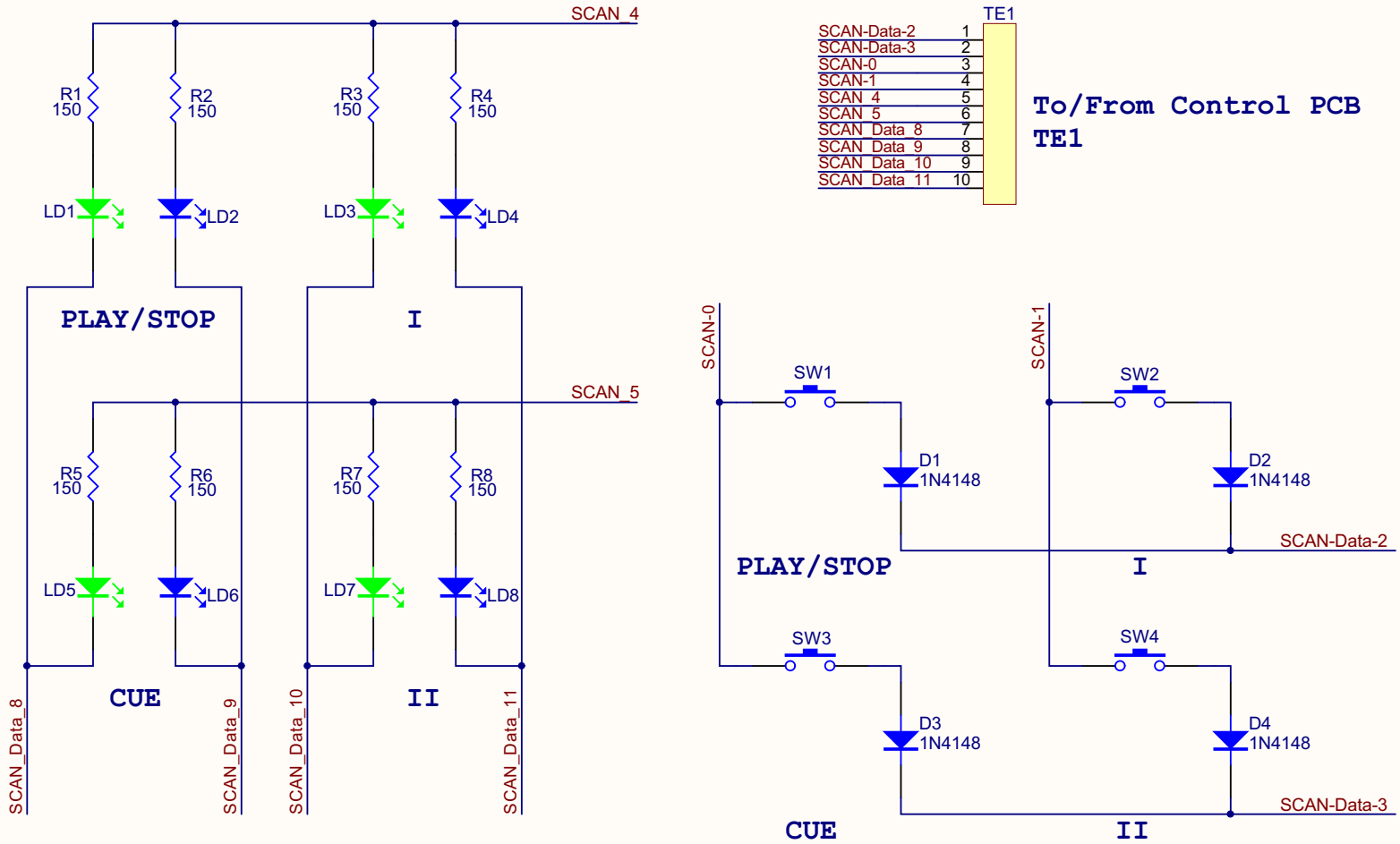

Left Switch

Title	SNC07 Left Switch SCH	
Size A4	Number	Revision 0
Date: 2010/9/27	Sheet of	
File: D:\SinoLink\..\SNC07 Switch_L-A20100730B.SchDoc		

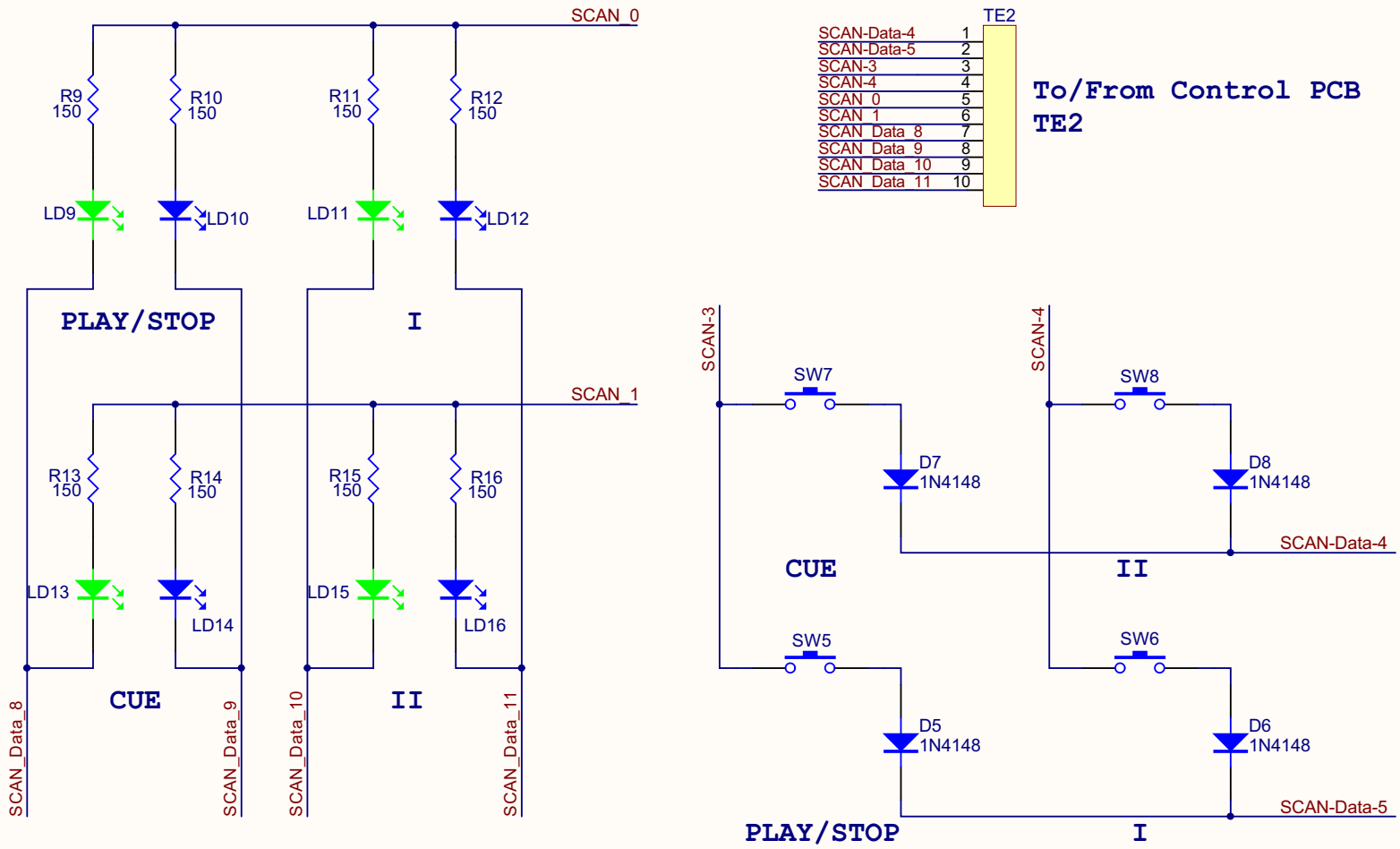

Right Switch

Title	SNC07 Right Switch SCH	
Size A4	Number	Revision 0
Date: 2010/9/27	Sheet of	
File: D:\SinoLink\..\SNC07 Switch_R-020100628B.SchDoc		

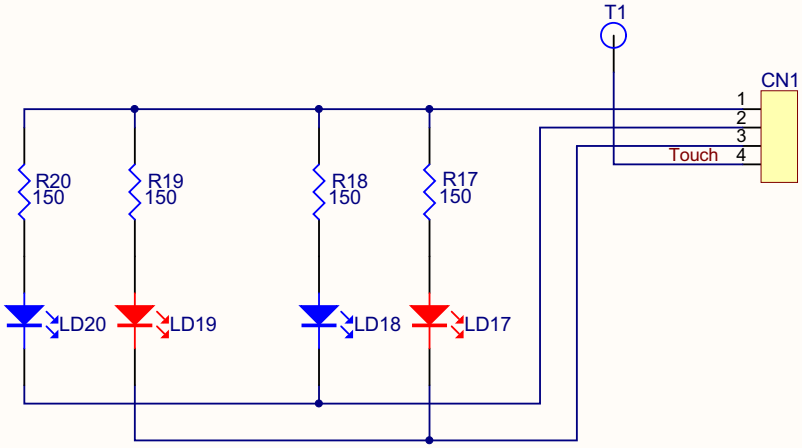

From Control PCB
TE3/TE4

Title	SNC07 Touch Wheel SCH	
Size A4	Number	Revision 0
Date: 2010/9/27	Sheet of	
File: D:\SinoLink\..\SNC07 Touch -020100929.SchDoc	Drawn By:	

Bottom Layer

Bottom Overlay Layer

Bottom Solder Layer

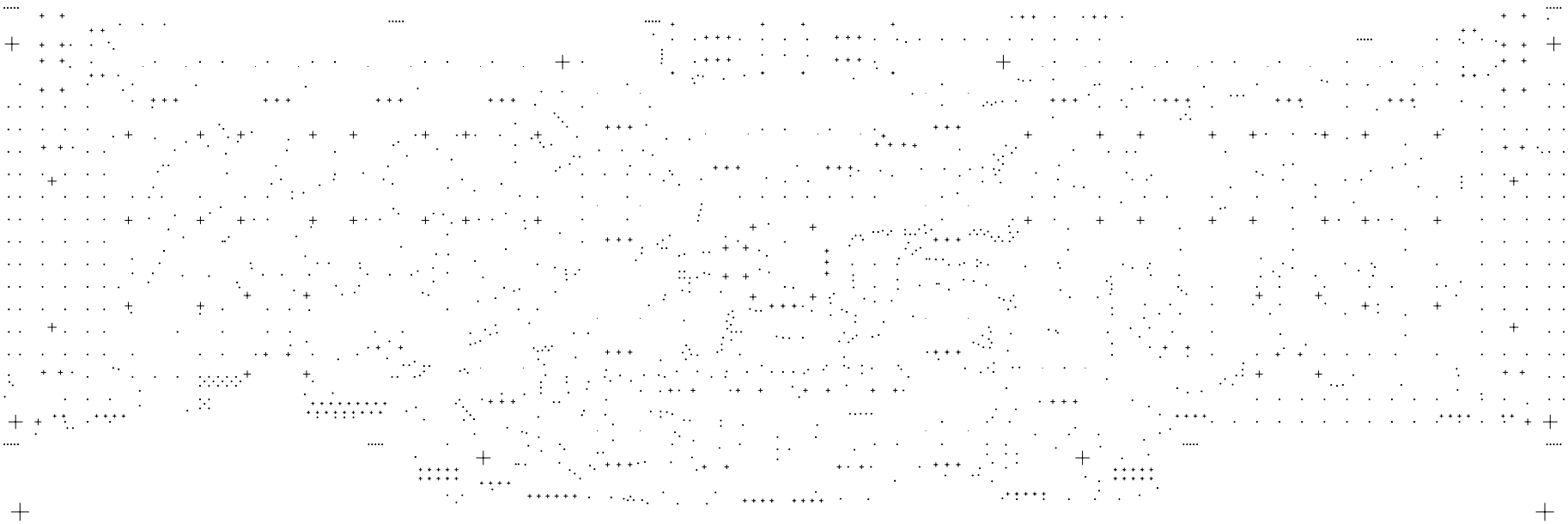

Symbol	Hit Count	Tool Size	Physical Length	Rout Path Length	Plated	Hole Type
M	40	0.1mm (3.937mil)			NPTH	Round
Q	45	0.4mm (15.748mil)			NPTH	Round
S	1169	0.4mm (15.748mil)			PTH	Round
G	18	0.7mm (27.559mil)			PTH	Round
B	16	0.75mm (29.528mil)			PTH	Round
A	41	0.8mm (31.496mil)			PTH	Round
E	26	0.9mm (35.433mil)			PTH	Round
K	20	1mm (39.37mil)			NPTH	Round
D	71	1mm (39.37mil)			PTH	Round
J	24	1.1mm (43.307mil)			PTH	Round
H	4	1.4mm (55.118mil)			PTH	Round
C	2	1.5mm (59.055mil)			NPTH	Round
I	4	1.5mm (59.055mil)			PTH	Round
O	8	1.6mm (62.992mil)			NPTH	Round
P	36	1.7mm (66.929mil)			NPTH	Round
L	4	2mm (78.74mil)			PTH	Round
N	8	3.2mm (125.984mil)			NPTH	Round
R	2	4mm (157.48mil)			NPTH	Round
F	8	0.8mm (31.496mil)	2mm (78.74mil)	1.2mm (47.244mil)	PTH	Slot
	1546 Total					

Slot definitions : **Rout Path Length** = Calculated from tool start centre position to tool end centre position.
Physical Length = Rout Path Length + Tool Size = Slot length as defined in the PCB layout

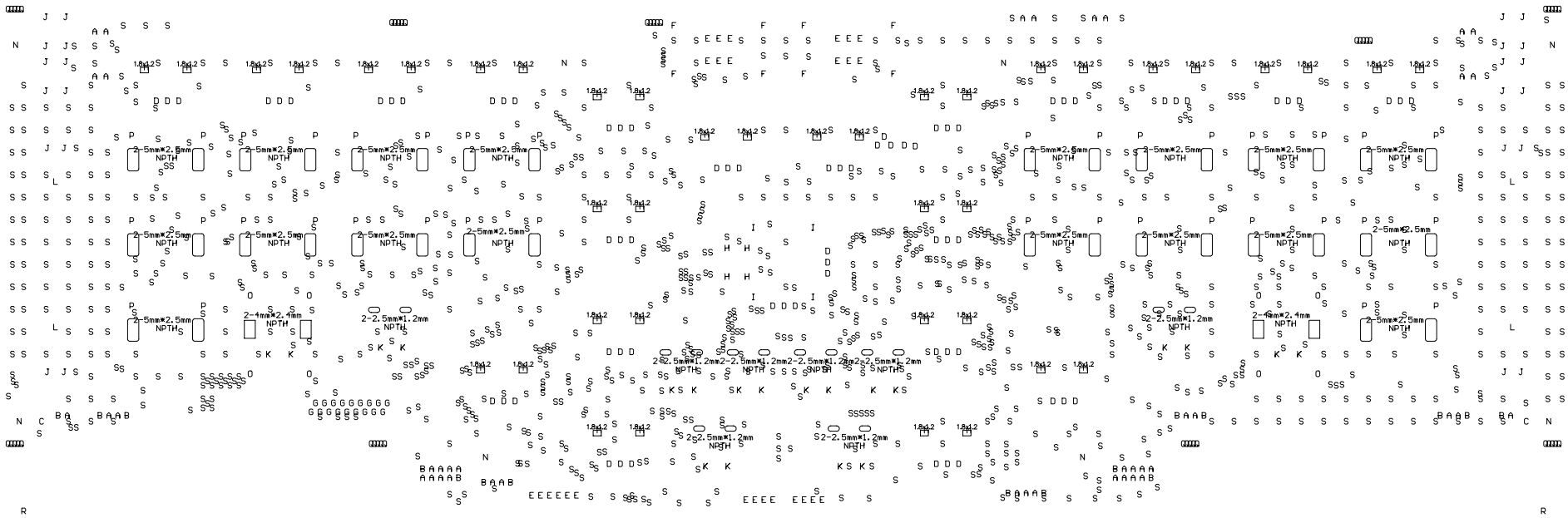

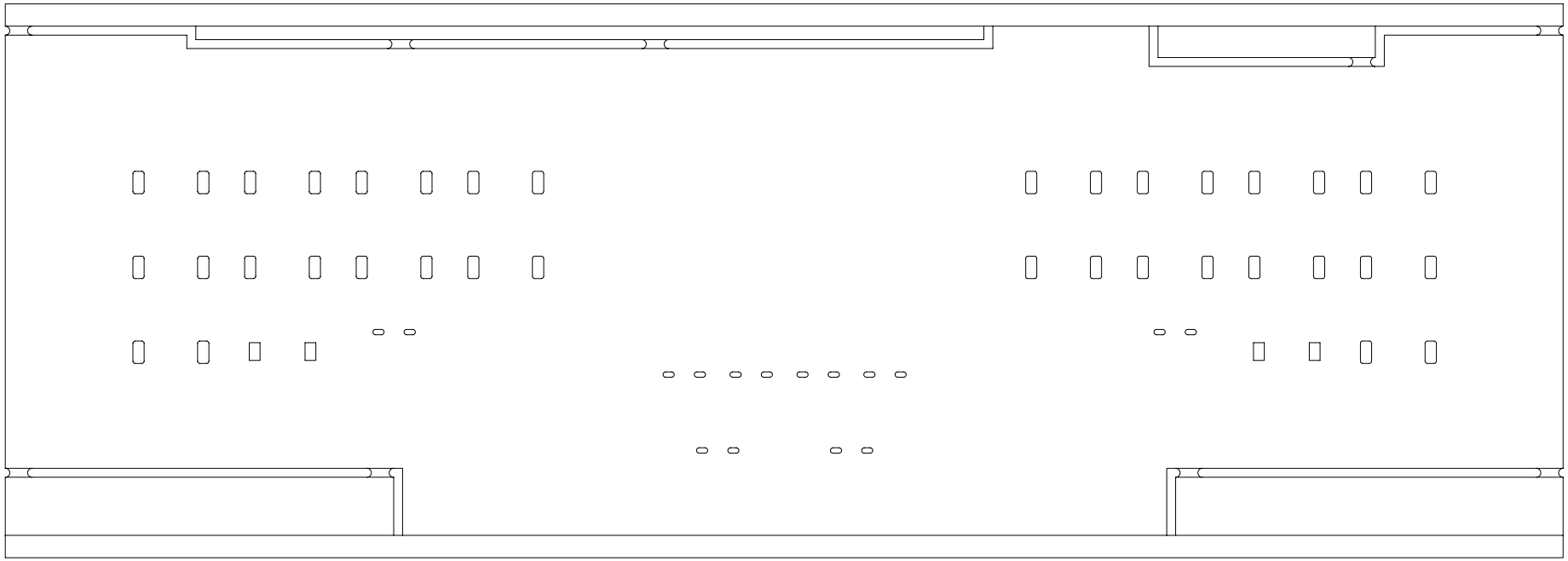

Top Layer

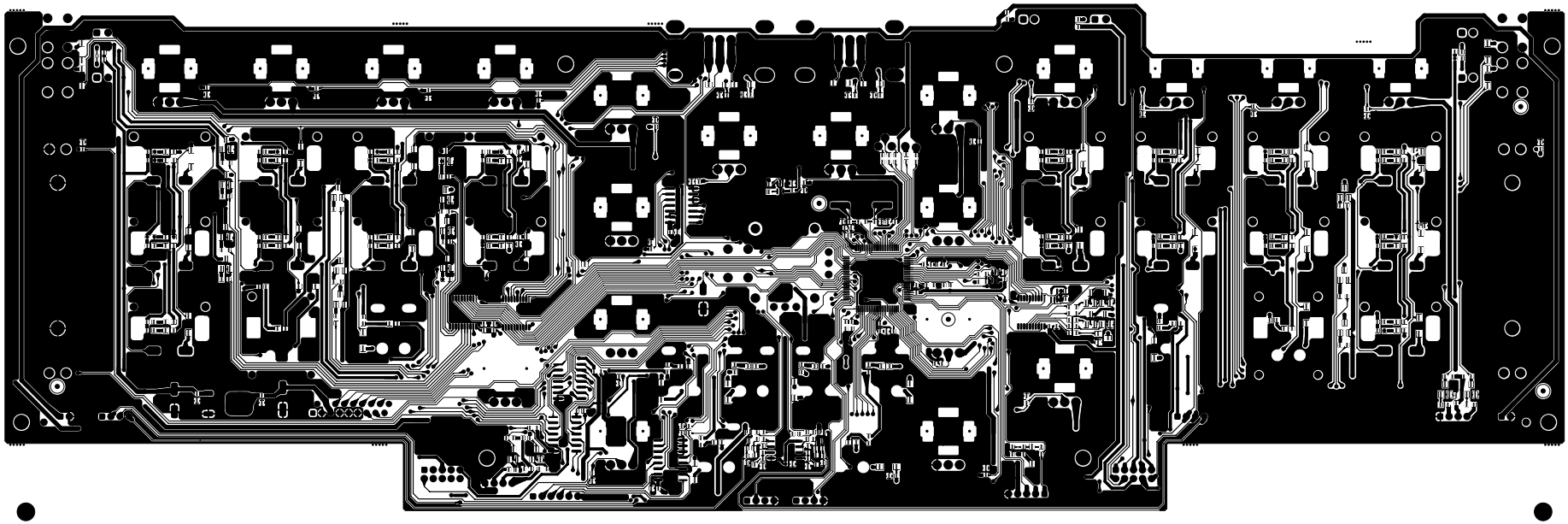

Top Overlay Layer

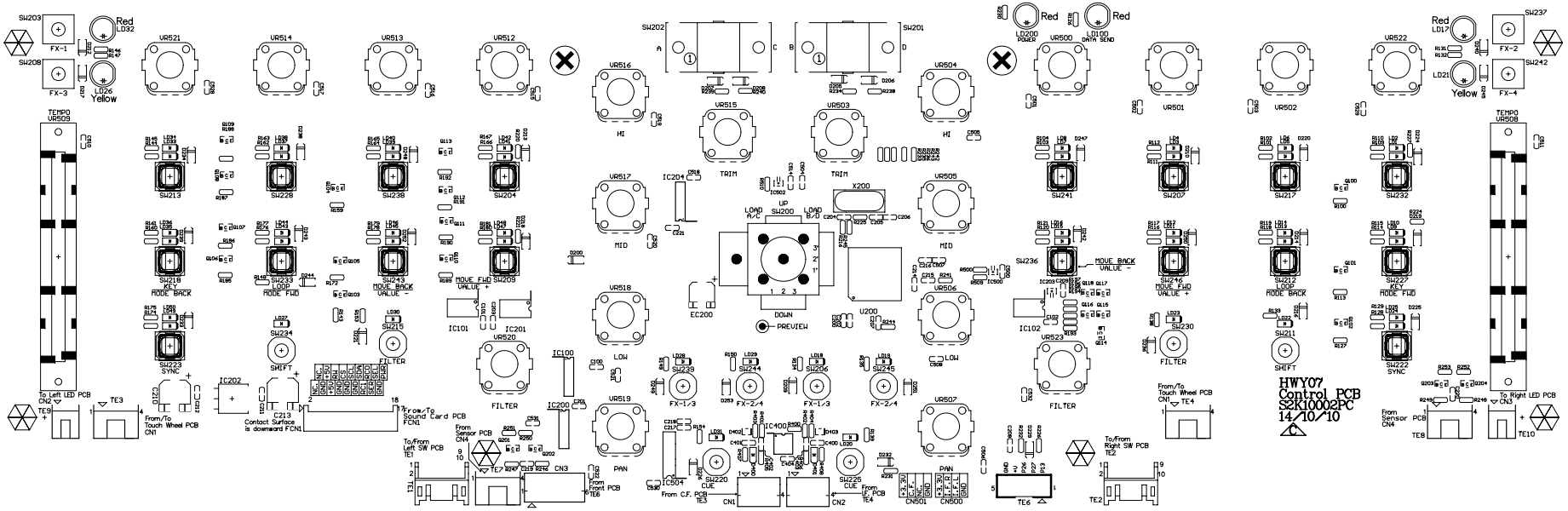

Top Paste Layer

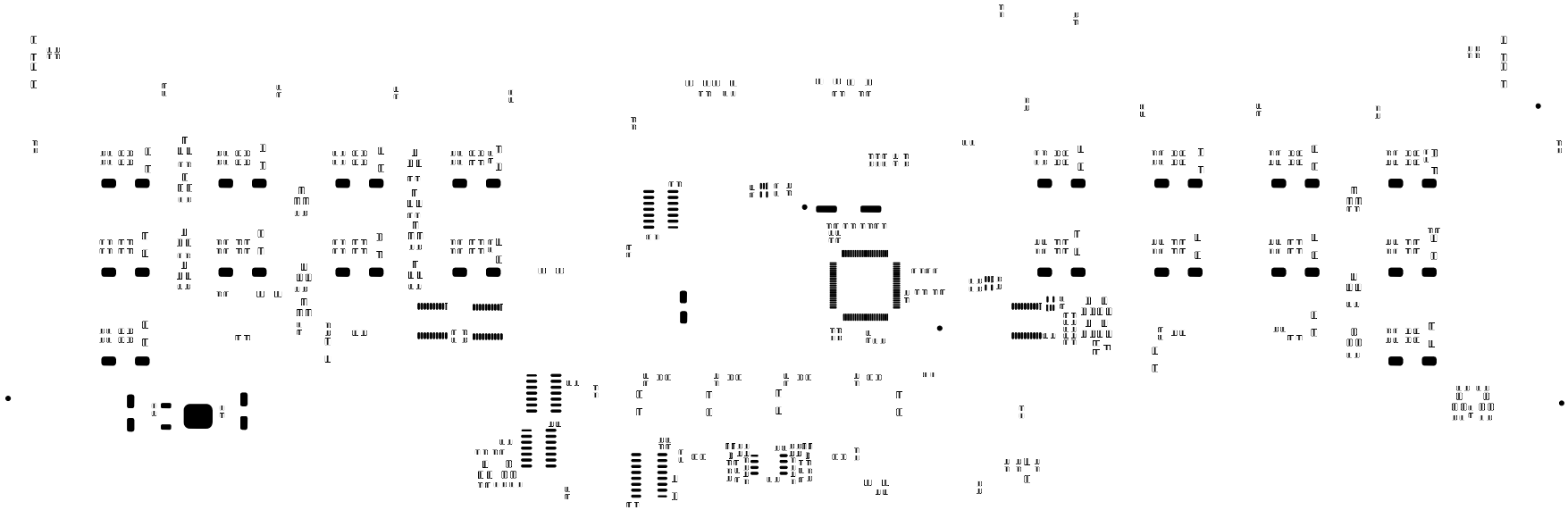

Top Solder Layer

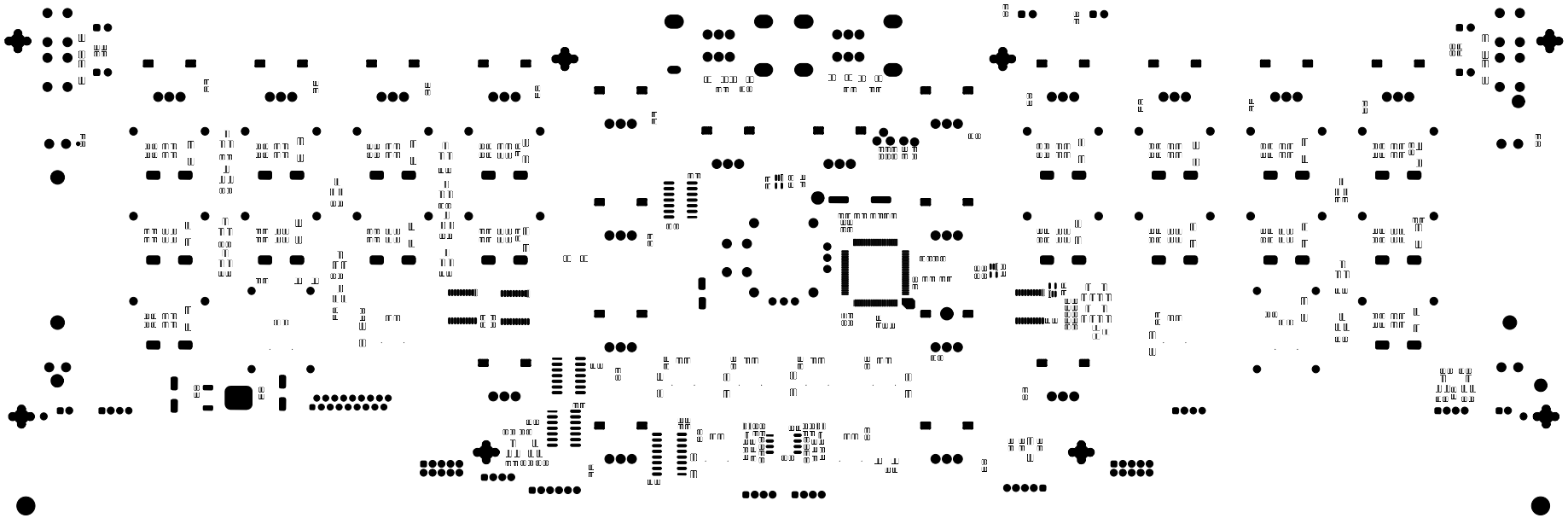

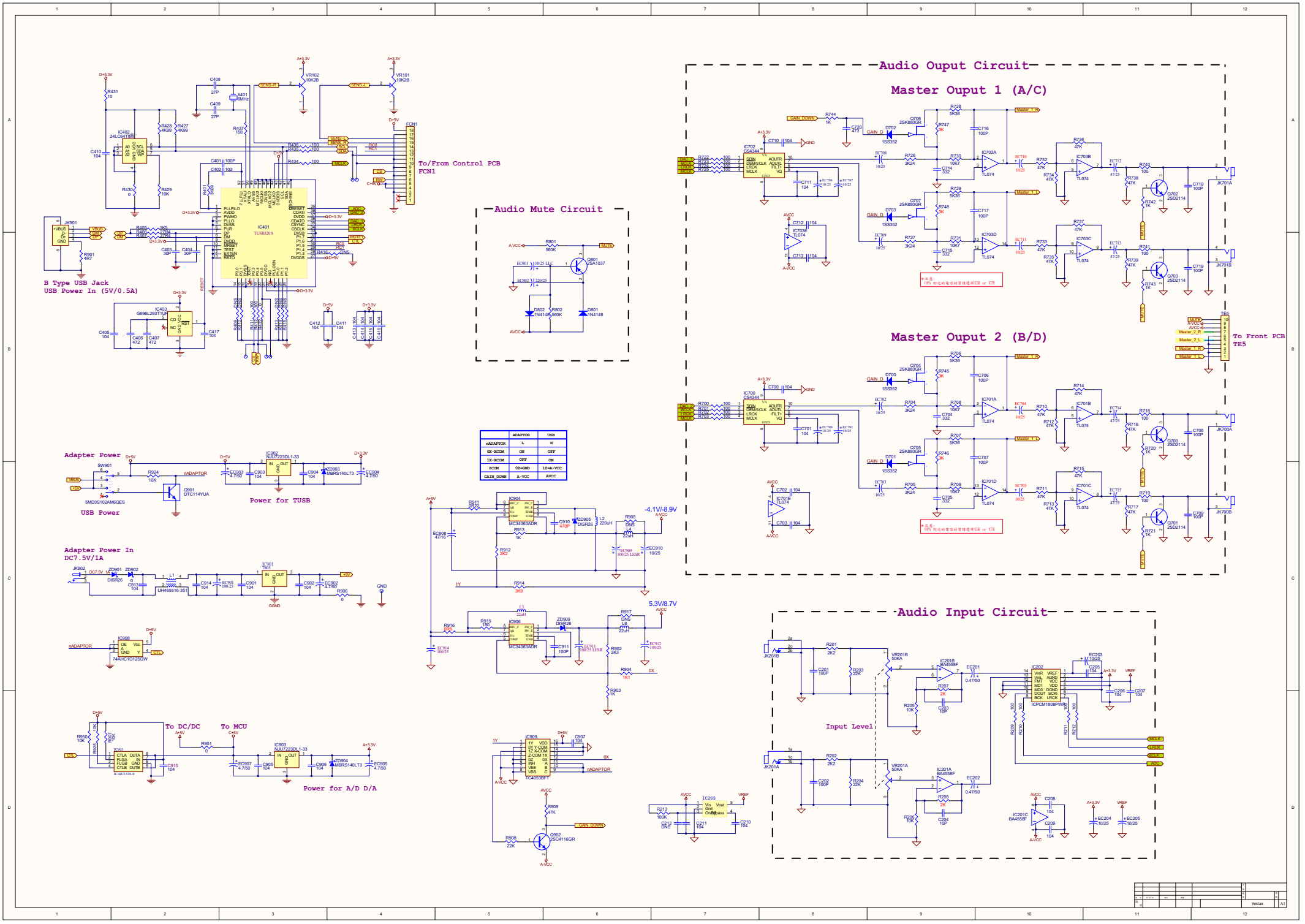

	ADAPTOR	USB
nADAPTOR	L	H
0X-XCOM	ON	OFF
1X-XCOM	OFF	ON
ZCOM	0Z-GND	1Z-A-VCC
GAIN_DOWN	A-VCC	AVCC

Bottom layer

Bottom Overlay Layer

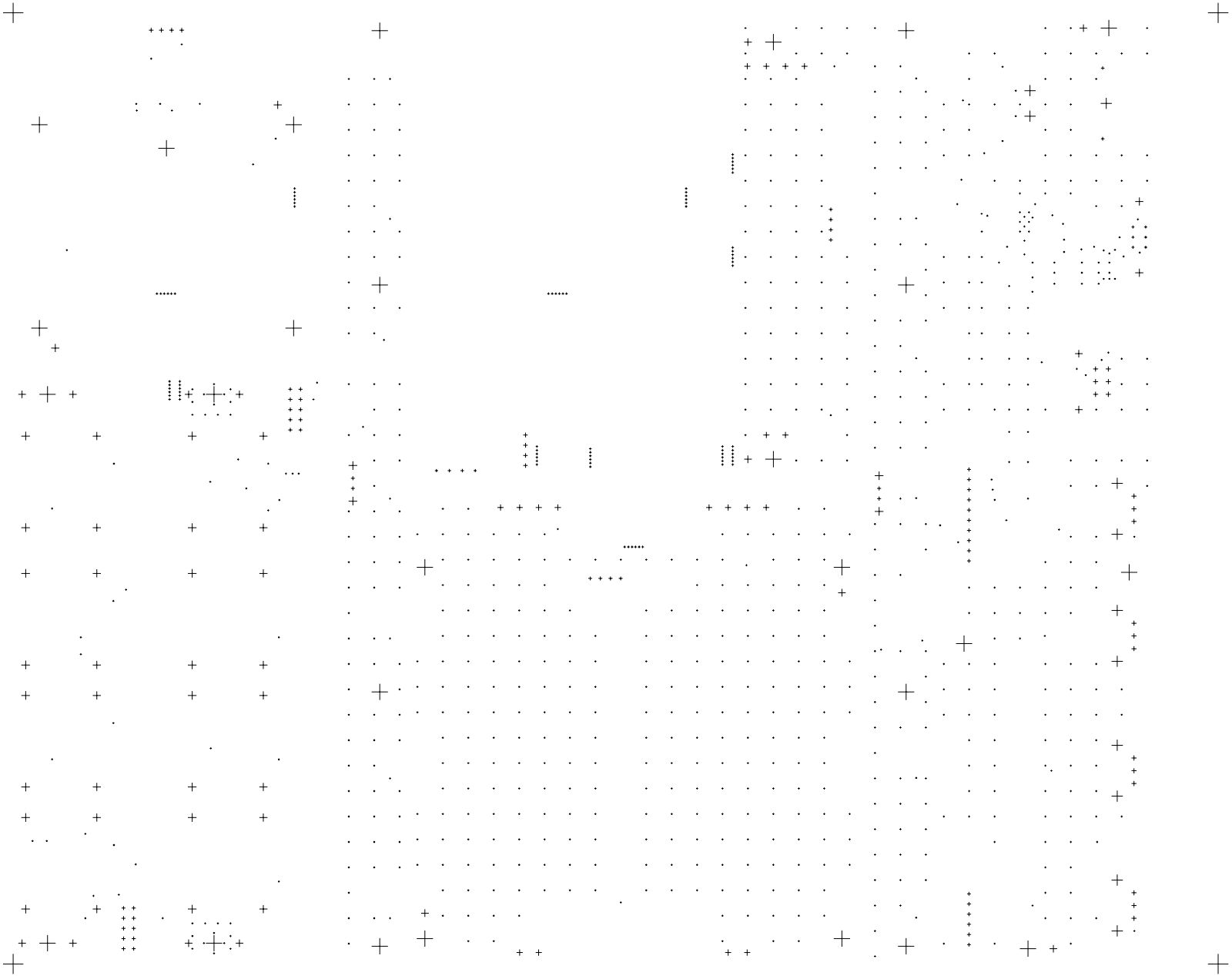

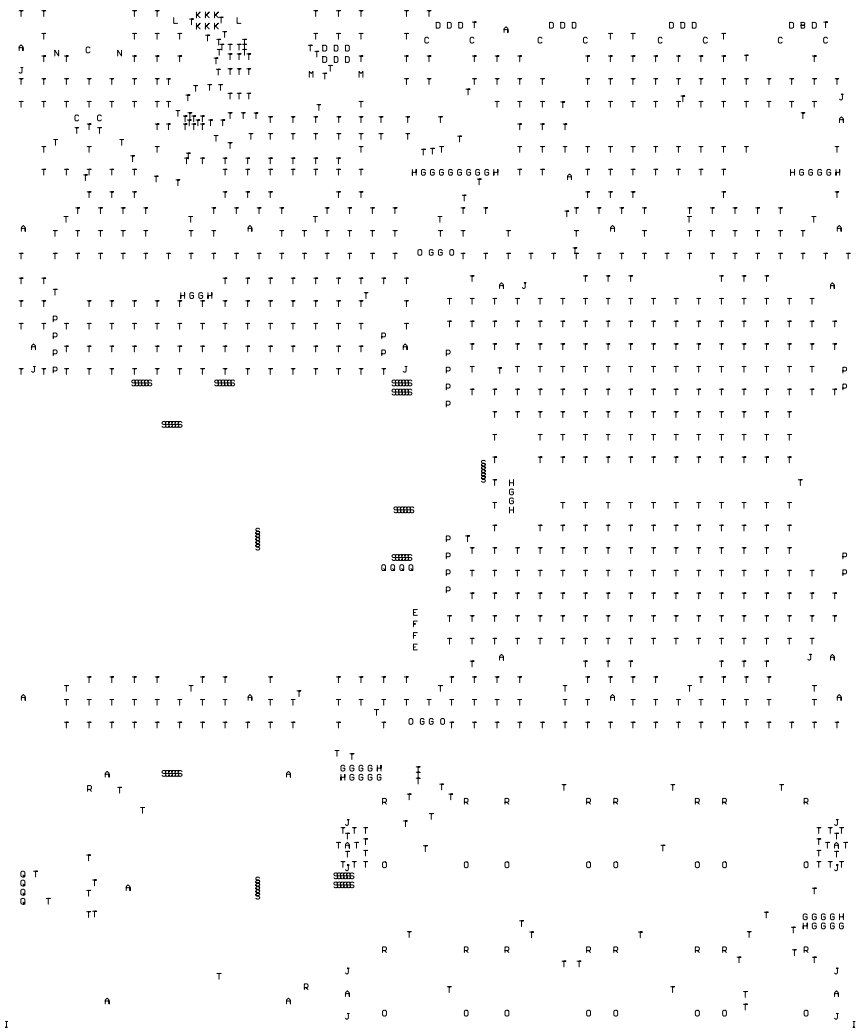

Symbol	Hit Count	Tool Size	Physical Length	Rout Path Length	Plated	Hole Type
T	813	0.4mm (15.748mil)			PTH	Round
S	78	0.5mm (19.685mil)			NPTH	Round
K	6	0.6mm (23.622mil)			PTH	Round
E	2	0.65mm (25.591mil)			PTH	Round
F	2	0.7mm (27.559mil)			PTH	Round
H	12	0.75mm (29.528mil)			PTH	Round
G	36	0.8mm (31.496mil)			PTH	Round
Q	8	0.9mm (35.433mil)			PTH	Round
B	1	1mm (39.37mil)			NPTH	Round
D	17	1mm (39.37mil)			PTH	Round
P	18	1.2mm (47.244mil)			PTH	Round
M	2	1.5mm (59.055mil)			PTH	Round
J	14	1.5mm (59.055mil)			NPTH	Round
L	2	1.6mm (62.992mil)			PTH	Round
R	18	1.6mm (62.992mil)			NPTH	Round
O	20	1.7mm (66.929mil)			NPTH	Round
C	11	2.2mm (86.614mil)			PTH	Round
A	27	3.2mm (125.984mil)			NPTH	Round
I	4	4mm (157.48mil)			NPTH	Round
N	2	0.7mm (27.559mil)	2.5mm (98.425mil)	1.8mm (70.866mil)	NPTH	Slot
	1093 Total					

Slot definitions : Rout Path Length = Calculated from tool start centre position to tool end centre position.
Physical Length = Rout Path Length + Tool Size = Slot length as defined in the PCB layout

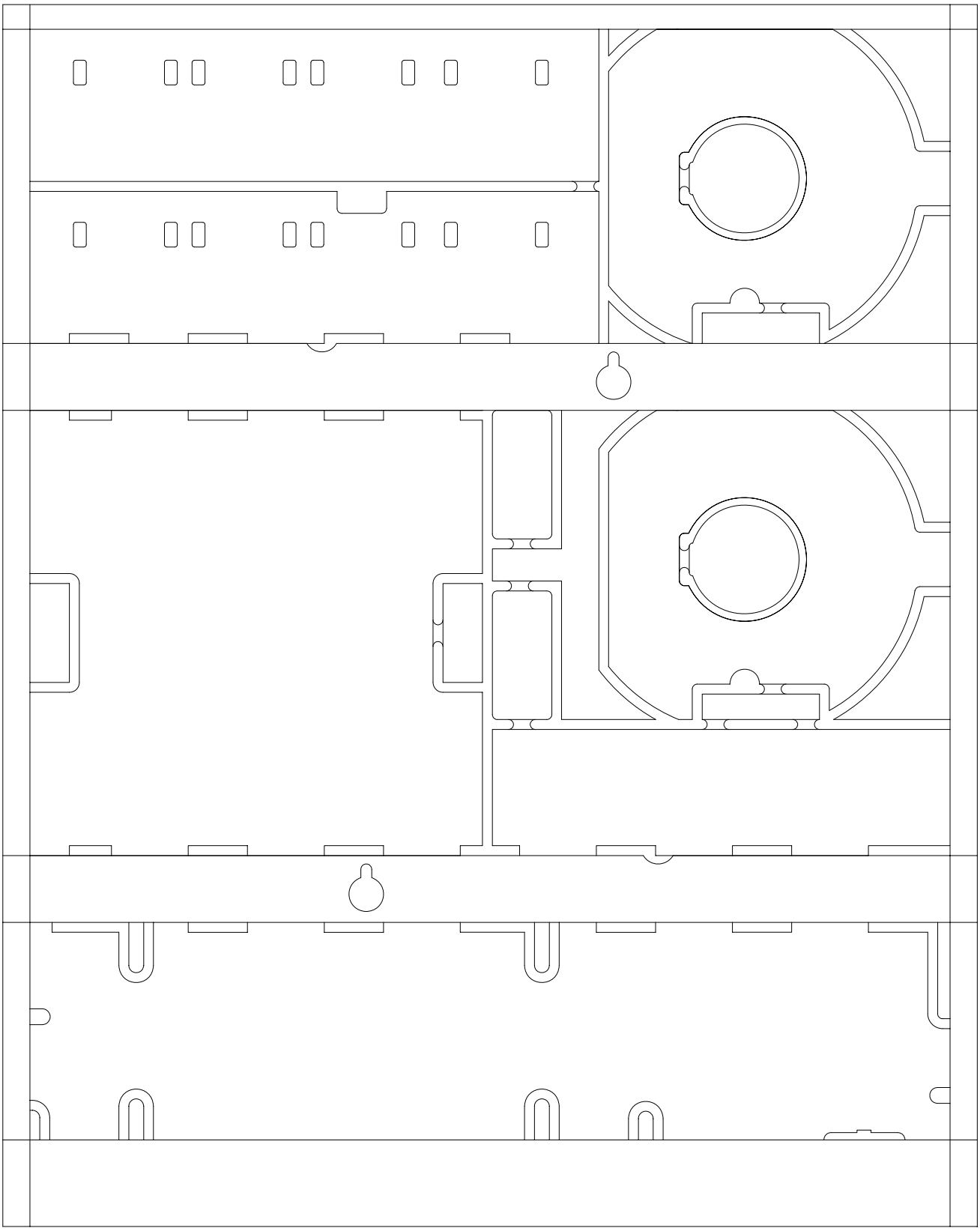

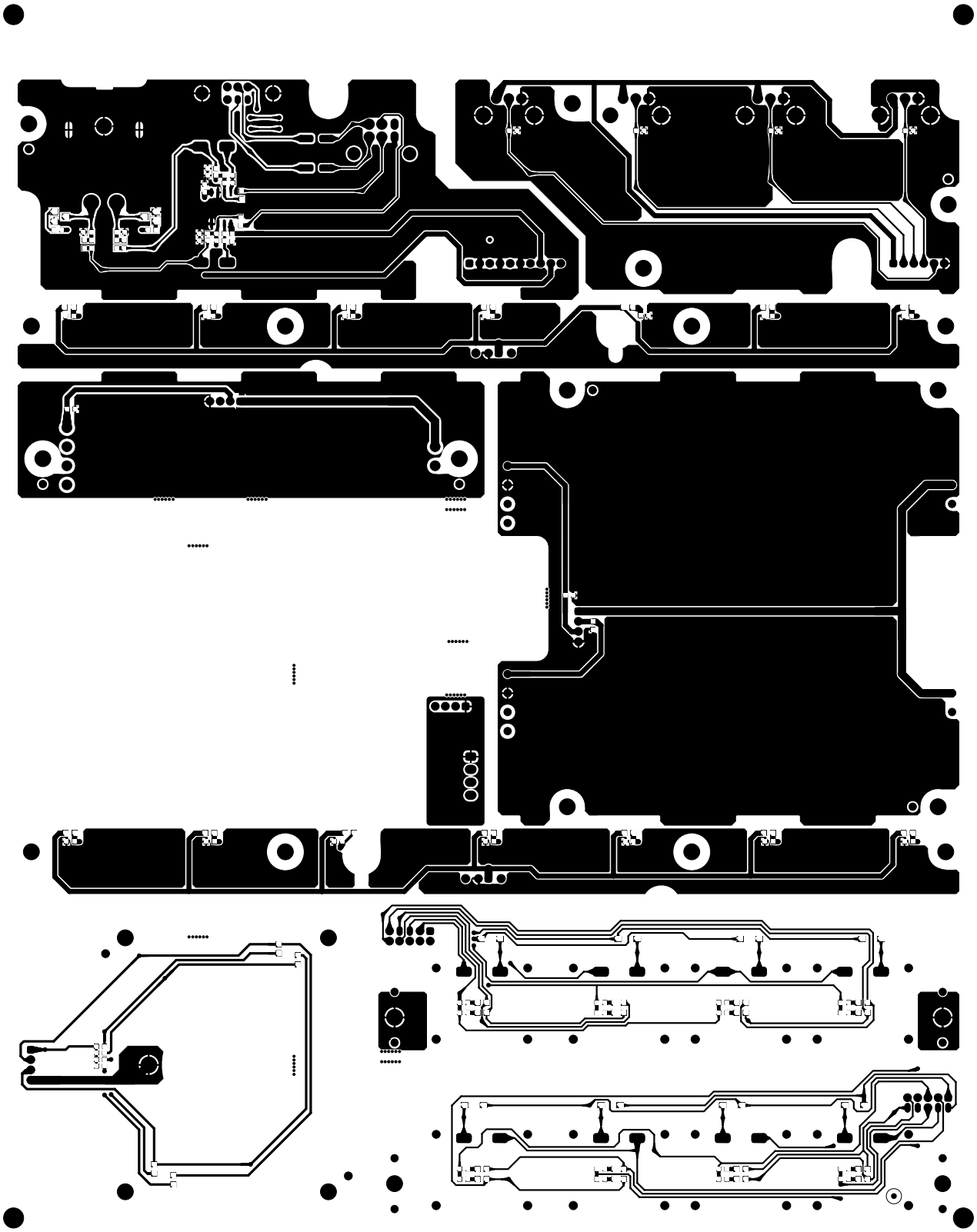

Top Layer

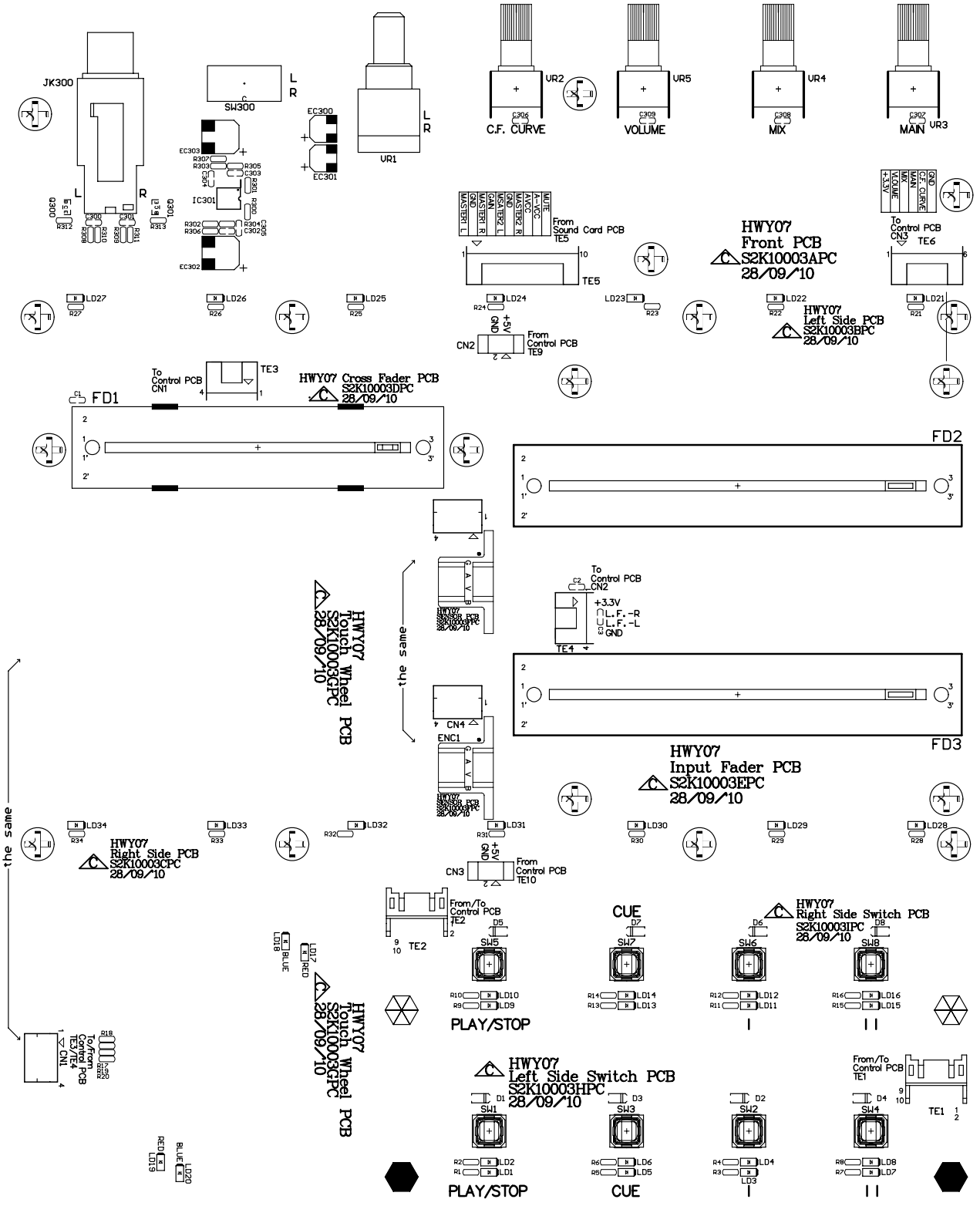

Top Overlay Layer

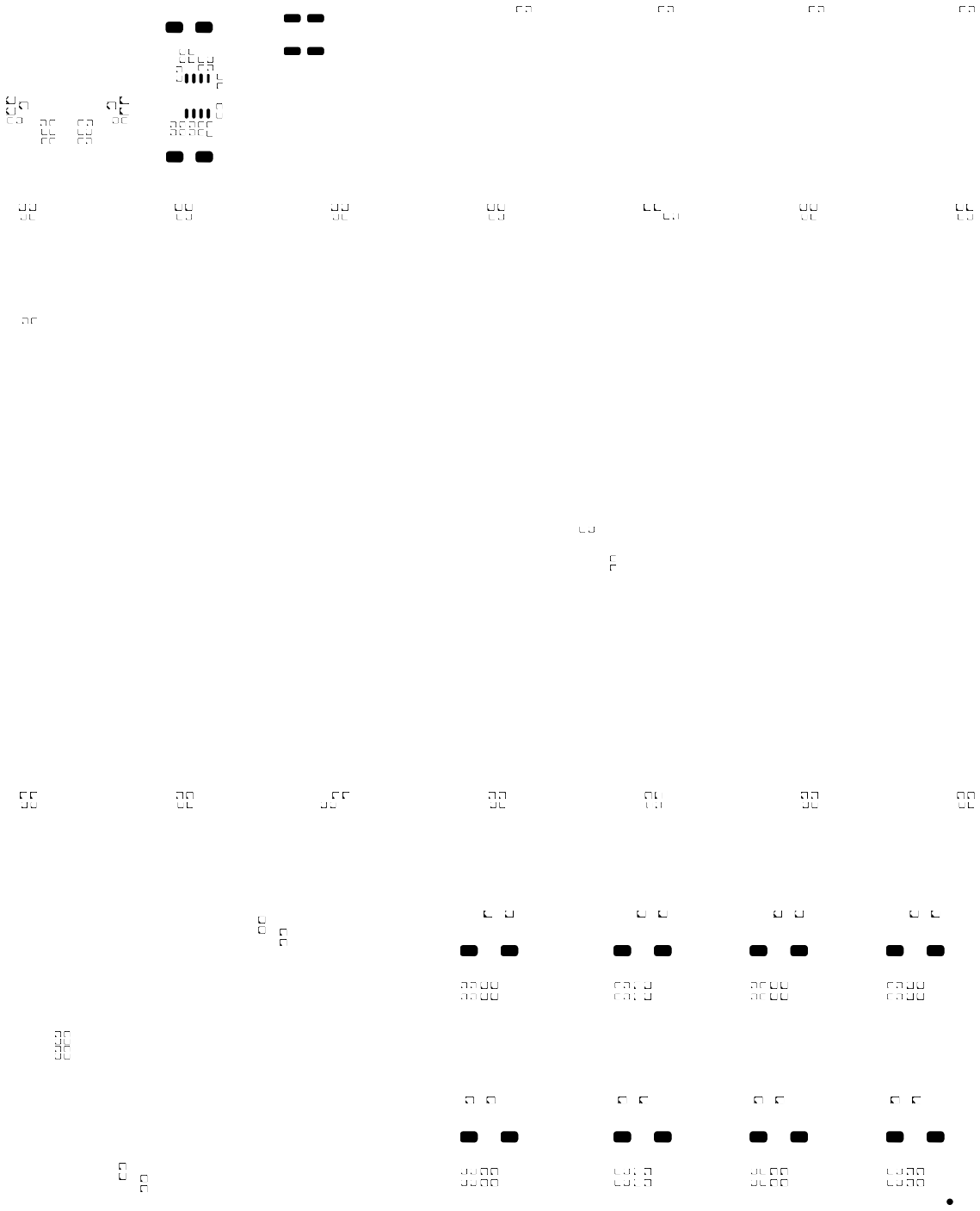

Top Paste Layer

Top Solder Layer

Bottom Solder Layer