VESTAX

SERVICE NOTE

MODEL: VCI - 100

1. SPECIFICATIONS P. 2 - P. 12

2. CIRCUIT DIAGRAM P. 13 - P. 16
4. COMPONENTS LIST P. 17 - P. 19

Vestax Corporation Service Department

(2007-06-02)

VESTAX CORP. TOKYO
info@vestax.com
VESTAX SERVICE EUROPE
RHEINSTR. 213
53332 BORNHEIM/GERMANY
Tel. +49 2222 952372
Fax +49 2222 952374
tech@vestax.com

Features

The VCI-100 is a highly PROFESSIONAL product, with sensor JOG wheel and control technology from our turntables. Also featured is a variable curve generator that controls the crossfader curve from the hardware with original faders. The VCI-100 is built with high quality mechanical parts and a PCB designed for accurate and stable operations.

- 90 parameters of various software are assignable to the VCI-100's control section via USB MIDI IN/OUT.

- The JOG wheel is constructed with a high-resolution pulse sensor; touch sensor and acrylic platter mechanism. With this combination, operations such as pitch bending, scanning and scratching can be performed with speed and accuracy.

- The resistance value of the fader movement is AD converted and sent to the software along with curve information created by the CPU inside the VCI-100. Therefore, you can adjust the crossfader curve to your preference whether or not the software you use has curve control.

- The DATA SEND LED and JOG wheel SENSOR LED provides a clear visual of the current status to assist in an authentic play mode in real time.

- The power source is selectable from USB bus-power and the exclusive power adaptor. (For best performance and stable operation, please use the power adaptor if the computer's power capacity is low or if using a USB hub)

- There are no issues if you don't have any software to operate. TRAKTOR LE (Native Instrument Inc.) is bundled to the VCI-100 with exclusive control assignment files.

- The VCI-100 is USB MIDI class compliant and provides simple plug & play features working with Apple and Windows computers.

- Compatible with all software that allows MIDI control assignment. Each software's samples of MIDI control assignment files will be available at www.vestax.com.

- The metal body is almost the same size as a standard Laptop, thin but highly durable, compact and convenient for transportation.

1.Minimum system requirements

a) Operating System

●Windows

Requires Windows XP Service Pack 2. Does not support Windows 2000/98/Me

NOTE: DO NOT connect to a Windows 2000 Professional PC. The display screen will turn blue and the computer may freeze.

●Macintosh

Supports Mac OS X 10.3.9 / 10.4.7. Does not support previous system versions.

Multi client environments that operate the VCI-100 with more than 1 software are not supported.

b) Hardware

●Windows

CPU: Pentium III 500 MHz (Advanced CPU required for laptops)
Memory: 256MB RAM
USB 2.0 Interface

●Macintosh

CPU: Macintosh G3 600/G4 667MHz (Advanced CPU required for laptops)
Memory: 256MB RAM
USB 2.0 Interface

●These minimum system requirements are for the VCI-100 hardware. If the software's system requirements are higher than the VCI-100, please prepare a qualified advanced operating system.

●Macintosh CPU accelerator cards are not supported. The computer must have USB connection.

●The VCI-100 will not operate if the sound device is a YAMAHA AC-XG Audio Device.

※ Above are minimum requirements and does not guarantee performance for all computers and devices.

2. Install and Operation

The VCI-100 is USB MIDI class compliant and provides simple plug and play with Macintosh OS X and Windows XP. Drivers are not required.

(1) Windows XP

1.Set the power select switch on the rear panel to AC ADAPTOR when using the exclusive AC adaptor. Set to USB BUSS POWER if using USB connection to provide power from your computer.

NOTE: Please use the exclusive power adaptor for stable operation if the USB is connected to a non-powered USB hub or if the computer does not have enough power capacity.

2.Connect the VCI-100 to the computer via USB.
The power LED, Jog wheel, control switch LED will light up.
A window will pop up and say a new device has been detected and drivers for Vestax PC-CONTROLLER, USB combined device and USB audio device will be installed automatically. (The message may not pop up if the driver is installed or if it's not the first time to be connected.)

3.The Data send LED will blink along with each movement of the VCI-100 to indicate the output of the control signals when the drivers have been installed perfectly.

4.To check connection status in Windows XP, view [control panel] > [system] > [hardware] > [device manager] > inside USB controller find [USB combined device] (Property: Location: Vestax PC CONTROLLER) > inside sound, video and game controller find [USB Audio device] (Property: Location: Vestax PC-CONTROLLER). If both are displayed and the status is "This device is installed normally", the VCI-100 and computer is connected normally.

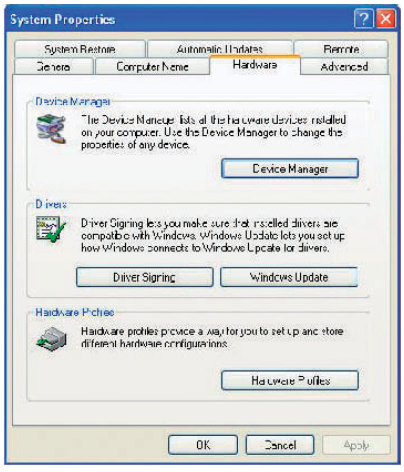

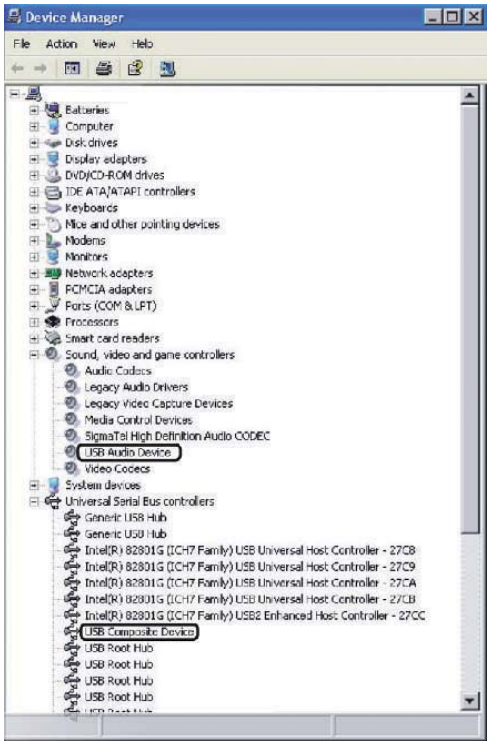

(2) Macintosh

1.Set the power select switch on the rear panel to AC ADAPTOR when using the exclusive AC adaptor. Set to USB BUSS POWER if using USB connection to provide power from your computer.

NOTE: Please use the exclusive power adaptor for stable operation if the USB is connected to a non-powered USB hub or if the computer does not have enough power capacity.

2.Connect the VCI-100 to the computer via USB.
The power LED, Jog wheel, control switch LED will light up.
A window will pop up and say a new device has been detected and drivers for Vestax PC-CONTROLLER, USB combined device and USB audio device will be installed automatically. (The message may not pop up if the driver is installed or if it's not the first time to be connected.)

3.The Data send LED will blink along with each movement of the VCI-100 to indicate the output of the control signals when the drivers have been installed perfectly.

4. to check the connection status in Macintosh, view [Applications] > [Utilities] > [Audio MIDI setting] > [MIDI device] and find "Vestax PC-CONTROLER". The property shall show,
Device: Vestax PC CONTROLLER
Manufacturer: Vestax
Model: Vestax PC-CONTROLLER
The computer and the VCI-100 are connected normally if the information above is shown.

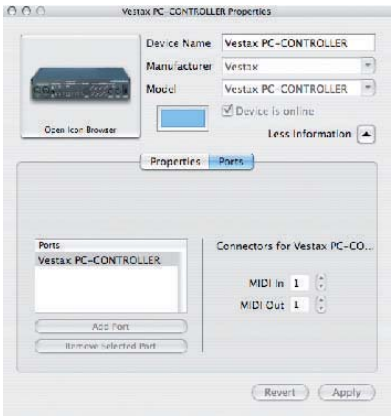

(3) Software

MIDI compliant software is required to be installed to your computer to use the VCI-100. The VCI-100 is bundled with pre-control assigned Native Instruments Inc., TRAKTOR LE. If you do not have MIDI compliant DJ software, voluntarily install TRAKTOR LE by following instructions and checking the system requirements.

3. Operations

1) Check if the software is installed to the computer and OS normally, and is fully functional.

2) Check if the VCI-100 and computer is connected normally.

3) Check that the software is set to operate with the VCI-100. Open the software's control panel and check that the software is set to receive MIDI data from the VCI-100.

4) Check that the VCI-100 and computer is connected and then start up the software to perform settings with the VCI-100. The software may not recognize the VCI-100 if it is connected to the computer after the software has started.

5) Operations after the system recovering from power saving mode is not guaranteed.
Power save settings are required to be set OFF.

Many DJ software products(Native Instruments TRAKTOR, M-AUDIO torq, Abeleton Live6, MixVibes) come with a MIDI LEARN function. This function is used to assign switches, knobs and faders of the VCI-100 as controls for parameters of the software.

The VCI-100 can control all software that has this function.

The MIDI LEARN setting for each software is different; please refer to each software's manual for further instructions.

The MIDI CC data created with the knobs, faders and switches can be manually set with the soft ware, if the software does not support the MIDI LEARN function. Please refer to the software's manual for further instructions.

Certain software does not have MIDI OUT functions. If so, functions of the software cannot be assigned to the VCI-100. Please be aware that the Jog wheel of the VCI-100 sends a high-resolution pulse for accurate control but does not operate higher than the receiving software's resolution settings.

(Ex. The play KEY LED's off signal of TRAKTOR 3.0 is not sent to the VCI-100, which leaves the play key LED of the VCI-100 turned ON even if the deck on the screen has stopped. On the other hand, TRAKTOR 3.2 has MIDI out functions and the operations in the screen will match with the VCI-100's LEDs.)

3. Part name & Functions

Part names and functions are all set to default for easy operation and can be changed to match any style. For example, if you wish to have precise pitch control you can change the setting from 45mm stroke to 60mm stroke.

Top Panel

(1) Loop / Sampler section
The loop sampler of the software is assignable.
Lighting Square Push SW: 3 loop plays
Round Small Push SW + LED: 4 selectable loop lengths (1/4, 1/2, 3/4,1)

(2)Cursor Section
File selection and "enter" functions assignable.
Lighting Square Push SW: 4-direction cursor keys & enter key

(3) Pitch / tempo / JOG section (per channel)
Pitch control, key control, pitch range selection, JOG wheel mode selection is assignable.
45mm Fader Volume: 1pce
2 color Lighting Square Push SW: 1pce
Lighting Square Push SW: 3pcs

(4)JOG Wheel section (per channel)
High-resolution rotary pulse generator and touch sensor for control. Search, pitch bend, stop&go, scratch functions assignable.
Touch sense SW: 1pce
Touch sensitivity LED: 1pce
High-resolution pulse generator dial: 1pce

(5)Transport Section (per channel)
PLAY / PAUSE, CUE-PLAY, FF, REW functions assignable.
2 color Lighting Square Push SW: 4pcs

(6)Cross Fader
Vestax's original high quality cross fader. Assignable to the software's cross fader. The cross fader curve is adjustable with the curve adjust volume located on the rear panel. Useful for software's without crossfader curve functions and adjustable to suite curves from long mixes to scratching.
45mm stroke variable curve generate fader : 1pce

(7) Channel section (per channel)
Mixer control functions assignable. Select a function most useful for your play style.
Rotary volume: 5pcs
Small rotary volume: 1pce
2 color Lighting Square Push SW: 1pce
Lighting Square Push SW: 1pce
60mm High quality fader: 1pce

(8)Effect and/or Universal section

Controls of effects, EQs and isolators are assignable.
Lighting Square Push SW + Rotary Volume Set: 4set
Lighting Square Push SW + 3 LED: 1set
Round small Push SW + LED: 2set

(9)Master section

Master section functions of the software assignable to 3 volume controls and 1 switch.
Lighting Square Push SW: 1pce
Small Rotary volume: 3pcs

(10)POWER LED

This LED lights when power is provided from the AC adaptor or USB cable.

(11)DATA SEND LED

This LED lights when the VCI-100 has been operated and the MIDI control signal is being sent normally to the computer. If this LED does not light-up, parts of the power source or controller may have worn out.

(12)SENSOR LED

This LED indicates the sensitivity of the touch sensor and lights up when the touch sensor is operated.

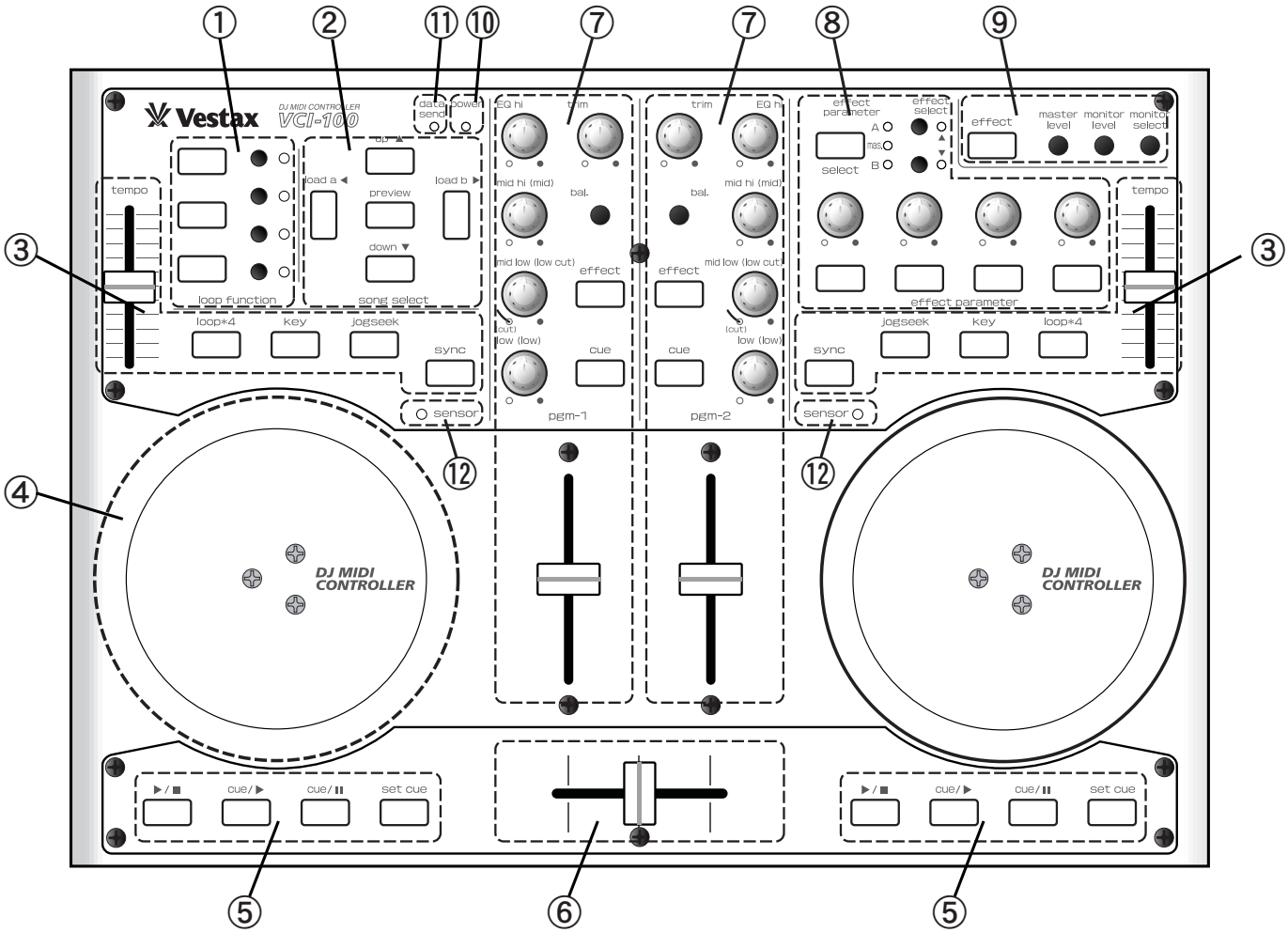

REAR PANEL SECTION

(13)Touch Sensitivity level volume

The VCI-100 uses a capacitance type touch sensor, which allows the sensitivity to be controlled with this volume for temperature, humidity and the users capacitance differences. Adjust the sensitivity level by touching the metal part of the JOG wheel and turning the volume, until the sensor LED lights up. The touch sensor will react without direct touch when the sensitivity is at the maximum level.

(14)C.F. curve control volume

The cross fader curve control, an original function added to a DJ mixer by Vestax, has been applied to the VCI-100. The curve is gentle and suitable for long mixes when it's at the minimum, and sharp and suitable for scratching when it's at the Maximum.

(15)Power SW (Adaptor / OFF / Buss power)

Power switch of the VCI-100. Set the switch to AC ADAPTOR when using the exclusive AC adaptor, set to USB BUSS POWER when using power provided from the computer via USB.

NOTE: Please use the exclusive power adaptor for stable operation if the USB is connected to a non-powered USB hub or if the computer does not have enough power capacity.

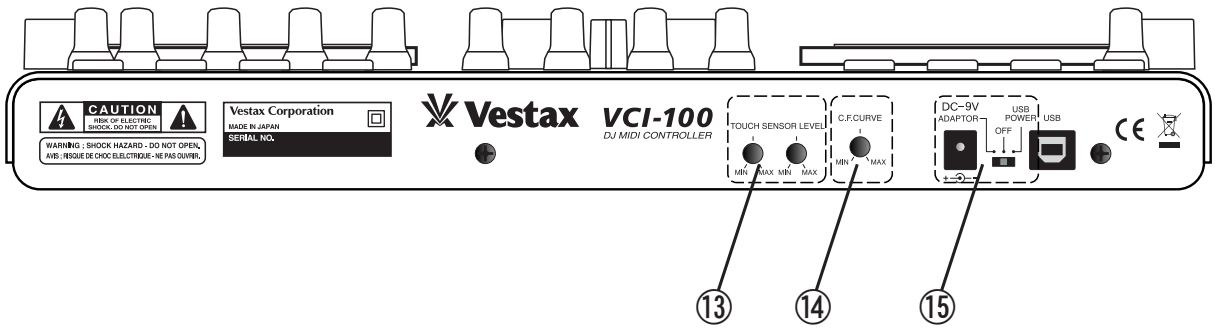

4. Troubleshooting

A) The computer doesn't recognize the VCI-100

We recommend not to connect other USB devices to the computer when mixing / editing with music / video software. USB is a reliable protocol but multimedia software is CPU-intensive to the processor and USB buss. It is possible to connect multiple USB devices to one USB outlet on the computer via hubs, but may cause complicated problems to the hardware and software.

1. Disconnect any other USB devices connected to your computer and see if the VCI-100 is recognized.
2. Open Control Panel >> System >> Select the hardware tab and then click on "Device manager". Click the "+" on the left of "Sound, Video, Game controller". Disconnect the VCI-100 if there is a "?" or "!" mark next to "USB audio device" and check that "USB audio device" disappears from the device manager list. If it disappears, reconnect the VCI-100 to a different USB port and see if the problem is solved.
3. Check if the DJ software is set to use the VCI-100 as its controller. Check the software's preference, or open the control section and check if the software is recognizing "USB audio device" and set to receive MIDI send data from the VCI-100.
4. Check if the USB cable is connected correctly.
5. If the VCI-100 is connected via USB hub, check if the problem solves by connecting directly to the computer.

B) There's no sound coming from the computer

The VCI-100 is a simple USB MIDI controller and does not input or output any sound data. If the computer does not output sound signals, the relation between the software, OS and hardware is not working normally.
Please contact the software's support center.

C) The sound doesn't output when the VCI-100 is connected.

The controls assign setting for the VCI-100 and software may be incorrect. Move all volumes, faders and switches to check if the master out, cross fader and monitor volumes level is zero. Also check, which switches the mute control is assigned to.

5.MIDI MAP

MIDI Channel = ch1	Note: MIDI Note On	CC: MIDI Control Change	
Control	MIDI	Control	MIDI
TOUCH1(Jog Mode)	Note C−3(30 hex) (ch1)	VR19(Effect Param = B)	CC76(4C hex) (ch1)
TOUCH2(Jog Mode)	Note C#3(31 hex) (ch1)	VR20(Effect Param = B)	CC77(4D hex) (ch1)
ENC1(Jog Mode, TOUCH1=On)	CC16(10 hex) (ch1)		
ENC2(Jog Mode, TOUCH2=On)	CC17(11 hex) (ch1)		
SW1	Note D−3(32 hex) (ch1)	ENC1(TOUCH1=Off, Time Stretch=Off)	Note A#3(3A hex) (ch1)
SW5	Note F#3(36 hex) (ch1)	ENC1(TOUCH1=Off, Time Stretch=Off)	Note B−3(3B hex) (ch1)
VR1	CC8(08 hex) (ch1)	ENC2(TOUCH2=Off, Time Stretch=Off)	Note C−4(3C hex) (ch1)
SW3	Note E−3(34 hex) (ch1)	ENC2(TOUCH2=Off, Time Stretch=Off)	Note C#4(3D hex) (ch1)
SW7	Note G#3(38 hex) (ch1)	ENC1(Seek Mode, TOUCH1=On)	CC18(12 hex) (ch1)
SW2	Note D#3(33 hex) (ch1)	ENC2(Seek Mode, TOUCH2=On)	CC19(13 hex) (ch1)
SW6	Note G−3(37 hex) (ch1)	SW21	Note F#4(42 hex) (ch1)
SW4	Note F−3(35 hex) (ch1)	SW40	Note G−4(43 hex) (ch1)
SW8	Note A−3(39 hex) (ch1)	SW22	Note G#4(44 hex) (ch1)
VR6	CC21(15 hex) (ch1)	SW39	Note A−4(45 hex) (ch1)
VR6(CENTER)	Note D#0(0F hex) (ch1)	SW26	Note C−5(48 hex) (ch1)
VR7	CC22(16 hex) (ch1)	SW28	Note C#5(49 hex) (ch1)
VR7(CENTER)	Note E−0(10 hex) (ch1)	SW25, SW36(Effect Param = A)	Note D−5(4A hex) (ch1)
VR8	CC23(17 hex) (ch1)	SW27, SW36(Effect Param = B)	Note D#5(4B hex) (ch1)
VR8(CENTER)	Note F−0(11 hex) (ch1)	SW32, SW36(Effect Param = Mas.)	Note E−5(4C hex) (ch1)
VR5	CC20(14 hex) (ch1)	SW30(Effect Param = A)	Note F−5(4D hex) (ch1)
VR5(CENTER)	Note D−0(0E hex) (ch1)	SW30(Effect Param = B)	Note F#5(4E hex) (ch1)
VR4	CC14(0E hex) (ch1)	SW30(Effect Param = Mas.)	Note G−5(4F hex) (ch1)
VR4(CENTER)	Note C−0(0C hex) (ch1)	SW31(Effect Param = A)	Note G#5(50 hex) (ch1)
VR9	CC28(1C hex) (ch1)	SW31(Effect Param = B)	Note A−5(51 hex) (ch1)
VR9(CENTER)	Note C−1(18 hex) (ch1)	SW31(Effect Param = Mas.)	Note A#5(52 hex) (ch1)
VR17(Effect Param = Master)	CC84(54 hex) (ch1)	SW33(Effect Param = A)	Note B−5(53 hex) (ch1)
VR18(Effect Param = Master)	CC85(55 hex) (ch1)	SW33(Effect Param = B)	Note C−6(54 hex) (ch1)
VR19(Effect Param = Master)	CC86(56 hex) (ch1)	SW33(Effect Param = Mas.)	Note C#6(55 hex) (ch1)
VR20(Effect Param = Master)	CC87(57 hex) (ch1)	SW34(Effect Param = A)	Note D−6(56 hex) (ch1)
VR10	CC30(1E hex) (ch1)	SW34(Effect Param = B)	Note D#6(57 hex) (ch1)
VR10(CENTER)	Note A#0(16 hex) (ch1)	SW34(Effect Param = Mas.)	Note E−6(58 hex) (ch1)
VR2	CC12(0C hex) (ch1)	SW35(Effect Param = A)	Note F−6(59 hex) (ch1)
VR12	CC31(1F hex) (ch1)	SW35(Effect Param = B)	Note F#6(5A hex) (ch1)
VR12(CENTER)	Note B−0(17 hex) (ch1)	SW35(Effect Param = A)	Note G−6(5B hex) (ch1)
VR11	CC29(1D hex) (ch1)	SW16	Note G#6(5C hex) (ch1)
VR11(CENTER)	Note C#1(19 hex) (ch1)	SW18	Note A−6(5D hex) (ch1)
VR3	CC13(0D hex) (ch1)	SW17(Preview Stop −> Play)	Note A#6(5E hex) (ch1)
VR13	CC24(18 hex) (ch1)	SW17(Preview Play −> Stop)	Note B−6(5F hex) (ch1)
VR13(CENTER)	Note F#0(12 hex) (ch1)	SW19	Note C−7(60 hex) (ch1)
VR14	CC25(19 hex) (ch1)	SW20	Note C#7(61 hex) (ch1)
VR14(CENTER)	Note G−0(13 hex) (ch1)	SW9	Note D−7(62 hex) (ch1)
VR15	CC26(1A hex) (ch1)	SW10	Note D#7(63 hex) (ch1)
VR15(CENTER)	Note G#0(14 hex) (ch1)	SW11	Note E−7(64 hex) (ch1)
VR16	CC27(1B hex) (ch1)	SW12	Note F−7(65 hex) (ch1)
VR16(CENTER)	Note A−0(15 hex) (ch1)	SW13	Note F#7(66 hex) (ch1)
VR22	CC7(07 hex) (ch1)	SW14	Note G−7(67 hex) (ch1)
VR23	CC88(58 hex) (ch1)	SW15	Note G#7(68 hex) (ch1)
VR24	CC89(59 hex) (ch1)	VR7(MIN)	Note A−7(69 hex) (ch1)
VR24(CENTER)	Note D−1(1A hex) (ch1)	VR15(MIN)	Note A#7(6A hex) (ch1)
VR21	CC15(0F hex) (ch1)	SWs relate to Deck A	Note B−7(6B hex) (ch1)
VR21(CENTER)	Note C#0(0D hex) (ch1)	Sws relate to Deck B	Note C−8(6C hex) (ch1)
VR17(Effect Param = A)	CC70(46 hex) (ch1)	SW24	Note A#4(46 hex) (ch1)
VR18(Effect Param = A)	CC71(47 hex) (ch1)	SW37	Note B−4(47 hex) (ch1)
VR19(Effect Param = A)	CC72(48 hex) (ch1)	ENC1(TOUCH1=Off, Time Stretch=On)	Note C#8(6D hex) (ch1)
VR20(Effect Param = A)	CC73(49 hex) (ch1)	ENC1(TOUCH1=Off, Time Stretch=On)	Note D−8(6E hex) (ch1)
VR17(Effect Param = B)	CC74(4A hex) (ch1)	ENC2(TOUCH2=Off, Time Stretch=On)	Note D#8(6F hex) (ch1)
VR18(Effect Param = B)	CC75(4B hex) (ch1)	ENC2(TOUCH2=Off, Time Stretch=On)	Note E−8(70 hex) (ch1)

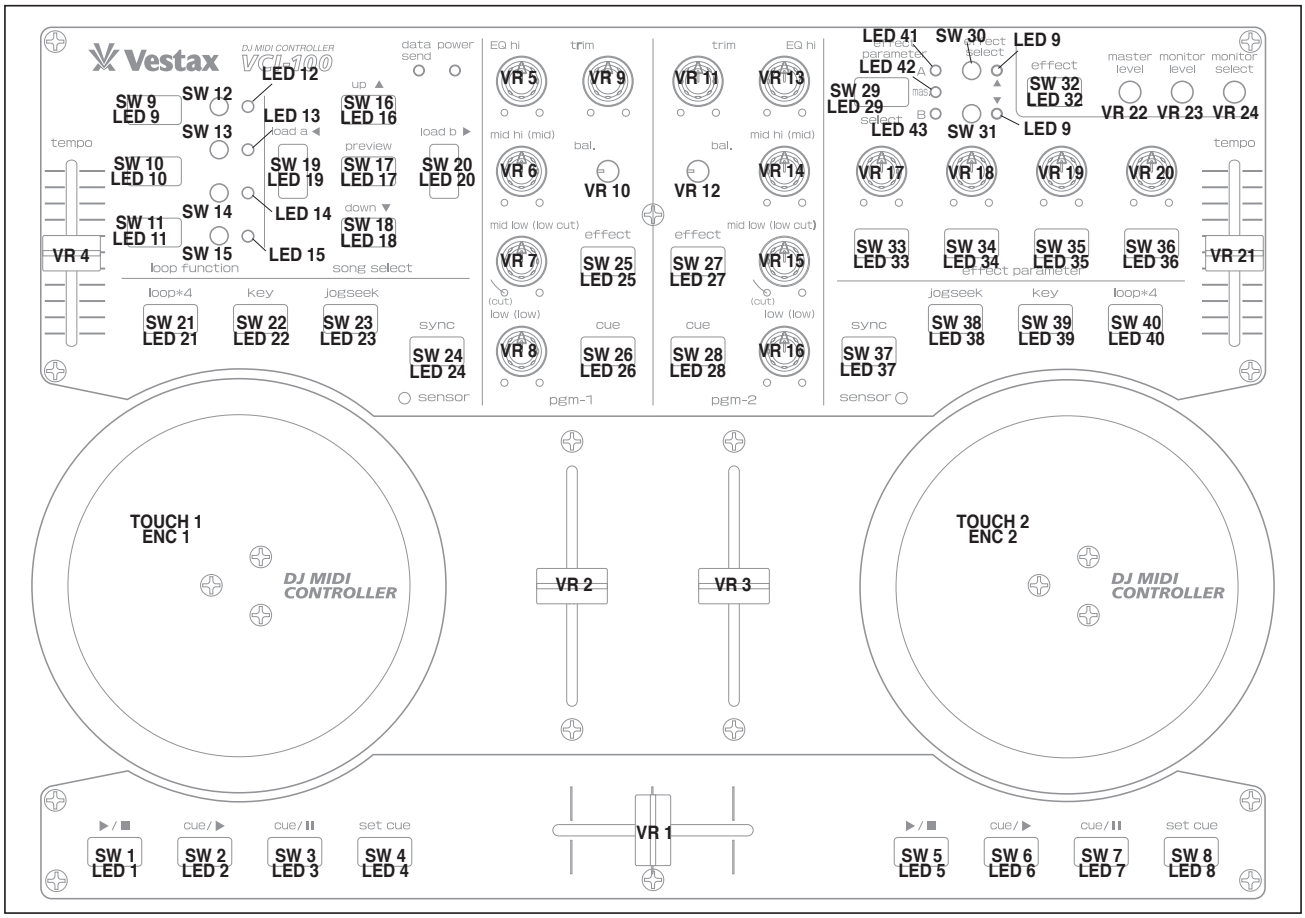

6.Specification

POWER SUPPLY:DC 9V 500mA
DEMENTIONS:360(W)×252(D)×35(H)
WEIGHT: 2.6 kg

1. Functions, designs and system requirements are subject to change without notice.
2. Vestax is a copyright of Vestax corporation.
3. All logos and trademarks printed in this manual resides to the owner.

SW SCAN

to CPU BOARD J15

SCAN1
SCAN2
SCAN3
SCAN4
SCAN5
IN0
IN1
IN2
IN3
IN4
IN5
IN6
IN7

J200
CNASSY-200

D200 1SS133 SW200 SKHHALA010 loop_function_1	D203 1SS133 SW203 SKHHDHA010 loop_function_4	D206 1SS133 SW206 SKHHALA010 cursor_UP	D209 1SS133 SW209 SKHHALA010 preview (cursor_CENTER)	D212 1SS133 SW212 SKHHALA010 effect_A	D215 1SS133 SW215 SKHHALA010 select	D218 1SS133 SW218 SKHHALA010 effect_param_2	D221 1SS133 SW221 SKHHDHA010 effect_select_UP
D201 1SS133 SW201 SKHHALA010 loop_function_2	D204 1SS133 SW204 SKHHDHA010 loop_function_5	D207 1SS133 SW207 SKHHALA010 load_A	D210 1SS133 SW210 SKHHALA010 load_B	D213 1SS133 SW213 SKHHALA010 effect_B	D216 1SS133 SW216 SKHHALA010 effect_MAIN	D219 1SS133 SW219 SKHHALA010 effect_param_3	D222 1SS133 SW222 SKHHDHA010 effect_select_DOWN
D202 1SS133 SW202 SKHHALA010 loop_function_3	D205 1SS133 SW205 SKHHDHA010 loop_function_6	D208 1SS133 SW208 SKHHALA010 cursor_DOWN	D211 1SS133 SW211 SKHHALA010 jog/seek_A	D214 1SS133 SW214 SKHHALA010 cue_A	D217 1SS133 SW217 SKHHALA010 effect_param_1	D220 1SS133 SW220 SKHHALA010 jog/seek_B	D223 1SS133 SW223 SKHHALA010 effect_param_4
D224 1SS133 SW224 SKHHALA010 loopx4_A	D225 1SS133 SW225 SKHHDHA010 loop_function_7	D226 1SS133 SW226 SKHHALA010 key_A	D227 1SS133 SW227 SKHHALA010 sync_A	D228 1SS133 SW228 SKHHALA010 cue_B	D229 1SS133 SW229 SKHHALA010 sync_B	D230 1SS133 SW230 SKHHALA010 key_B	D231 1SS133 SW231 SKHHALA010 loopx4_B

to CPU BOARD J10

J201
CNASSY-201

AVCC

IC200 MC14051B — C200 0.1

R200 100Ω	VR200 RS45111 10KB	tempo_A	VR202 RK09L1140 10kB	EQ_hi_A
R201 100Ω	VR205 RK09L1140 10kB	EQ_midhi_A	VR208 RK09L1140 10kB	EQ_midlow_A
R202 100Ω	VR203 RK09L1140 10kB	EQ_low_A	VR206 RK09L1140 10kB	trim_A
R203 100Ω	VR209 RK09K113 10KBC.C	bal_A		
R204 100Ω				
R205 100Ω				
R206 100Ω				

IC201 MC14051B — C201 0.1

R207 100Ω	VR201 RK09L1140 10kB	trim_B	VR204 RK09K113 10KBC.C	bal_B
R208 100Ω	VR207 RK09L1140 10kB	EQ_hi_B	VR210 RK09L1140 10kB	EQ_midhi_B
R209 100Ω	VR212 RK09L1140 10kB	EQ_midlow_B	VR215 RK09L1140 10kB	EQ_low_B
R210 100Ω	VR218 RK09L1140 10kB	effect_V1		
R211 100Ω				
R212 100Ω				
R213 100Ω				

IC202 MC14051B — C202 0.1

R214 100Ω	VR211 RK09L1140 10kB	effect_V2	VR213 RK09L1140 10kB	effect_V3
R215 100Ω	VR216 RK09L1140 10kB	effect_V4	VR219 RK09K113 10KB	master_level
R216 100Ω	VR214 RK09K113 10KB	monitor_level	VR217 RK09K113 10KB	monitor_select
R217 100Ω	VR220 RS45111 10KB	tempo_B		
R218 100Ω				
R240 100Ω				
R241 100Ω				

to CPU BOARD J14

LED_DT2
LED_DT3
LED_DT4
LED_DT5
LED_DT6
LED_DT7
LED_DT8
LED_SC0
LED_SC1
LED_SC2
LED_SC3
LED_SC4
LED_SC5
LED_SC6
LED_SC7

J202
CNASSY-202

LD200 SLR-342YY sync_A
LD239 SLR-342MG
LD201 SLR-342YY cue_A
LD240 SLR-342MG
LD202 SLR-342YY cue_B
LD241 SLR-342MG
LD203 SLR-342YY sync_B
LD242 SLR-342MG

LD204 SLR-342DU loop_function_1	LD207 SLR-342DU loop_function_2	LD210 SLR-342DU loop_function_3	LD213 SLR-342MG load_A	LD216 SLR-342MG cursor_UP	LD219 SLR-342MG preview (cursor_CENTER)	LD222 SLR-342MG cursor_DOWN	LD224 SLR-342MG load_B
LD205 SLR-342MG loopx4_A	LD208 SLR-342MG key_A	LD211 SLR-342MG jog/seek_A	LD214 SLR-342MG effect_A	LD217 SLR-342MG effect_B	LD220 SLR-342YY select	LD223 SLR-342MG effect_MASTER	LD225 SLR-342DU effect_pram_1
LD206 SLR-342DU effect_param_2	LD209 SLR-342DU effect_param_3	LD212 SLR-342DU effect_param_4	LD215 SLR-342MG jog/seek_B	LD218 SLR-342MG key_B	LD221 SLR-342MG loopx4_B		
LD226 SLR-342VR loop_function_4	LD228 SLR-342VR loop_function_5	LD230 SLR-342VR loop_function_6	LD232 SLR-342VR loop_function_7	LD234 SLR-342VR touch_sense_A	LD236 SLR-342VR data_send	LD238 SLR-342VR power	
LD227 SLR-342VR A	LD229 SLR-342VR master	LD231 SLR-342VR B	LD233 SLR-342VR touch_sense_B	LD235 SLR-342VR effect_select_UP	LD237 SLR-342VR effect_select_DOWN		

Model	VCI-100 PC controller
Sheet	CONTROL board
YANO CIRCUIT LABO	
2-Mar-2007	1 / 1

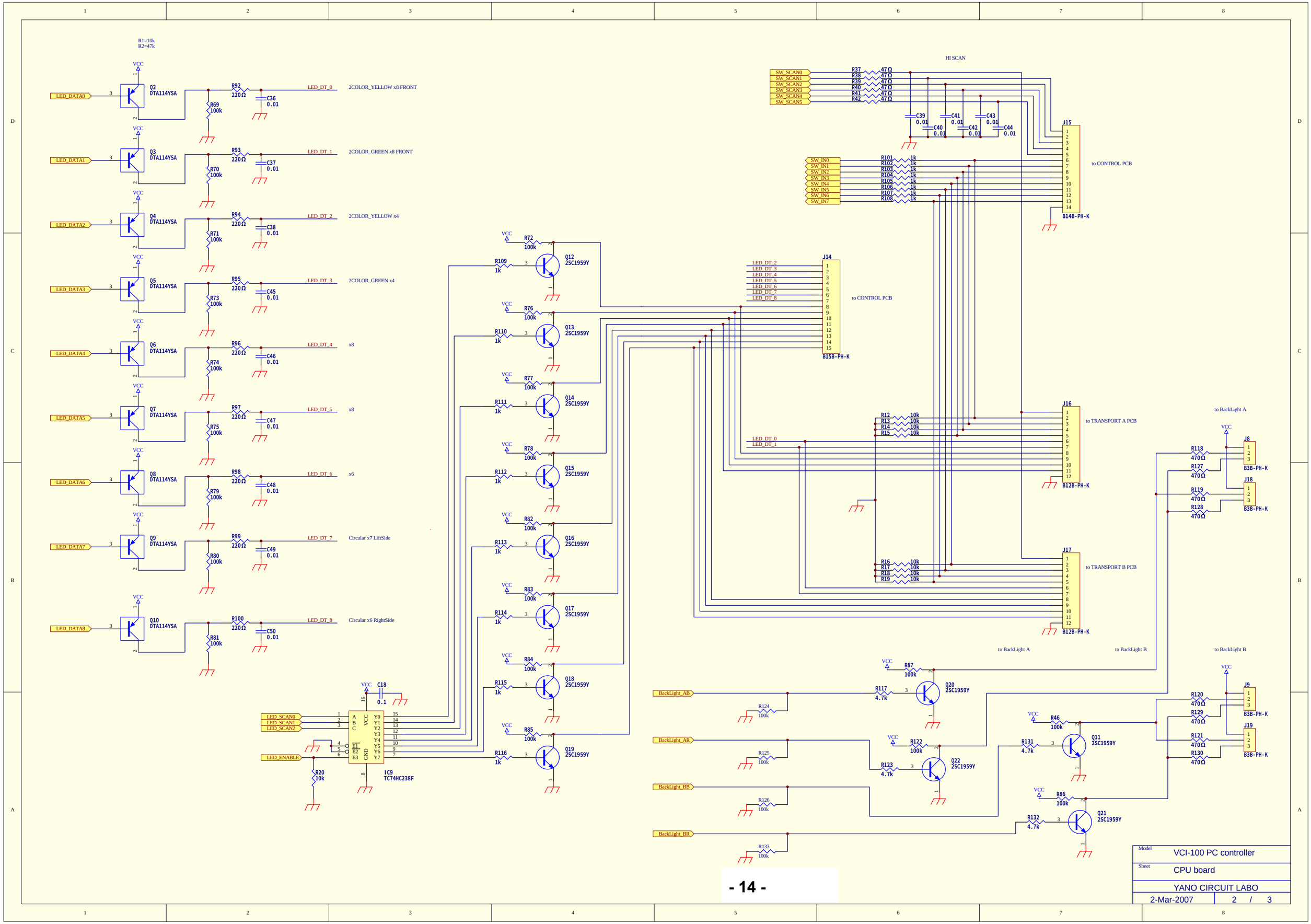
R1=10k
R2=47k
LED_DATA0
LED_DATA1
LED_DATA2
LED_DATA3
LED_DATA4
LED_DATA5
LED_DATA6
LED_DATA7
LED_DATA8
Q2 DTA114YSA
Q3 DTA114YSA
Q4 DTA114YSA
Q5 DTA114YSA
Q6 DTA114YSA
Q7 DTA114YSA
Q8 DTA114YSA
Q9 DTA114YSA
Q10 DTA114YSA
LED_DT_0
2COLOR_YELLOW x8 FRONT
LED_DT_1
2COLOR_GREEN x8 FRONT
LED_DT_2
2COLOR_YELLOW x4
LED_DT_3
2COLOR_GREEN x4
LED_DT_4
x8
LED_DT_5
x8
LED_DT_6
x6
LED_DT_7
Circular x7 LiftSide
LED_DT_8
Circular x6 RightSide
HI SCAN
SW_SCAN0
SW_SCAN1
SW_SCAN2
SW_SCAN3
SW_SCAN4
SW_SCAN5
SW_IN0
SW_IN1
SW_IN2
SW_IN3
SW_IN4
SW_IN5
SW_IN6
SW_IN7
J15
B14B-PH-K
to CONTROL PCB
J14
B15B-PH-K
to CONTROL PCB
J16
B12B-PH-K
to TRANSPORT A PCB
J17
B12B-PH-K
to TRANSPORT B PCB
to BackLight A
to BackLight B
J8
B3B-PH-K
J18
B3B-PH-K
J9
B3B-PH-K
J19
B3B-PH-K
LED_SCAN0
LED_SCAN1
LED_SCAN2
LED_ENABLE
IC9
TC74HC238F
BackLight_AB
BackLight_AR
BackLight_BB
BackLight_BR
Q20 2SC1959Y
Q22 2SC1959Y
Q11 2SC1959Y
Q21 2SC1959Y
Model
VCI-100 PC controller
Sheet
CPU board
YANO CIRCUIT LABO
2-Mar-2007
2 / 3

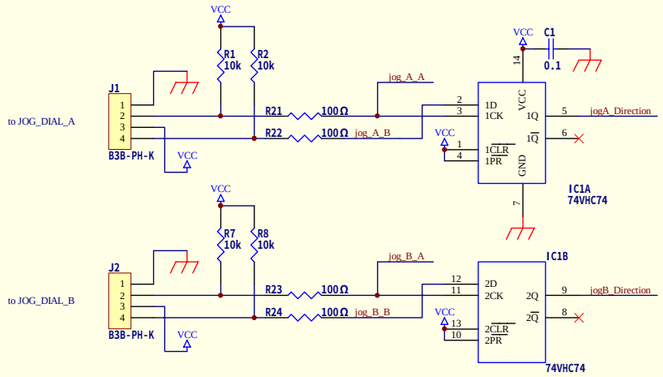

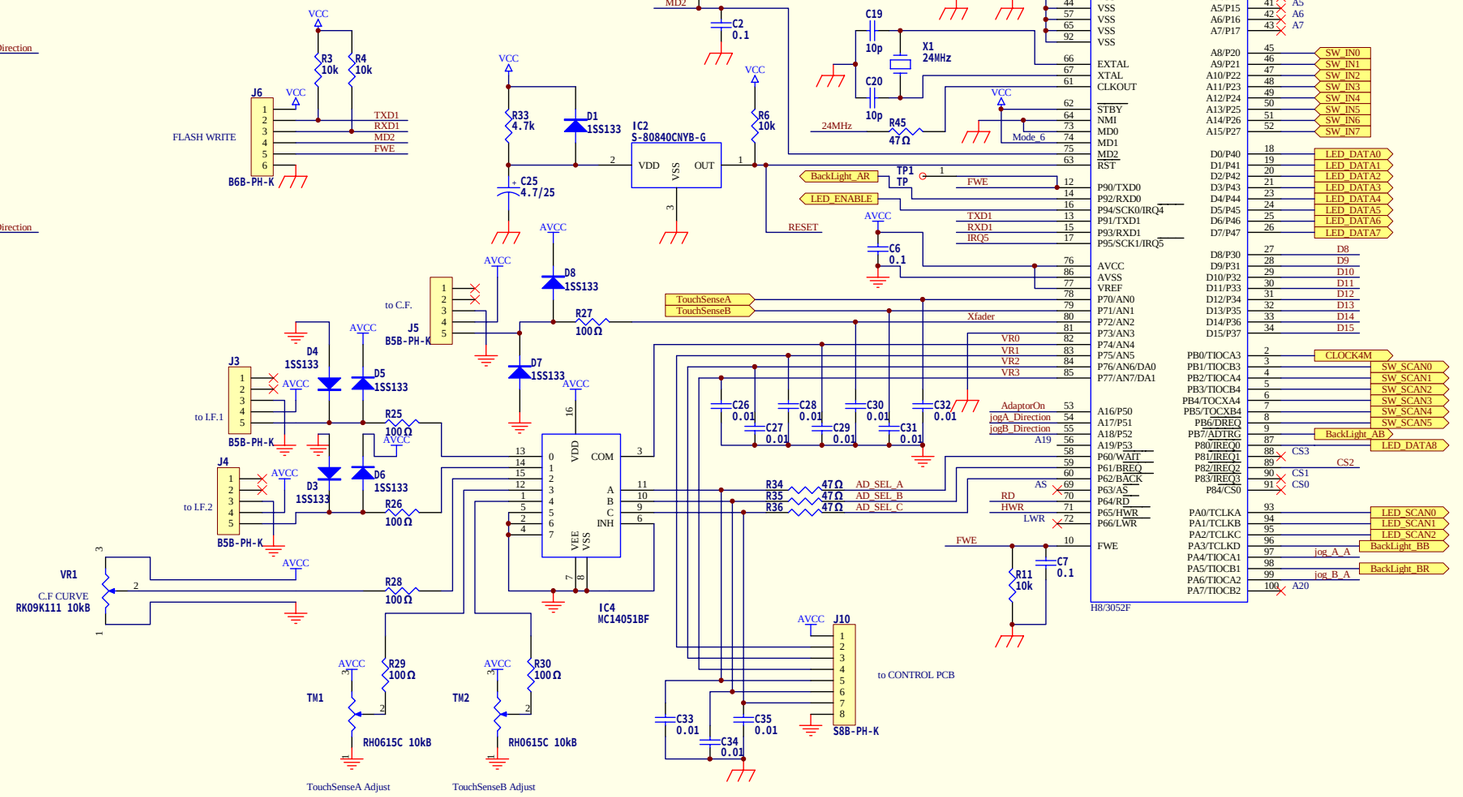

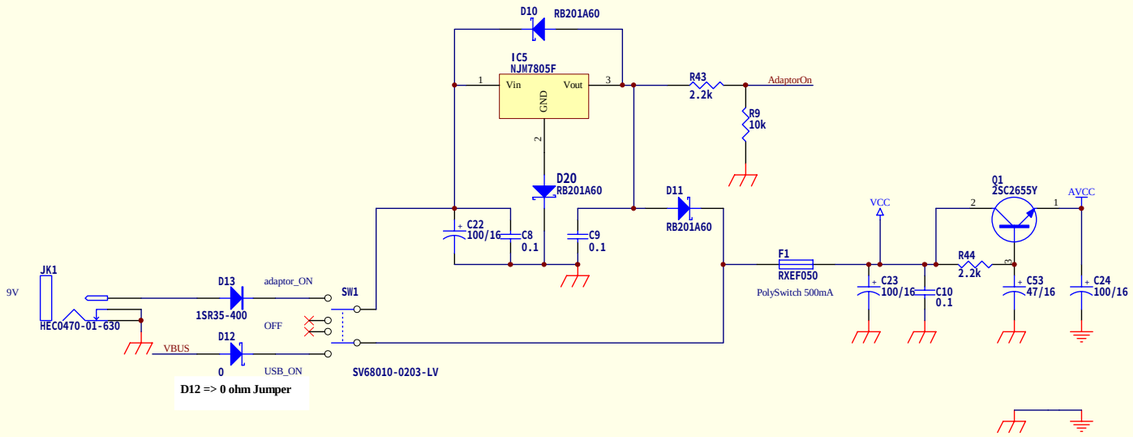

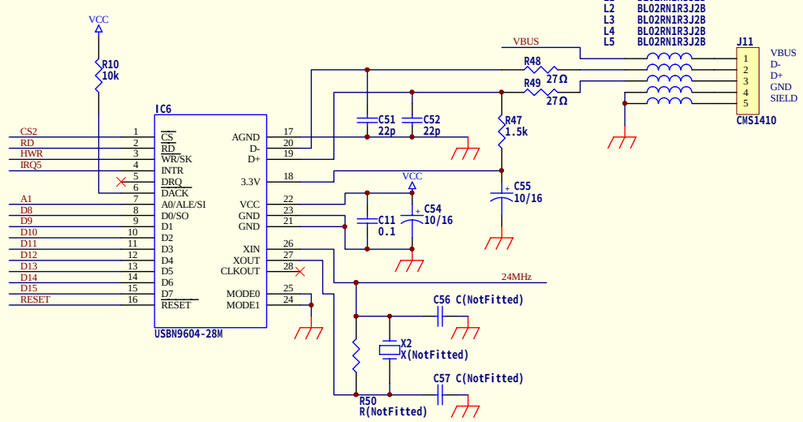

Model	VCI-100 PC controller
Sheet	CPU board
	YANO CIRCUIT LABO
2-Mar-2007	1 / 3

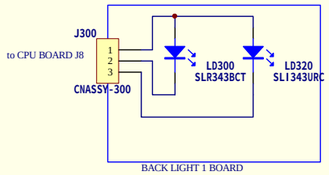

BACK LIGHT 1 BOARD

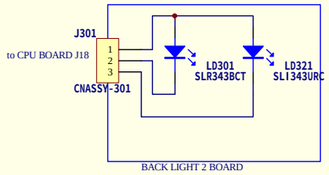

BACK LIGHT 2 BOARD

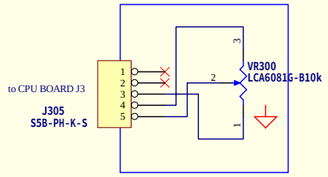

LF.A BOARD

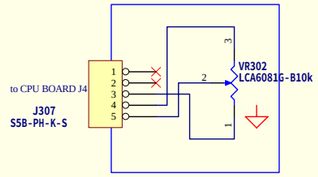

LF.B BOARD

to CPU BOARD J5

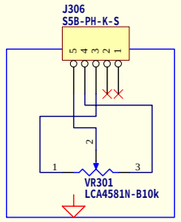

CROSS FADER BOARD

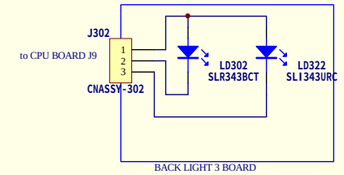

BACK LIGHT 3 BOARD

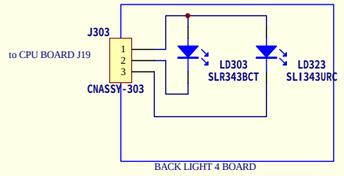

BACK LIGHT 4 BOARD

TRANSPORT_A board

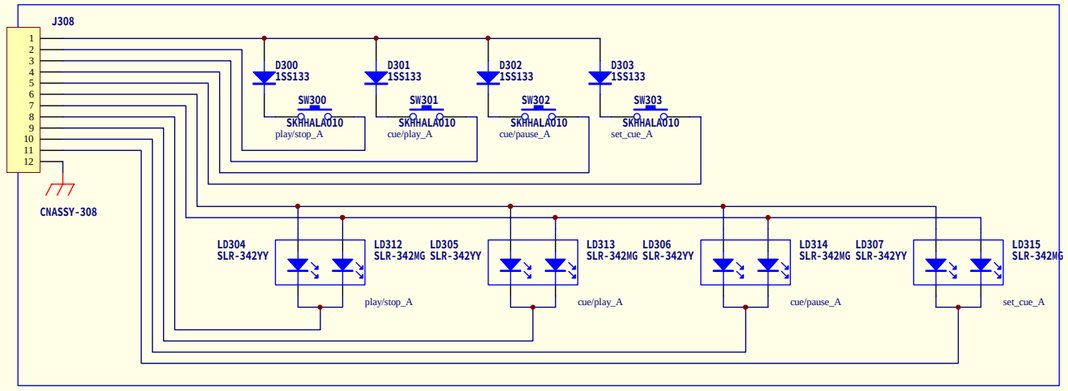

TRANSPORT_B board

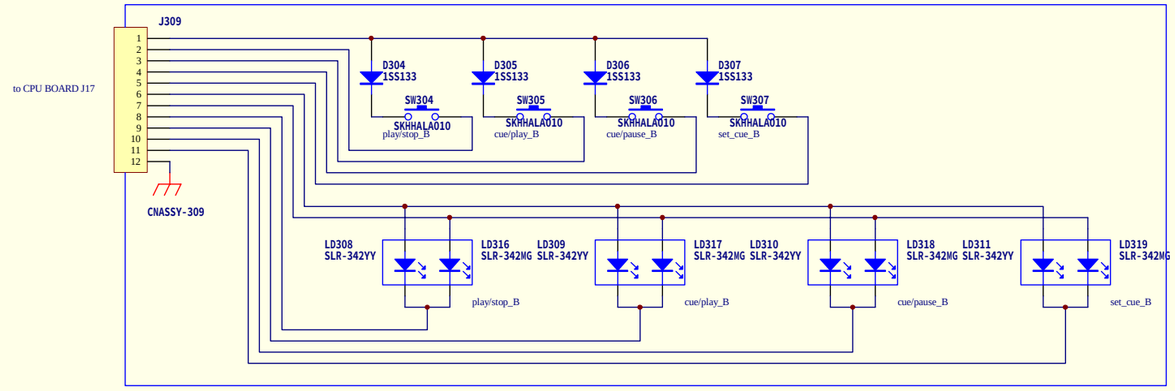

Model	VCI-100 PC controller
Sheet	OTHERS
	YANO CIRCUIT LABO
2-Mar-2007	1 / 1

VESTAX VCI-100

PARTS LIST

No		PartType	Parts Name		Discription	PCB name	Qty / PCB	TOTAL / 1unit	Parts Assign number	Brand
	pcb	**PCB BOARD**			/Material: FR-4 or CEM3 /double-sided printed wiring board , /printed resist /pcb silk		1	**1**	TOP PCB / CONT PCB / OTHER PCB (IF*2, CF*1, SW PCB for A, SW PCB for B, LED PCB*4)	VESTAX
2	elec.	CAP CERA	0,01	HE60SJYF103Z	P=5.0	TOP PCB	25	**25**	C26,27,28,29,30,31,32,33,34,35,36,37,38,39,40,41,42,43,44,45,46,47,48,49,50	mitsubishi material
1	elec.	CAP CERA	0,1	DSXC75SJYF104Z	P=5.0	CONT PCB	3	**21**	C200,201,202	mitsubishi material
1	elec.	CAP CERA	0,1	DSXC75SJYF104Z	P=5.0	TOP PCB	18		C1,2,3,4,5,6,7,8,9,10,11,12,13,14,15,16,17,18	mitsubishi material
16	elec.	CAP CERA	10p	HE40SJSL100D	P=5.0	TOP PCB	2	**2**	C19,20	mitsubishi material
18	elec.	CAP CERA	22p	HE40SJSL220J	P=5.0	TOP PCB	2	**2**	C51,52	mitsubishi material
14	elec.	CAP Elec	10/16	(ELNA) RC2-16V100	h=7mm(4*7) /P=5	TOP PCB	2	**2**	C54,55	ELNA / nichicon
24	elec.	CAP Elec	100/16	(ELNA) RC2-16V101	h=7mm(6.3*7) /P=5	TOP PCB	4	**4**	C21,22,23,24	ELNA / nichicon
12	elec.	CAP Elec	4.7/25	(ELNA) RC2-25V4R7	h=7mm(4*7) /P=5	TOP PCB	1	**1**	C25	ELNA / nichicon
21	elec.	CAP Elec	47/16	(ELNA) RC2-16V470	h=7mm(5*7) /P=5	TOP PCB	1	**1**	C53	ELNA / nichicon
33	elec.	CONNECTOR	B12B-PH-K	B12B-PH-K	shrouded header / top entry type / P=2	TOP PCB	2	**2**	J16,17	JST
34	elec.	CONNECTOR	B14B-PH-K	B14B-PH-K	shrouded header / top entry type / P=2	TOP PCB	1	**1**	J15	JST
35	elec.	CONNECTOR	B15B-PH-K	B15B-PH-K	shrouded header / top entry type / P=2	TOP PCB	1	**1**	J14	JST
29	elec.	CONNECTOR	B2B-PH-K	B2B-PH-K	shrouded header / top entry type / P=2	TOP PCB	2	**2**	J12,13	JST
30	elec.	CONNECTOR	B3B-PH-K	B3B-PH-K	shrouded header / top entry type / P=2	TOP PCB	4	**4**	J8,9,18,19	JST
	elec.	**CONNECTOR**	**B4B-PH-K**	**B4B-PH-K**	shrouded header / top entry type / P=2	TOP PCB	2	**2**	J1,2	JST
31	elec.	CONNECTOR	B5B-PH-K	B5B-PH-K	shrouded header / top entry type / P=2	TOP PCB	3	**3**	J3,4,5	JST
32	elec.	CONNECTOR	B6B-PH-K	B6B-PH-K	shrouded header / top entry type / P=2	TOP PCB	1	**1**	J6	JST
10	elec.	CONNECTOR	S5B-PH-K-S	S5B-PH-K-S	shrouded header / top entry type / P=2	OTHER PCB	3	**3**	J305,306,307	JST
50	**elec.**	**CONNECTOR**	**B8B-PH-K**	**B8B-PH-K**	shrouded header / top entry type / P=2	TOP PCB	1	**1**	J10	JST
19	elec.	CRISTAL	24MHz	CRISTAL	DIP (P=5)	TOP PCB	1	**1**	X1	SIWARD
6	elec.	DIODE	1SR35-400	1SR35-400	DIP (P=5)	TOP PCB	1	**1**	D13	ROHM
2	elec.	DIODE	1SS133	1SS133T-72	DIP (P=5)	CONT PCB	32	**53**	D200,201,202,203,204,205,206,207,208,209,210,211,212,213,214,215,216,217,218,219,220,221,222,223,224,225,226,227,228,229,230,23	ROHM
7	elec.	DIODE	1SS133	1SS133	DIP (P=5)	TOP PCB	13		D1,3,4,5,6,7,8,14,15,16,17,18,19	ROHM
1	elec.	DIODE	1SS133	1SS133 DIP	DIP (P=5)	OTHER PCB	8		D300,301,302,303,304,305,306,307	ROHM
46	elec.	DIODE	RB201A60	RB201A60(DIP)	Schottky barrier diode	TOP PCB	3	**3**	D10,11,**20**	ROHM
23	elec.	IC	TC74HC74AP	74HC74AP	DIP14	TOP PCB	1	**1**	IC1	TOSHIBA
53	elec.	IC	TC74HC238AP	TC74HC238AP	DIP16	TOP PCB	1	**1**	IC9	TOSHIBA
40	elec.	IC	H8/3052BF	H8/HD64F3052BF	SMD	TOP PCB	1	**1**	IC3	RENESAS
42	elec.	IC	LM358N	LM358N	DIP8	TOP PCB	2	**2**	IC7,8	NS
7	elec.	IC	MC14051B	MC14051BCP	PDIP16	CONT PCB	3	**4**	IC200,201,202	microchip
43	elec.	IC	MC14051B	MC14051BCP	PDIP16	TOP PCB	1		IC4	microchip

44	elec.	IC	NJM7805F	NJM7805F	DIP TO220F-3Pin	TOP PCB	1	1	IC5	JRC
51	elec.	IC	S-80840CNYB-G	S-80840CNYB-G	DIP TO-92	TOP PCB	1	1	IC2	SEIKO INST
55	elec.	IC	USBN9604-28M	USBN9604-28M	SO	TOP PCB	1	1	IC6	NS
36	elec.	INDUCTOR	BL02RN1R3J2B	BL02RN1R3J2B	P=5.0	TOP PCB	5	5	L1,2,3,4,5	MURATA
41	elec.	JACK DC	HEC0470-01-630	HEC0470-01-630		TOP PCB	1	1	JK1	HOSIDEN
38	elec.	JACK USB	CMS1410	CMS1410	USB connector TYPE_B	TOP PCB	1	1	J11	HOSIDEN
12	elec.	LED	SLI343URC (RED)	SLI343URC	High Brightness /φ3.1	OTHER PCB	4	4	LD320,321,322,323	KingBright
13	elec.	LED	SLR343BCT (BLUE)	SLR343BCT	High Brightness / φ3.1	OTHER PCB	4	4	LD300,301,302,303	KingBright
13	elec.	LED	SLR-342DU /332DU	SLR-342DU /332DU	Standard /φ3.1	CONT PCB	7	7	LD204,206,207,209,210,212,225	KingBright
14	elec.	LED	SLR-342MG /332MG	SLR-342MG /332MG	Standard /φ3.1	CONT PCB	18	26	LD205,208,211,213,214,215,216,217,218,219,221,222,223,224,239,240,241,242	KingBright
14	elec.	LED	SLR-342MG /332MG	SLR-342MG /332MG	Standard /φ3.1	OTHER PCB	8		LD312,313,314,315,316,317,318,319	KingBright
15	elec.	LED	SLR-342VR /332VR	SLR-342VR /332VR	Standard /φ3.1	CONT PCB	13	13	LD226,227,228,229,230,231,232,233,234,235,236,237,238	KingBright
16	elec.	LED	SLR-342YY /332YY	SLR-342YY /332YY	Standard /φ3.1	CONT PCB	5	13	LD200,201,202,203,220	KingBright
15	elec.	LED	SLR-342YY /332YY	SLR-342YY /332YY	Standard /φ3.1	OTHER PCB	8		LD304,305,306,307,308,309,310,311	KingBright
	casing	SPACER LED	LED SPACER 10mm LM-10	LM-10		CONT PCB	13	13		MAC-8
	elec.	RESISTOR	0 ohm (jumper)	CFS1/4 1.5k	DIP (P=5)	TOP PCB	1	1	D12	KOA
3	elec.	RESISTOR	1.5k	CFS1/4 1.5k	DIP (P=5)	TOP PCB	3	3	R90,91,R47	KOA
25	elec.	RESISTOR	100k	CFS1/4 100k	DIP (P=5)	TOP PCB	29	29	R46,65,66,67,68,69,70,71,72,73,74,75,76,77,78,79,80,81,82,83,84,85,86,87,122,124,125,126,133	KOA
3	elec.	RESISTOR	100Ω	CFS1/4 100ohm	DIP (P=5)	CONT PCB	21	33	R200,201,202,203,204,205,206,207,208,209,210,211,212,213,214,215,216,217,218,240,241	KOA
26	elec.	RESISTOR	100Ω	CFS1/4 100ohm	DIP (P=5)	TOP PCB	12		R21,22,23,24,25,26,27,28,29,30,31,32	KOA
15	elec.	RESISTOR	10k	CFS1/4 10k	DIP (P=5)	TOP PCB	20	20	R1,2,3,4,5,6,7,8,9,10,11,12,13,14,15,16,17,18,19,20	KOA
8	elec.	RESISTOR	1k	CFS1/4 1k	DIP (P=5)	TOP PCB	16	16	R101,102,103,104,105,106,107,108,109,110,111,112,113,114,115,116,	KOA
5	elec.	RESISTOR	1M	CFS1/4 1Meg	DIP (P=5)	TOP PCB	4	4	R51,52,53,54	KOA
9	elec.	RESISTOR	2.2k	CFS1/4 2.2k	DIP (P=5)	TOP PCB	2	2	R43,44	KOA
27	elec.	RESISTOR	220Ω	CFS1/4 220ohm	DIP (P=5)	TOP PCB	2	2	R99,100	KOA
20	elec.	RESISTOR	27Ω	CFS1/4 27ohm	DIP (P=5)	TOP PCB	2	2	R48,49	KOA
13	elec.	RESISTOR	4.7k	CFS1/4 4.7k	DIP (P=5)	TOP PCB	5	5	R33,117,123,131,132	KOA
28	elec.	RESISTOR	470Ω	CFS1/4 470ohm	DIP (P=5)	TOP PCB	8	8	R118,119,120,121,127,128,129,130	KOA
22	elec.	RESISTOR	47Ω	CFS1/4 47ohm	DIP (P=5)	TOP PCB	17	17	R34,35,36,37,38,39,40,41,42,45,R92,93,94,95,96,97,98	KOA
9	elec.	SLIDE FADER	RA60D1F-220-15C1-B10K-0051	RA60 type/L=15mm / B10k / MONO	60mm(mono)	OTHER PCB	2	2	VR300,302	Taiwan Alpha Elec.

8	elec.	SLIDE FADER	RA45D1F-220-15C1-B10K-0050	RA45 type/L=15mm / B10k / MONO	45mm(mono)	OTHER PCB	1	1	VR301	Taiwan Alpha Elec.
52	elec.	SWITCH SLIDE	SV68010-0203-LV	SV68010-0203-LV	AC125V 0.3A/non-shorting /L=4.6	TOP PCB	1	1	SW1	Taiwan Alpha Elec.
11	elec.	TACT SW	SKHH**AJA**010	SKHH**AJA**010	(h=**4.3**mm) /**0.98N_type**	OTHER PCB	8	34	SW300,301,302,303,304,305,306,307	ALPS
11	elec.	TACT SW	SKHH**AJA**010	SKHH**AJA**010	(h=**4.3**mm) /**0.98N_type**	CONT PCB	26		SW200,201,202,206,207,208,209,210,211,212,213,214,215,216,217,218,219,220,223,224,226,227,228,229,230,231	ALPS
12	elec.	TACT SW	SKHH**DHA**010	SKHH**DHA**010	(h=**17**mm) /**0.98N_type**	CONT PCB	6	6	SW203,204,205,221,222,225	ALPS
54	elec.	TEST PIN	TP	HOT-2608	DIP	TOP PCB	1	1	TP1	HIROSUGI
10	elec.	TRANSISTOR	2SC1959Y	2SC1959Y(F)	DIP	TOP PCB	12	12	Q11,12,13,14,15,16,17,18,19,20,21,22	TOSHIBA
11	elec.	TRANSISTOR	2SC2655Y	2SC2655Y(F)	DIP	TOP PCB	1	1	Q1	TOSHIBA
39	elec.	TRANSISTOR	DTA114YSA	DTA114YSATP	DIP	TOP PCB	9	9	Q2,3,4,5,6,7,8,9,10	ROHM
47	elec.	VOLUME Trimmer	KVSF639A(639T / 689A) C 103	KVSF639A(639T / 689A) C 103	Trimmer **(SIDE ADJ.)** potentiometers	TOP PCB	2	2	TM1,2	KOA (ALPS discontinued)
48	elec.	VOLUME ROTARY	RK09K111-K20-C0-B103 (10kB)	RK09K111 (10kB)	LM1=20/knob type shaft	TOP PCB	1	1	VR1	ALPS
*	elec.	VOLUME SLIDE	RS45111-0620-C1-P1-B103	RS45111 c.c./ with Bracket plate / L =20mm	Standard super slide volume	CONT PCB	2	2	VR200,220	ALPS
8	elec.	VOLUME ROTARY	RK09K113-K20-C0-B103 (10KB)	RK09K113 (10KB)	LM1=20/knob type shaft	CONT PCB	3	3	VR214,217,219	ALPS
9	elec.	VOLUME ROTARY	RK09K113-K20-C1-B103 (10KB)	RK09K113 (10KB/C.C付)	LM1=20/C.C./knob type shaft	CONT PCB	2	2	VR204,209	ALPS
10	elec.	VOLUME ROTARY	RK09L114-F15-C0-B103 (10kB)	RK09L114-F15-C0-B103 (10kB)	L=15 / flat shaft	CONT PCB	6	6	VR201,206,211,213,216,218	ALPS
10	elec.	VOLUME ROTARY	RK09L114-F15-C1-B103 (10kB/C.C.)	RK09L114-F15-C1-B103 (10kB/C.C.)	L=15 / C.C./ flat shaft	CONT PCB	8	8	VR202,203,205,207,208,210,212,215	ALPS
49	elec.	FUSE / PTC resettable fuse	MF-R025	PTC resettable fuse 500mA	PTC resettable fuse 60V,40A	TOP PCB	1	1	F1	BOURNS