VESTAX

SERVICE NOTE

MODEL: CDX-15

1.EXPLODED VIEW P. 2
2.SCHEMATIC DIAGRAM P.3-P.9
3. PARTS LIST P.10-P.26
2.PCB ASSEMBLEY P. 27-P.32

Vestax Corporation Service Department

2000.07.26

EXPLODED VIEW FOR MODEL CDX-15

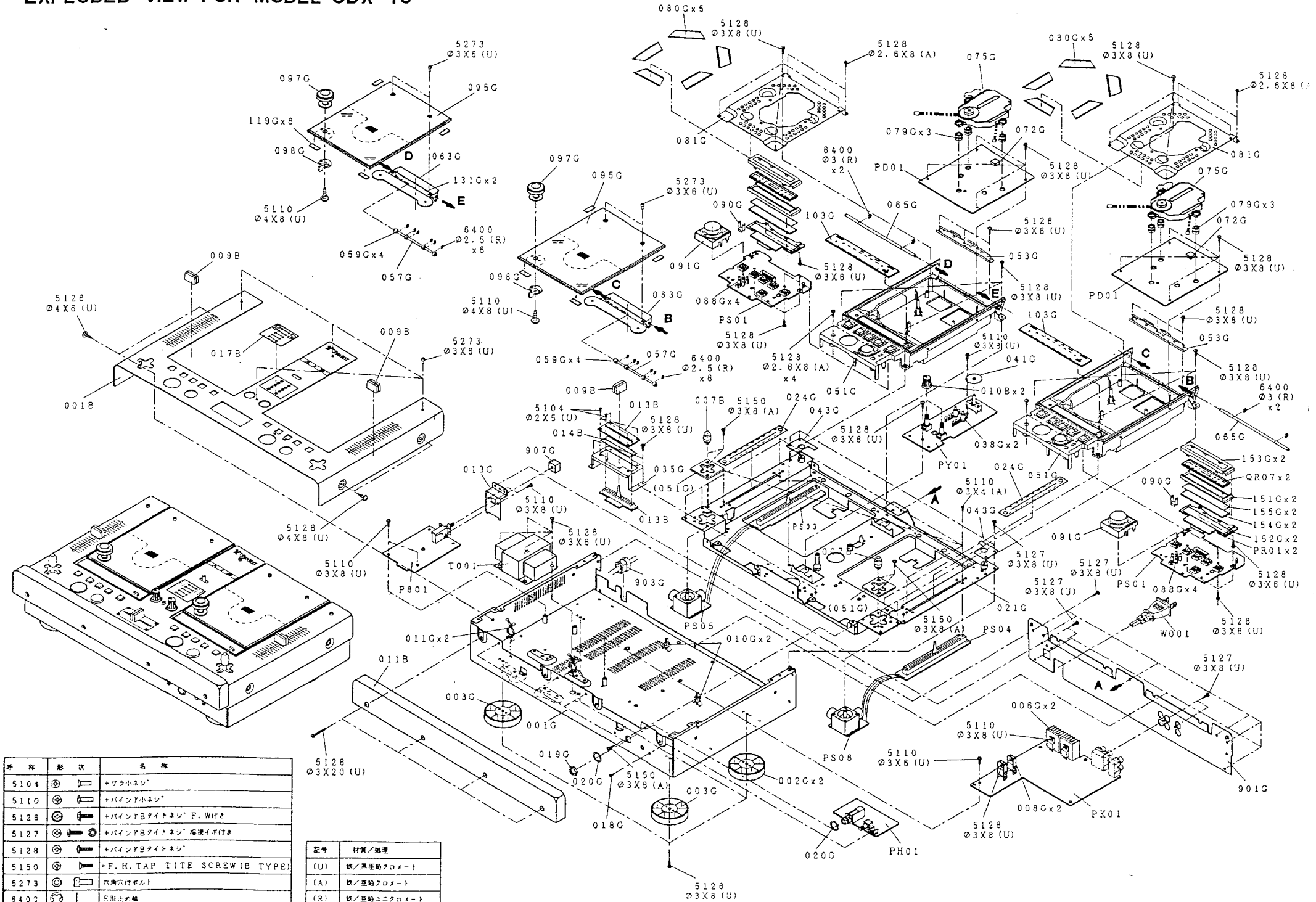

呼称	形状	名称
5104		+サラ小ネジ
5110		+バインド小ネジ
5126		+バインドBタイトネジ F.W付き
5127		+バインドBタイトネジ 溶接イボ付き
5128		+バインドBタイトネジ
5150		+F.H.TAP TITE SCREW(B TYPE)
5273		六角穴付ボルト
6400		E形止め輪

記号	材質/処理
(U)	鉄/黒亜鉛クロメート
(A)	鉄/亜鉛クロメート
(R)	鉄/亜鉛ユニクロメート

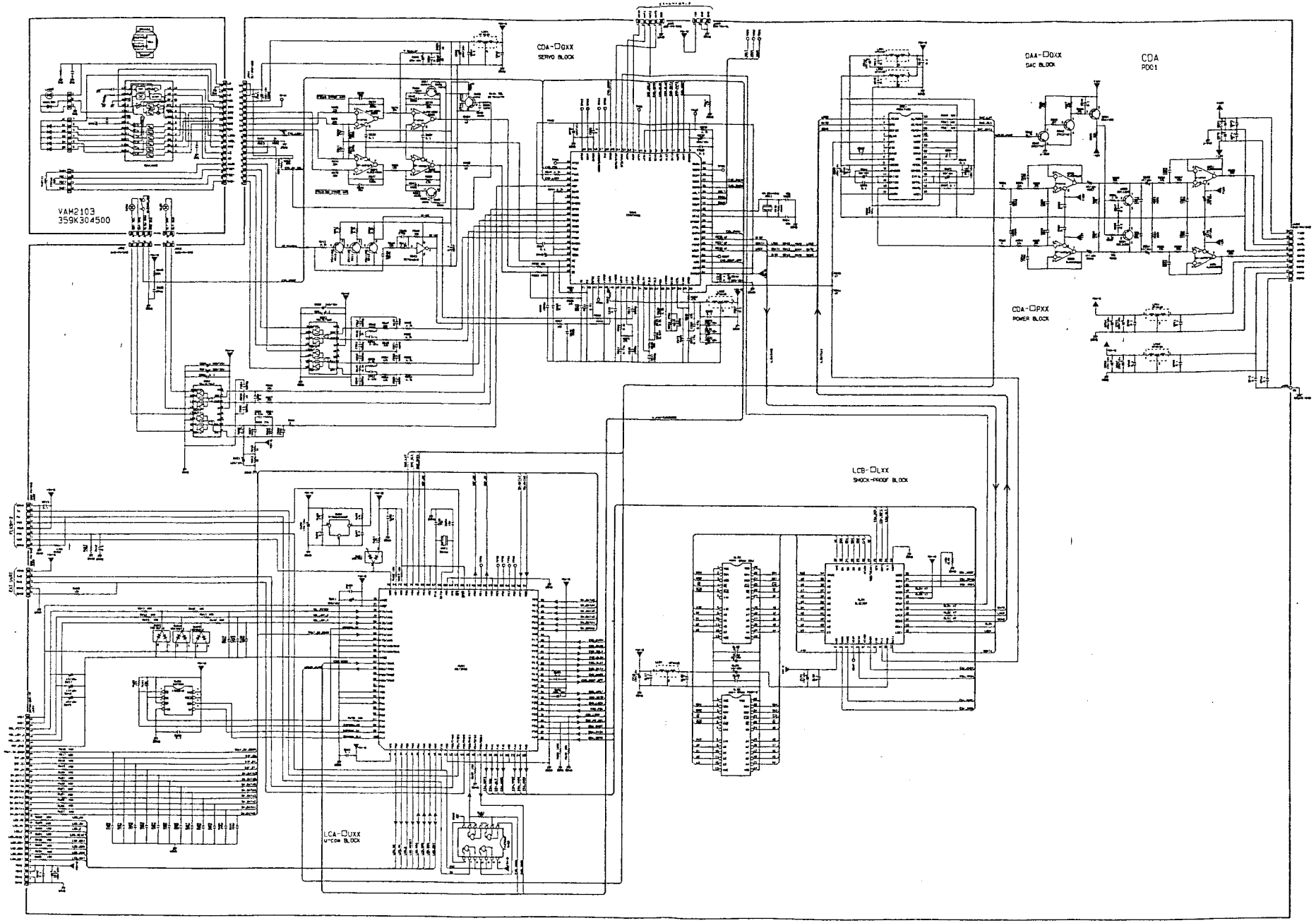

DATE: 1999-9-25

発行
技術部

452sA00.001

ORDER: 452S	MODEL: CDX-15 (1/7)	DEST:
DRAWN BY: M. Hachiya	SCHEMATIC DIAGRAM OF	
DESIGNED BY: T. Nishiyama	DATE: 99-10-19	1/1
APPROVED BY:	VESTAX CORPORATION	

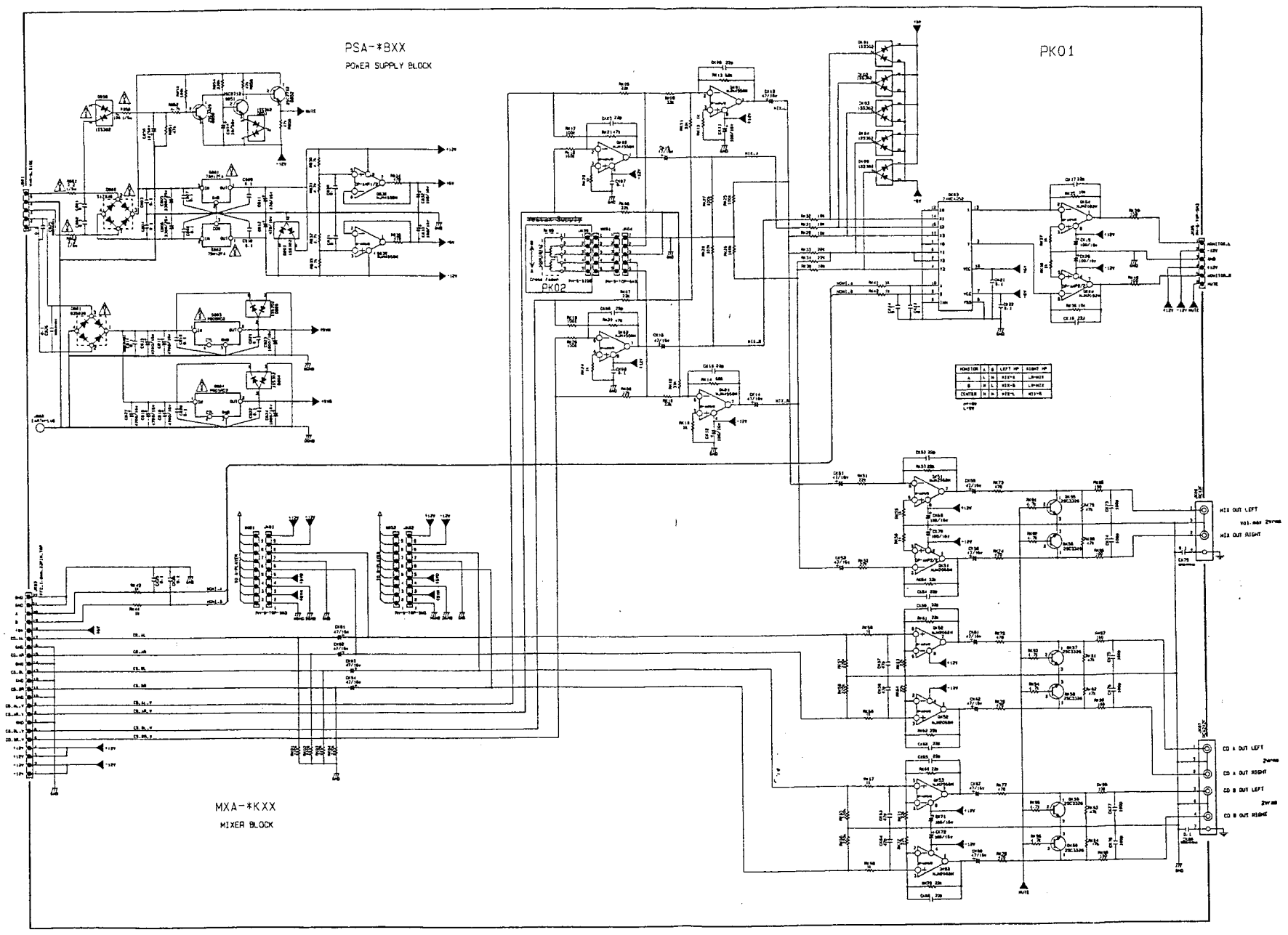

REVISIONS

DATE: 1999-9-25

発行

技術部

4525800-001

ORDER: 452S	MODEL: CDX-15	(2/7)	DEST:
DRAWN BY: M.Hachiya	SCHEMATIC DIAGRAM OF POWER SUPLY, SEL&MIX AMP.		
DESIGNED BY: T.Nishiara	DATE: 1999-10-19		1/1
APPROVED BY:	VESTAX CORPORATION		

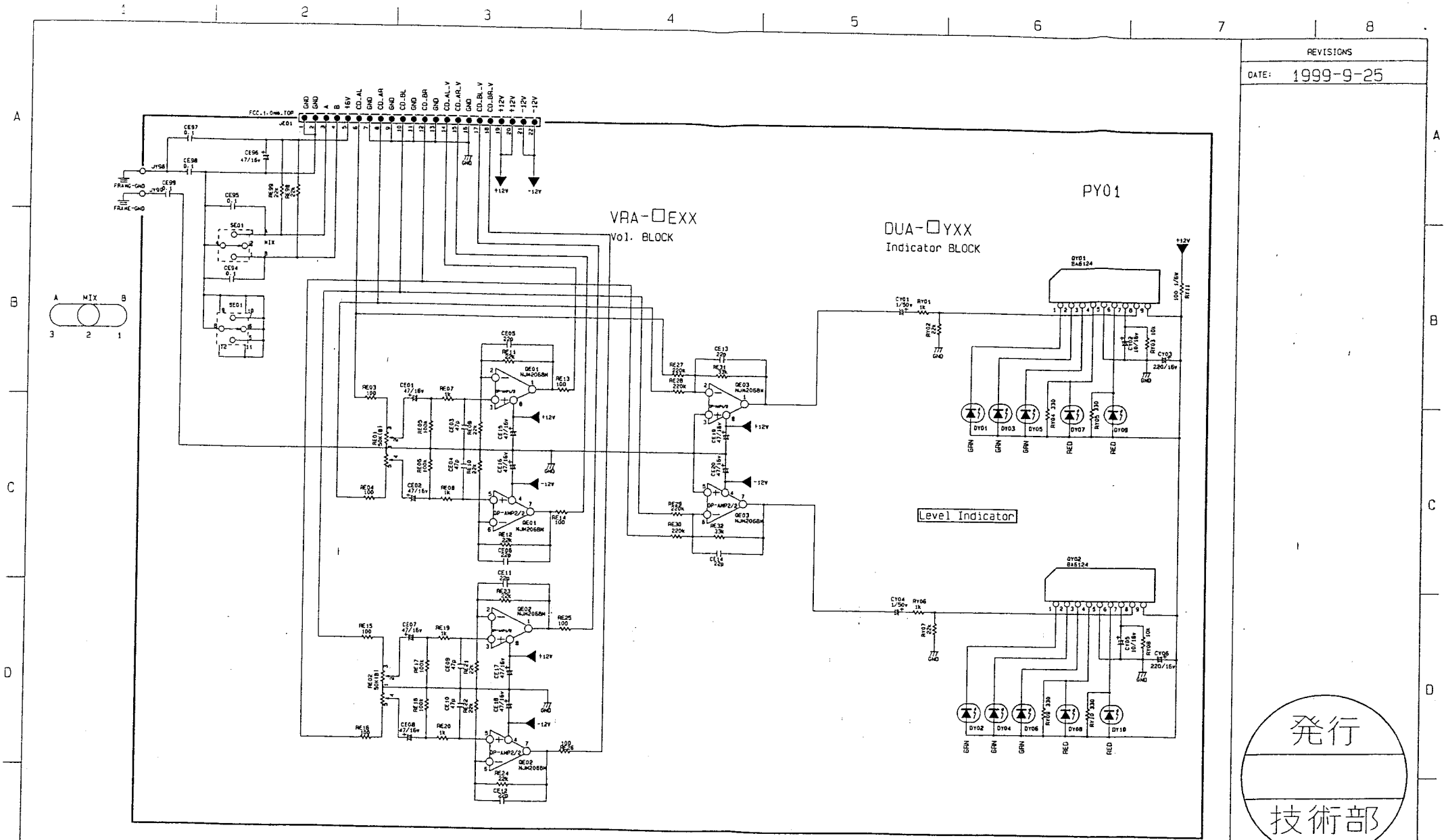

REVISIONS

DATE: 1999-9-25

発行

技術部

452sC00.001

ORDER: 452S	MODEL: CDX-15 (3/7)		DEST:
DRAWN BY: M. Hachiya	SCHEMATIC DIAGRAM OF SEL.SW.LEVEL INDICATOR		
DESIGNED BY: T. Nishiara	DATE: '99-10-19		1/1
APPROVED BY	VESTAX CORPORATION		

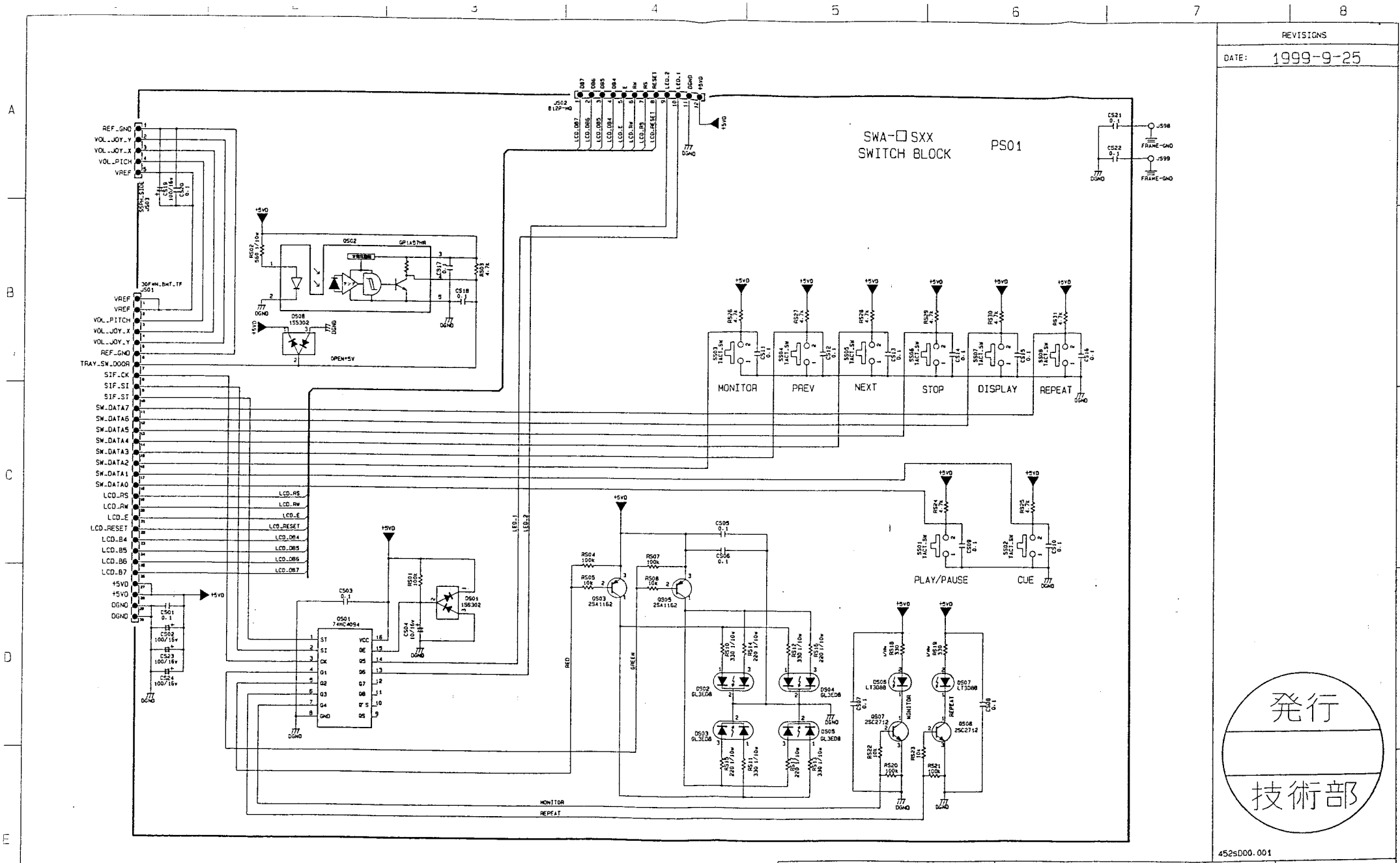
SWA-□SXX
SWITCH BLOCK
PS01
MONITOR
PREV
NEXT
STOP
DISPLAY
REPEAT
PLAY/PAUSE
CUE
REVISIONS
DATE: 1999-9-25
発行
技術部
452SD00.001
ORDER: 452S
MODEL: CDX-15 (4/7)
DEST:
DRAWN BY
M.Hachiya
SCHEMATIC DIAGRAM OF SW.LED
DESIGNED BY
T.Nishiara
DATE:
APPROVED BY
1/1
VESTA CORPORATION

REVISIONS

DATE: 1999-9-25

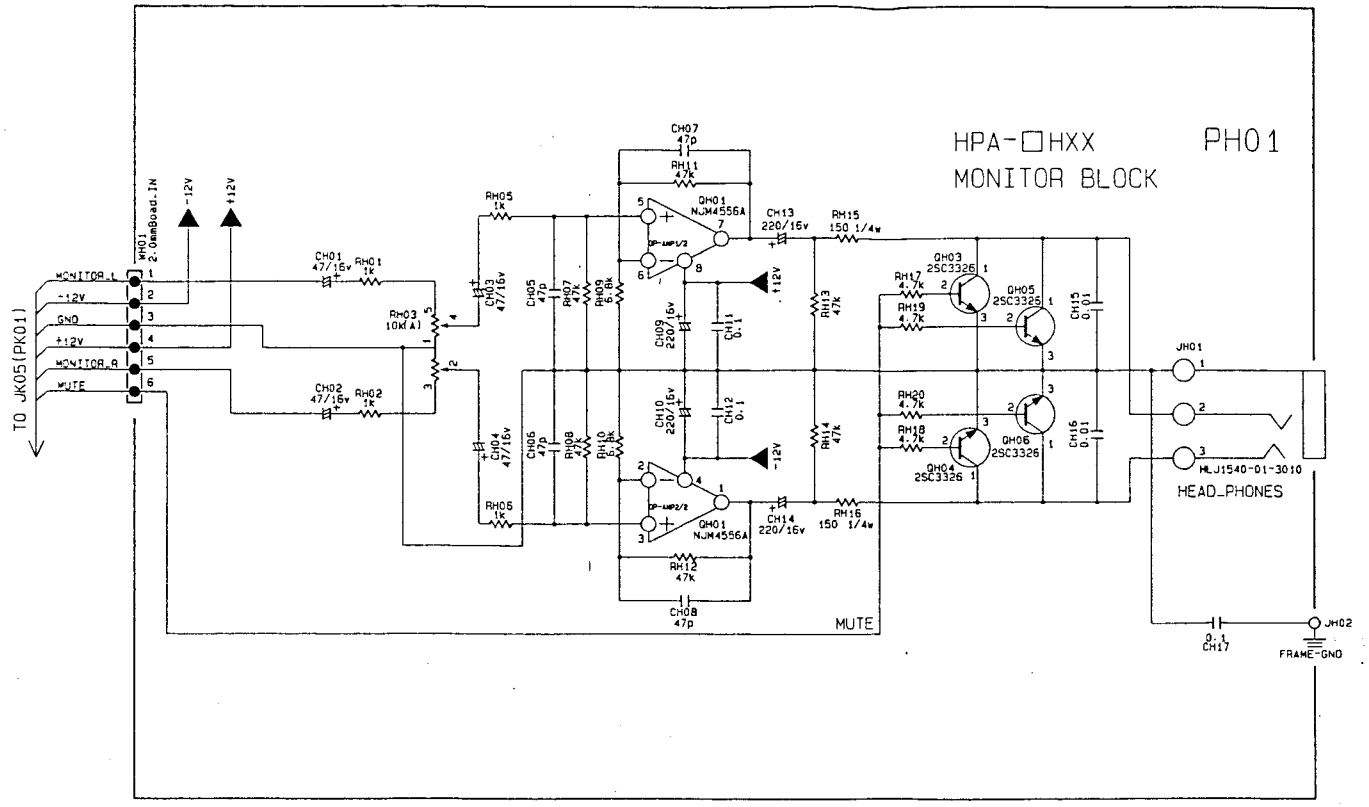

発行

技術部

452sE00.001

ORDER: 452s	MODEL: CDX-15 (5/7)		DEST:
DRAWN BY: M.Hachiya	SCHEMATIC DIAGRAM OF HEAD PHONES AMP		
DESIGNED BY: T.Nishiara	DATE: 1999-10-19		1/1
APPROVED BY	VESTAX CORPORATION		

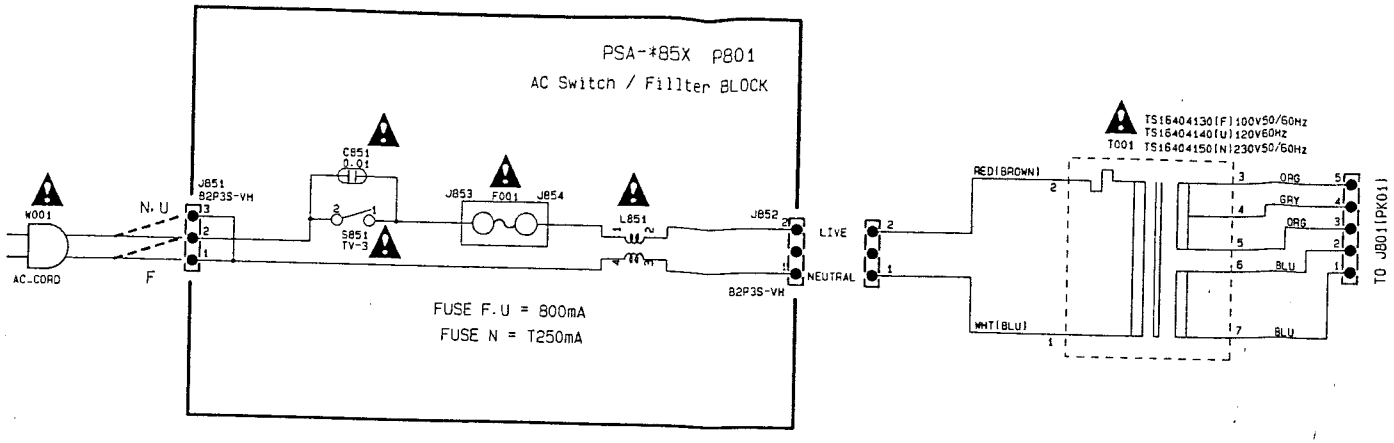

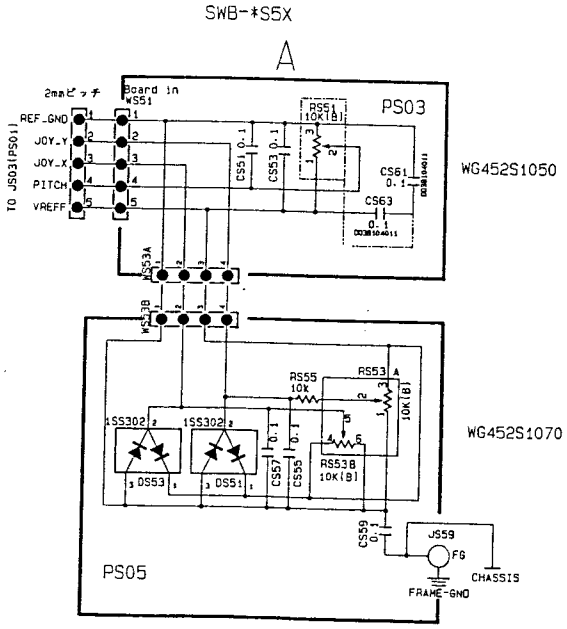

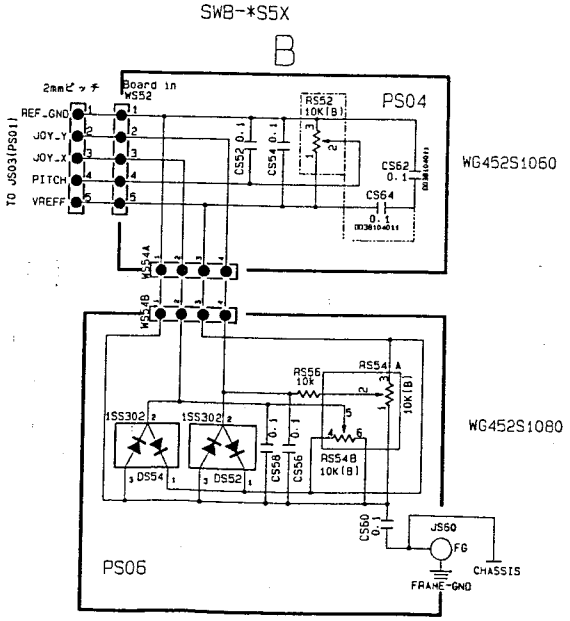

REVISIONS

DATE: 1999-9-25

発行
技術部

452sF00.001

ORDER: 452s	MODEL: CDX-15 (6/7)	DEST:	
DRAWN BY: M.Hachiya	SCHEMATIC DIAGRAM OF AC , TRANS , etc.		
DESIGNED BY: T.Nishiara	DATE: 1999-10-19		1/1
APPROVED BY	VESTAX CORPORATION		

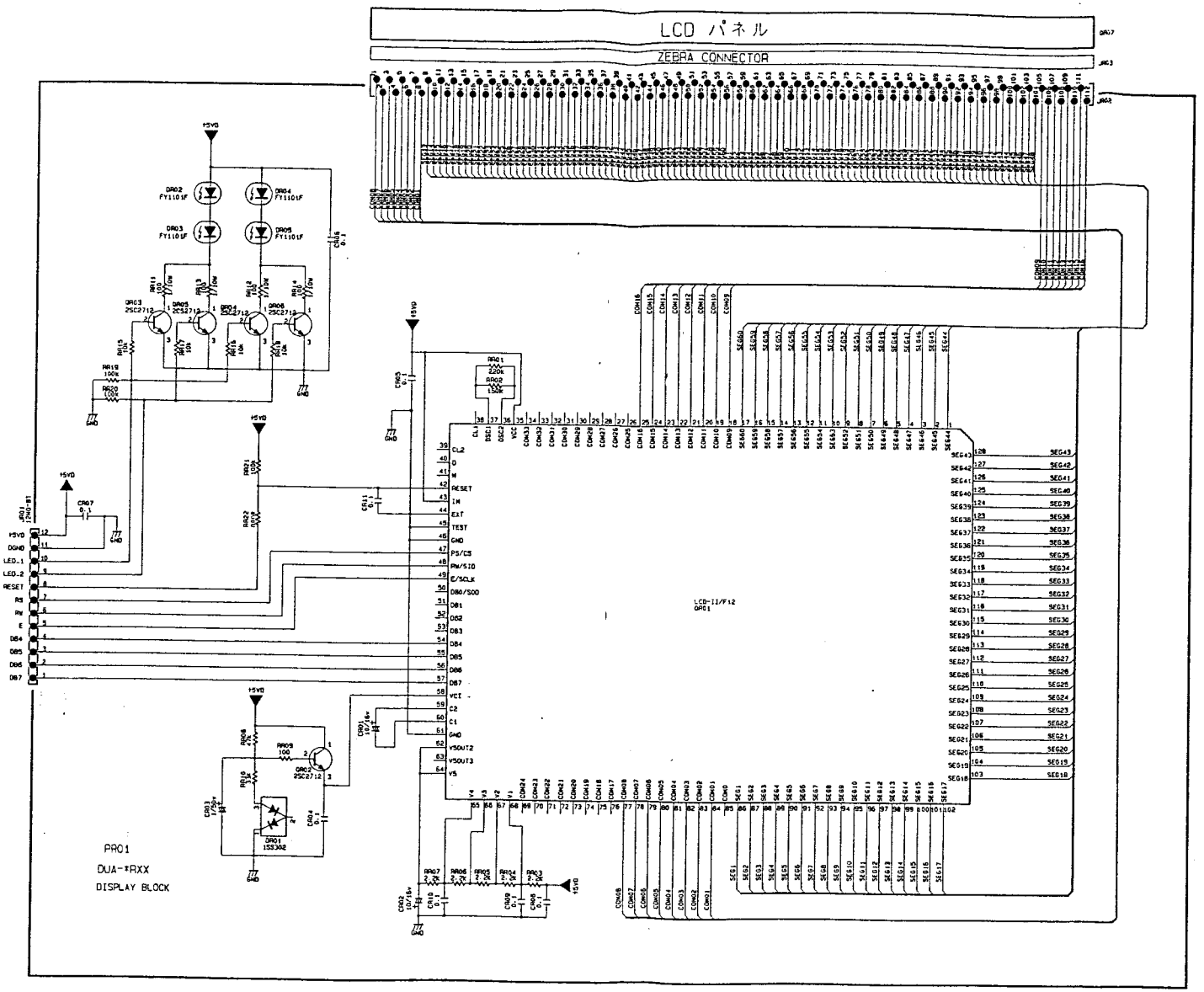

REVISIONS

DATE: 1999-9-25

発行

技術部

452SG00.001

ORDER: 452S	MODEL: CDX-15 (7/7)	DEST:
DRAWN BY: M. Hachiya	SCHEMATIC DIAGRAM OF LCD DRIVER	
DESIGNED BY: T. Nishiara	DATE: '99-10-19	1/1
APPROVED BY:	VESTAX CORPORATION	

SYMBOL#	PARTS NAME	PCB	DESCRIPTION	BRAND
AAA AA01	SCHEMATIC DIAG.		SCHEMATIC DIAGRAM OF CD SERVO	
AAA AA02	SCHEMATIC DIAG.		SCHEMATIC DIAGRAM OF MIXER	
AAA AA03	SCHEMATIC DIAG.		SCHEMATIC DIAGRAM OF LEVEL MET	
AAA AA04	SCHEMATIC DIAG.		SCHEMATIC DIAGRAM OF SWITCH	
AAA AA05	SCHEMATIC DIAG.		SCHEMATIC DIAGRAM OF HEADPHONE	
AAA AA06	SCHEMATIC DIAG.		SCHEMATIC DIAGRAM OF FUNCTIONS	
AAA AA07	SCHEMATIC DIAG.		SCHEMATIC DIAGRAM OF LCD DISPL	
AAA AA51			SPECIFICATIONS FOR CDX-15	
AAA AA61			ADJUTMENT METHOD REV.02	
AAA AA71			PKG DGM FOR LABEL	
AAA AA72			PKG DGM FOR PALET	
AAA AA73			PKG DGM FOR PKG CASE	
AAA AA74			PKG DGM MASTERCARTON	
A00 F851	FUSE		# 800MA 250V UL,CSA,MITI FBM	
A00 F851	FUSE		# 800MA 250V UL,CSA,MITI FBM	
A00 F851	FUSE		# 800MA 250V UL,CSA,MITI FBM	
A00 F851	FUSE		# 250MA 250V BS LISTED	
A00 F851	FUSE		# 250MA 250V BS LISTED	
A00 F851	FUSE		# 250MA 250V BS LISTED	
A00 F851	FUSE		# 800MA 250V UL,CSA,MITI FBM	
A00 F851	FUSE		# 800MA 250V UL,CSA,MITI FBM	
A00 F851	FUSE		# 800MA 250V UL,CSA,MITI FBM	
A00 PD01	P.W.BOARD	PD01	CD PCB	
A00 PH01	P.W.BOARD	PH01	HAEDPHONES AMP PCB	
A00 PK01	P.W.BOARD	PK01	POWER SUPLLY MIXER PCB	
A00 PK99	P.W.BOARD	PK99	CROSS FADER PCB	
A00 PR01	P.W.BOARD	PR01	LCD DISPLAY PCB	
A00 PS01	P.W.BOARD	PS01	SWITCH PCB	
A00 PS03	P.W.BOARD	PS03	A-PLAYER 100MM FADER PCB	
A00 PS04	P.W.BOARD	PS04	B-PLAYER 100MM FADER PCB	
A00 PS05	P.W.BOARD	PS05	A-PLAYER JOY STICK PCB	
A00 PS06	P.W.BOARD	PS06	B-PLAYER JOY STICK PCB	
A00 PY01	P.W.BOARD	PY01	LED LEVEL METER PCB	
A00 P001	P.W.BOARD	P001	CD MOTHER PCB	
A00 P002	P.W.BOARD	P002	FUNCTION MOTHER PCB	
A00 P801	P.W.BOARD	P801	! AC POWER SWITCH PCB	
A00 T001	POWER TRANSF.		# KS6435 AC100V 50/60HZ	
A00 T001	POWER TRANSF.		# KS6435 AC100V 50/60HZ	
A00 T001	POWER TRANSF.		# KS6435 AC100V 50X60HZ	
A00 T001	POWER TRANSF.		# KS6435 AC230V 50/60HZ	
A00 T001	POWER TRANSF.		# KS6435 AC230V 50/60HZ	
A00 T001	POWER TRANSF.		# KS6435 230V 50X60HZ	
A00 T001	POWER TRANSF.		# KS6435 AC120V 60HZ	
A00 T001	POWER TRANSF.		# KS6435 AC120V 60HZ	
A00 T001	POWER TRANSF.		# KS6435 120V 60HZ	
A00 WK01	CONNECTIVE CORD		PHR-5 UL2851 AWG30 SHIELD(BLK)	
A00 W001	A.C POWER CORD		# AC CORD F OR E (MAYOR)	
A00 W001	A.C POWER CORD		# AC CORD F OR E (MAYOR)	
A00 W001	A.C POWER CORD		# AC CORD F OR E (MAYOR)	
A00 W001	A.C POWER CORD		# AC CORD N (MAYOR)	
A00 W001	A.C POWER CORD		# AC CORD N (MAYOR)	
A00 W001	A.C POWER CORD		# AC CORD N (MAYOR)	
A00 W001	A.C POWER CORD		# UL/CSA AC CORD NON-INTEGRAL	

SYMBOL#	PARTS NAME	PCB	DESCRIPTION	BRAND
CDA CQ37	CERAMIC CAP.	PD01	0.1UF	
CDA CQ38	CERAMIC CAP.	PD01	15PF +- 5%	
CDA CQ39	CERAMIC CAP.	PD01	15PF +- 5%	
CDA CQ40	CERAMIC CAP.	PD01	15PF +- 5%	
CDA CQ41	CERAMIC CAP.	PD01	15PF +- 5%	
CDA CQ42	CERAMIC CAP.	PD01	220PF +- 5%	
CDA CQ43	CERAMIC CAP.	PD01	100PF +- 5%	
CDA CQ46	CERAMIC CAP.	PD01	3300PF +- 10%	
CDA CQ47	CERAMIC CAP.	PD01	0.1UF	
CDA CQ48	CERAMIC CAP.	PD01	270PF +- 5%	
CDA CQ50	TANTL.CAP CHIP	PD01	100UF/ 10V	
CDA CQ51	CERAMIC CAP.	PD01	0.1UF	
CDA CQ52	CERAMIC CAP.	PD01	5600PF +- 10%	
CDA CQ53	CERAMIC CAP.	PD01	5600PF +- 10%	
CDA CQ54	CERAMIC CAP.	PD01	0.47UF/ +-10% 16V B	
CDA CQ55	CERAMIC CAP.	PD01	5600PF +- 10%	
CDA CQ56	CERAMIC CAP.	PD01	5600PF +- 10%	
CDA CQ57	CERAMIC CAP.	PD01	0.47UF/ +-10% 16V B	
CDA CQ60	TANTL.CAP CHIP	PD01	100UF/ 10V	
CDA CQ61	TANTL.CAP CHIP	PD01	100UF/ 10V	
CDA CQ62	CERAMIC CAP.	PD01	0.1UF	
CDA CQ63	TANTL.CAP CHIP	PD01	100UF/ 10V	
CDA CQ64	CERAMIC CAP.	PD01	5600PF +- 10%	
CDA CQ65	CERAMIC CAP.	PD01	5600PF +- 10%	
CDA CQ66	CERAMIC CAP.	PD01	0.1UF	
CDA CQ69	CERAMIC CAP.	PD01	0.01UF +- 10%	
CDA CQ72	CERAMIC CAP.	PD01	100PF +- 5%	
CDA JQ01	JACK	PD01	18 PIN IL-402-18S-S1L-SA-E1000	
CDA JQ02	JACK	PD01	B4B-PH-SM3-TB	
CDA JQ03	JACK	PD01	B2B-PH-SM3-TB	
CDA LP01	EMI FILTER	PD01	NFM61R10T102 1000PF +80%,-20%	
CDA LP02	EMI FILTER	PD01	NFM61R10T102 1000PF +80%,-20%	
CDA LQ01	EMI FILTER	PD01	NFM61R10T102 1000PF +80%,-20%	
CDA LQ02	EMI FILTER	PD01	NFM61R10T102 1000PF +80%,-20%	
CDA QQ01	IC	PD01	CXD2585Q CD DECODER SONY	
CDA QQ03	IC	PD01	TDA7073AT SOP DUAL BTL DRIVER	
CDA QQ04	IC	PD01	TDA7073AT SOP DUAL BTL DRIVER	
CDA QQ05	IC	PD01	NJM2100M JRC	
CDA QQ06	IC	PD01	NJM2100M JRC	
CDA QQ10	CHIP TR. (2SA)	PD01	2SA1162 0,Y	
CDA QQ11	CHIP TR. (2SA)	PD01	2SA1162 0,Y	
CDA QQ12	CHIP TR. (2SA)	PD01	2SA1162 0,Y	
CDA QQ13	IC	PD01	TC7SHU04F 1PACK 1NV (TAPING)	
CDA RQ01	CHIP RESISTOR	PD01	1K OHM +- 5% 1/16W	
CDA RQ02	CHIP RESISTOR	PD01	1K OHM +- 5% 1/16W	
CDA RQ05	CHIP RESISTOR	PD01	1K OHM +- 5% 1/16W	
CDA RQ06	CHIP RESISTOR	PD01	1K OHM +- 5% 1/16W	
CDA RQ07	CHIP RESISTOR	PD01	3.3K OHM +- 5% 1/16W	
CDA RQ08	CHIP RESISTOR	PD01	3.3K OHM +- 5% 1/16W	
CDA RQ09	CHIP RESISTOR	PD01	3.3K OHM +- 5% 1/16W	
CDA RQ10	CHIP RESISTOR	PD01	10K OHM +- 5% 1/16W	
CDA RQ11	CHIP RESISTOR	PD01	1.5K OHM +- 5% 1/16W	
CDA RQ12	CHIP RESISTOR	PD01	15K OHM +- 5% 1/16W	

SYMBOL#	PARTS NAME	PCB	DESCRIPTION	BRAND
CDA RQ79	CHIP RESISTOR	PD01	15K OHM +- 5% 1/16W	
CDA RQ81	CHIP RESISTOR	PD01	10K OHM +- 5% 1/16W	
CDA RQ82	CHIP RESISTOR	PD01	27K OHM +- 5% 1/16W	
CDA RQ84	CHIP RESISTOR	PD01	47 OHM +- 5% 1/16W	
CDA RQ85	CHIP RESISTOR	PD01	47 OHM +- 5% 1/16W	
CDA RQ88	CHIP RESISTOR	PD01	0 OHM +- 5% 1/16W	
CDA XQ01	CRYSTAL	PD01	CM309S 16-9344MHZ	
DAA CD01	CERAMIC CAP.	PD01	0.1UF	
DAA CD02	CERAMIC CAP.	PD01	0.1UF	
DAA CD03	TANTL.CAP CHIP	PD01	10UF/ 16V	
DAA CD04	TANTL.CAP CHIP	PD01	10UF/ 16V	
DAA CD05	CERAMIC CAP.	PD01	0.1UF	
DAA CD06	CERAMIC CAP.	PD01	0.1UF	
DAA CD07	TANTL.CAP CHIP	PD01	100UF/ 10V	
DAA CD08	TANTL.CAP CHIP	PD01	100UF/ 10V	
DAA CD09	CERAMIC CAP.	PD01	0.1UF	
DAA CD10	CERAMIC CAP.	PD01	0.1UF	
DAA CD12	CERAMIC CAP.	PD01	0.1UF	
DAA CD13	CERAMIC CAP.	PD01	0.1UF	
DAA CD14	TANTL.CAP CHIP	PD01	10UF/ 16V	
DAA CD15	CERAMIC CAP.	PD01	0.1UF	
DAA CD16	CERAMIC CAP.	PD01	0.1UF	
DAA CD17	CERAMIC CAP.	PD01	0.1UF	
DAA CD18	CERAMIC CAP.	PD01	0.1UF	
DAA CD53	CERAMIC CAP.	PD01	150PF +- 5%	
DAA CD54	CERAMIC CAP.	PD01	150PF +- 5%	
DAA CD55	CERAMIC CAP.	PD01	82PF +- 5%	
DAA CD56	CERAMIC CAP.	PD01	82PF +- 5%	
DAA CD57	TANTL.CAP CHIP	PD01	47UF/ 16V	
DAA CD58	TANTL.CAP CHIP	PD01	47UF/ 16V	
DAA CD59	CERAMIC CAP.	PD01	0.1UF	
DAA CD60	CERAMIC CAP.	PD01	0.1UF	
DAA CD61	CERAMIC CAP.	PD01	270PF +- 5%	
DAA CD62	CERAMIC CAP.	PD01	270PF +- 5%	
DAA CD63	TANTL.CAP CHIP	PD01	47UF/ 16V	
DAA CD64	TANTL.CAP CHIP	PD01	47UF/ 16V	
DAA CD65	CERAMIC CAP.	PD01	680PF +- 10%	
DAA CD66	CERAMIC CAP.	PD01	680PF +- 10%	
DAA CD67	CERAMIC CAP.	PD01	150PF +- 5%	
DAA CD68	CERAMIC CAP.	PD01	150PF +- 5%	
DAA CD69	TANTL.CAP CHIP	PD01	47UF/ 16V	
DAA CD70	TANTL.CAP CHIP	PD01	47UF/ 16V	
DAA CD71	TANTL.CAP CHIP	PD01	100UF/ 16V	
DAA CD72	TANTL.CAP CHIP	PD01	100UF/ 16V	
DAA CD73	CERAMIC CAP.	PD01	0.1UF	
DAA CD74	CERAMIC CAP.	PD01	0.1UF	
DAA LD01	EMI FILTER	PD01	NFM41P11C204	
DAA LD02	EMI FILTER	PD01	NFM41P11C204	
DAA QD01	IC	PD01	PCM1710U 16/20BIT DAC B.B SOP	
DAA QD02	CHIP TR. (2SC)	PD01	2SC2712 BL	
DAA QD03	CHIP TR. (2SC)	PD01	2SC2712 BL	
DAA QD04	CHIP TR. (2SA)	PD01	2SA1162 O,Y	
DAA QD50	IC	PD01	NJM2068M TAPING	

SYMBOL#	PARTS NAME	PCB	DESCRIPTION	BRAND
DAA QD51	IC	PD01	NJM2068M TAPING	
DAA QD53	CHIP TR. (2SC)	PD01	2SC3326 A CHIP TAPING	
DAA QD54	CHIP TR. (2SC)	PD01	2SC3326 A CHIP TAPING	
DAA RD01	CHIP RESISTOR	PD01	100 OHM +- 5% 1/16W	
DAA RD02	CHIP RESISTOR	PD01	100 OHM +- 5% 1/16W	
DAA RD03	CHIP RESISTOR	PD01	100 OHM +- 5% 1/16W	
DAA RD04	CHIP RESISTOR	PD01	4.7K OHM +- 5% 1/16W	
DAA RD05	CHIP RESISTOR	PD01	22K OHM +- 5% 1/16W	
DAA RD06	CHIP RESISTOR	PD01	100 OHM +- 5% 1/16W	
DAA RD07	CHIP RESISTOR	PD01	22K OHM +- 5% 1/16W	
DAA RD08	CHIP RESISTOR	PD01	10K OHM +- 5% 1/16W	
DAA RD09	CHIP RESISTOR	PD01	22K OHM +- 5% 1/16W	
DAA RD10	CHIP RESISTOR	PD01	47 OHM +- 5% 1/16W	
DAA RD11	CHIP RESISTOR	PD01	47 OHM +- 5% 1/16W	
DAA RD51	CHIP RESISTOR	PD01	0 OHM +- 5% 1/16W	
DAA RD52	CHIP RESISTOR	PD01	0 OHM +- 5% 1/16W	
DAA RD53	CHIP RESISTOR	PD01	33K OHM +- 5% 1/16W	
DAA RD54	CHIP RESISTOR	PD01	33K OHM +- 5% 1/16W	
DAA RD55	CHIP RESISTOR	PD01	33K OHM +- 5% 1/16W	
DAA RD56	CHIP RESISTOR	PD01	33K OHM +- 5% 1/16W	
DAA RD57	CHIP RESISTOR	PD01	47K OHM +- 5% 1/16W	
DAA RD58	CHIP RESISTOR	PD01	47K OHM +- 5% 1/16W	
DAA RD59	CHIP RESISTOR	PD01	10K OHM +- 5% 1/16W	
DAA RD60	CHIP RESISTOR	PD01	10K OHM +- 5% 1/16W	
DAA RD61	CHIP RESISTOR	PD01	4.7K OHM +- 5% 1/16W	
DAA RD62	CHIP RESISTOR	PD01	4.7K OHM +- 5% 1/16W	
DAA RD63	CHIP RESISTOR	PD01	100K OHM +- 5% 1/16W	
DAA RD64	CHIP RESISTOR	PD01	100K OHM +- 5% 1/16W	
DAA RD65	CHIP RESISTOR	PD01	10K OHM +- 5% 1/16W	
DAA RD66	CHIP RESISTOR	PD01	10K OHM +- 5% 1/16W	
DAA RD67	CHIP RESISTOR	PD01	10K OHM +- 5% 1/16W	
DAA RD68	CHIP RESISTOR	PD01	10K OHM +- 5% 1/16W	
DAA RD69	CHIP RESISTOR	PD01	100 OHM +- 5% 1/16W	
DAA RD70	CHIP RESISTOR	PD01	100 OHM +- 5% 1/16W	
DUA CR01	TANTL.CAP CHIP	PR01	10UF/ 16V	
DUA CR02	TANTL.CAP CHIP	PR01	10UF/ 16V	
DUA CR03	TANTL.CAP CHIP	PR01	1UF/ 50V	
DUA CR04	CERAMIC CAP.	PR01	0.1UF	
DUA CR05	CERAMIC CAP.	PR01	0.1UF	
DUA CR06	CERAMIC CAP.	PR01	0.1UF	
DUA CR07	CERAMIC CAP.	PR01	0.1UF	
DUA CR08	CERAMIC CAP.	PR01	0.1UF	
DUA CR09	CERAMIC CAP.	PR01	0.1UF	
DUA CR10	CERAMIC CAP.	PR01	0.1UF	
DUA CR11	CERAMIC CAP.	PR01	0.1UF	
DUA CY01	ELECT CAP.	PY01	1UF/ 50V	
DUA CY02	ELECT CAP.	PY01	10UF/ 16V	
DUA CY03	ELECT CAP.	PY01	220UF/ 16V	
DUA CY04	ELECT CAP.	PY01	1UF/ 50V	
DUA CY05	ELECT CAP.	PY01	10UF/ 16V	
DUA CY06	ELECT CAP.	PY01	220UF/ 16V	
DUA DR01	CHIP DIODE	PR01	1SS302 (TOSHIBA)	
DUA DR02	L.E.D.	PR01	FY1101F-TX CHIP LED YELLOW	

SYMBOL#	PARTS NAME	PCB	DESCRIPTION	BRAND
DUA DR03	L.E.D.	PR01	FY1101F-TX CHIP LED YELLOW	
DUA DR04	L.E.D.	PR01	FY1101F-TX CHIP LED YELLOW	
DUA DR05	L.E.D.	PR01	FY1101F-TX CHIP LED YELLOW	
DUA DY01	L.E.D.	PY01	LT3E8D O3LED GREEN D-FORMING	
DUA DY02	L.E.D.	PY01	LT3E8D O3LED GREEN D-FORMING	
DUA DY03	L.E.D.	PY01	LT3E8D O3LED GREEN D-FORMING	
DUA DY04	L.E.D.	PY01	LT3E8D O3LED GREEN D-FORMING	
DUA DY05	L.E.D.	PY01	LT3E8D O3LED GREEN D-FORMING	
DUA DY06	L.E.D.	PY01	LT3E8D O3LED GREEN D-FORMING	
DUA DY07	L.E.D.	PY01	LT3D8B RED 3O	
DUA DY08	L.E.D.	PY01	LT3D8B RED 3O	
DUA DY09	L.E.D.	PY01	LT3D8B RED 3O	
DUA DY10	L.E.D.	PY01	LT3D8B RED 3O	
DUA JR01	JACK	PR01	12MQ-BT FOR LCD-PCB	
DUA JR03	JUMPER LEAD		ZEBRA CONNECTOR FOR CDX-15	
DUA JY98	TERMINAL	PY01	GND TERMINAL FOR PCB	
DUA JY99	TERMINAL	PY01	GND TERMINAL FOR PCB	
DUA QR01	IC	PR01	HD66712SA02FS LCD DRIV HITACHI	
DUA QR02	CHIP TR. (2SC)	PR01	2SC2712 BL	
DUA QR03	CHIP TR. (2SC)	PR01	2SC2712 BL	
DUA QR04	CHIP TR. (2SC)	PR01	2SC2712 BL	
DUA QR05	CHIP TR. (2SC)	PR01	2SC2712 BL	
DUA QR06	CHIP TR. (2SC)	PR01	2SC2712 BL	
DUA QR07	DISPLAY UNIT		LCD FOR CDX-15 HOSHIDEN	
DUA QY01	IC	PY01	5POINTO LED VU METER IC	
DUA QY02	IC	PY01	5POINTO LED VU METER IC	
DUA RR01	CHIP RESISTOR	PR01	220K OHM +- 5% 1/16W	
DUA RR02	CHIP RESISTOR	PR01	150K OHM +- 5% 1/16W	
DUA RR03	CHIP RESISTOR	PR01	2.2K OHM +- 5% 1/16W	
DUA RR04	CHIP RESISTOR	PR01	2.2K OHM +- 5% 1/16W	
DUA RR05	CHIP RESISTOR	PR01	2.2K OHM +- 5% 1/16W	
DUA RR06	CHIP RESISTOR	PR01	2.2K OHM +- 5% 1/16W	
DUA RR07	CHIP RESISTOR	PR01	2.2K OHM +- 5% 1/16W	
DUA RR08	CHIP RESISTOR	PR01	47K OHM +- 5% 1/16W	
DUA RR09	CHIP RESISTOR	PR01	100 OHM +- 5% 1/16W	
DUA RR10	CHIP RESISTOR	PR01	33K OHM +- 5% 1/16W	
DUA RR11	CHIP RESISTOR	PR01	100 OHM +- 5% 1/10W	
DUA RR12	CHIP RESISTOR	PR01	100 OHM +- 5% 1/10W	
DUA RR13	CHIP RESISTOR	PR01	100 OHM +- 5% 1/10W	
DUA RR14	CHIP RESISTOR	PR01	100 OHM +- 5% 1/10W	
DUA RR15	CHIP RESISTOR	PR01	10K OHM +- 5% 1/16W	
DUA RR16	CHIP RESISTOR	PR01	10K OHM +- 5% 1/16W	
DUA RR17	CHIP RESISTOR	PR01	10K OHM +- 5% 1/16W	
DUA RR18	CHIP RESISTOR	PR01	10K OHM +- 5% 1/16W	
DUA RR19	CHIP RESISTOR	PR01	100K OHM +- 5% 1/16W	
DUA RR20	CHIP RESISTOR	PR01	100K OHM +- 5% 1/16W	
DUA RR21	CHIP RESISTOR	PR01	100K OHM +- 5% 1/16W	
DUA RY01	CHIP RESISTOR	PY01	1K OHM +- 5% 1/16W	
DUA RY02	CHIP RESISTOR	PY01	22K OHM +- 5% 1/16W	
DUA RY03	CHIP RESISTOR	PY01	10K OHM +- 5% 1/16W	
DUA RY04	CHIP RESISTOR	PY01	330 OHM +- 5% 1/16W	
DUA RY05	CHIP RESISTOR	PY01	330 OHM +- 5% 1/16W	
DUA RY06	CHIP RESISTOR	PY01	1K OHM +- 5% 1/16W	

SYMBOL#	PARTS NAME	PCB	DESCRIPTION	BRAND
DUA RY07	CHIP RESISTOR	PY01	22K OHM +- 5% 1/16W	
DUA RY08	CHIP RESISTOR	PY01	10K OHM +- 5% 1/16W	
DUA RY09	CHIP RESISTOR	PY01	330 OHM +- 5% 1/16W	
DUA RY10	CHIP RESISTOR	PY01	330 OHM +- 5% 1/16W	
DUA RY11	RESISTOR	PY01	100 OHM +- 5% 1/4W	
HPA CH01	ELECT CAP.	PH01	47UF/ 16V	
HPA CH02	ELECT CAP.	PH01	47UF/ 16V	
HPA CH03	ELECT CAP.	PH01	47UF/ 16V	
HPA CH04	ELECT CAP.	PH01	47UF/ 16V	
HPA CH05	CERAMIC CAP.	PH01	47PF +- 5%	
HPA CH06	CERAMIC CAP.	PH01	47PF +- 5%	
HPA CH07	CERAMIC CAP.	PH01	47PF +- 5%	
HPA CH08	CERAMIC CAP.	PH01	47PF +- 5%	
HPA CH09	ELECT CAP.	PH01	220UF/ 16V	
HPA CH10	ELECT CAP.	PH01	220UF/ 16V	
HPA CH11	CERAMIC CAP.	PH01	0.1UF	
HPA CH12	CERAMIC CAP.	PH01	0.1UF	
HPA CH13	ELECT CAP.	PH01	220UF/ 16V	
HPA CH14	ELECT CAP.	PH01	220UF/ 16V	
HPA CH15	CERAMIC CAP.	PH01	0.01UF +- 10%	
HPA CH16	CERAMIC CAP.	PH01	0.01UF +- 10%	
HPA CH17	CERAMIC CAP.	PH01	0.1UF	
HPA JH01	JACK	PH01	HLJ1540-01-3010	
HPA JH02	TERMINAL	PH01	M1698 PWB GND TERMINAL WITH M3	
HPA QH01	IC	PH01	MJM-4556A HP-AMP	
HPA QH03	CHIP TR. (2SC)	PH01	2SC3326 A CHIP TAPING	
HPA QH04	CHIP TR. (2SC)	PH01	2SC3326 A CHIP TAPING	
HPA QH05	CHIP TR. (2SC)	PH01	2SC3326 A CHIP TAPING	
HPA QH06	CHIP TR. (2SC)	PH01	2SC3326 A CHIP TAPING	
HPA RH01	CHIP RESISTOR	PH01	1K OHM +- 5% 1/16W	
HPA RH02	CHIP RESISTOR	PH01	1K OHM +- 5% 1/16W	
HPA RH03	VARIABLE RESIST	PH01	RK09K12A 10KBX2	
HPA RH05	CHIP RESISTOR	PH01	1K OHM +- 5% 1/16W	
HPA RH06	CHIP RESISTOR	PH01	1K OHM +- 5% 1/16W	
HPA RH07	CHIP RESISTOR	PH01	47K OHM +- 5% 1/16W	
HPA RH08	CHIP RESISTOR	PH01	47K OHM +- 5% 1/16W	
HPA RH09	CHIP RESISTOR	PH01	6.8K OHM +- 5% 1/16W	
HPA RH10	CHIP RESISTOR	PH01	6.8K OHM +- 5% 1/16W	
HPA RH11	CHIP RESISTOR	PH01	47K OHM +- 5% 1/16W	
HPA RH12	CHIP RESISTOR	PH01	47K OHM +- 5% 1/16W	
HPA RH13	CHIP RESISTOR	PH01	47K OHM +- 5% 1/16W	
HPA RH14	CHIP RESISTOR	PH01	47K OHM +- 5% 1/16W	
HPA RH15	RESISTOR	PH01	150 OHM +- 5% 1/4W	
HPA RH16	RESISTOR	PH01	150 OHM +- 5% 1/4W	
HPA RH17	CHIP RESISTOR	PH01	4.7K OHM +- 5% 1/16W	
HPA RH18	CHIP RESISTOR	PH01	4.7K OHM +- 5% 1/16W	
HPA RH19	CHIP RESISTOR	PH01	4.7K OHM +- 5% 1/16W	
HPA RH20	CHIP RESISTOR	PH01	4.7K OHM +- 5% 1/16W	
HPA WH01	CONNECTIVE CORD	PH01	PH-SAN 6PIN TO JK01	
LCA CU01	CERAMIC CAP.	PD01	0.1UF	
LCA CU02	TANTL.CAP CHIP	PD01	100UF/ 10V	
LCA CU03	CERAMIC CAP.	PD01	0.1UF	
LCA CU04	CERAMIC CAP.	PD01	15PF +- 5%	

SYMBOL#	PARTS NAME	PCB	DESCRIPTION	BRAND
LCA CU05	CERAMIC CAP.	PD01	15PF +- 5%	
LCA CU06	CERAMIC CAP.	PD01	0.1UF	
LCA CU07	CERAMIC CAP.	PD01	0.1UF	
LCA CU08	CERAMIC CAP.	PD01	0.1UF	
LCA CU09	TANTL.CAP CHIP	PD01	100UF/ 10V	
LCA CU10	CERAMIC CAP.	PD01	0.1UF	
LCA CU11	TANTL.CAP CHIP	PD01	100UF/ 10V	
LCA CU12	CERAMIC CAP.	PD01	0.1UF	
LCA CU13	CERAMIC CAP.	PD01	0.1UF	
LCA CU14	CERAMIC CAP.	PD01	220PF +- 10%	
LCA CU15	CERAMIC CAP.	PD01	220PF +- 10%	
LCA CU16	CERAMIC CAP.	PD01	220PF +- 10%	
LCA CU17	TANTL.CAP CHIP	PD01	47UF/ 16V	
LCA CU18	TANTL.CAP CHIP	PD01	47UF/ 16V	
LCA CU19	TANTL.CAP CHIP	PD01	47UF/ 16V	
LCA CU20	CERAMIC CAP.	PD01	220PF +- 10%	
LCA CU21	CERAMIC CAP.	PD01	100PF +- 5%	
LCA CU22	CERAMIC CAP.	PD01	100PF +- 5%	
LCA CU23	CERAMIC CAP.	PD01	100PF +- 5%	
LCA CU24	CERAMIC CAP.	PD01	220PF +- 10%	
LCA CU25	CERAMIC CAP.	PD01	220PF +- 10%	
LCA CU26	CERAMIC CAP.	PD01	220PF +- 10%	
LCA CU27	CERAMIC CAP.	PD01	220PF +- 10%	
LCA CU28	CERAMIC CAP.	PD01	220PF +- 10%	
LCA CU29	CERAMIC CAP.	PD01	220PF +- 10%	
LCA CU30	CERAMIC CAP.	PD01	220PF +- 10%	
LCA CU31	CERAMIC CAP.	PD01	220PF +- 10%	
LCA CU32	CERAMIC CAP.	PD01	0.1UF	
LCA CU33	TANTL.CAP CHIP	PD01	100UF/ 10V	
LCA CU80	CERAMIC CAP.	PD01	0.1UF	
LCA DU01	CHIP DIODE	PD01	1SS302 (TOSHIBA)	
LCA DU03	CHIP DIODE	PD01	1SS302 (TOSHIBA)	
LCA DU04	CHIP DIODE	PD01	1SS302 (TOSHIBA)	
LCA DU05	CHIP DIODE	PD01	1SS302 (TOSHIBA)	
LCA JU01	JACK	PD01	30FMN-BTTN-TF	
LCA JU02	JACK	PD01	B8B-PH-SM3-TB	
LCA JU08	JACK	PD01	B9B-PH-SM3-TB	
LCA QU01	IC	PD01	HD64F3062F FLASH MPU	
LCA QU02	IC	PD01	S8054HN (SEIKO DENSHI)	
LCA QU80	IC	PD01	AT25640 64K EEPROM ATMEL	
LCA QU99	IC	PD01	CMOS 74HC00 FLAT TAPING	
LCA RU02	CHIP RESISTOR	PD01	12K OHM +- 5% 1/16W	
LCA RU03	CHIP RESISTOR	PD01	12K OHM +- 5% 1/16W	
LCA RU04	CHIP RESISTOR	PD01	12K OHM +- 5% 1/16W	
LCA RU05	CHIP RESISTOR	PD01	47K OHM +- 5% 1/16W	
LCA RU06	CHIP RESISTOR	PD01	47K OHM +- 5% 1/16W	
LCA RU07	CHIP RESISTOR	PD01	470K OHM +- 5% 1/16W	
LCA RU08	CHIP RESISTOR	PD01	470K OHM +- 5% 1/16W	
LCA RU09	CHIP RESISTOR	PD01	12K OHM +- 5% 1/16W	
LCA RU10	CHIP RESISTOR	PD01	100 OHM +- 5% 1/16W	
LCA RU11	CHIP RESISTOR	PD01	100 OHM +- 5% 1/16W	
LCA RU12	CHIP RESISTOR	PD01	100 OHM +- 5% 1/16W	
LCA RU13	CHIP RESISTOR	PD01	100 OHM +- 5% 1/16W	

SYMBOL#	PARTS NAME	PCB	DESCRIPTION	BRAND
LCA RU14	CHIP RESISTOR	PD01	100 OHM +- 5% 1/16W	
LCA RU15	CHIP RESISTOR	PD01	100 OHM +- 5% 1/16W	
LCA RU16	CHIP RESISTOR	PD01	100 OHM +- 5% 1/16W	
LCA RU17	CHIP RESISTOR	PD01	100 OHM +- 5% 1/16W	
LCA RU18	CHIP RESISTOR	PD01	100 OHM +- 5% 1/16W	
LCA RU19	CHIP RESISTOR	PD01	100 OHM +- 5% 1/16W	
LCA RU20	CHIP RESISTOR	PD01	100 OHM +- 5% 1/16W	
LCA RU21	CHIP RESISTOR	PD01	100 OHM +- 5% 1/16W	
LCA RU22	CHIP RESISTOR	PD01	100 OHM +- 5% 1/16W	
LCA RU23	CHIP RESISTOR	PD01	100 OHM +- 5% 1/16W	
LCA RU24	CHIP RESISTOR	PD01	100 OHM +- 5% 1/16W	
LCA RU25	CHIP RESISTOR	PD01	100 OHM +- 5% 1/16W	
LCA RU26	CHIP RESISTOR	PD01	100 OHM +- 5% 1/16W	
LCA RU27	CHIP RESISTOR	PD01	100 OHM +- 5% 1/16W	
LCA RU28	CHIP RESISTOR	PD01	100 OHM +- 5% 1/16W	
LCA RU29	CHIP RESISTOR	PD01	100 OHM +- 5% 1/16W	
LCA RU30	CHIP RESISTOR	PD01	100 OHM +- 5% 1/16W	
LCA RU31	CHIP RESISTOR	PD01	100 OHM +- 5% 1/16W	
LCA RU32	CHIP RESISTOR	PD01	100 OHM +- 5% 1/16W	
LCA RU33	CHIP RESISTOR	PD01	100 OHM +- 5% 1/16W	
LCA RU34	CHIP RESISTOR	PD01	100 OHM +- 5% 1/16W	
LCA RU35	CHIP RESISTOR	PD01	100 OHM +- 5% 1/16W	
LCA RU37	CHIP RESISTOR	PD01	100 OHM +- 5% 1/16W	
LCA RU38	CHIP RESISTOR	PD01	100 OHM +- 5% 1/16W	
LCA RU39	CHIP RESISTOR	PD01	100K OHM +- 5% 1/16W	
LCA RU40	CHIP RESISTOR	PD01	22K OHM +- 5% 1/16W	
LCA RU80	CHIP RESISTOR	PD01	10K OHM +- 5% 1/16W	
LCA RU81	CHIP RESISTOR	PD01	10K OHM +- 5% 1/16W	
LCA XU01	CRYSTAL	PD01	CM309S 20MHZ X TAL CITIZEN	
LCB CL01	TANTL.CAP CHIP	PD01	10UF/ 16V	
LCB CL02	CERAMIC CAP.	PD01	0.1UF	
LCB CL03	CERAMIC CAP.	PD01	0.1UF	
LCB CL04	TANTL.CAP CHIP	PD01	10UF/ 16V	
LCB CL05	TANTL.CAP CHIP	PD01	10UF/ 16V	
LCB CL06	CERAMIC CAP.	PD01	0.1UF	
LCB CL07	CERAMIC CAP.	PD01	0.1UF	
LCB CL08	CERAMIC CAP.	PD01	0.1UF	
LCB LL01	EMI FILTER	PD01	NFM41P11C204	
LCB QL01	IC	PD01	RL5C357 RICOH SHOCK PROOF	
LCB QL02	IC	PD01	HY5117400BJ-60 DRAM HYUNDAI	
LCB RL01	CHIP RESISTOR	PD01	47 OHM +- 5% 1/16W	
LCB RL02	CHIP RESISTOR	PD01	47 OHM +- 5% 1/16W	
LCB RL03	CHIP RESISTOR	PD01	47 OHM +- 5% 1/16W	
LCB RL04	CHIP RESISTOR	PD01	47 OHM +- 5% 1/16W	
LCB RL05	CHIP RESISTOR	PD01	47 OHM +- 5% 1/16W	
LCB RL06	CHIP RESISTOR	PD01	100K OHM +- 5% 1/16W	
MXA CK01	ELECT CAP.	PK01	47UF/ 16V	
MXA CK02	ELECT CAP.	PK01	47UF/ 16V	
MXA CK03	ELECT CAP.	PK01	47UF/ 16V	
MXA CK04	ELECT CAP.	PK01	47UF/ 16V	
MXA CK05	CERAMIC CAP.	PK01	22PF +- 5%	
MXA CK06	CERAMIC CAP.	PK01	22PF +- 5%	
MXA CK07	CERAMIC CAP.	PK01	0.1UF	

SYMBOL#	PARTS NAME	PCB	DESCRIPTION	BRAND
MXA CK08	CERAMIC CAP.	PK01	0.1UF	
MXA CK09	CERAMIC CAP.	PK01	22PF +- 5%	
MXA CK10	CERAMIC CAP.	PK01	22PF +- 5%	
MXA CK11	ELECT CAP.	PK01	100UF/ 16V	
MXA CK12	ELECT CAP.	PK01	100UF/ 16V	
MXA CK13	ELECT CAP.	PK01	47UF/ 16V	
MXA CK14	ELECT CAP.	PK01	47UF/ 16V	
MXA CK15	ELECT CAP.	PK01	47UF/ 16V	
MXA CK16	ELECT CAP.	PK01	47UF/ 16V	
MXA CK17	CERAMIC CAP.	PK01	22PF +- 5%	
MXA CK18	CERAMIC CAP.	PK01	22PF +- 5%	
MXA CK19	ELECT CAP.	PK01	100UF/ 16V	
MXA CK20	ELECT CAP.	PK01	100UF/ 16V	
MXA CK21	CERAMIC CAP.	PK01	0.1UF	
MXA CK22	CERAMIC CAP.	PK01	0.1UF	
MXA CK23	CERAMIC CAP.	PK01	0.1UF	
MXA CK24	CERAMIC CAP.	PK01	0.1UF	
MXA CK25	CERAMIC CAP.	PK01	0.1UF	
MXA CK26	CERAMIC CAP.	PK01	0.1UF	
MXA CK51	ELECT CAP.	PK01	47UF/ 16V	
MXA CK52	ELECT CAP.	PK01	47UF/ 16V	
MXA CK53	CERAMIC CAP.	PK01	22PF +- 5%	
MXA CK54	CERAMIC CAP.	PK01	22PF +- 5%	
MXA CK55	ELECT CAP.	PK01	47UF/ 16V	
MXA CK56	ELECT CAP.	PK01	47UF/ 16V	
MXA CK57	CERAMIC CAP.	PK01	47PF +- 5%	
MXA CK58	CERAMIC CAP.	PK01	47PF +- 5%	
MXA CK59	CERAMIC CAP.	PK01	22PF +- 5%	
MXA CK60	CERAMIC CAP.	PK01	22PF +- 5%	
MXA CK61	ELECT CAP.	PK01	47UF/ 16V	
MXA CK62	ELECT CAP.	PK01	47UF/ 16V	
MXA CK63	CERAMIC CAP.	PK01	47PF +- 5%	
MXA CK64	CERAMIC CAP.	PK01	47PF +- 5%	
MXA CK65	CERAMIC CAP.	PK01	22PF +- 5%	
MXA CK66	CERAMIC CAP.	PK01	22PF +- 5%	
MXA CK67	ELECT CAP.	PK01	47UF/ 16V	
MXA CK68	ELECT CAP.	PK01	47UF/ 16V	
MXA CK69	ELECT CAP.	PK01	100UF/ 16V	
MXA CK70	ELECT CAP.	PK01	100UF/ 16V	
MXA CK71	ELECT CAP.	PK01	100UF/ 16V	
MXA CK72	ELECT CAP.	PK01	100UF/ 16V	
MXA CK73	CERAMIC CAP.	PK01	100PF +- 5%	
MXA CK74	CERAMIC CAP.	PK01	100PF +- 5%	
MXA CK75	CERAMIC CAP.	PK01	100PF +- 5%	
MXA CK76	CERAMIC CAP.	PK01	100PF +- 5%	
MXA CK77	CERAMIC CAP.	PK01	100PF +- 5%	
MXA CK78	CERAMIC CAP.	PK01	100PF +- 5%	
MXA CK79	CERAMIC CAP.	PK01	0.1UF	
MXA CK80	CERAMIC CAP.	PK01	0.1UF	
MXA DK01	CHIP DIODE	PK01	1SS302 (TOSHIBA)	
MXA DK02	CHIP DIODE	PK01	1SS302 (TOSHIBA)	
MXA DK03	CHIP DIODE	PK01	1SS302 (TOSHIBA)	
MXA DK04	CHIP DIODE	PK01	1SS302 (TOSHIBA)	

SYMBOL#	PARTS NAME	PCB	DESCRIPTION	BRAND
MXA DK05	CHIP DIODE	PK01	1SS302 (TOSHIBA)	
MXA JK01	JACK	PK01	B9B-PH-SM3 FOR A-PLAYER	
MXA JK02	JACK	PK01	B9B-PH-SM3 FOR B-PLAYER	
MXA JK03	JACK	PK01	22FMN-BMTTN-TF	
MXA JK04	JACK	PK01	B5B-PH-SM3 FOR X-FADER	
MXA JK05	JACK	PK01	B6B-PH-SM3 FOR HAEDPHONE AMP	
MXA JK06	TERMINAL	PK01	2P RCA JACK	
MXA JK07	TERMINAL	PK01	4P RCA PIN JACK (WHITE,RED)	
MXA JK99	JACK	PK99	S5B-PH-K-S FOR CROSS FADER	
MXA QK01	IC	PK01	NJM2068M TAPING	
MXA QK02	IC	PK01	NJM2068M TAPING	
MXA QK03	IC	PK01	BU4052BCF	
MXA QK04	IC	PK01	NJM2082M TAPING	
MXA QK51	IC	PK01	NJM2068M TAPING	
MXA QK52	IC	PK01	NJM2068M TAPING	
MXA QK53	IC	PK01	NJM2068M TAPING	
MXA QK55	CHIP TR. (2SC)	PK01	2SC3326 A CHIP TAPING	
MXA QK56	CHIP TR. (2SC)	PK01	2SC3326 A CHIP TAPING	
MXA QK57	CHIP TR. (2SC)	PK01	2SC3326 A CHIP TAPING	
MXA QK58	CHIP TR. (2SC)	PK01	2SC3326 A CHIP TAPING	
MXA QK59	CHIP TR. (2SC)	PK01	2SC3326 A CHIP TAPING	
MXA QK60	CHIP TR. (2SC)	PK01	2SC3326 A CHIP TAPING	
MXA RK01	CHIP RESISTOR	PK01	220K OHM +- 5% 1/16W	
MXA RK02	CHIP RESISTOR	PK01	220K OHM +- 5% 1/16W	
MXA RK03	CHIP RESISTOR	PK01	220K OHM +- 5% 1/16W	
MXA RK04	CHIP RESISTOR	PK01	220K OHM +- 5% 1/16W	
MXA RK05	CHIP RESISTOR	PK01	22K OHM +- 5% 1/16W	
MXA RK06	CHIP RESISTOR	PK01	22K OHM +- 5% 1/16W	
MXA RK07	CHIP RESISTOR	PK01	22K OHM +- 5% 1/16W	
MXA RK08	CHIP RESISTOR	PK01	22K OHM +- 5% 1/16W	
MXA RK09	CHIP RESISTOR	PK01	33K OHM +- 5% 1/16W	
MXA RK10	CHIP RESISTOR	PK01	33K OHM +- 5% 1/16W	
MXA RK11	CHIP RESISTOR	PK01	33K OHM +- 5% 1/16W	
MXA RK12	CHIP RESISTOR	PK01	33K OHM +- 5% 1/16W	
MXA RK13	CHIP RESISTOR	PK01	68K OHM +- 5% 1/16W	
MXA RK14	CHIP RESISTOR	PK01	68K OHM +- 5% 1/16W	
MXA RK15	CHIP RESISTOR	PK01	1K OHM +- 5% 1/16W	
MXA RK16	CHIP RESISTOR	PK01	1K OHM +- 5% 1/16W	
MXA RK17	CHIP RESISTOR	PK01	100K OHM +- 5% 1/16W	
MXA RK18	CHIP RESISTOR	PK01	100K OHM +- 5% 1/16W	
MXA RK19	CHIP RESISTOR	PK01	100K OHM +- 5% 1/16W	
MXA RK20	CHIP RESISTOR	PK01	100K OHM +- 5% 1/16W	
MXA RK21	CHIP RESISTOR	PK01	47K OHM +- 5% 1/16W	
MXA RK22	CHIP RESISTOR	PK01	47K OHM +- 5% 1/16W	
MXA RK23	CHIP RESISTOR	PK01	1K OHM +- 5% 1/16W	
MXA RK24	CHIP RESISTOR	PK01	1K OHM +- 5% 1/16W	
MXA RK25	CHIP RESISTOR	PK01	100K OHM +- 5% 1/16W	
MXA RK26	CHIP RESISTOR	PK01	100K OHM +- 5% 1/16W	
MXA RK27	CHIP RESISTOR	PK01	100K OHM +- 5% 1/16W	
MXA RK28	CHIP RESISTOR	PK01	100K OHM +- 5% 1/16W	
MXA RK29	CHIP RESISTOR	PK01	10K OHM +- 5% 1/16W	
MXA RK30	CHIP RESISTOR	PK01	10K OHM +- 5% 1/16W	
MXA RK31	CHIP RESISTOR	PK01	10K OHM +- 5% 1/16W	

SYMBOL#	PARTS NAME	PCB	DESCRIPTION	BRAND
MXA RK91	CHIP RESISTOR	PK01	4.7K OHM +- 5% 1/16W	
MXA RK92	CHIP RESISTOR	PK01	4.7K OHM +- 5% 1/16W	
MXA RK93	CHIP RESISTOR	PK01	4.7K OHM +- 5% 1/16W	
MXA RK94	CHIP RESISTOR	PK01	4.7K OHM +- 5% 1/16W	
MXA RK95	CHIP RESISTOR	PK01	4.7K OHM +- 5% 1/16W	
MXA RK96	CHIP RESISTOR	PK01	4.7K OHM +- 5% 1/16W	
MXA RK99	VARIABLE RESIST	PK99	45MM CROSS FADER 100K OHM B	
PSA C801	CERAMIC CAP.	PK01	0.1UF	
PSA C802	CERAMIC CAP.	PK01	0.1UF	
PSA C803	CERAMIC CAP.	PK01	0.1UF	
PSA C804	CERAMIC CAP.	PK01	0.1UF	
PSA C805	ELECT CAP.	PK01	3300UF/ 25V	
PSA C806	ELECT CAP.	PK01	3300UF/ 25V	
PSA C807	CERAMIC CAP.	PK01	0.1UF	
PSA C808	CERAMIC CAP.	PK01	0.1UF	
PSA C809	CERAMIC CAP.	PK01	0.1UF	
PSA C810	CERAMIC CAP.	PK01	0.1UF	
PSA C811	ELECT CAP.	PK01	470UF/ 16V	
PSA C812	ELECT CAP.	PK01	470UF/ 16V	
PSA C814	CERAMIC CAP.	PK01	0.1UF	
PSA C815	ELECT. CAP.	PK01	4700UF/ 16V	
PSA C816	ELECT. CAP.	PK01	4700UF/ 16V	
PSA C817	ELECT. CAP.	PK01	4700UF/ 16V	
PSA C818	ELECT. CAP.	PK01	4700UF/ 16V	
PSA C819	CERAMIC CAP.	PK01	0.1UF	
PSA C820	CERAMIC CAP.	PK01	0.1UF	
PSA C821	CERAMIC CAP.	PK01	0.1UF	
PSA C822	CERAMIC CAP.	PK01	0.1UF	
PSA C823	ELECT CAP.	PK01	1000UF/ 10V	
PSA C824	ELECT CAP.	PK01	1000UF/ 10V	
PSA C825	CERAMIC CAP.	PK01	0.1UF	
PSA C826	CERAMIC CAP.	PK01	0.1UF	
PSA C827	ELECT. CAP.	PK01	4700UF/ 16V	
PSA C830	CERAMIC CAP.	PK01	0.1UF	
PSA C831	CERAMIC CAP.	PK01	0.1UF	
PSA C832	ELECT CAP.	PK01	100UF/ 16V	
PSA C833	ELECT CAP.	PK01	100UF/ 16V	
PSA C850	ELECT CAP.	PK01	10UF/ 50V	
PSA C851	CERAMIC CAP.	P801	0.01UF +- 20%	
PSA C854	ELECT CAP.	PK01	10UF/ 50V	
PSA D801	DIODE	PK01	! D3SB 20 V=200V,IO=3.0A	
PSA D802	DIODE	PK01	! S1ZB40 BRIDGE DIODE	
PSA D803	CHIP DIODE	PK01	1SS302 (TOSHIBA)	
PSA D804	CHIP DIODE	PK01	1SS302 (TOSHIBA)	
PSA D805	CHIP DIODE	PK01	1SS302 (TOSHIBA)	
PSA D850	CHIP DIODE	PK01	1SS302 (TOSHIBA)	
PSA D851	CHIP DIODE	PK01	1SS302 (TOSHIBA)	
PSA J801	PLUG	PK01	B5PS-VH	
PSA J802	TERMINAL	PK01	GND TERMINAL FOR PCB	
PSA J851	PLUG	P801	2P PLUG B2P3S-VH	
PSA J852	PLUG	P801	2P PLUG B2P3S-VH	
PSA J853	JACK	P801	FUSE CLIP	
PSA J854	JACK	P801	FUSE CLIP	

SYMBOL#	PARTS NAME	PCB	DESCRIPTION	BRAND
PSA L851		P801	LF-4D-102	
PSA Q801	IC	PK01	!NJM78M12FA	
PSA Q802	IC	PK01	!NJM79M12AF -12V 0.5A	
PSA Q803	IC	PK01	!PQ05RD2 5V 2A	
PSA Q804	IC	PK01	!PQ05RD2 5V 2A	
PSA Q830	IC	PK01	NJM4558M(Y)	
PSA Q850	CHIP TR. (2SC)	PK01	2SC3326 A CHIP TAPING	
PSA Q851	CHIP TR. (2SC)	PK01	2SC2712 0,Y	
PSA Q852	CHIP TR. (2SC)	PK01	2SC2712 0,Y	
PSA R801	RESISTOR	PK01	2.2 OHM +- 5% 1/6W	
PSA R802	RESISTOR	PK01	2.2 OHM +- 5% 1/6W	
PSA R830	CHIP RESISTOR	PK01	4.7K OHM +- 5% 1/16W	
PSA R831	CHIP RESISTOR	PK01	4.7K OHM +- 5% 1/16W	
PSA R832	CHIP RESISTOR	PK01	4.7K OHM +- 5% 1/16W	
PSA R833	CHIP RESISTOR	PK01	4.7K OHM +- 5% 1/16W	
PSA R834	CHIP RESISTOR	PK01	470 OHM +- 5% 1/16W	
PSA R835	CHIP RESISTOR	PK01	470 OHM +- 5% 1/16W	
PSA R850	RESISTOR	PK01	100 OHM +- 5% 1/6W	
PSA R851	CHIP RESISTOR	PK01	47K OHM +- 5% 1/16W	
PSA R852	CHIP RESISTOR	PK01	4.7K OHM +- 5% 1/16W	
PSA R853	CHIP RESISTOR	PK01	100K OHM +- 5% 1/16W	
PSA R854	CHIP RESISTOR	PK01	220K OHM +- 5% 1/16W	
PSA R855	CHIP RESISTOR	PK01	47K OHM +- 5% 1/16W	
PSA R856	CHIP RESISTOR	PK01	47K OHM +- 5% 1/16W	
PSA S851	PUSH SWITCH	P801	# POWER SW ALPS SD1P-A TV3	
SWA CS01	CERAMIC CAP.	PS01	0.1UF	
SWA CS02	ELECT CAP.	PS01	100UF/ 16V	
SWA CS03	CERAMIC CAP.	PS01	0.1UF	
SWA CS04	ELECT CAP.	PS01	10UF/ 16V	
SWA CS05	CERAMIC CAP.	PS01	0.1UF	
SWA CS06	CERAMIC CAP.	PS01	0.1UF	
SWA CS07	CERAMIC CAP.	PS01	0.1UF	
SWA CS08	CERAMIC CAP.	PS01	0.1UF	
SWA CS09	CERAMIC CAP.	PS01	0.1UF	
SWA CS10	CERAMIC CAP.	PS01	0.1UF	
SWA CS11	CERAMIC CAP.	PS01	0.1UF	
SWA CS12	CERAMIC CAP.	PS01	0.1UF	
SWA CS13	CERAMIC CAP.	PS01	0.1UF	
SWA CS14	CERAMIC CAP.	PS01	0.1UF	
SWA CS15	CERAMIC CAP.	PS01	0.1UF	
SWA CS16	CERAMIC CAP.	PS01	0.1UF	
SWA CS17	CERAMIC CAP.	PS01	0.1UF	
SWA CS18	CERAMIC CAP.	PS01	0.1UF	
SWA CS19	ELECT CAP.	PS01	100UF/ 16V	
SWA CS20	CERAMIC CAP.	PS01	0.1UF	
SWA CS21	CERAMIC CAP.	PS01	0.1UF	
SWA CS22	CERAMIC CAP.	PS01	0.1UF	
SWA CS23	ELECT CAP.	PS01	100UF/ 16V	
SWA CS24	ELECT CAP.	PS01	100UF/ 16V	
SWA DS01	CHIP DIODE	PS01	1SS302 (TOSHIBA)	
SWA DS02	L.E.D.	PS01	GL3ED8 SHARP	
SWA DS03	L.E.D.	PS01	GL3ED8 SHARP	
SWA DS04	L.E.D.	PS01	GL3ED8 SHARP	

SYMBOL#	PARTS NAME	PCB	DESCRIPTION	BRAND
SWA DS05	L.E.D.	PS01	GL3ED8 SHARP	
SWA DS06	L.E.D.	PS01	LT3D8B RED 3O	
SWA DS07	L.E.D.	PS01	LT3D8B RED 3O	
SWA DS08	CHIP DIODE	PS01	1SS302 (TOSHIBA)	
SWA JS01	JACK	PS01	30FMN-SMT-TF	
SWA JS02	PLUG	PS01	12P BASE PIN	
SWA JS03	JACK	PS01	S5B-PH-SM3-TB FOR PITCH VOL.	
SWA QS01	IC	PS01	74HC4094BT	
SWA QS02	PHOTO UNIT	PS01	GP1A57HR	
SWA QS03	CHIP TR. (2SA)	PS01	2SA1162 O,Y	
SWA QS05	CHIP TR. (2SA)	PS01	2SA1162 O,Y	
SWA QS07	CHIP TR. (2SC)	PS01	2SC2712 O,Y	
SWA QS08	CHIP TR. (2SC)	PS01	2SC2712 O,Y	
SWA RS01	CHIP RESISTOR	PS01	100K OHM +- 5% 1/16W	
SWA RS02	CHIP RESISTOR	PS01	560 OHM +- 5% 1/10W	
SWA RS03	CHIP RESISTOR	PS01	4.7K OHM +- 5% 1/16W	
SWA RS04	CHIP RESISTOR	PS01	100K OHM +- 5% 1/16W	
SWA RS05	CHIP RESISTOR	PS01	10K OHM +- 5% 1/16W	
SWA RS07	CHIP RESISTOR	PS01	100K OHM +- 5% 1/16W	
SWA RS08	CHIP RESISTOR	PS01	10K OHM +- 5% 1/16W	
SWA RS10	CHIP RESISTOR	PS01	330 OHM +- 5% 1/10W	
SWA RS11	CHIP RESISTOR	PS01	330 OHM +- 5% 1/10W	
SWA RS12	CHIP RESISTOR	PS01	330 OHM +- 5% 1/10W	
SWA RS13	CHIP RESISTOR	PS01	330 OHM +- 5% 1/10W	
SWA RS14	CHIP RESISTOR	PS01	220 OHM +- 5% 1/10W	
SWA RS15	CHIP RESISTOR	PS01	220 OHM +- 5% 1/10W	
SWA RS16	CHIP RESISTOR	PS01	220 OHM +- 5% 1/10W	
SWA RS17	CHIP RESISTOR	PS01	220 OHM +- 5% 1/10W	
SWA RS18	CHIP RESISTOR	PS01	330 OHM +- 5% 1/10W	
SWA RS19	CHIP RESISTOR	PS01	330 OHM +- 5% 1/10W	
SWA RS20	CHIP RESISTOR	PS01	100K OHM +- 5% 1/16W	
SWA RS21	CHIP RESISTOR	PS01	100K OHM +- 5% 1/16W	
SWA RS22	CHIP RESISTOR	PS01	10K OHM +- 5% 1/16W	
SWA RS23	CHIP RESISTOR	PS01	10K OHM +- 5% 1/16W	
SWA RS24	CHIP RESISTOR	PS01	4.7K OHM +- 5% 1/16W	
SWA RS25	CHIP RESISTOR	PS01	4.7K OHM +- 5% 1/16W	
SWA RS26	CHIP RESISTOR	PS01	4.7K OHM +- 5% 1/16W	
SWA RS27	CHIP RESISTOR	PS01	4.7K OHM +- 5% 1/16W	
SWA RS28	CHIP RESISTOR	PS01	4.7K OHM +- 5% 1/16W	
SWA RS29	CHIP RESISTOR	PS01	4.7K OHM +- 5% 1/16W	
SWA RS30	CHIP RESISTOR	PS01	4.7K OHM +- 5% 1/16W	
SWA RS31	CHIP RESISTOR	PS01	4.7K OHM +- 5% 1/16W	
SWA SS01	PUSH SWITCH	PS01	EVQ11L05R H/5MM,160GF	
SWA SS02	PUSH SWITCH	PS01	EVQ11L05R H/5MM,160GF	
SWA SS03	PUSH SWITCH	PS01	EVQ11L05R H/5MM,160GF	
SWA SS04	PUSH SWITCH	PS01	EVQ11L05R H/5MM,160GF	
SWA SS05	PUSH SWITCH	PS01	EVQ11L05R H/5MM,160GF	
SWA SS06	PUSH SWITCH	PS01	EVQ11L05R H/5MM,160GF	
SWA SS07	PUSH SWITCH	PS01	EVQ11L05R H/5MM,160GF	
SWA SS08	PUSH SWITCH	PS01	EVQ11L05R H/5MM,160GF	
SWB CS51	CERAMIC CAP.	PS03	0.1UF	
SWB CS52	CERAMIC CAP.	PS04	0.1UF	
SWB CS53	CERAMIC CAP.	PS03	0.1UF	

SYMBOL#	PARTS NAME	PCB	DESCRIPTION	BRAND
SWB CS54	CERAMIC CAP.	PS04	0.1UF	
SWB CS55	CERAMIC CAP.	PS05	0.1UF	
SWB CS56	CERAMIC CAP.	PS06	0.1UF	
SWB CS57	CERAMIC CAP.	PS05	0.1UF	
SWB CS58	CERAMIC CAP.	PS06	0.1UF	
SWB CS59	CERAMIC CAP.	PS05	0.1UF	
SWB CS60	CERAMIC CAP.	PS06	0.1UF	
SWB CS61	CERAMIC CAP.	PS03	0.1UF	
SWB CS62	CERAMIC CAP.	PS04	0.1UF	
SWB CS63	CERAMIC CAP.	PS03	0.1UF	
SWB CS64	CERAMIC CAP.	PS04	0.1UF	
SWB DS51	CHIP DIODE	PS05	1SS302 (TOSHIBA)	
SWB DS52	CHIP DIODE	PS06	1SS302 (TOSHIBA)	
SWB DS53	CHIP DIODE	PS05	1SS302 (TOSHIBA)	
SWB DS54	CHIP DIODE	PS06	1SS302 (TOSHIBA)	
SWB RS51	VARIABLE RESIST	PS03	RSA0N11S 100MM L=20 #4 SNAP B	
SWB RS52	VARIABLE RESIST	PS04	RSA0N11S 100MM L=20 #4 SNAP B	
SWB RS53	VARIABLE RESIST	PS05	STICK CONTROLLER RKJXC120 10KB	
SWB RS54	VARIABLE RESIST	PS06	STICK CONTROLLER RKJXC120 10KB	
SWB RS55	CHIP RESISTOR	PS05	4.7K OHM +- 5% 1/16W	
SWB RS56	CHIP RESISTOR	PS06	4.7K OHM +- 5% 1/16W	
SWB WS51	CONNECTIVE CORD	PS03	PD09A-05M - PHR-5 UL1061 AWG28	
SWB WS52	CONNECTIVE CORD	PS04	PHR-5 - PD09A-05M UL1061 AWG28	
SWB WS53	JUMPER LEAD	PS03	AWG26 40MM	
SWB WS54	JUMPER LEAD	PS04	AWG26 40MM	
VRA CE01	ELECT CAP.	PY01	47UF/ 16V	
VRA CE02	ELECT CAP.	PY01	47UF/ 16V	
VRA CE03	CERAMIC CAP.	PY01	47PF +- 5%	
VRA CE04	CERAMIC CAP.	PY01	47PF +- 5%	
VRA CE05	CERAMIC CAP.	PY01	22PF +- 5%	
VRA CE06	CERAMIC CAP.	PY01	22PF +- 5%	
VRA CE07	ELECT CAP.	PY01	47UF/ 16V	
VRA CE08	ELECT CAP.	PY01	47UF/ 16V	
VRA CE09	CERAMIC CAP.	PY01	47PF +- 5%	
VRA CE10	CERAMIC CAP.	PY01	47PF +- 5%	
VRA CE11	CERAMIC CAP.	PY01	22PF +- 5%	
VRA CE12	CERAMIC CAP.	PY01	22PF +- 5%	
VRA CE13	CERAMIC CAP.	PY01	22PF +- 5%	
VRA CE14	CERAMIC CAP.	PY01	22PF +- 5%	
VRA CE15	ELECT CAP.	PY01	47UF/ 16V	
VRA CE16	ELECT CAP.	PY01	47UF/ 16V	
VRA CE17	ELECT CAP.	PY01	47UF/ 16V	
VRA CE18	ELECT CAP.	PY01	47UF/ 16V	
VRA CE19	ELECT CAP.	PY01	47UF/ 16V	
VRA CE20	ELECT CAP.	PY01	47UF/ 16V	
VRA CE94	CERAMIC CAP.	PY01	0.01UF +- 10%	
VRA CE95	CERAMIC CAP.	PY01	0.01UF +- 10%	
VRA CE96	ELECT CAP.	PY01	47UF/ 16V	
VRA CE97	CERAMIC CAP.	PY01	0.01UF +- 10%	
VRA CE98	CERAMIC CAP.	PY01	0.01UF +- 10%	
VRA CE99	CERAMIC CAP.	PY01	0.01UF +- 10%	
VRA JE01	JACK	PY01	22FMN-BMTTN-TF	
VRA QE01	IC	PY01	NJM2068M TAPING	

SYMBOL#	PARTS NAME	PCB	DESCRIPTION	BRAND
VRA QE02	IC	PY01	NJM2068M TAPING	
VRA QE03	IC	PY01	NJM2068M TAPING	
VRA RE01	VARIABLE RESIST	PY01	50K(B) FOR A-PLAYER VOL.	
VRA RE02	VARIABLE RESIST	PY01	50K(B) FOR B-PLAYER VOL.	
VRA RE03	CHIP RESISTOR	PY01	100 OHM +- 5% 1/16W	
VRA RE04	CHIP RESISTOR	PY01	100 OHM +- 5% 1/16W	
VRA RE05	CHIP RESISTOR	PY01	100K OHM +- 5% 1/16W	
VRA RE06	CHIP RESISTOR	PY01	100K OHM +- 5% 1/16W	
VRA RE07	CHIP RESISTOR	PY01	1K OHM +- 5% 1/16W	
VRA RE08	CHIP RESISTOR	PY01	1K OHM +- 5% 1/16W	
VRA RE09	CHIP RESISTOR	PY01	22K OHM +- 5% 1/16W	
VRA RE10	CHIP RESISTOR	PY01	22K OHM +- 5% 1/16W	
VRA RE11	CHIP RESISTOR	PY01	22K OHM +- 5% 1/16W	
VRA RE12	CHIP RESISTOR	PY01	22K OHM +- 5% 1/16W	
VRA RE13	CHIP RESISTOR	PY01	100 OHM +- 5% 1/16W	
VRA RE14	CHIP RESISTOR	PY01	100 OHM +- 5% 1/16W	
VRA RE15	CHIP RESISTOR	PY01	100 OHM +- 5% 1/16W	
VRA RE16	CHIP RESISTOR	PY01	100 OHM +- 5% 1/16W	
VRA RE17	CHIP RESISTOR	PY01	100K OHM +- 5% 1/16W	
VRA RE18	CHIP RESISTOR	PY01	100K OHM +- 5% 1/16W	
VRA RE19	CHIP RESISTOR	PY01	1K OHM +- 5% 1/16W	
VRA RE20	CHIP RESISTOR	PY01	1K OHM +- 5% 1/16W	
VRA RE21	CHIP RESISTOR	PY01	22K OHM +- 5% 1/16W	
VRA RE22	CHIP RESISTOR	PY01	22K OHM +- 5% 1/16W	
VRA RE23	CHIP RESISTOR	PY01	22K OHM +- 5% 1/16W	
VRA RE24	CHIP RESISTOR	PY01	22K OHM +- 5% 1/16W	
VRA RE25	CHIP RESISTOR	PY01	100 OHM +- 5% 1/16W	
VRA RE26	CHIP RESISTOR	PY01	100 OHM +- 5% 1/16W	
VRA RE27	CHIP RESISTOR	PY01	220K OHM +- 5% 1/16W	
VRA RE28	CHIP RESISTOR	PY01	220K OHM +- 5% 1/16W	
VRA RE29	CHIP RESISTOR	PY01	220K OHM +- 5% 1/16W	
VRA RE30	CHIP RESISTOR	PY01	220K OHM +- 5% 1/16W	
VRA RE31	CHIP RESISTOR	PY01	33K OHM +- 5% 1/16W	
VRA RE32	CHIP RESISTOR	PY01	33K OHM +- 5% 1/16W	
VRA RE98	CHIP RESISTOR	PY01	22K OHM +- 5% 1/16W	
VRA RE99	CHIP RESISTOR	PY01	22K OHM +- 5% 1/16W	
VRA SE01	SWITCH	PY01	LBC23M-15K LEVER SW VAR. L=15	
0BA 001B	FRONT PANEL		FRONT PANEL (BLACK)	
0BA 001B	FRONT PANEL		FRONT PANEL (GREEN)	
0BA 001B	FRONT PANEL		FRONT PANEL(SILVER)	
0BA 001B	FRONT PANEL		FRONT PANEL (BLACK)	
0BA 001B	FRONT PANEL		FRONT PANEL (GREEN)	
0BA 001B	FRONT PANEL		FRONT PANEL(SILVER)	
0BA 001B	FRONT PANEL		FRONT PANEL (BLACK)	
0BA 001B	FRONT PANEL		FRONT PANEL (GREEN)	
0BA 001B	FRONT PANEL		FRONT PANEL(SILVER)	
0BA 003B	H.S. HEAD BOLT		SCREW FOR FRONT PANEL	
0BA 005B	B.T.SCREW(W/W)		SCREW FOR FRONT PANEL SIDE	
0BA 007B	LEVER		LEVER FOR JOYSTICK	
0BA 009B	KNOB		KNOB FOR FADER (BLACK)	
0BA 009B	KNOB		KNOB FOR FADER (BLACK)	
0BA 009B	KNOB		KNOB FOR FADER (GOLD)	
0BA 009B	KNOB		KNOB FOR FADER (BLACK)	

SYMBOL#	PARTS NAME	PCB	DESCRIPTION	BRAND
0BA 009B	KNOB		KNOB FOR FADER (BLACK)	
0BA 009B	KNOB		KNOB FOR FADER(GOLD)	
0BA 009B	KNOB		KNOB FOR FADER (BLACK)	
0BA 009B	KNOB		KNOB FOR FADER (BLACK)	
0BA 009B	KNOB		KNOB FOR FADER(GOLD)	
0BA 010B	KNOB		KNOB FOR VOL	
0BA 011B	SIDE PANEL		SIDE PANEL(FRONT WOOD)BLACK	
0BA 011B	SIDE PANEL		SIDE PANEL(FRONT WOOD)NATURAL	
0BA 011B	SIDE PANEL		SIDE PANEL (FRONT WOOD)NATURAL	
0BA 011B	SIDE PANEL		SIDE PANEL(FRONT WOOD)BLACK	
0BA 011B	SIDE PANEL		SIDE PANEL(FRONT WOOD)NATURAL	
0BA 011B	SIDE PANEL		SIDE PANEL (FRONT WOOD)NATURAL	
0BA 011B	SIDE PANEL		SIDE PANEL(FRONT WOOD)BLACK	
0BA 011B	SIDE PANEL		SIDE PANEL(FRONT WOOD)NATURAL	
0BA 011B	SIDE PANEL		SIDE PANEL (FRONT WOOD)MATURAL	
0BA 012B	B.H. TAP. SCREW		SCREW FOR SIDE WOOD	
0BA 013B	ESCUTCHEON		ESCUTCHEON(CROSS FADER) BLACK	
0BA 013B	ESCUTCHEON		ESCUTCHEON(CROSS FADER) GREEN	
0BA 013B	ESCUTCHEON		ESCUTHEON FOR CROSS FADER GLD	
0BA 013B	ESCUTCHEON		ESCUTCHEON(CROSS FADER) BLACK	
0BA 013B	ESCUTCHEON		ESCUTCHEON(CROSS FADER) GREEN	
0BA 013B	ESCUTCHEON		ESCUTHE ON FOR CROSS FADER GLD	
0BA 013B	ESCUTCHEON		ESCUTCHEON(CROSS FADER) BLACK	
0BA 013B	ESCUTCHEON		ESCUTCHEON(CROSS FADER) GREEN	
0BA 013B	ESCUTCHEON		ESCUTHEON FOR CROSS FADER GLD	
0BA 014B	MASK		MASK FOR CROSS FADER	
0BA 015B	F.H.M. SCREW		SCREW FOR CROSS FADER	
0BA 016B	F.H.M. SCREW		SCREW FOR CROSS FADER ESCUTCHE	
0BA 017B	WINDOW		WINDOW FOR LEVEL METER	
0GA 001G	CHASSIS		CHASSIS(BOTTOM)	
0GA 002G	LEG		LEG FOR SET(REAR)	
0GA 003G	LEG		LEG FOR SET(FRONT)	
0GA 004G	B.T.SCREW(W/W)		SCREW FOR LEG	
0GA 005G	B.H. TAP. SCREW		SCREW FOR TRANS	
0GA 006G	HEATSINK	PK00	HEAT SINK	
0GA 007G	B.H.M. SCREW	PK00	SCREW FOR HEAT SINK	
0GA 008G	HEATSINK	PK00	HEAT SINK FOR +-12 REG IC	
0GA 009G	B.H. TAP. SCREW	PK00	SCREW FOR HEAT SINK	
0GA 010G	SUPPORT		SUPORT FOR MIXER PCB	
0GA 011G	CLAMPER		CLAMPER FOR TRANS COAD ETC.	
0GA 012G	LABEL		LABEL FOR FUSE(N)	
0GA 012G	LABEL		LABEL FOR FUSE(N)	
0GA 012G	LABEL		LABEL FOR FUSE(N)	
0GA 013G	BRACKET		BRACKET FOR POWER SW	
0GA 013G	BRACKET		BRACKET FOR POWER SW	
0GA 013G	BRACKET		BRACKET FOR POWER SW	
0GA 013G	BRACKET		BRACKET FOR POWER SW	
0GA 013G	BRACKET		BRACKET FOR POWER SW	
0GA 013G	BRACKET		BRACKET FOR POWER SW	
0GA 013G	BRACKET		BRACKET FOR POWER SW	
0GA 013G	BRACKET		BRACKET FOR POWER SW	
0GA 013G	BRACKET		BRACKET FOR POWER SW	
0GA 015G	B.H.M. SCREW		SCREW FOR BRACKET AT P.W. S.W.	

SYMBOL#	PARTS NAME	PCB	DESCRIPTION	BRAND
0GA 016G	B.H.M. SCREW		SCREW FOR POWER SUPPLY PCB	
0GA 018G	SCREW		SCREW FOR PHONE JACK	
0GA 019G	NUT		NUT FOR PHONE JACK	
0GA 020G	SPACER		WASHER FOR PHONE JACK	
0GA 021G	CHASSIS		CHASSIS(MIDDLE)	
0GA 023G	B.H.M. SCREW		SCREW FOR FADER(PITCH CON.)	
0GA 024G	MASK		MASK FOR FADER (HIMELON)	
0GA 025G	F.H.TAPT.SCREW		SCREW FOR JOY STICK	
0GA 027G	PH.TAP.SCREW		SCREW FOR MIDDLE AND BOTTOM CH	
0GA 028G	F.H.TAPT.SCREW		SCREW FOR MIDDLE AND BOTTOM CH	
0GA 035G	BRACKET		BRACKET FOR CROSS FADER	
0GA 036G	B.H. TAP. SCREW		SCREW FOR BRACKET	
0GA 037G	B.H.M. SCREW		SCREW FOR LED AND SW. PCB	
0GA 038G	HOLDER		HOLDER FOR LEVEL LED(DY07,08)	
0GA 039G	B.H. TAP. SCREW		SCREW FOR LED AND SW. PCB	
0GA 040G	B.H. TAP. SCREW		SCREW FOR LCD PCB	
0GA 041G	MASK		MASK FOR SWITCH (HIMELON)	
0GA 043G	BRACKET		BRACKET FOR EMC	
0GA 051G	CHASSIS		CHASSIS FOR PICKUP MECHA(MOLD)	
0GA 053G	LEAF SPRING		LEAF SPRING FOR WINDOW	
0GA 055G	B.H. TAP. SCREW		SCREW FOR LEAF SPRING	
0GA 057G	SHAFT		SHAFT FOR HUTA MECHA (SMALL)	
0GA 059G	ROLLER		ROLLER FOR SHAFT (S)	
0GA 061G	RG RING E		E RING FOR SHAFT	
0GA 063G	BRACKET		BRACKET FOR HUTA MECHA	
0GA 065G	SHAFT		SHAFT FOR HUTA MECHA (LARGE)	
0GA 067G	RG RING E		E RING FOR SHAFT	
0GA 071G	B.H. TAP. SCREW		SCREW FOR CD PCB	
0GA 072G	BUFFER		BUFFER FOR PICK UP MECHA	
0GA 075G	MECHANISM		VAM2103/11	
0GA 079G	BUFFER		BUFFER FOR PICK UP MECHA(DAMP)	
0GA 080G	MASK		MASK FOR COVER(S)	
0GA 081G	COVER		COVER FOR CD PICK UP	
0GA 083G	B.H. TAP. SCREW		SCREW FOR COVER	
0GA 088G	SPACER		SPACER FOR LED(LH-5-4)	
0GA 090G	MASK		MASK FOR SENSER	
0GA 091G	BUTTON		BUTTON FOR PLAY	
0GA 093G	B.H. TAP. SCREW		SCREW FOR KEY SW. PCB	
0GA 095G	WINDOW		WINDOW FOR HUTA	
0GA 097G	KNOB		KNOB FOR CD LID	
0GA 098G	COVER		COVER FOR WINDOW AND KNOB	
0GA 099G	B.H.M. SCREW		SCREW FOR KNOB AND WINDOW	
0GA 101G	H.S. HEAD BOLT		SCREW FOR WINDOW AND BRACKET	
0GA 103G	WINDOW		WINDOW FOR COUNTER	
0GA 105G	B.H. TAP. SCREW		SCREW FOR CHASSIS(MOLD)	
0GA 107G	B.H. TAP. SCREW		SCREW FOR CHASSIS(MOLD)	
0GA 109G	LABEL		LABEL FOR DANGER AT BOTTOM	
0GA 109G	LABEL		LABEL FOR DANGER AT BOTTOM	
0GA 109G	LABEL		LABEL FOR DANGER AT BOTTOM	
0GA 119G	BUFFER		BUFFER FOR WINDOW	
0GA 131G	SPACER		SPACER FOR BRACKET	
0GA 151G	SPACER		LCD SPACER	
0GA 152G	REFLECTOR		REFRECTOR SHEET	

MOUNTWASRDHFCSRMLK　　AV事業部

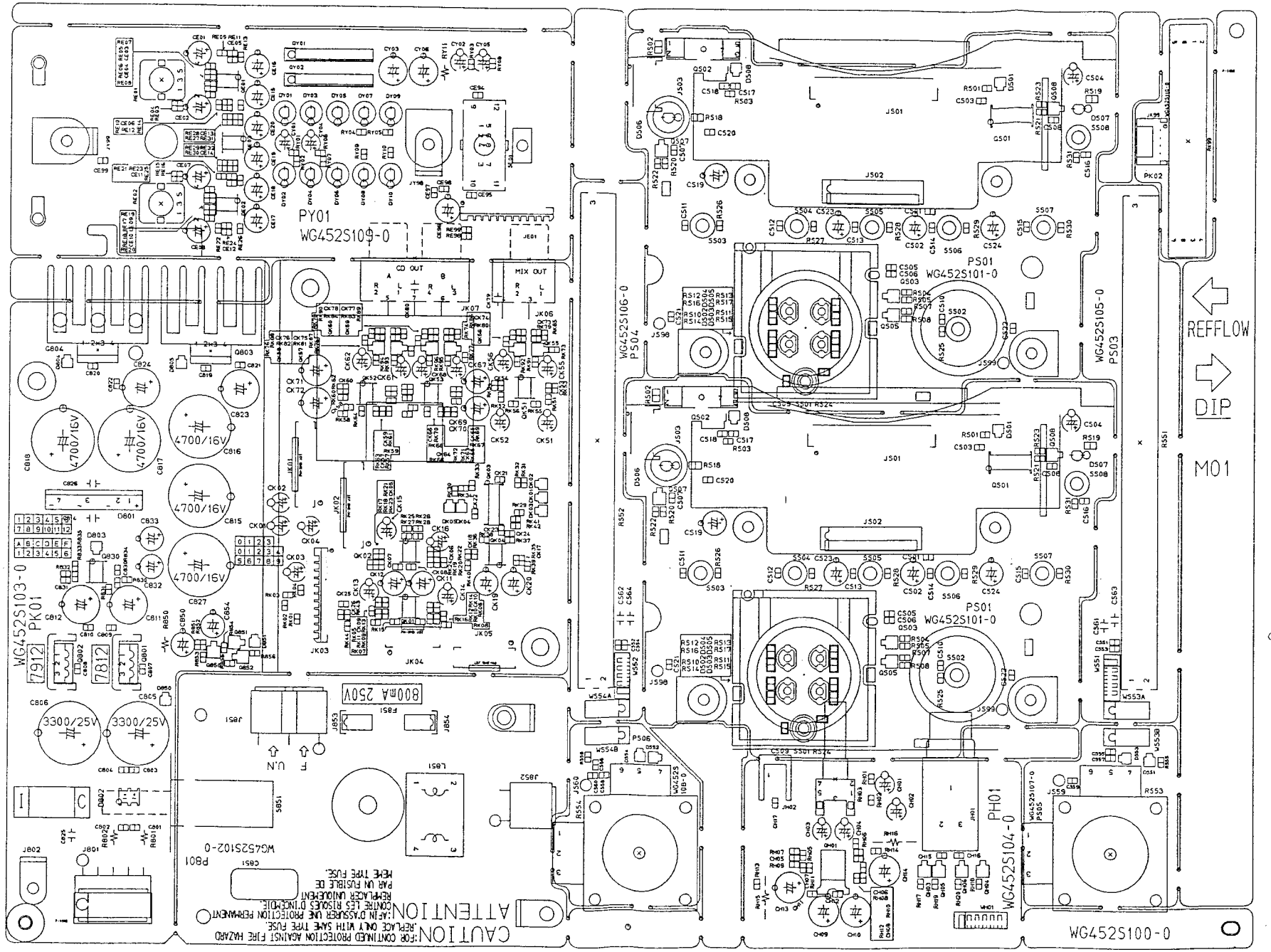

2000N0114/120511b/NG452S1000[S/M]

OUTWARD-FORM　　AV事業部

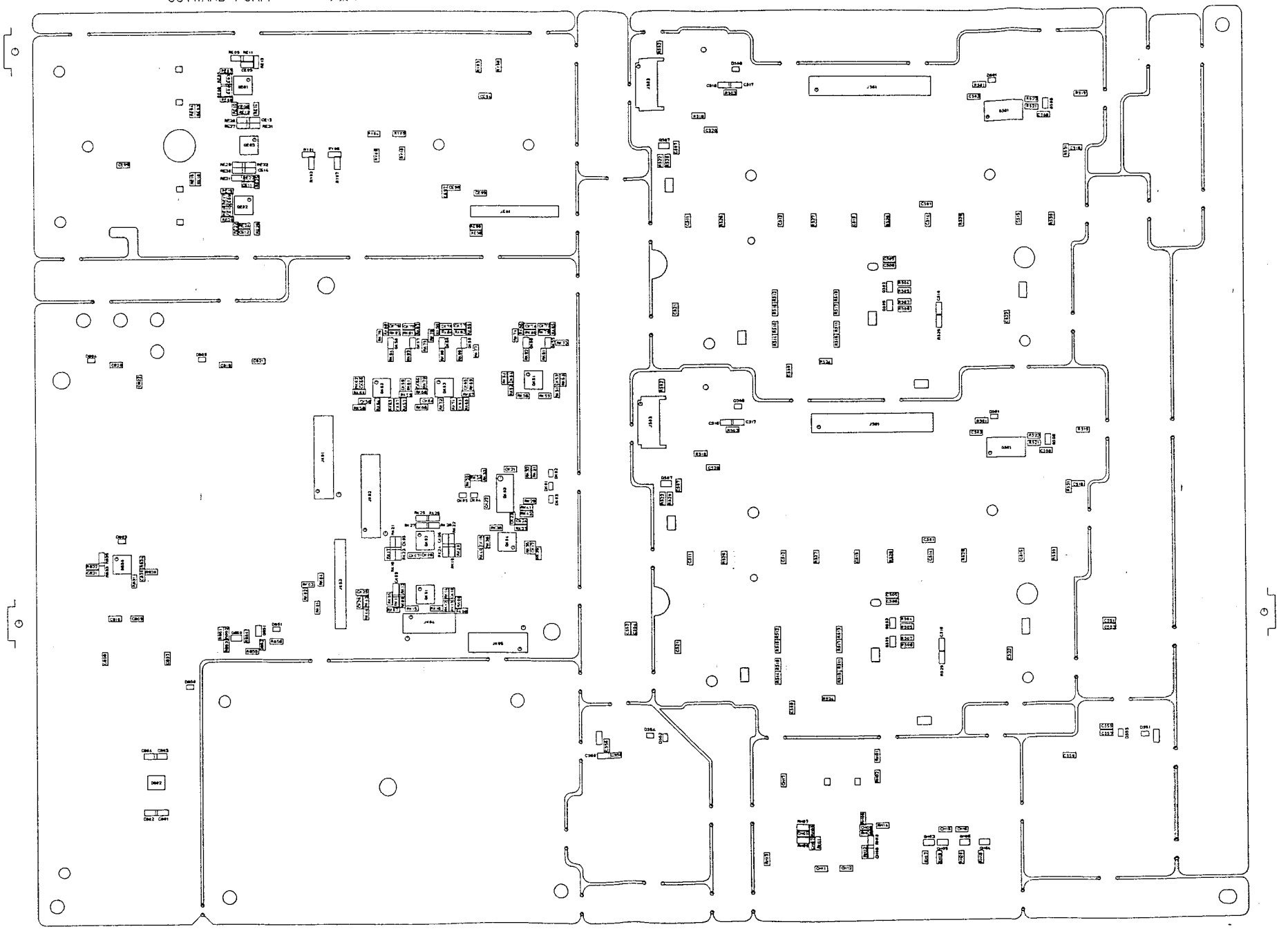

2000N0114/120511b/NG452S1000[S/M]

MOUNTWARDEFORM1K　　AV事業部

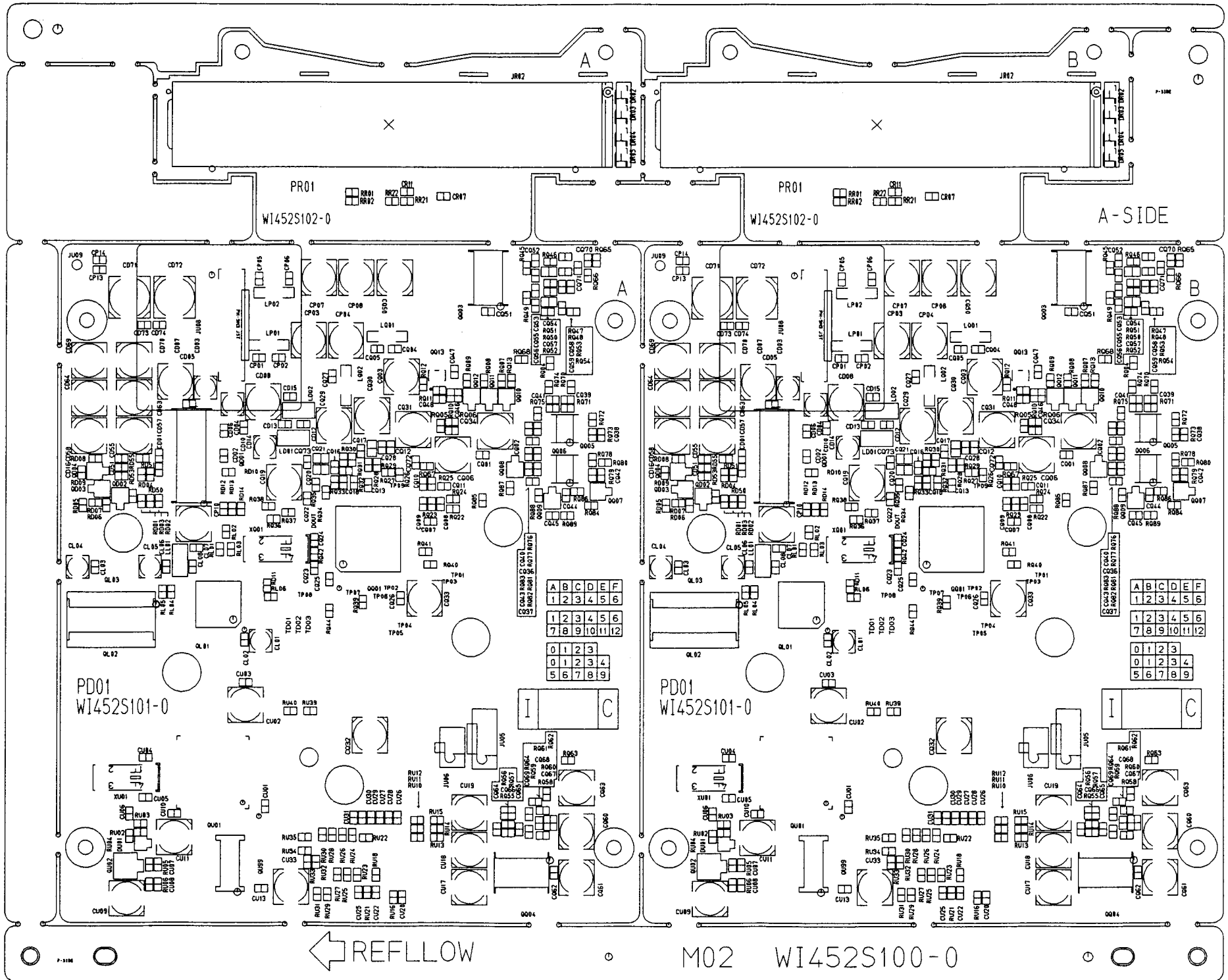

AV事業部　OUTWARD-FORM

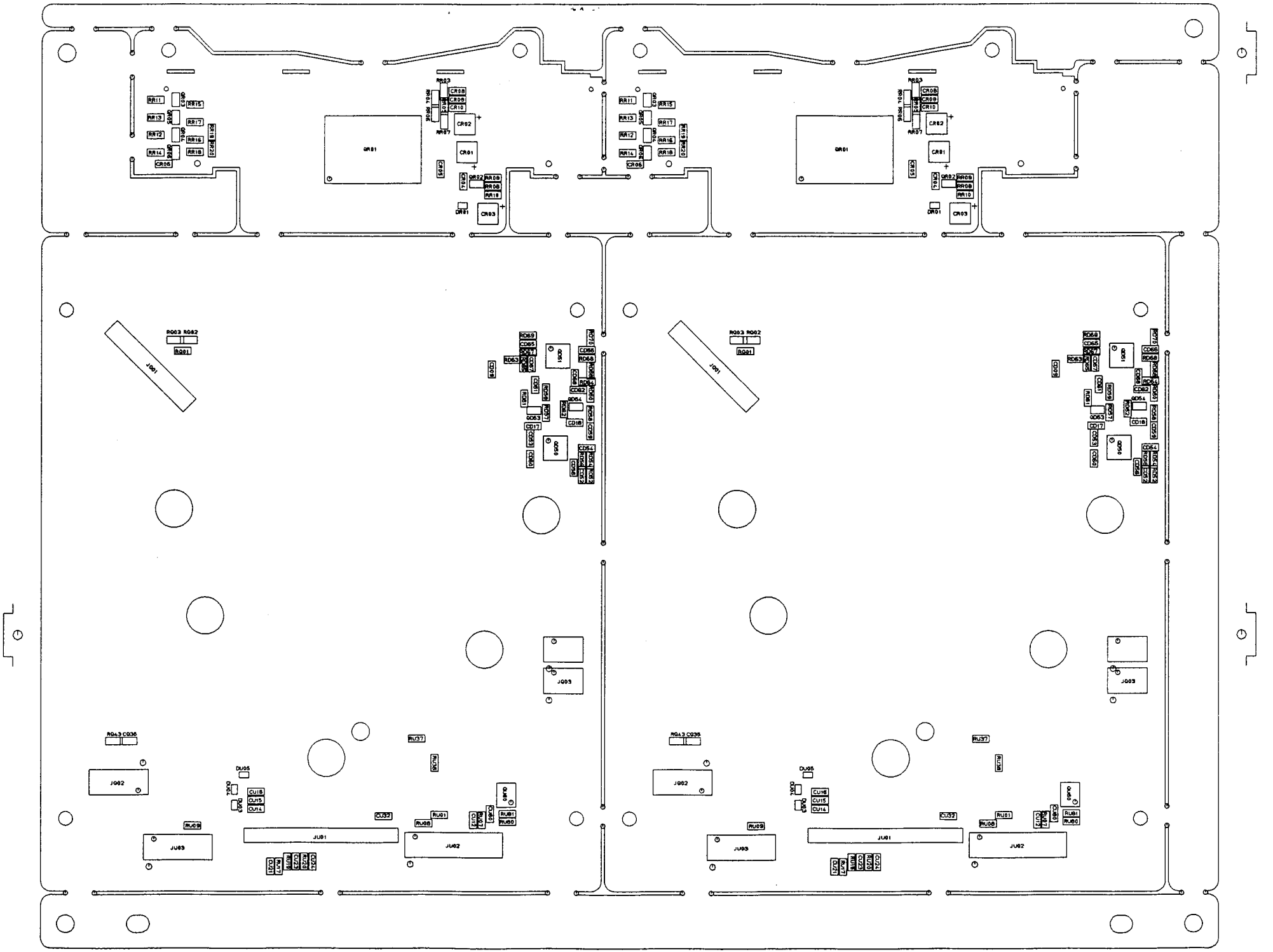

AV事業部 DUTWARDE-FSCRIK

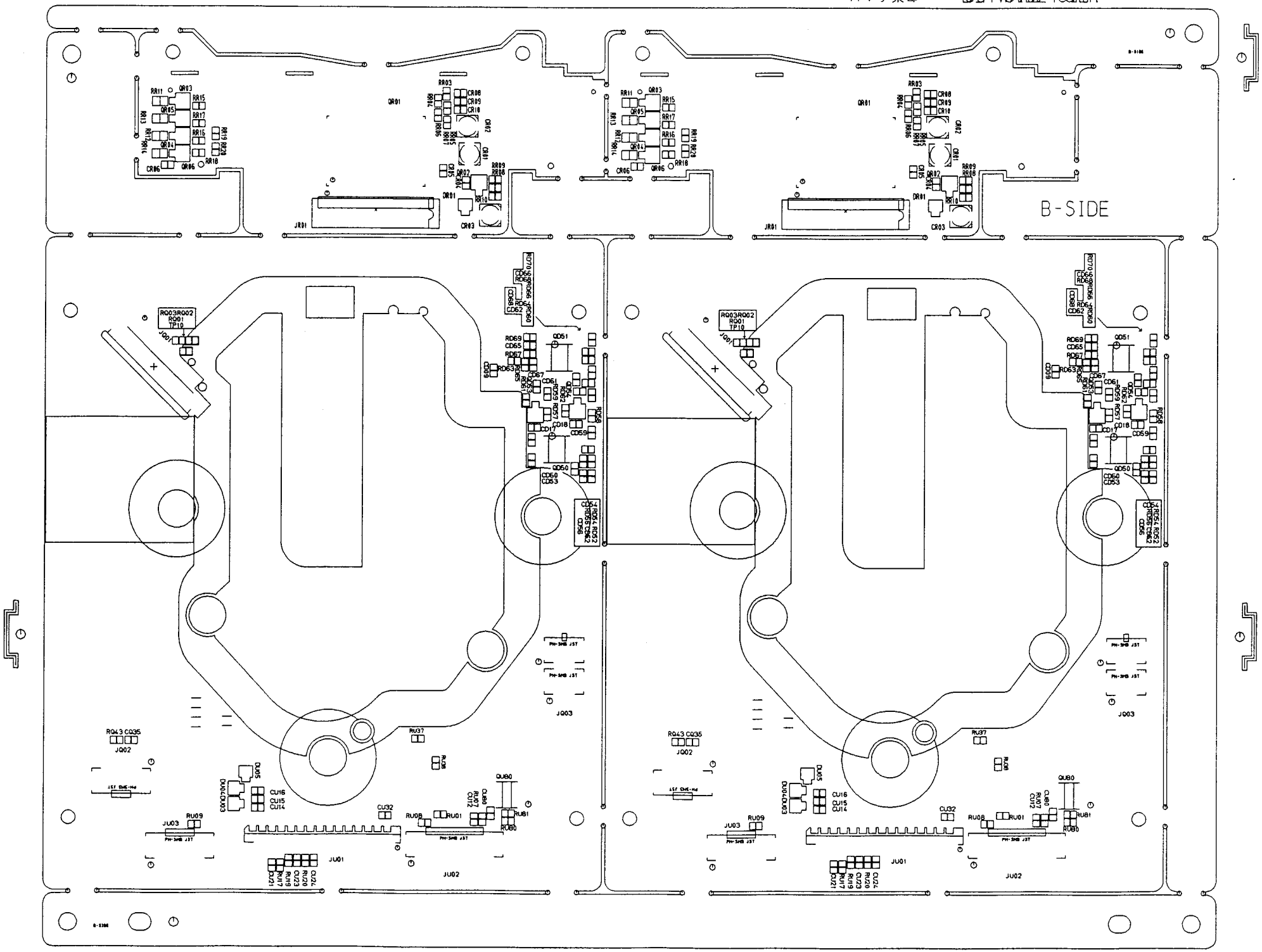
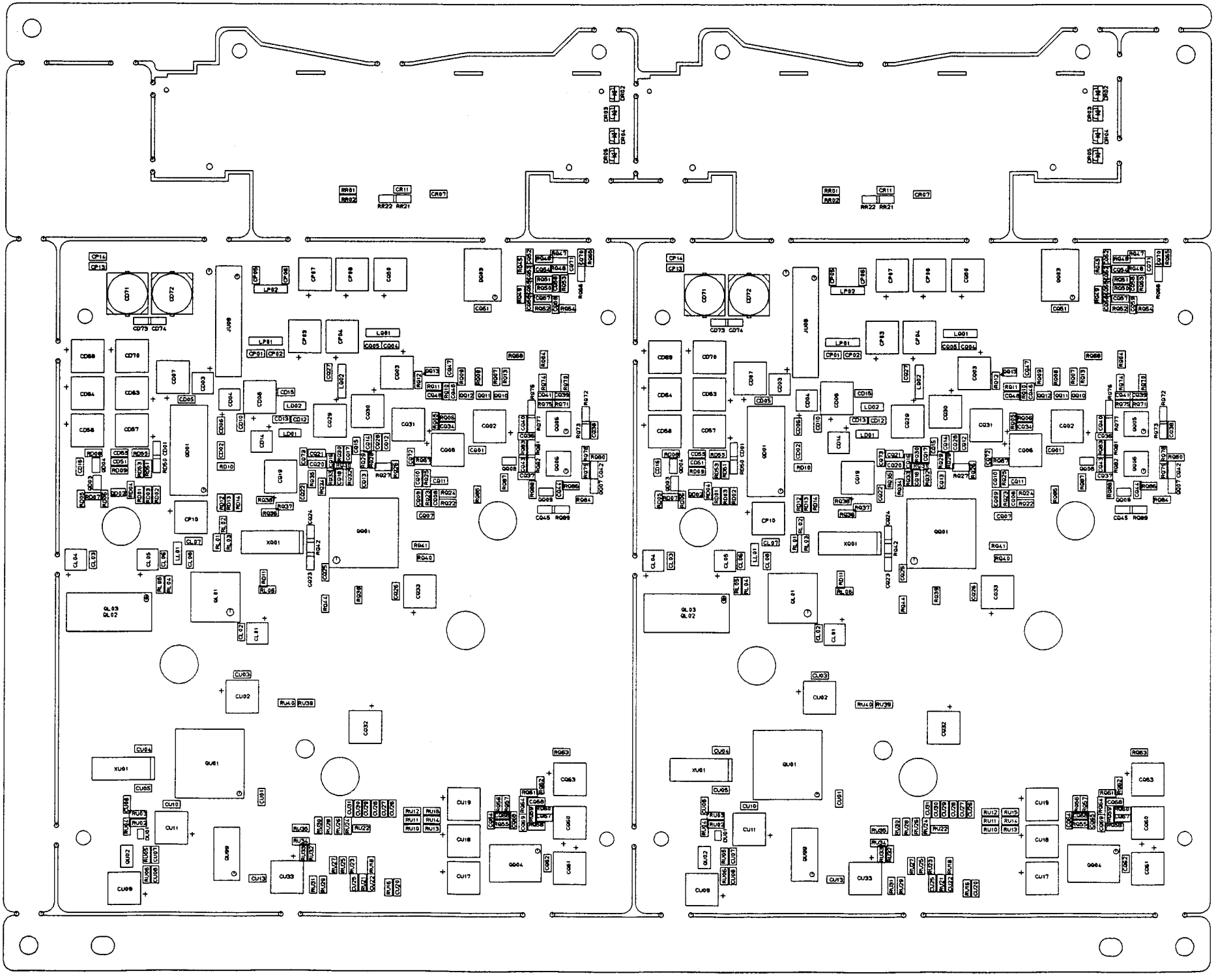
OUTWARD-FORM　　AV事業部