Panasonic
IN-DASH 7 INCH WIDE COLOR LCD TV / DVD - VIDEO / RECEIVER

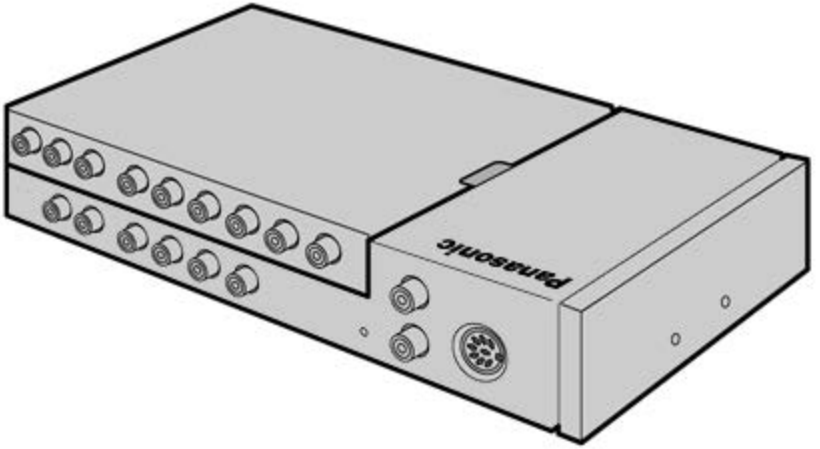
Panasonic

Panasonic
CAR AV

Panasonic

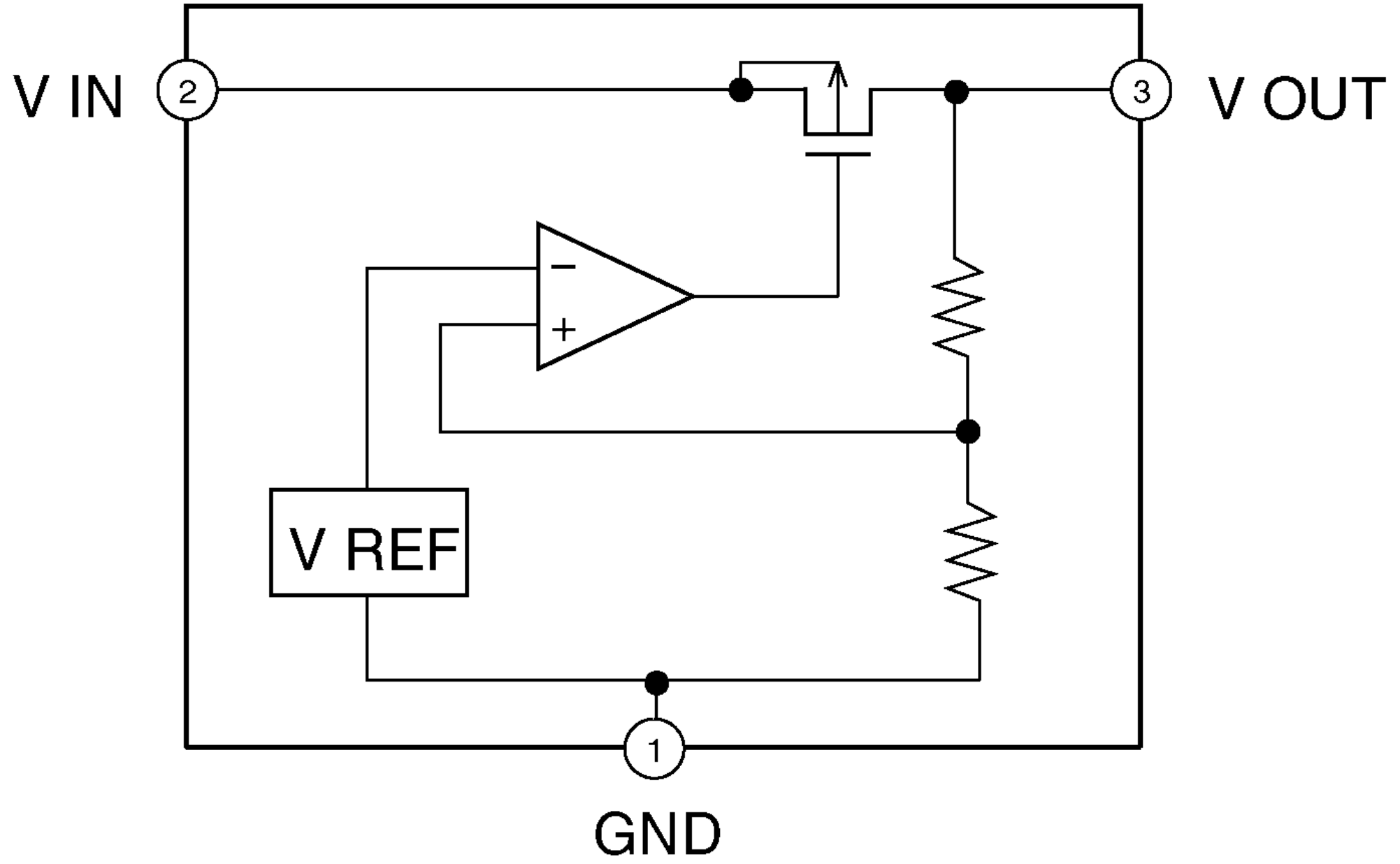
V IN
2
3
V OUT
−
+
V REF
1
GND

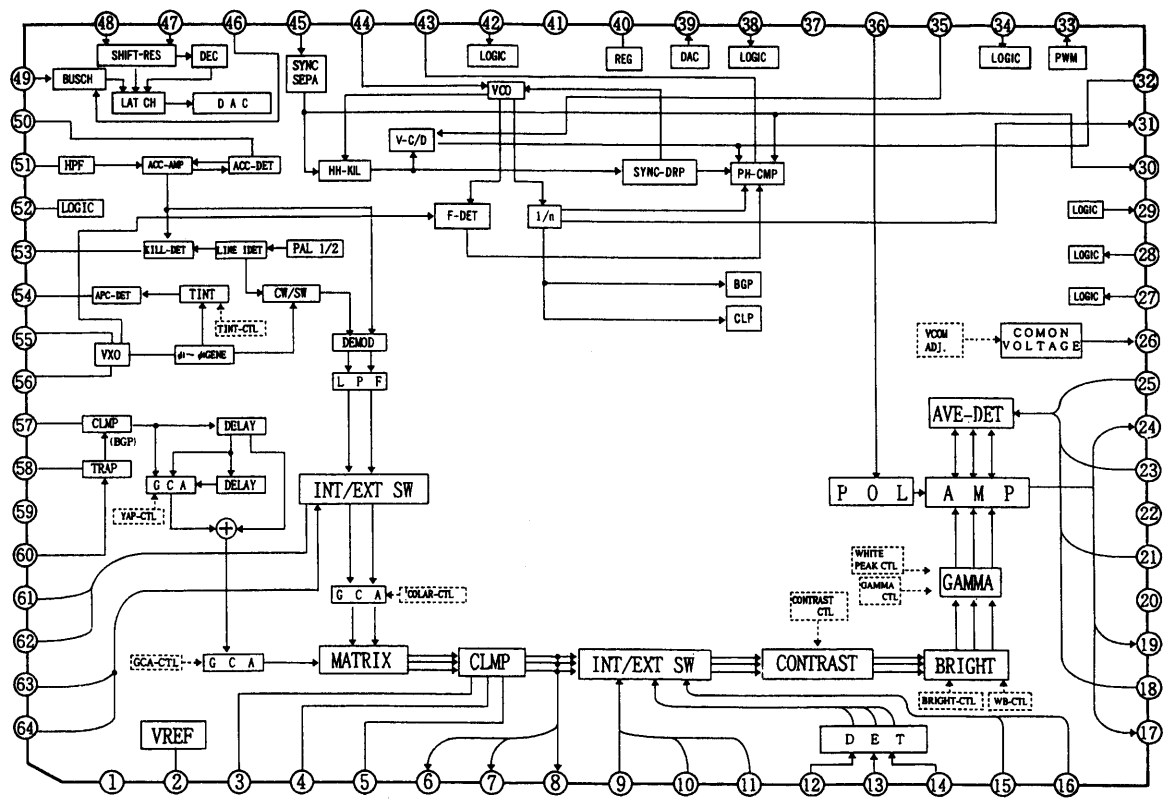
SHIFT-RES
DEC
BUSCH
LAT CH
D A C
SYNC SEPA
LOGIC
REG
DAC
LOGIC
LOGIC
PWM
VCO
V-C/D
HPF
ACC-AMP
ACC-DET
HH-KIL
SYNC-DRP
PH-CMP
LOGIC
F-DET
1/n
LOGIC
KILL-DET
LINE DET
PAL 1/2
LOGIC
LOGIC
APC-DET
TINT
CW/SW
BGP
TINT-CTL
CLP
VXO
φ1~ φ6GENE
DEMOD
VCOM ADJ.
COMON VOLTAGE
L P F
AVE-DET
CLMP
(BGP)
DELAY
TRAP
G C A
DELAY
INT/EXT SW
P O L
A M P
YAP-CTL
WHITE PEAK CTL
GAMMA CTL
GAMMA
G C A
COLAR-CTL
CONTRAST CTL
GCA-CTL
G C A
MATRIX
CLMP
INT/EXT SW
CONTRAST
BRIGHT
BRIGHT-CTL
WB-CTL
VREF
D E T

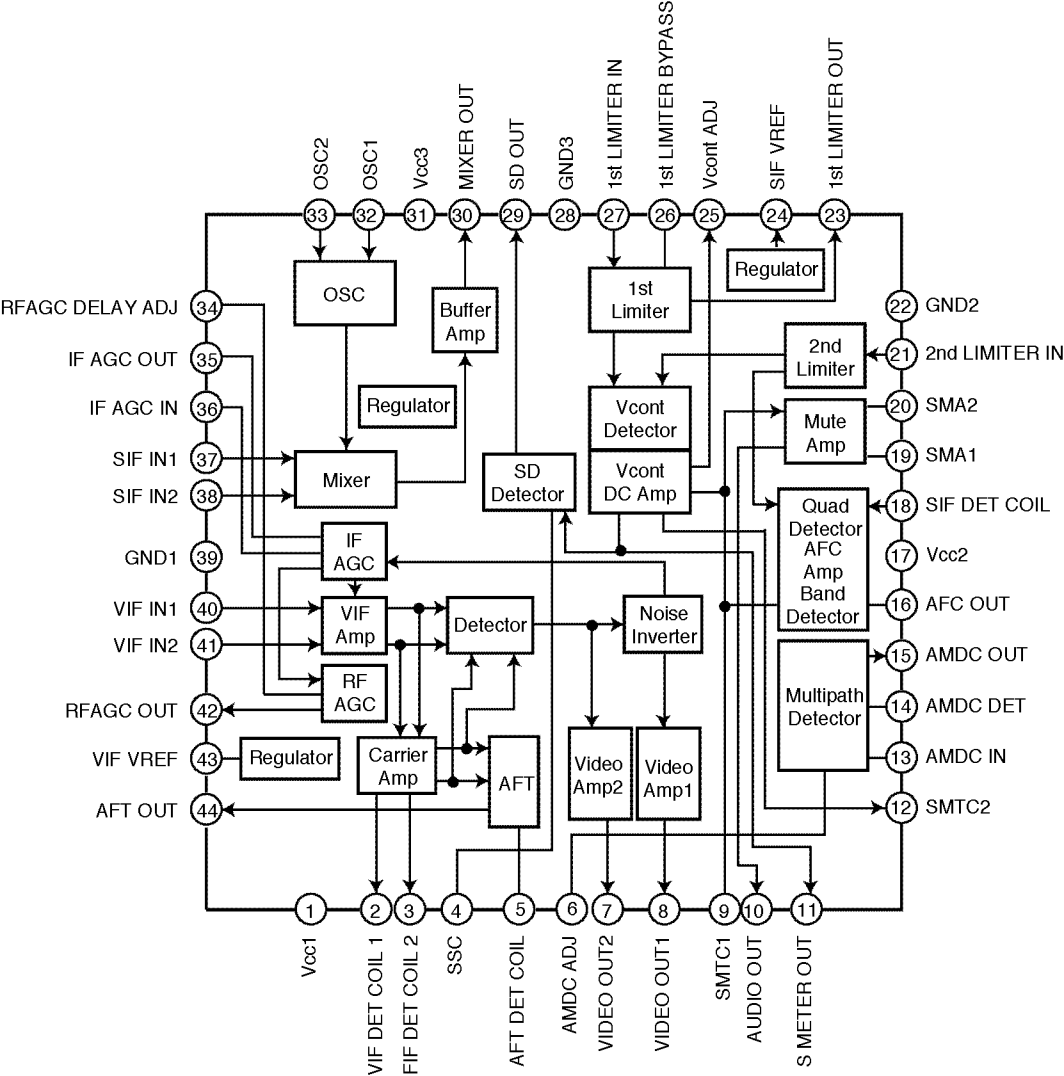
OSC2
OSC1
Vcc3
MIXER OUT
SD OUT
GND3
1st LIMITER IN
1st LIMITER BYPASS
Vcont ADJ
SIF VREF
1st LIMITER OUT
33
32
31
30
29
28
27
26
25
24
23
OSC
Buffer Amp
1st Limiter
Regulator
RFAGC DELAY ADJ
34
IF AGC OUT
35
IF AGC IN
36
SIF IN1
37
SIF IN2
38
GND1
39
VIF IN1
40
VIF IN2
41
RFAGC OUT
42
VIF VREF
43
AFT OUT
44
Regulator
Mixer
SD Detector
Vcont Detector
Vcont DC Amp
2nd Limiter
Mute Amp
Quad Detector AFC Amp Band Detector
IF AGC
VIF Amp
Detector
Noise Inverter
RF AGC
Carrier Amp
AFT
Video Amp2
Video Amp1
Multipath Detector
22
GND2
21
2nd LIMITER IN
20
SMA2
19
SMA1
18
SIF DET COIL
17
Vcc2
16
AFC OUT
15
AMDC OUT
14
AMDC DET
13
AMDC IN
12
SMTC2
1
2
3
4
5
6
7
8
9
10
11
Vcc1
VIF DET COIL 1
FIF DET COIL 2
SSC
AFT DET COIL
AMDC ADJ
VIDEO OUT2
VIDEO OUT1
SMTC1
AUDIO OUT
S METER OUT

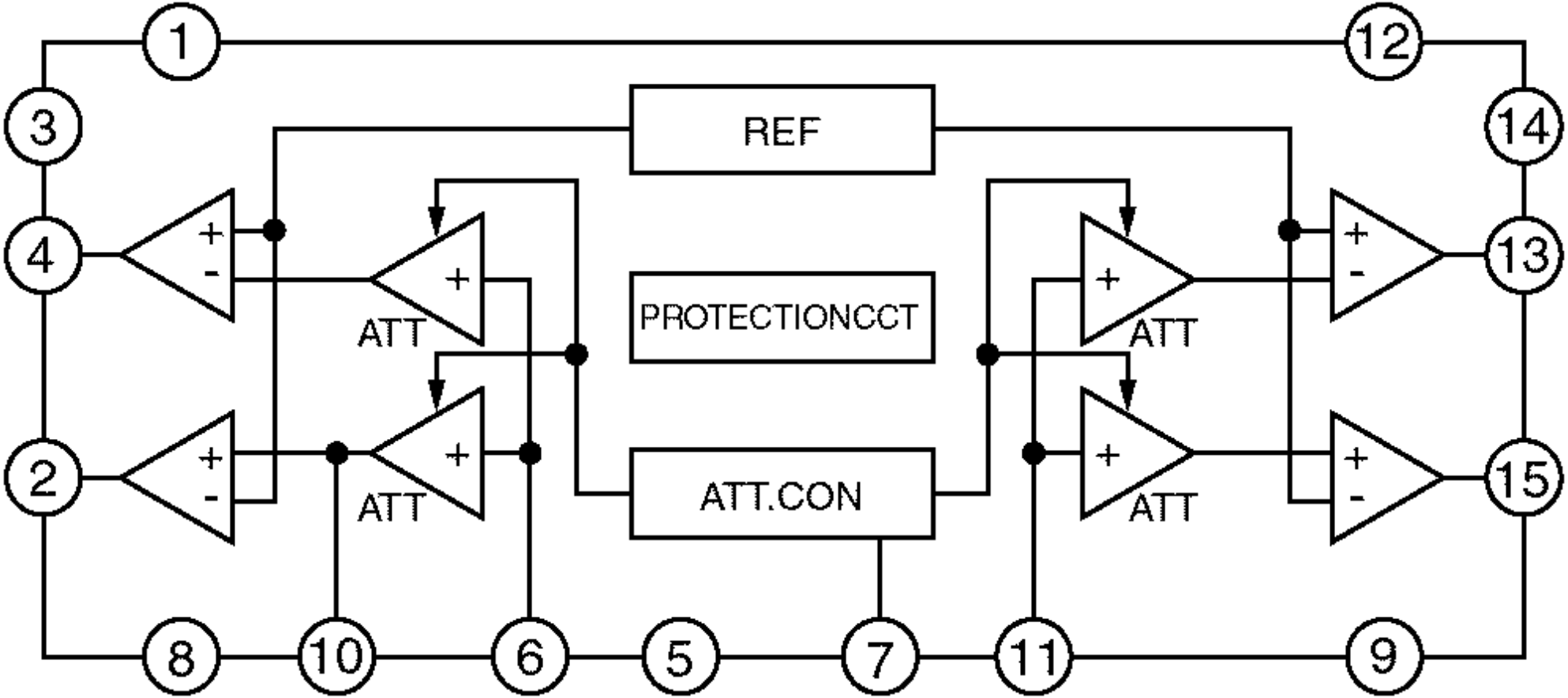
1
12
3
14
REF
4
13
PROTECTIONCCT
ATT
ATT
2
15
ATT.CON
ATT
ATT
8
10
6
5
7
11
9

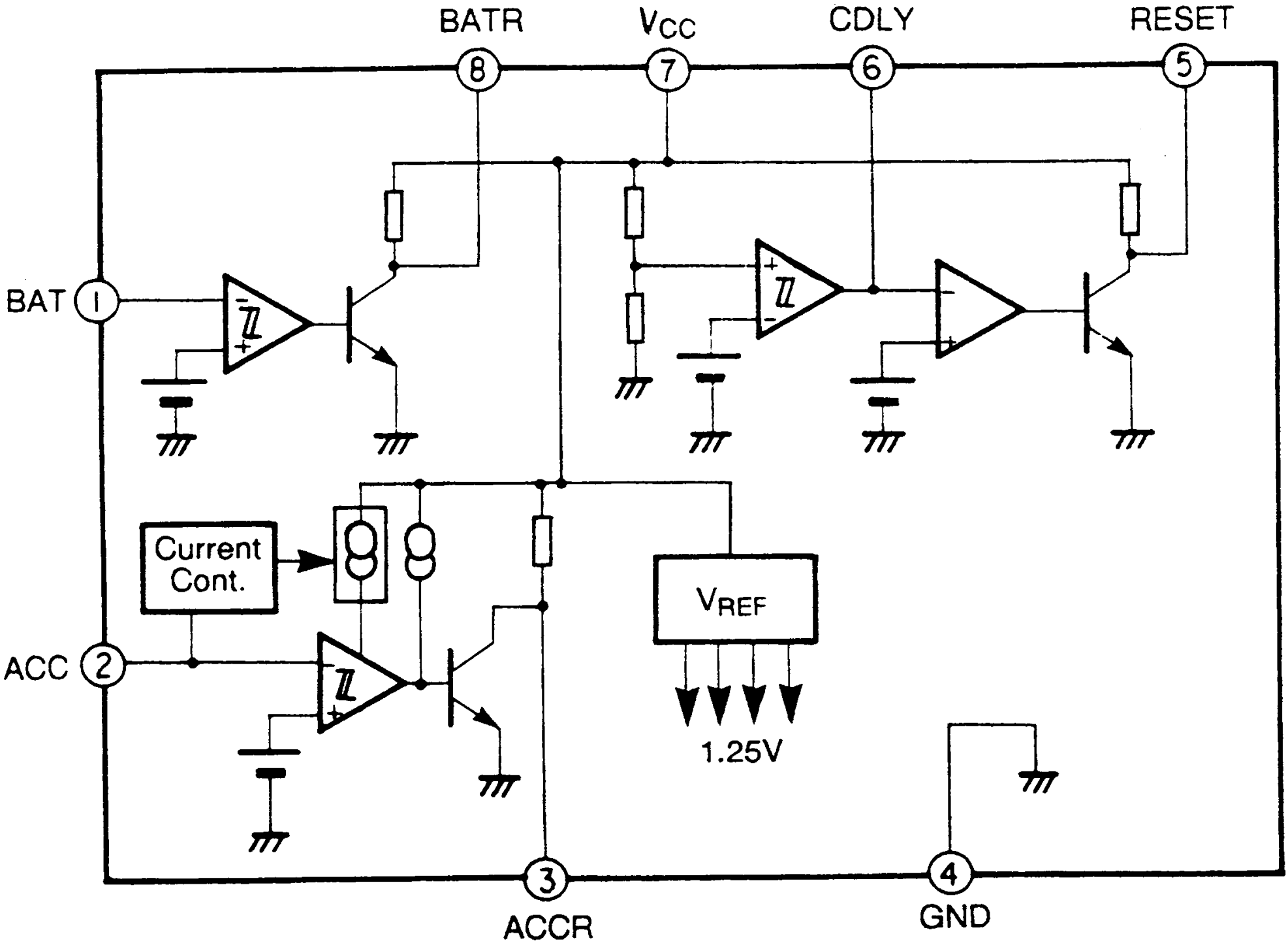
BATR
VCC
CDLY
RESET
8
7
6
5
BAT
1
Current Cont.
VREF
ACC
2
1.25V
3
ACCR
4
GND

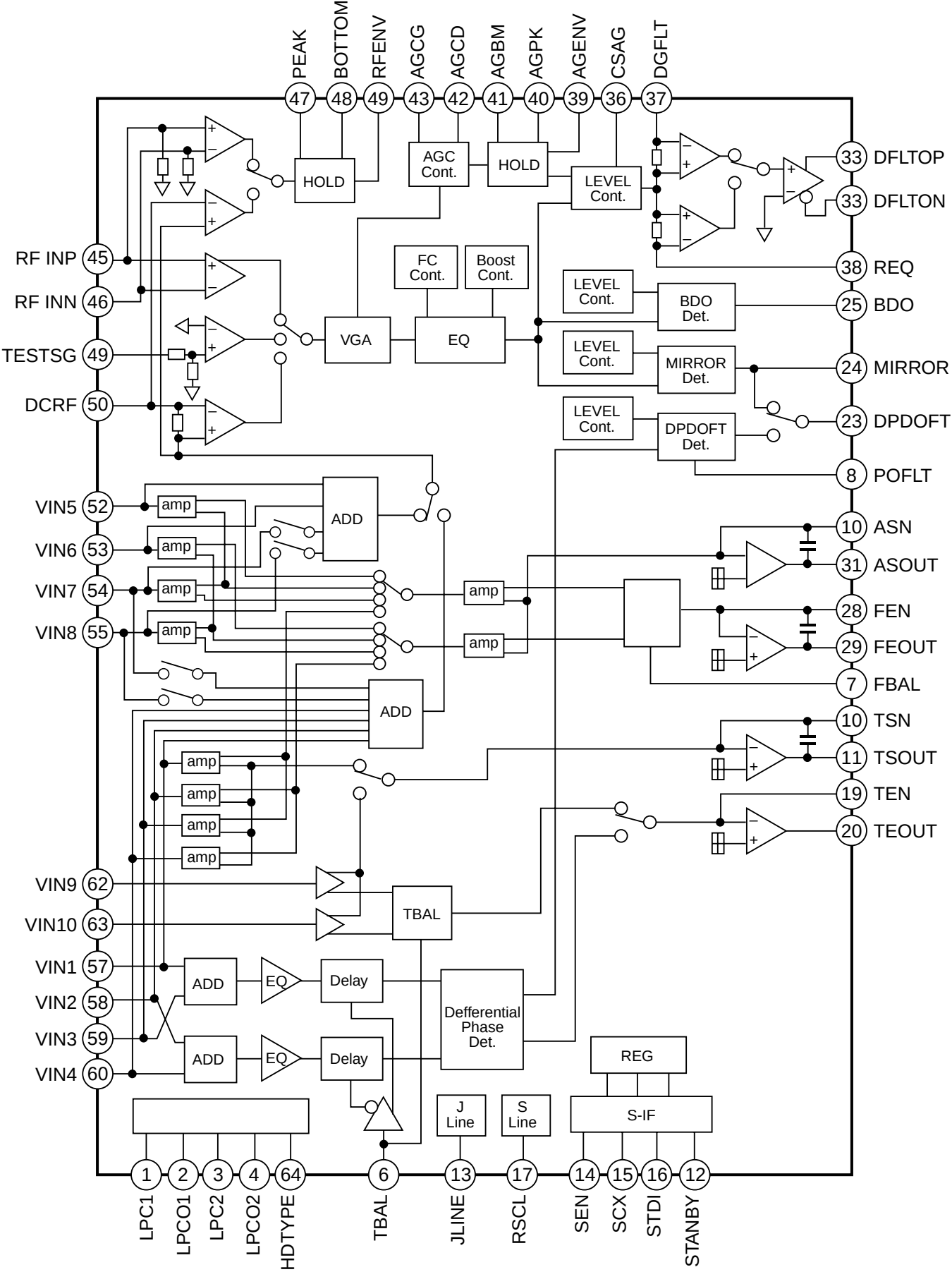
PEAK
BOTTOM
RFENV
AGCG
AGCD
AGBM
AGPK
AGENV
CSAG
DGFLT
47
48
49
43
42
41
40
39
36
37
HOLD
AGC Cont.
HOLD
LEVEL Cont.
33 DFLTOP
33 DFLTON
38 REQ
25 BDO
24 MIRROR
23 DPDOFT
8 POFLT
10 ASN
31 ASOUT
28 FEN
29 FEOUT
7 FBAL
10 TSN
11 TSOUT
19 TEN
20 TEOUT
RF INP 45
RF INN 46
TESTSG 49
DCRF 50
FC Cont.
Boost Cont.
VGA
EQ
LEVEL Cont.
BDO Det.
LEVEL Cont.
MIRROR Det.
LEVEL Cont.
DPDOFT Det.
VIN5 52
VIN6 53
VIN7 54
VIN8 55
amp
ADD
amp
amp
amp
amp
ADD
amp
amp
amp
amp
VIN9 62
VIN10 63
TBAL
VIN1 57
VIN2 58
VIN3 59
VIN4 60
ADD
EQ
Delay
ADD
EQ
Delay
Defferential Phase Det.
REG
J Line
S Line
S-IF
1
2
3
4
64
6
13
17
14
15
16
12
LPC1
LPCO1
LPC2
LPCO2
HDTYPE
TBAL
JLINE
RSCL
SEN
SCX
STDI
STANBY

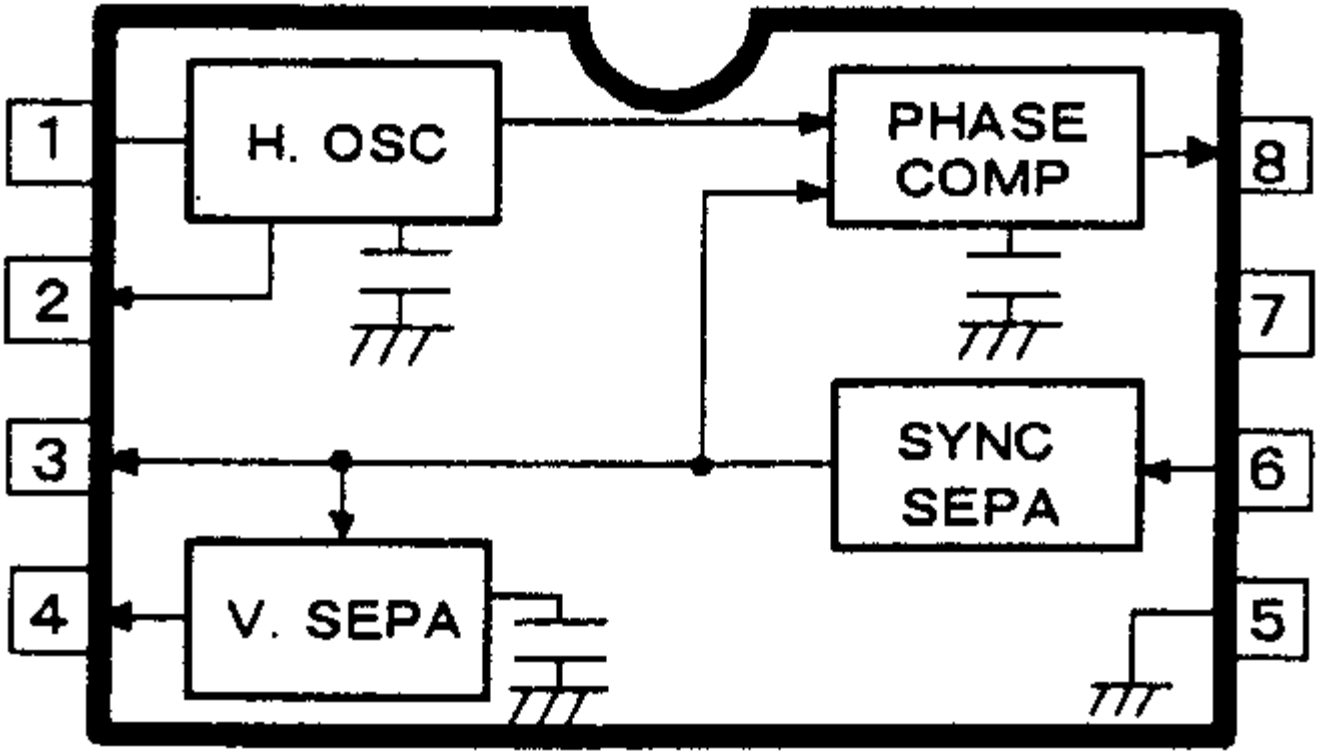
1
2
3
4
H. OSC
V. SEPA
PHASE
COMP
SYNC
SEPA
8
7
6
5

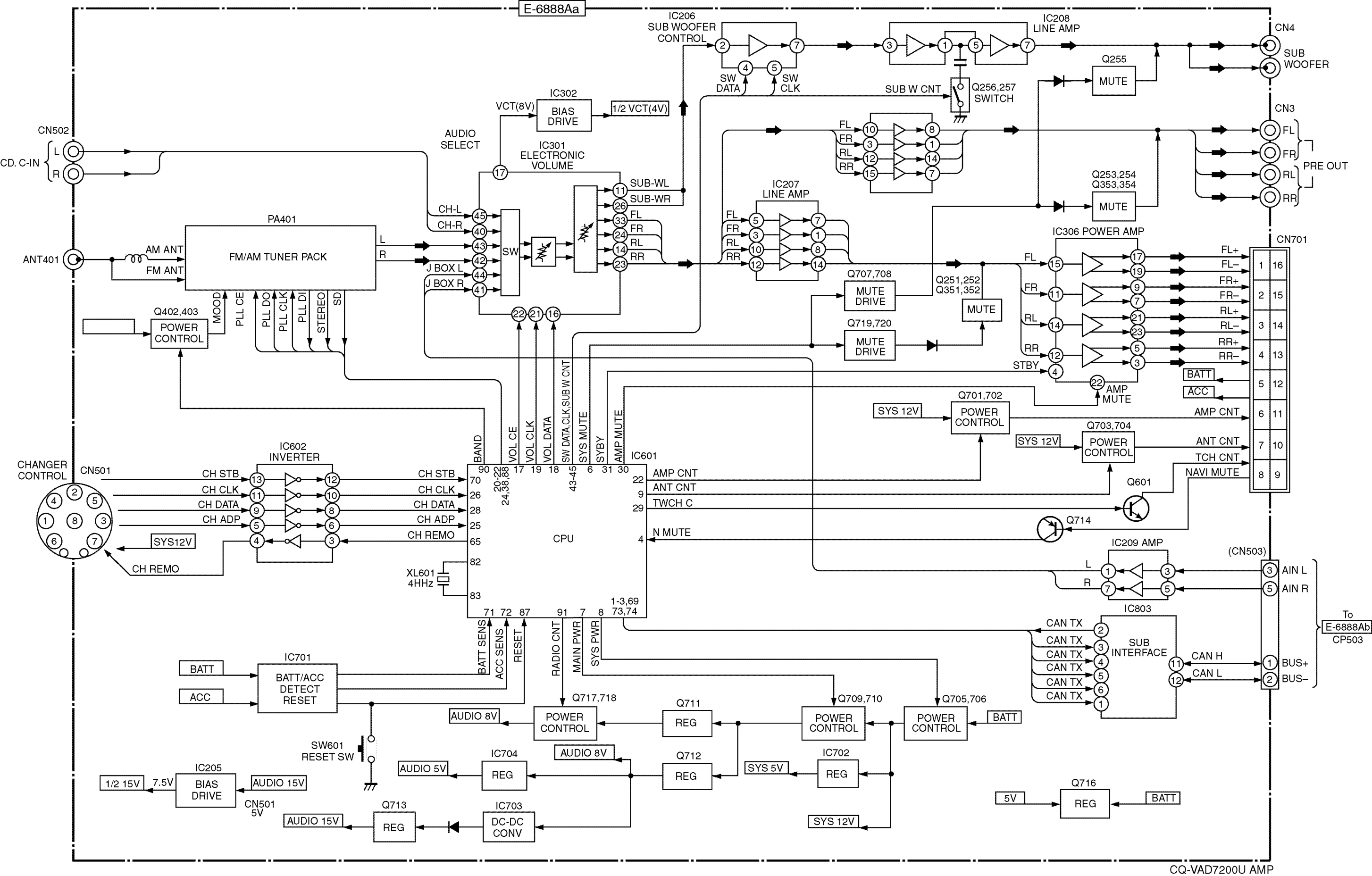
E-6888Aa
IC206
SUB WOOFER
CONTROL
IC208
LINE AMP
CN4
SUB
WOOFER
Q255
MUTE
SW
DATA
SW
CLK
SUB W CNT
Q256,257
SWITCH
IC302
VCT(8V)
BIAS
DRIVE
1/2 VCT(4V)
CN502
CD. C-IN
L
R
AUDIO
SELECT
IC301
ELECTRONIC
VOLUME
CN3
FL
FR
RL
RR
PRE OUT
Q253,254
Q353,354
MUTE
SUB-WL
SUB-WR
CH-L
CH-R
PA401
FM/AM TUNER PACK
AM ANT
FM ANT
ANT401
J BOX L
J BOX R
SW
IC207
LINE AMP
IC306 POWER AMP
CN701
FL+
FL–
FR+
FR–
RL+
RL–
RR+
RR–
Q707,708
MUTE
DRIVE
Q719,720
MUTE
DRIVE
Q251,252
Q351,352
MUTE
STBY
AMP
MUTE
BATT
ACC
MOOD
PLL CE
PLL DO
PLL CLK
PLL DI
STEREO
SD
Q402,403
POWER
CONTROL
BAND
VOL CE
VOL CLK
VOL DATA
SW DATA,CLK,SUB W CNT
SYS MUTE
SYBY
AMP MUTE
SYS 12V
Q701,702
POWER
CONTROL
AMP CNT
Q703,704
POWER
CONTROL
ANT CNT
TCH CNT
NAVI MUTE
Q601
Q714
IC602
INVERTER
CHANGER
CONTROL
CN501
CH STB
CH CLK
CH DATA
CH ADP
CH REMO
SYS12V
IC601
CPU
AMP CNT
ANT CNT
TWCH C
N MUTE
XL601
4HHz
IC209 AMP
(CN503)
AIN L
AIN R
IC803
SUB
INTERFACE
CAN TX
CAN H
CAN L
BUS+
BUS–
To
E-6888Ab
CP503
BATT SENS
ACC SENS
RESET
RADIO CNT
MAIN PWR
SYS PWR
IC701
BATT/ACC
DETECT
RESET
BATT
ACC
Q717,718
POWER
CONTROL
AUDIO 8V
Q711
REG
Q709,710
POWER
CONTROL
Q705,706
POWER
CONTROL
BATT
SW601
RESET SW
IC704
REG
AUDIO 5V
AUDIO 8V
Q712
REG
SYS 5V
IC702
REG
IC205
BIAS
DRIVE
1/2 15V
7.5V
AUDIO 15V
CN501
5V
Q713
REG
AUDIO 15V
IC703
DC-DC
CONV
SYS 12V
Q716
REG
5V
BATT

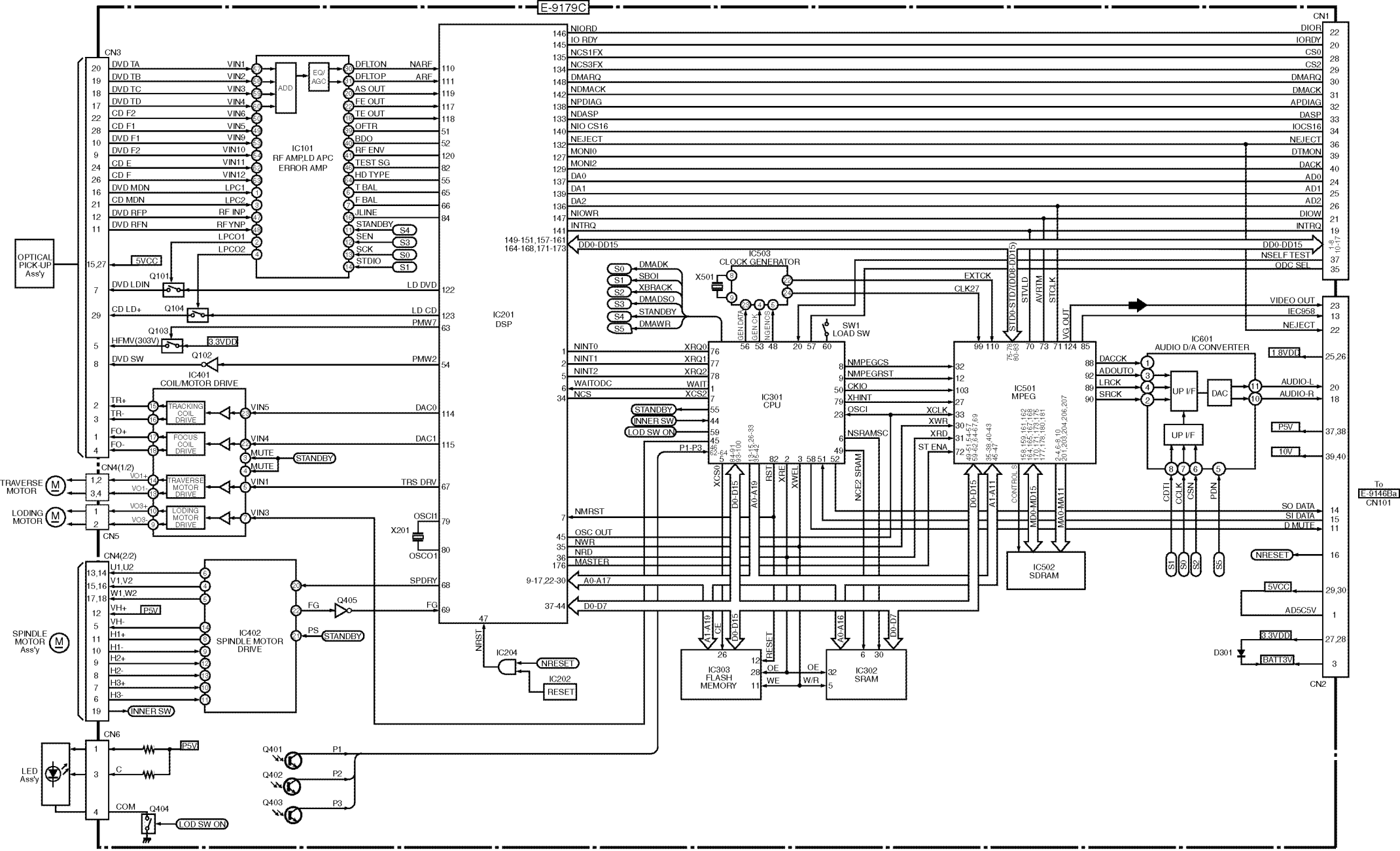
E-9179C
CN3
OPTICAL PICK-UP Ass'y
DVD TA
DVD TB
DVD TC
DVD TD
CD F2
CD F1
DVD F1
DVD F2
CD E
CD F
DVD MDN
CD MDN
DVD RFP
DVD RFN
5VCC
Q101
DVD LDIN
Q104
CD LD+
Q103
HFMV(303V)
3.3VDD
Q102
DVD SW
IC401
COIL/MOTOR DRIVE
TR+
TR-
FO+
FO-
TRACKING COIL DRIVE
FOCUS COIL DRIVE
MUTE
STANDBY
CN4(1/2)
TRAVERSE MOTOR
VO1+
VO1-
TRAVERSE MOTOR DRIVE
LODING MOTOR
VO3+
VO3-
LODING MOTOR DRIVE
CN5
CN4(2/2)
U1,U2
V1,V2
W1,W2
VH+
P5V
VH-
H1+
H1-
H2+
H2-
H3+
H3-
SPINDLE MOTOR Ass'y
IC402
SPINDLE MOTOR DRIVE
INNER SW
CN6
LED Ass'y
C
COM
Q404
LOD SW ON
VIN1
VIN2
VIN3
VIN4
VIN6
VIN5
VIN9
VIN10
VIN11
VIN12
LPC1
LPC2
RF INP
RF YNP
LPCO1
LPCO2
ADD
EQ/ AGC
IC101
RF AMP,LD APC
ERROR AMP
DFLTON
DFLTOP
AS OUT
FE OUT
TE OUT
OFTR
BDO
RF ENV
TEST SG
HD TYPE
T BAL
F BAL
JLINE
STANDBY
SEN
SCK
STDIO
S4
S3
S0
S1
NARF
ARF
LD DVD
LD CD
PMW7
PMW2
DAC0
DAC1
TRS DRV
OSCI1
OSCO1
SPDRY
FG
Q405
PS
IC201
DSP
NIORD
IO RDY
NCS1FX
NCS3FX
DMARQ
NDMACK
NPDIAG
NDASP
NIO CS16
NEJECT
MONI0
MONI2
DA0
DA1
DA2
NIOWR
INTRQ
DD0-DD15
DMADK
SBOI
XBRACK
DMADSO
STANDBY
DMAWR
IC503
CLOCK GENERATOR
X501
GEN DATA
GEN CK
NGENCS
EXTCK
CLK27
SW1
LOAD SW
STD0-STD7(DD8-DD15)
STVLD
AVRTM
STCLK
VG OUT
NINT0
NINT1
NINT2
WAITODC
NCS
XRQ0
XRQ1
XRQ2
WAIT
XCS2
IC301
CPU
STANDBY
INNER SW
LOD SW ON
P1-P3
NMRST
OSC OUT
NWR
NRD
MASTER
A0-A17
D0-D7
XCS0
D0-D15
A0-A19
RST
XRE
XWEL
NCE2 SRAM
NMPEGCS
NMPEGRST
CKIO
XHINT
OSCI
NSRAMSC
XCLK
XWR
XRD
ST ENA
IC501
MPEG
CONTROLS
MD0-MD15
MA0-MA11
IC502
SDRAM
IC601
AUDIO D/A CONVERTER
DACCK
ADOUTO
LRCK
SRCK
UP I/F
DAC
AUDIO-L
AUDIO-R
CDTI
CCLK
CSN
PDN
S1
S0
S2
S5
1.8VDD
P5V
10V
SO DATA
SI DATA
D MUTE
NRESET
5VCC
AD5C5V
3.3VDD
D301
BATT3V
CN2
To E-9146Ba CN101
IC204
NRESET
IC202
RESET
IC303
FLASH MEMORY
A1-A19
CE
OE
WE
IC302
SRAM
A0-A16
W/R
Q401
Q402
Q403
P1
P2
P3
DIOR
IORDY
CS0
CS2
DMARQ
DMACK
APDIAG
DASP
IOCS16
NEJECT
DTMON
DACK
AD0
AD1
AD2
DIOW
INTRQ
DD0-DD15
NSELF TEST
ODC SEL
VIDEO OUT
IEC958
NEJECT

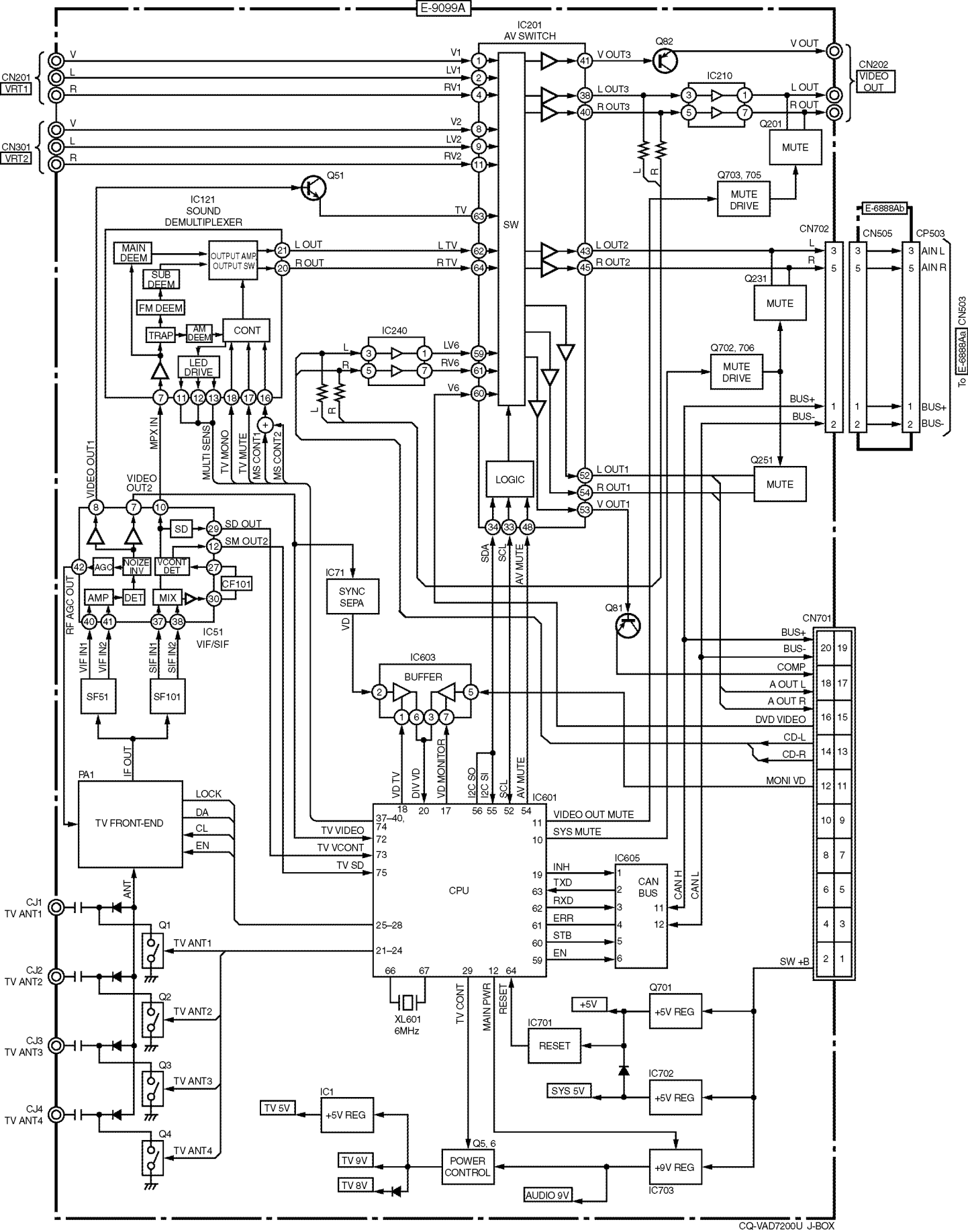
E-9099A
IC201
AV SWITCH
CN201
VRT1
CN301
VRT2
V
L
R
V1
LV1
RV1
V2
LV2
RV2
TV
SW
V OUT3
L OUT3
R OUT3
Q82
V OUT
IC210
L OUT
R OUT
CN202
VIDEO OUT
Q201
MUTE
Q703, 705
MUTE DRIVE
Q51
IC121
SOUND
DEMULTIPLEXER
MAIN DEEM
OUTPUT AMP
OUTPUT SW
SUB DEEM
FM DEEM
TRAP
AM DEEM
CONT
LED DRIVE
L OUT
R OUT
L TV
R TV
L OUT2
R OUT2
E-6888Ab
CN702
CN505
CP503
AIN L
AIN R
Q231
MUTE
IC240
LV6
RV6
V6
Q702, 706
MUTE DRIVE
BUS+
BUS-
To E-6888Aa CN503
MPX IN
MULTI SENS
TV MONO
TV MUTE
MS CONT1
MS CONT2
LOGIC
L OUT1
R OUT1
V OUT1
Q251
MUTE
VIDEO OUT1
VIDEO OUT2
SD
SD OUT
SM OUT2
AGC
NOIZE INV
VCONT DET
CF101
AMP
DET
MIX
RF AGC OUT
IC51
VIF/SIF
VIF IN1
VIF IN2
SIF IN1
SIF IN2
SF51
SF101
IC71
SYNC SEPA
VD
SDA
SCL
AV MUTE
Q81
IC603
BUFFER
CN701
BUS+
BUS-
COMP
A OUT L
A OUT R
DVD VIDEO
CD-L
CD-R
MONI VD
VD TV
DIV VD
VD MONITOR
I2C SO
I2C SI
IC601
PA1
IF OUT
TV FRONT-END
LOCK
DA
CL
EN
TV VIDEO
TV VCONT
TV SD
CPU
VIDEO OUT MUTE
SYS MUTE
IC605
CAN BUS
INH
TXD
RXD
ERR
STB
EN
CAN H
CAN L
SW +B
ANT
CJ1
TV ANT1
CJ2
TV ANT2
CJ3
TV ANT3
CJ4
TV ANT4
Q1
Q2
Q3
Q4
XL601
6MHz
TV CONT
MAIN PWR
RESET
+5V
Q701
+5V REG
IC701
RESET
IC702
+5V REG
SYS 5V
IC1
+5V REG
TV 5V
Q5, 6
POWER CONTROL
TV 9V
TV 8V
+9V REG
IC703
AUDIO 9V
CQ-VAD7200U J-BOX

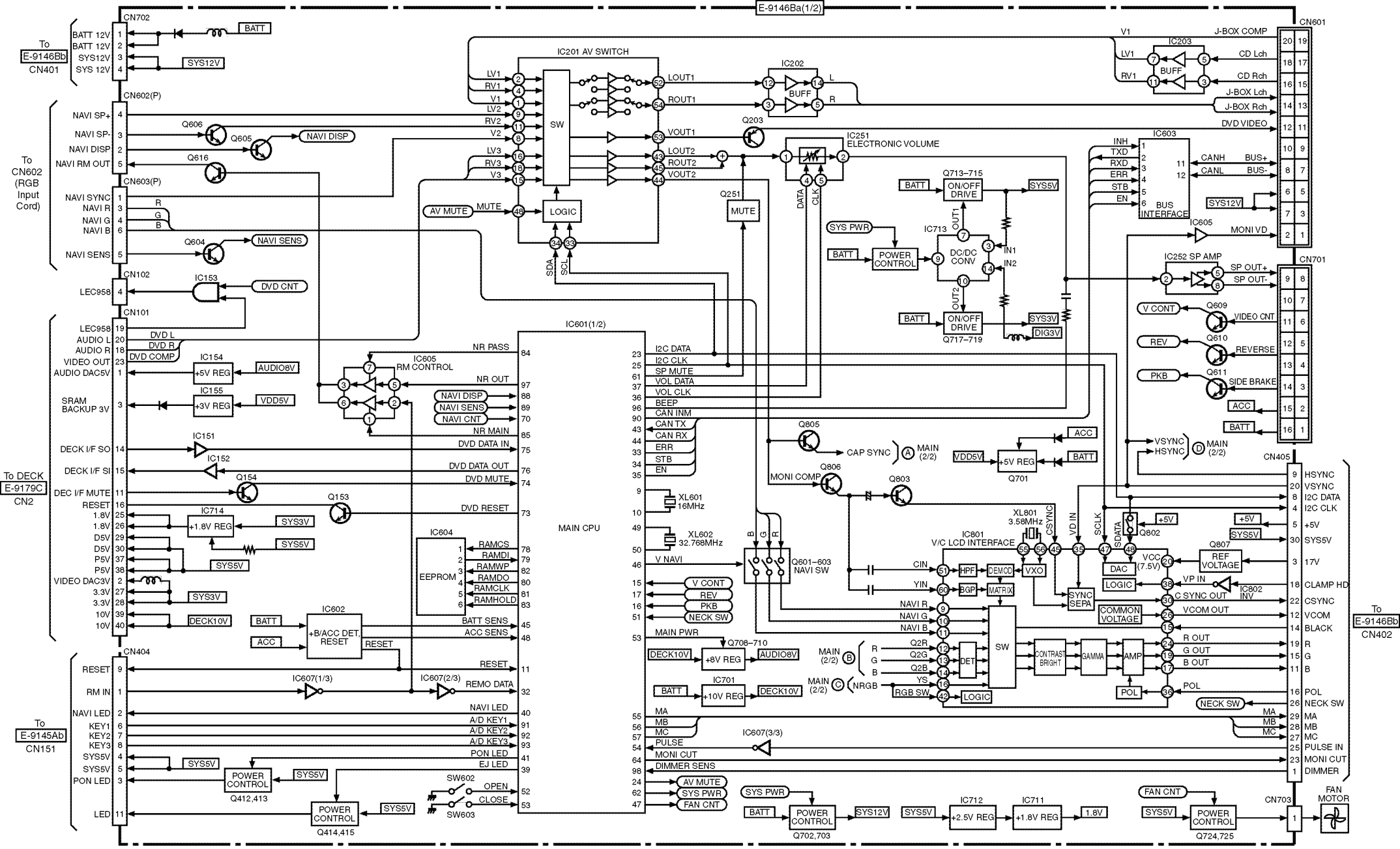
E-9146Ba(1/2)
CN702
BATT 12V
BATT 12V
SYS12V
SYS 12V
BATT
SYS12V
To E-9146Bb CN401
CN602(P)
NAVI SP+
NAVI SP-
NAVI DISP
NAVI RM OUT
Q606
Q605
Q616
NAVI DISP
To CN602 (RGB Input Cord)
CN603(P)
NAVI SYNC
NAVI R
NAVI G
NAVI B
NAVI SENS
Q604
NAVI SENS
CN102
LEC958
IC153
DVD CNT
CN101
LEC958
AUDIO L
AUDIO R
VIDEO OUT
AUDIO DAC5V
SRAM BACKUP 3V
DVD L
DVD R
DVD COMP
IC154
+5V REG
AUDIO8V
IC155
+3V REG
VDD5V
DECK I/F SO
DECK I/F SI
DEC I/F MUTE
RESET
1.8V
D5V
P5V
VIDEO DAC3V
3.3V
10V
IC151
IC152
Q154
Q153
IC714
+1.8V REG
SYS3V
SYS5V
DECK10V
To DECK E-9179C CN2
IC201 AV SWITCH
SW
LOGIC
LV1
RV1
V1
LV2
RV2
V2
LV3
RV3
V3
AV MUTE
MUTE
SDA
SCL
LOUT1
ROUT1
VOUT1
LOUT2
ROUT2
VOUT2
IC202
BUFF
L
R
Q203
Q251
MUTE
IC251 ELECTRONIC VOLUME
DATA
CLK
IC601(1/2)
MAIN CPU
NR PASS
IC605 RM CONTROL
NR OUT
NAVI DISP
NAVI SENS
NAVI CNT
NR MAIN
DVD DATA IN
DVD DATA OUT
DVD MUTE
DVD RESET
IC604
EEPROM
RAMCS
RAMDI
RAMWP
RAMDO
RAMCLK
RAMHOLD
IC602
+B/ACC DET, RESET
BATT
ACC
BATT SENS
ACC SENS
RESET
I2C DATA
I2C CLK
SP MUTE
VOL DATA
VOL CLK
BEEP
CAN INM
CAN TX
CAN RX
ERR
STB
EN
XL601 16MHz
XL602 32.768MHz
V NAVI
V CONT
REV
PKB
NECK SW
MAIN PWR
Q708–710
DECK10V
+8V REG
AUDIO8V
IC701
+10V REG
DECK10V
Q601–603 NAVI SW
NAVI R
NAVI G
NAVI B
MAIN (2/2) B
MAIN (2/2) C
NRGB
RGB SW
LOGIC
Q2R
Q2G
Q2B
YS
DET
SW
CONTRAST BRIGHT
GAMMA
AMP
POL
IC607(1/3)
IC607(2/3)
REMO DATA
NAVI LED
A/D KEY1
A/D KEY2
A/D KEY3
PON LED
EJ LED
MA
MB
MC
PULSE
MONI CUT
DIMMER SENS
IC607(3/3)
AV MUTE
SYS PWR
FAN CNT
CN404
RESET
RM IN
NAVI LED
KEY1
KEY2
KEY3
SYS5V
PON LED
LED
To E-9145Ab CN151
POWER CONTROL
Q412,413
Q414,415
SW602
SW603
OPEN
CLOSE
Q702,703
IC712
+2.5V REG
IC711
+1.8V REG
1.8V
Q724,725
CN703
FAN MOTOR
IC203
BUFF
J-BOX COMP
CD Lch
CD Rch
J-BOX Lch
J-BOX Rch
DVD VIDEO
CN601
IC603
BUS INTERFACE
INH
TXD
RXD
ERR
STB
EN
CANH
CANL
BUS+
BUS-
IC605
MONI VD
Q713–715
ON/OFF DRIVE
IC713
DC/DC CONV
POWER CONTROL
OUT1
OUT2
IN1
IN2
Q717–719
DIG3V
IC252 SP AMP
SP OUT+
SP OUT-
V CONT
VIDEO CNT
Q609
REV
REVERSE
Q610
PKB
SIDE BRAKE
Q611
ACC
BATT
CN701
Q805
CAP SYNC
MAIN (2/2)
Q806
MONI COMP
Q803
VDD5V
+5V REG
Q701
VSYNC
HSYNC
MAIN (2/2)
CN405
HSYNC
VSYNC
I2C DATA
I2C CLK
+5V
SYS5V
17V
CLAMP HD
CSYNC
VCOM
BLACK
R
G
B
POL
NECK SW
MA
MB
MC
PULSE IN
MONI CUT
DIMMER
To E-9146Bb CN402
XL801 3.58MHz
IC801 V/C LCD INTERFACE
CIN
YIN
HPF
BGP
DEMOD
MATRIX
VXO
CSYNC
VD IN
SCLK
SDATA
Q802
DAC
LOGIC
VCC (7.5V)
REF VOLTAGE
Q807
VP IN
IC802 INV
C SYNC OUT
VCOM OUT
SYNC SEPA
COMMON VOLTAGE
R OUT
G OUT
B OUT
CQ-VAD7200U MAIN1/2

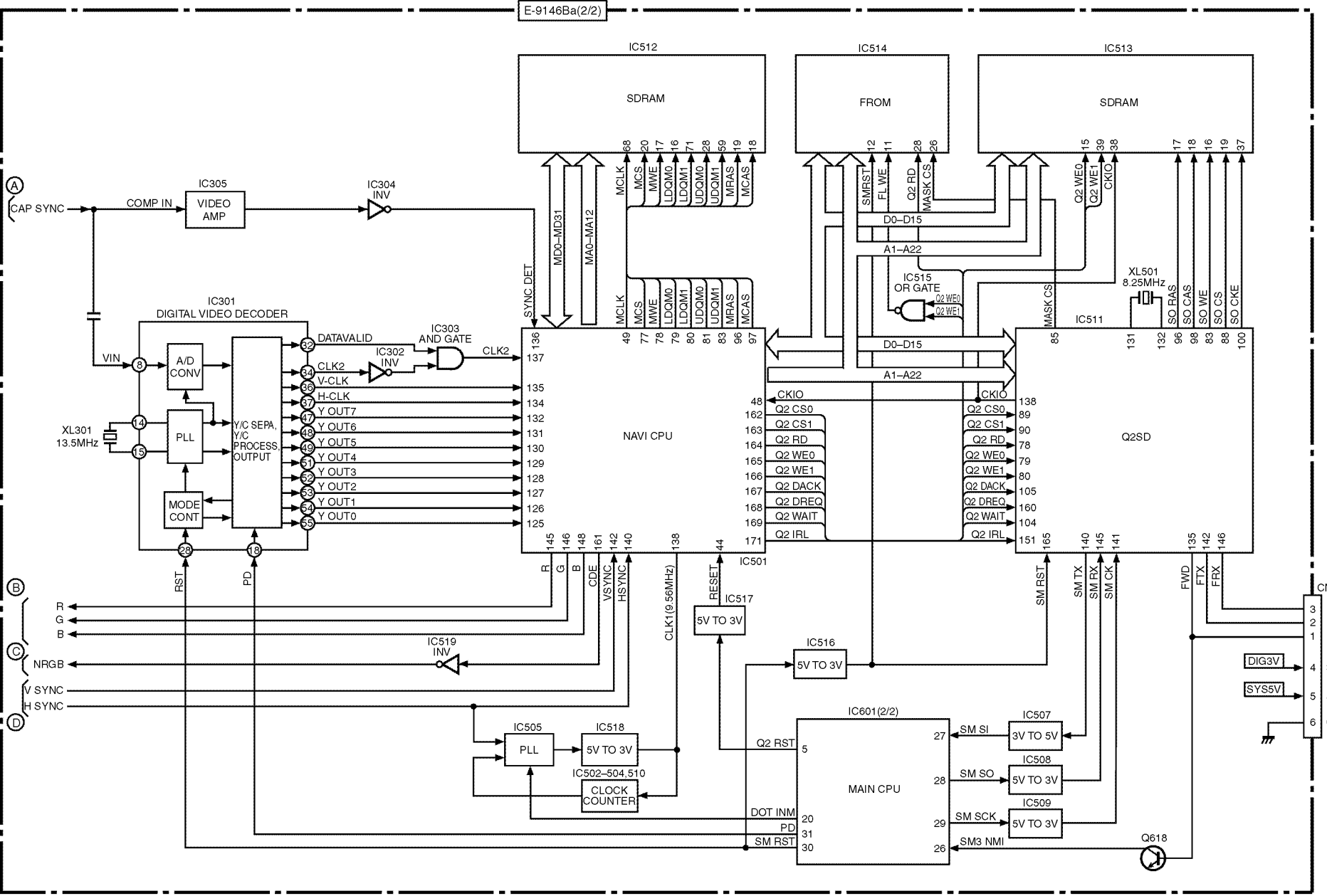
E-9146Ba(2/2)
IC512
SDRAM
IC514
FROM
IC513
SDRAM
A
CAP SYNC
COMP IN
IC305
VIDEO AMP
IC304 INV
MD0–MD31
MA0–MA12
SYNC DET
MCLK
MCS
MWE
LDQM0
LDQM1
UDQM0
UDQM1
MRAS
MCAS
SMRST
FL WE
Q2 RD
MASK CS
Q2 WE0
Q2 WE1
CKIO
D0–D15
A1–A22
IC515 OR GATE
XL501 8.25MHz
SO RAS
SO CAS
SO WE
SO CS
SO CKE
IC511
IC301 DIGITAL VIDEO DECODER
VIN
A/D CONV
PLL
XL301 13.5MHz
MODE CONT
Y/C SEPA, Y/C PROCESS, OUTPUT
DATAVALID
IC303 AND GATE
IC302 INV
CLK2
V-CLK
H-CLK
Y OUT7
Y OUT6
Y OUT5
Y OUT4
Y OUT3
Y OUT2
Y OUT1
Y OUT0
NAVI CPU
Q2SD
Q2 CS0
Q2 CS1
Q2 RD
Q2 WE0
Q2 WE1
Q2 DACK
Q2 DREQ
Q2 WAIT
Q2 IRL
IC501
RST
PD
R
G
B
CDE
VSYNC
HSYNC
CLK1(9.56MHz)
RESET
IC517
5V TO 3V
B
R
G
B
C
NRGB
IC519 INV
V SYNC
H SYNC
D
IC516
5V TO 3V
SM RST
SM TX
SM RX
SM CK
FWD
FTX
FRX
CN500
FRX
FTX
FWD
DIG3V
3V
SYS5V
5V
GND
IC505
PLL
IC518
5V TO 3V
IC502–504,510
CLOCK COUNTER
IC601(2/2)
MAIN CPU
Q2 RST
DOT INM
PD
SM RST
SM SI
SM SO
SM SCK
SM3 NMI
IC507
3V TO 5V
IC508
5V TO 3V
IC509
5V TO 3V
Q618

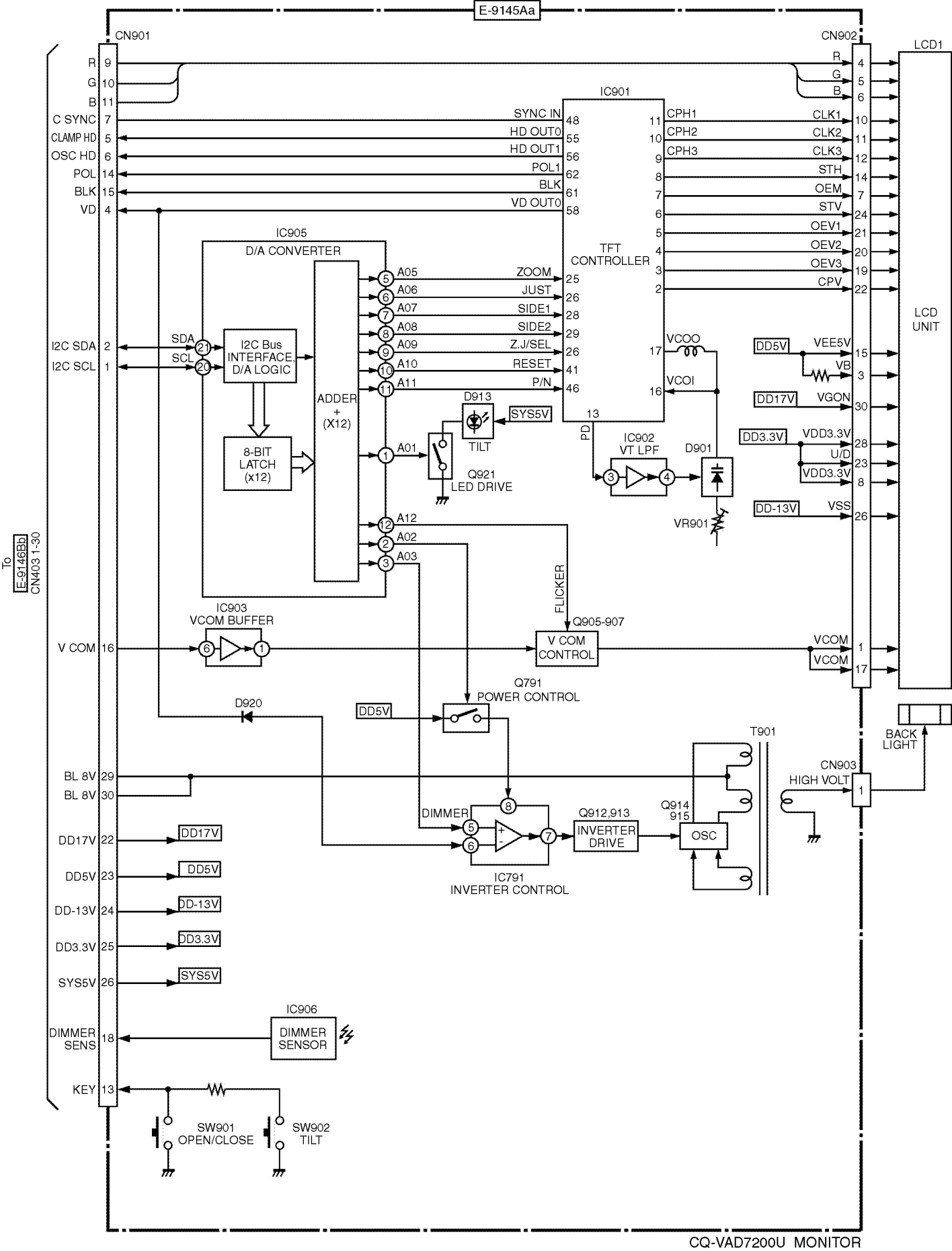
E-9145Aa
CN901
CN902
LCD1
LCD UNIT
IC901
TFT CONTROLLER
SYNC IN
HD OUT0
HD OUT1
POL1
BLK
VD OUT0
CPH1
CPH2
CPH3
CLK1
CLK2
CLK3
STH
OEM
STV
OEV1
OEV2
OEV3
CPV
R
G
B
C SYNC
CLAMP HD
OSC HD
POL
BLK
VD
IC905
D/A CONVERTER
I2C Bus INTERFACE, D/A LOGIC
8-BIT LATCH (x12)
ADDER + (X12)
SDA
SCL
I2C SDA
I2C SCL
A05
A06
A07
A08
A09
A10
A11
A01
A12
A02
A03
ZOOM
JUST
SIDE1
SIDE2
Z.J/SEL
RESET
P/N
D913
SYS5V
TILT
Q921
LED DRIVE
PD
IC902
VT LPF
D901
VR901
VCOO
VCOI
DD5V
VEE5V
VB
DD17V
VGON
DD3.3V
VDD3.3V
U/D
DD-13V
VSS
To E-9146Bb CN403 1-30
IC903
VCOM BUFFER
V COM
FLICKER
Q905-907
V COM CONTROL
VCOM
Q791
POWER CONTROL
D920
BL 8V
DD17V
DD5V
DD-13V
DD3.3V
SYS5V
DIMMER
IC791
INVERTER CONTROL
Q912,913
INVERTER DRIVE
Q914
915
OSC
T901
CN903
HIGH VOLT
BACK LIGHT
IC906
DIMMER SENSOR
DIMMER SENS
KEY
SW901
OPEN/CLOSE
SW902
TILT

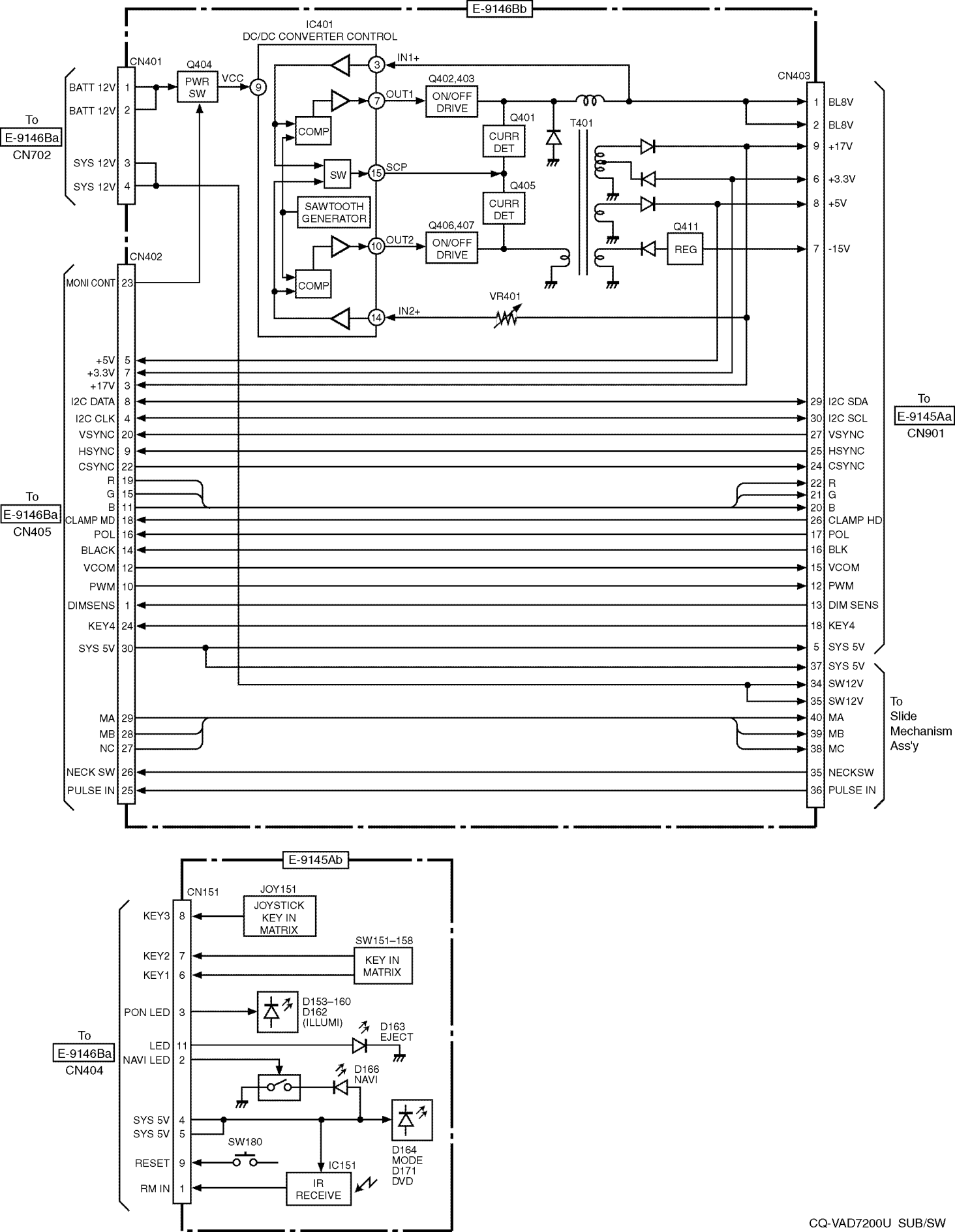
E-9146Bb
IC401
DC/DC CONVERTER CONTROL
CN401
Q404
PWR SW
VCC
IN1+
OUT1
Q402,403
ON/OFF DRIVE
Q401
CURR DET
T401
CN403
BL8V
BL8V
+17V
+3.3V
+5V
-15V
Q411
REG
COMP
SW
SCP
Q405
CURR DET
SAWTOOTH GENERATOR
Q406,407
ON/OFF DRIVE
OUT2
COMP
IN2+
VR401
To
E-9146Ba
CN702
BATT 12V
BATT 12V
SYS 12V
SYS 12V
CN402
MONI CONT
+5V
+3.3V
+17V
I2C DATA
I2C CLK
VSYNC
HSYNC
CSYNC
R
G
B
CLAMP MD
POL
BLACK
VCOM
PWM
DIMSENS
KEY4
SYS 5V
To
E-9146Ba
CN405
MA
MB
NC
NECK SW
PULSE IN
I2C SDA
I2C SCL
VSYNC
HSYNC
CSYNC
R
G
B
CLAMP HD
POL
BLK
VCOM
PWM
DIM SENS
KEY4
SYS 5V
To
E-9145Aa
CN901
SYS 5V
SW12V
SW12V
MA
MB
MC
NECKSW
PULSE IN
To
Slide
Mechanism
Ass'y
E-9145Ab
CN151
JOY151
JOYSTICK KEY IN MATRIX
KEY3
SW151–158
KEY IN MATRIX
KEY2
KEY1
PON LED
D153–160
D162
(ILLUMI)
D163
EJECT
To
E-9146Ba
CN404
LED
NAVI LED
D166
NAVI
SYS 5V
SYS 5V
SW180
RESET
IC151
IR RECEIVE
RM IN
D164
MODE
D171
DVD

1. Remove 2 screws (a) and the Escutheon Ass'y from the Display Unit.

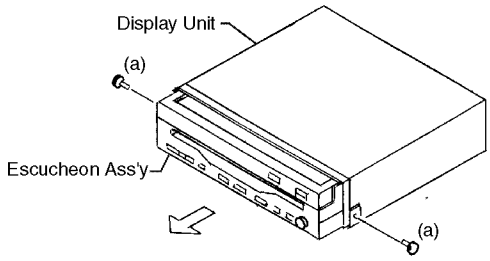

2. Pull out the Monitor from the Display Unit.

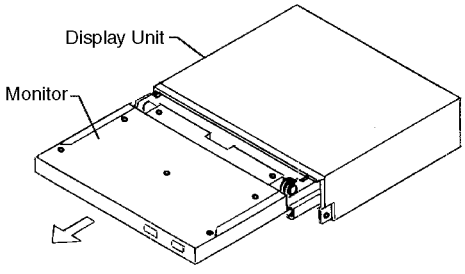

3. Remove 6 screws (b) from the Rear Cover.
4. Remove the Rear Cover and the Front Cover Ass'y from the Plate(A).

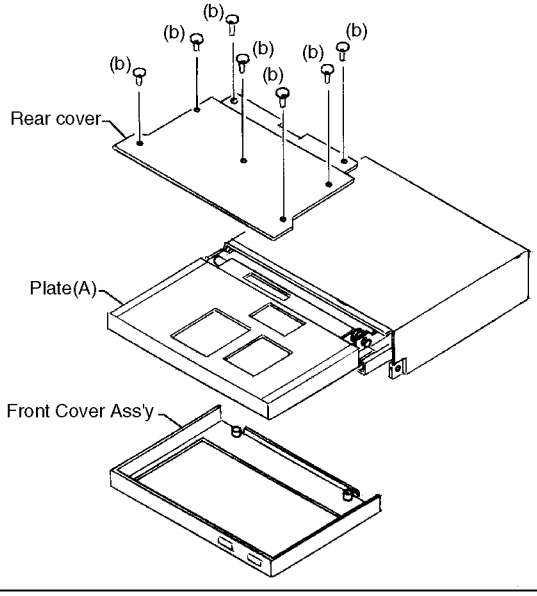

5. Set up the Monitor to the arrow direction showing below.
6. Remove 2 screws (c) from the Bracket for LCD1.
7. Disconnect the Flexible PCB (E-2764) from CN901 (Monitor PCB).
8. Disconnect the Flexible PCB for LCD1 from CN902 (Monitor PCB).
9. Remove LCD1 and Monitor PCB (E-9145A) from the Plate(A).

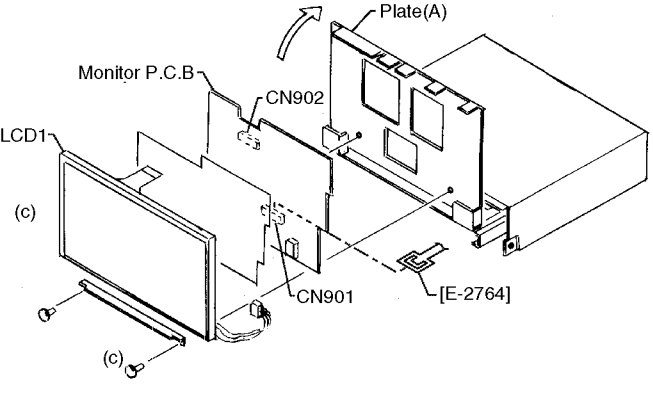

10. Remove 2 screws (d)and spring from the Display Unit.
11. Remove the Plate(A) from the Display Unit.

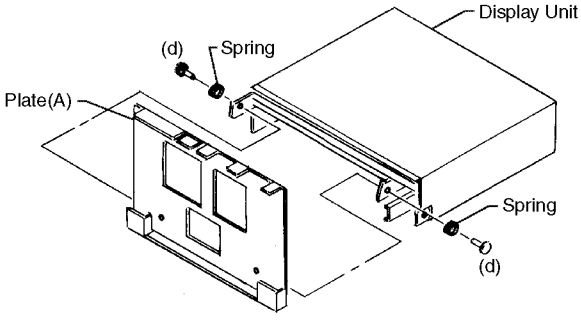

12. Remove 3 screws (e) from the Display Unit.

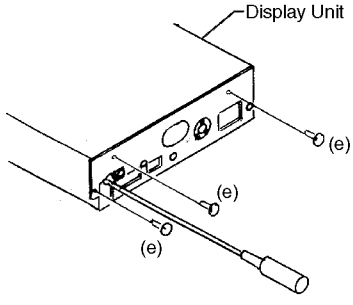

13. Remove 2 screws (h) from the Slide Mechanism Ass'y.
14. Disconnect the Flexible PCB from Slide Mechanism Ass'y and remove the Slide Mechanism Ass'y from the Bottom Chassis.
15. Remove 4 screws (g) from the Bottom Chassis.
16. Disconnect the 2 Flexible PCBs from CN101 (Main PCB :E-9146Ba) and CN403 (Sub PCB :E-9146Bb).
17. Remove 3 screws (h) from the Main PCB (E-9146Ba).
18. Unsolder 2 nails (i) and remove the Main PCB (E-9146Ba).

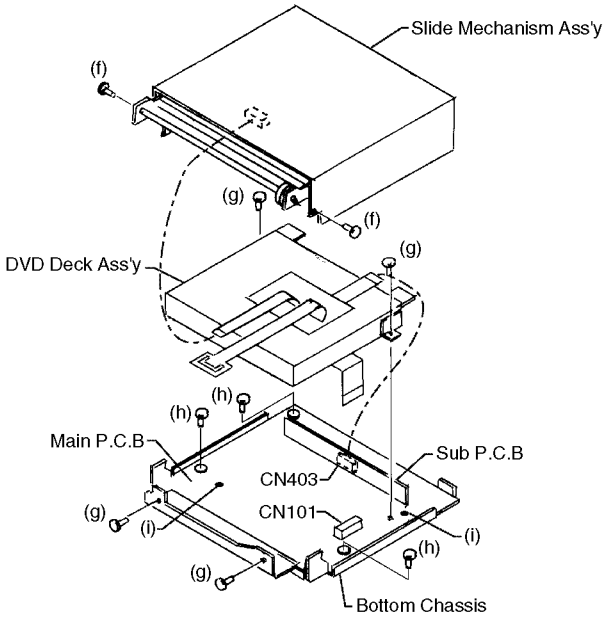

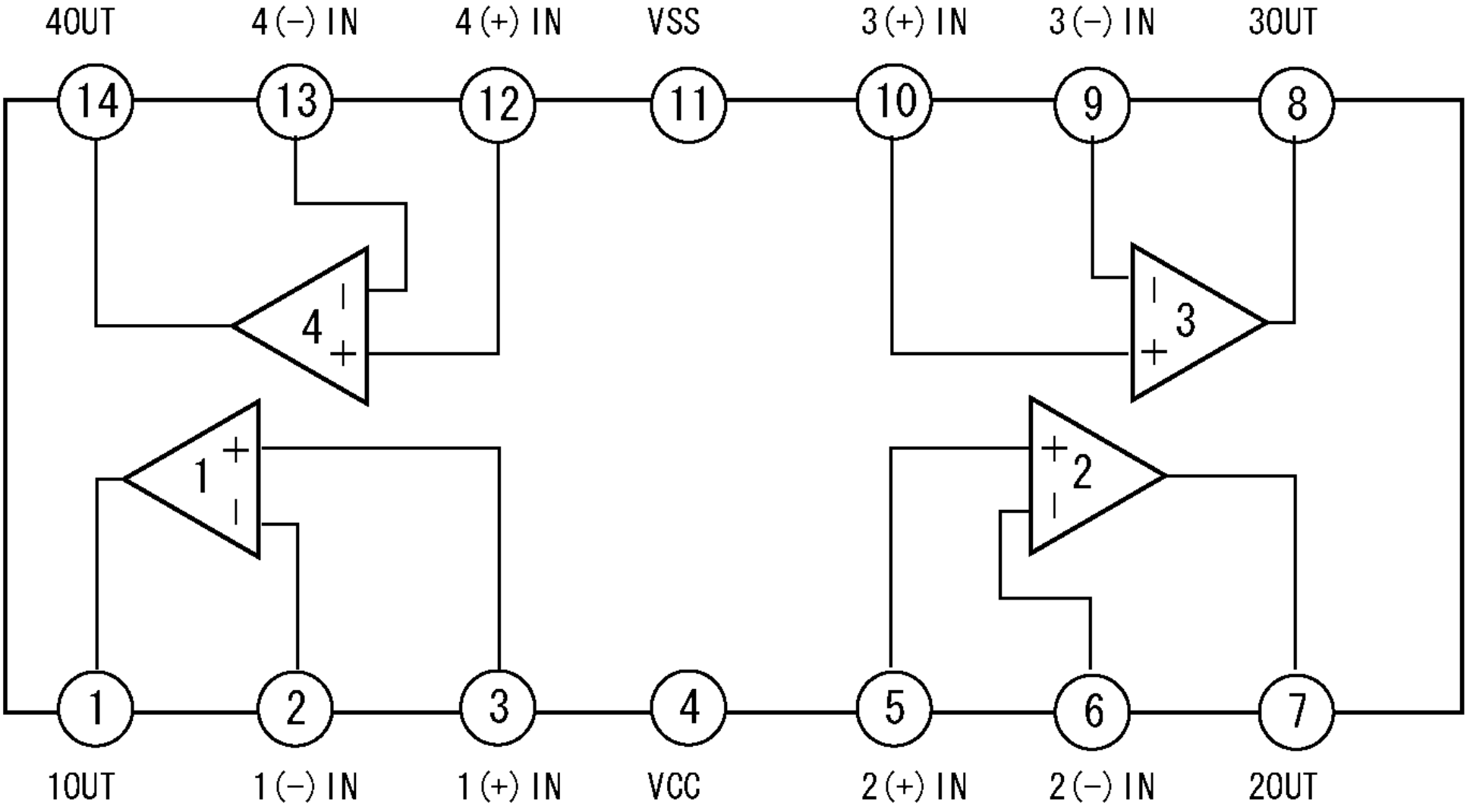
4OUT
4(−) IN
4(+) IN
VSS
3(+) IN
3(−) IN
3OUT
14
13
12
11
10
9
8
4
3
1
2
1
2
3
4
5
6
7
1OUT
1(−) IN
1(+) IN
VCC
2(+) IN
2(−) IN
2OUT

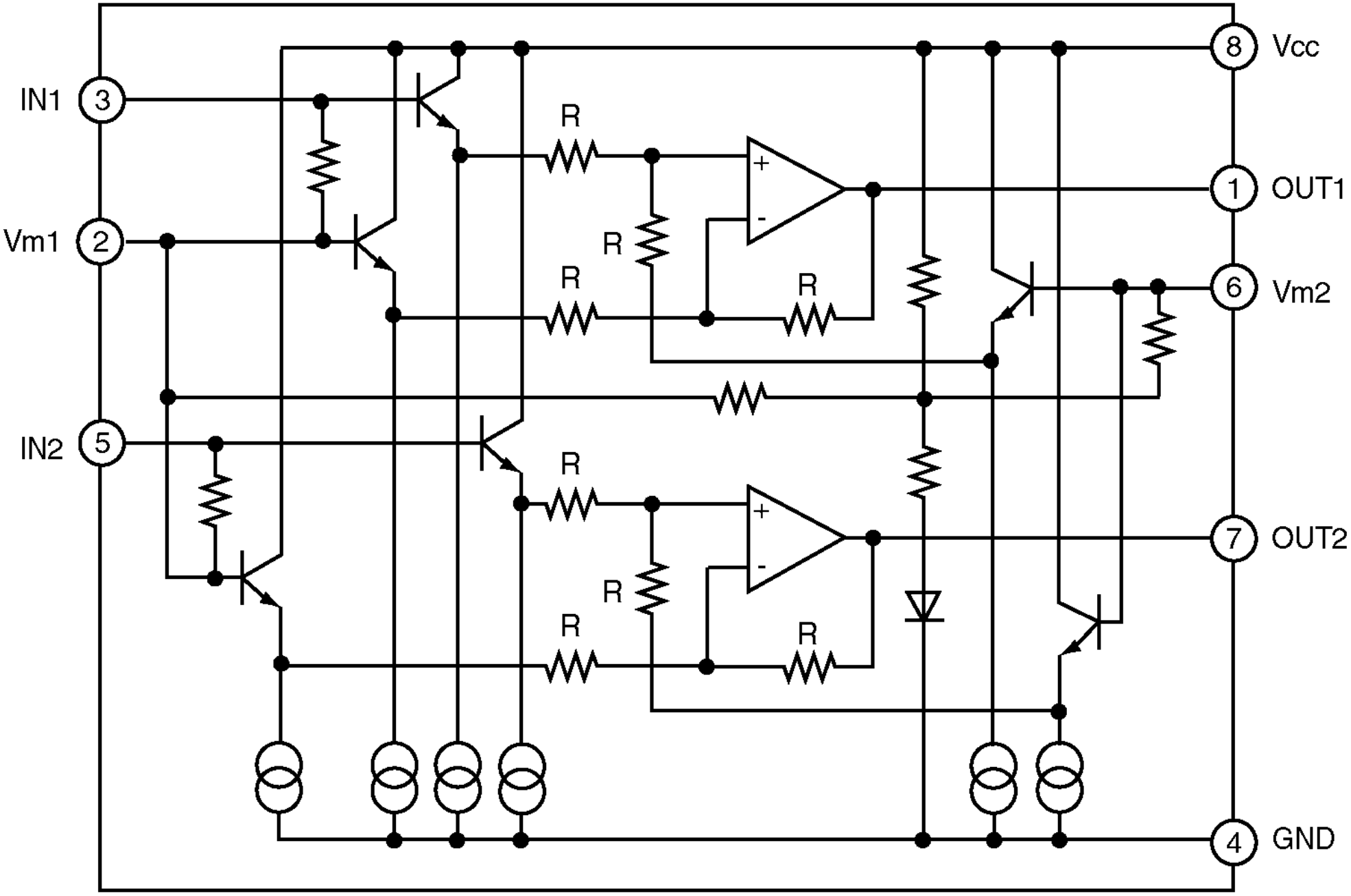
IN1
3
Vm1
2
IN2
5
8
Vcc
1
OUT1
6
Vm2
7
OUT2
4
GND
R
R
R
R
R
R
R
R
+
-
+
-

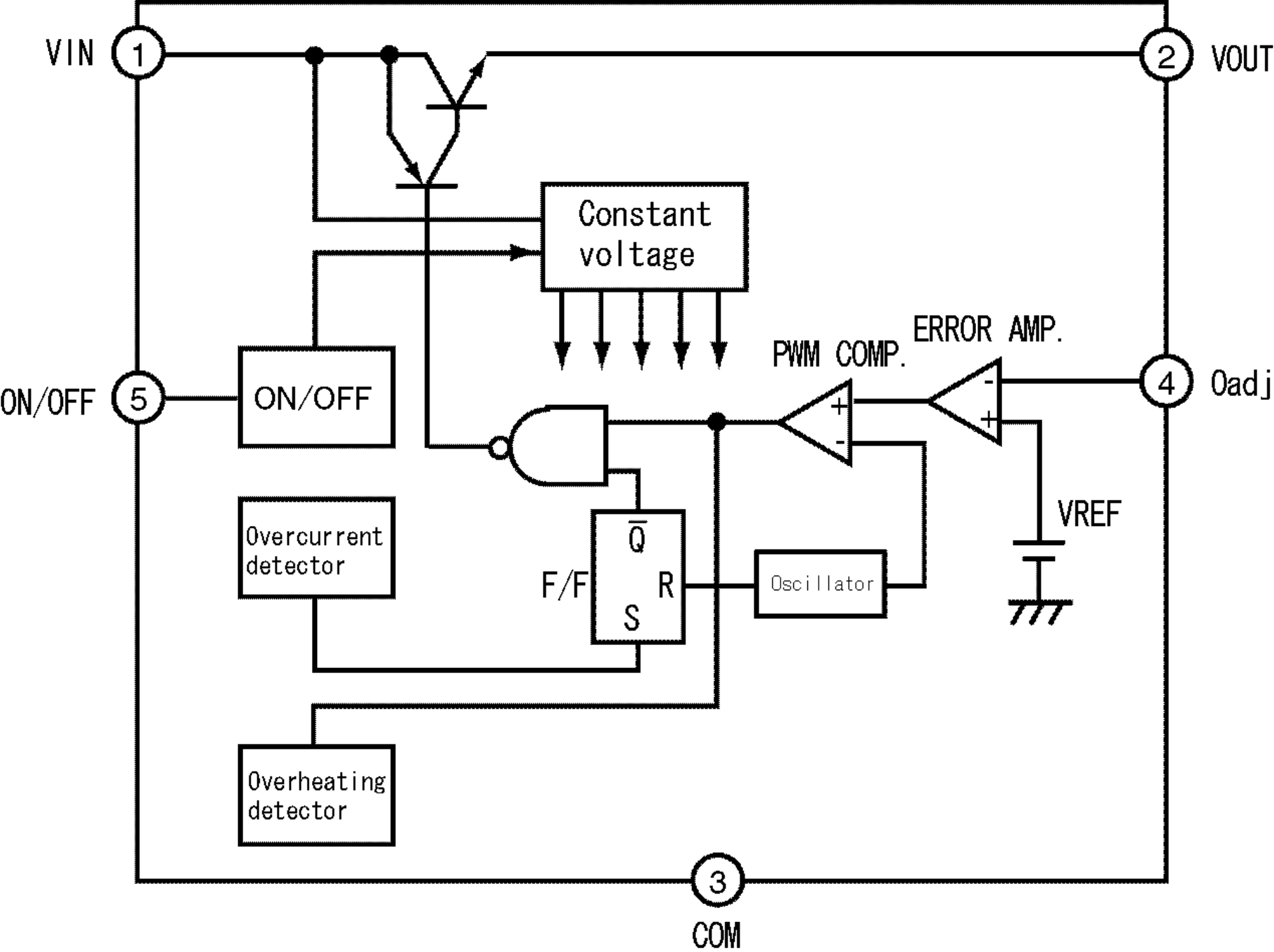
VIN
1
2
VOUT
Constant voltage
ERROR AMP.
PWM COMP.
ON/OFF
5
ON/OFF
4
Oadj
VREF
Overcurrent detector
F/F
Q̄
R
S
Oscillator
Overheating detector
3
COM

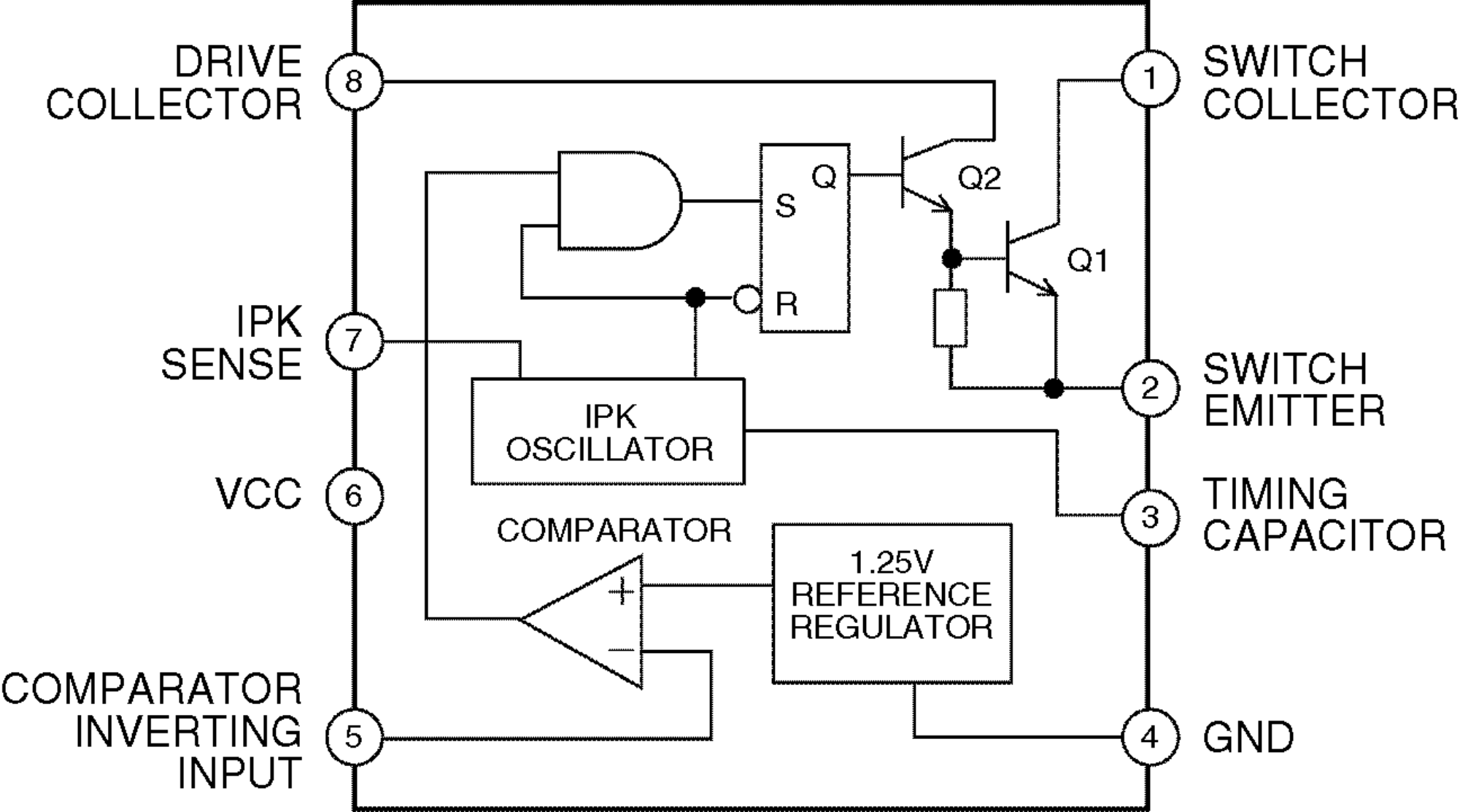
DRIVE COLLECTOR
8
IPK SENSE
7
VCC
6
COMPARATOR INVERTING INPUT
5
1
SWITCH COLLECTOR
2
SWITCH EMITTER
3
TIMING CAPACITOR
4
GND
Q
S
R
Q2
Q1
IPK OSCILLATOR
COMPARATOR
+
−
1.25V REFERENCE REGULATOR

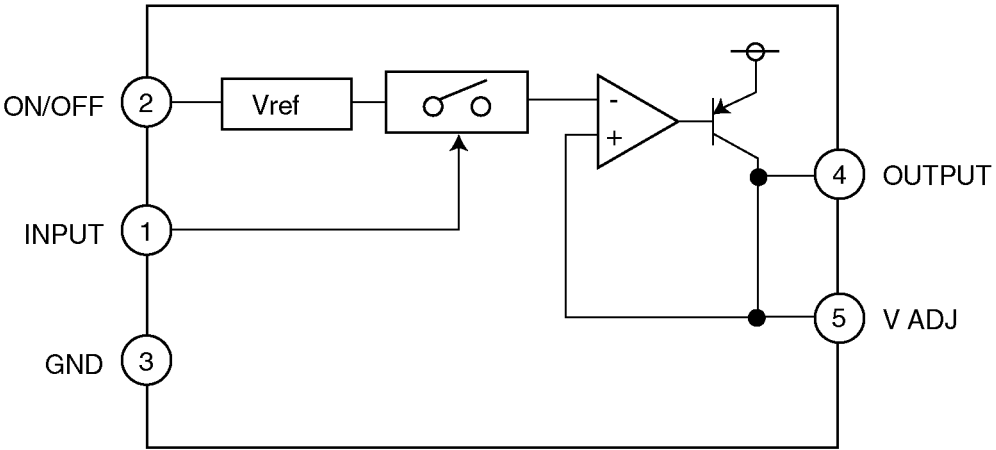
ON/OFF
2
Vref
INPUT
1
GND
3
-
+
4
OUTPUT
5
V ADJ

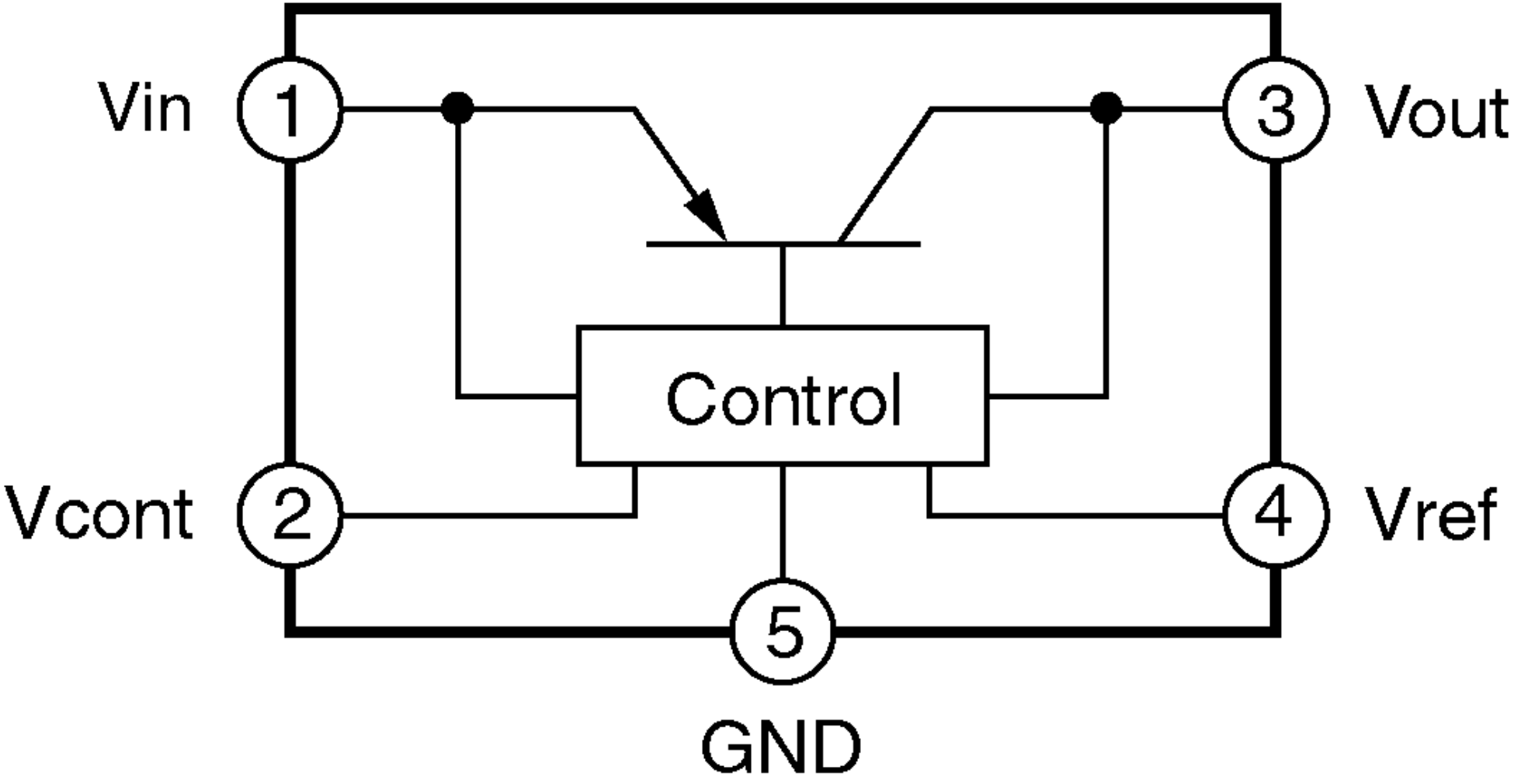
Vin
1
3
Vout
Control
Vcont
2
4
Vref
5
GND

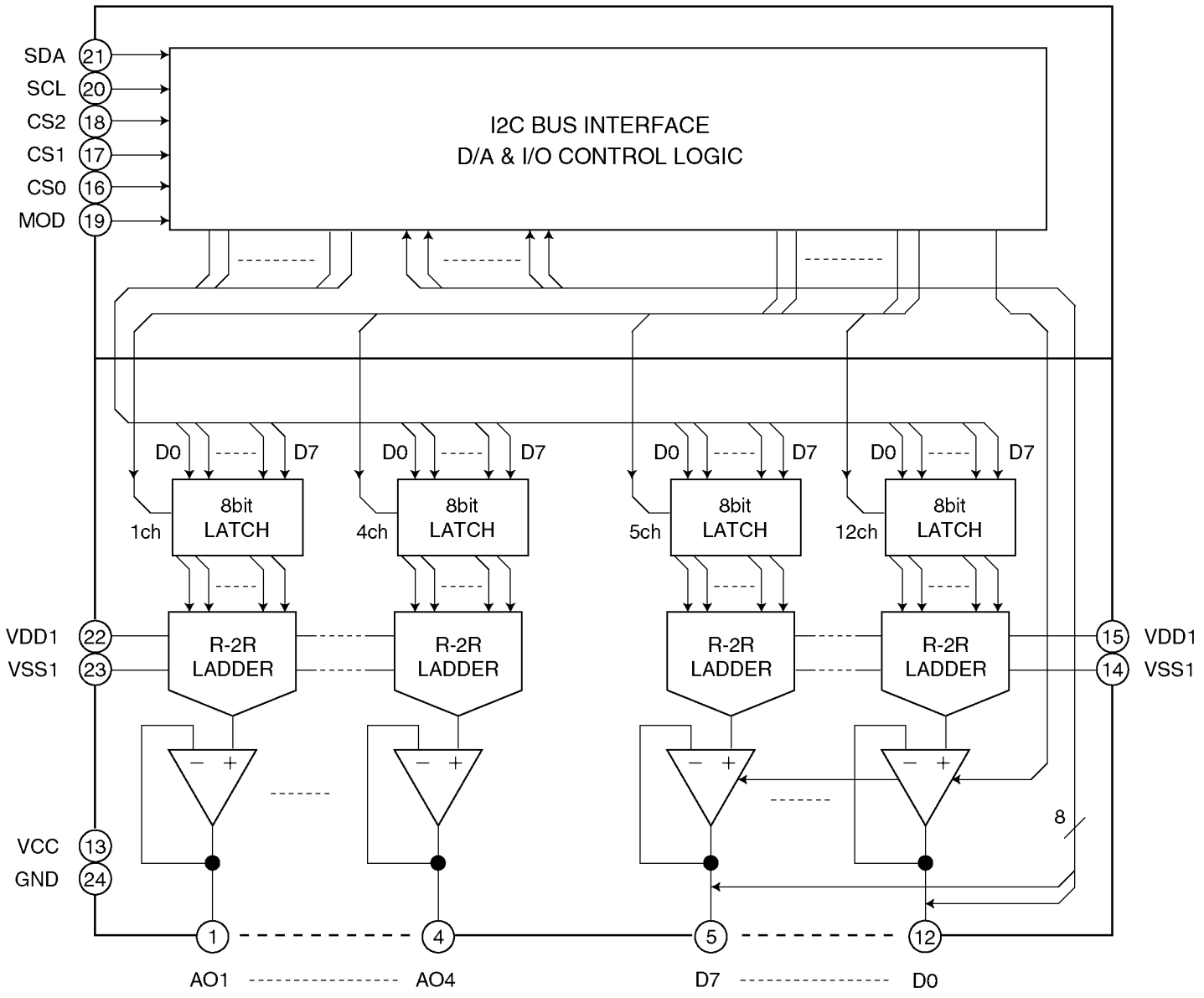
SDA
SCL
CS2
CS1
CS0
MOD
21
20
18
17
16
19
I2C BUS INTERFACE
D/A & I/O CONTROL LOGIC
D0
D7
8bit
LATCH
1ch
4ch
5ch
12ch
VDD1
VSS1
22
23
R-2R
LADDER
15
14
VCC
GND
13
24
8
1
4
5
12
AO1
AO4
D7
D0

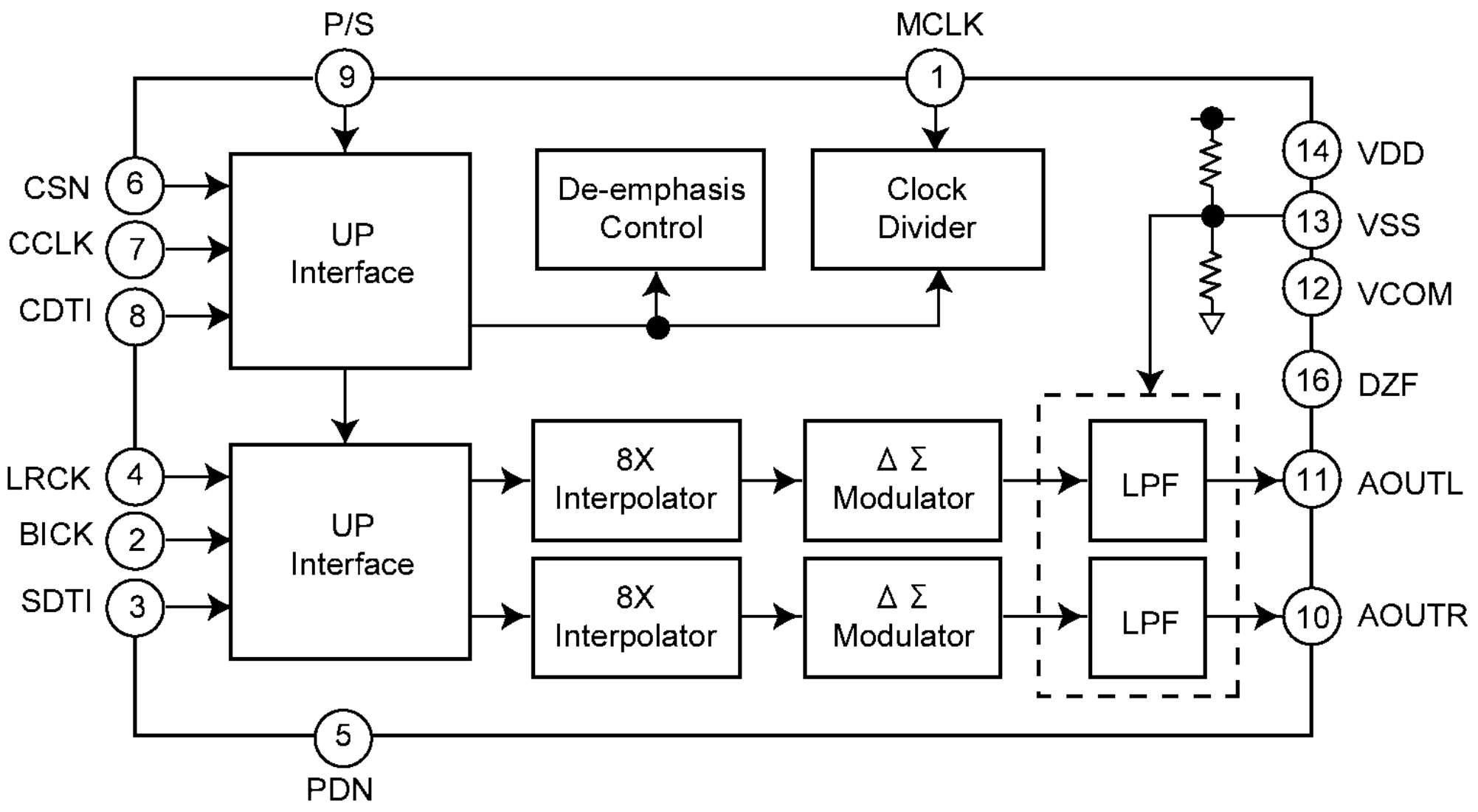
P/S
9
MCLK
1
CSN
6
CCLK
7
CDTI
8
UP Interface
De-emphasis Control
Clock Divider
14
VDD
13
VSS
12
VCOM
16
DZF
LRCK
4
BICK
2
SDTI
3
UP Interface
8X Interpolator
Δ Σ Modulator
LPF
11
AOUTL
8X Interpolator
Δ Σ Modulator
LPF
10
AOUTR
5
PDN

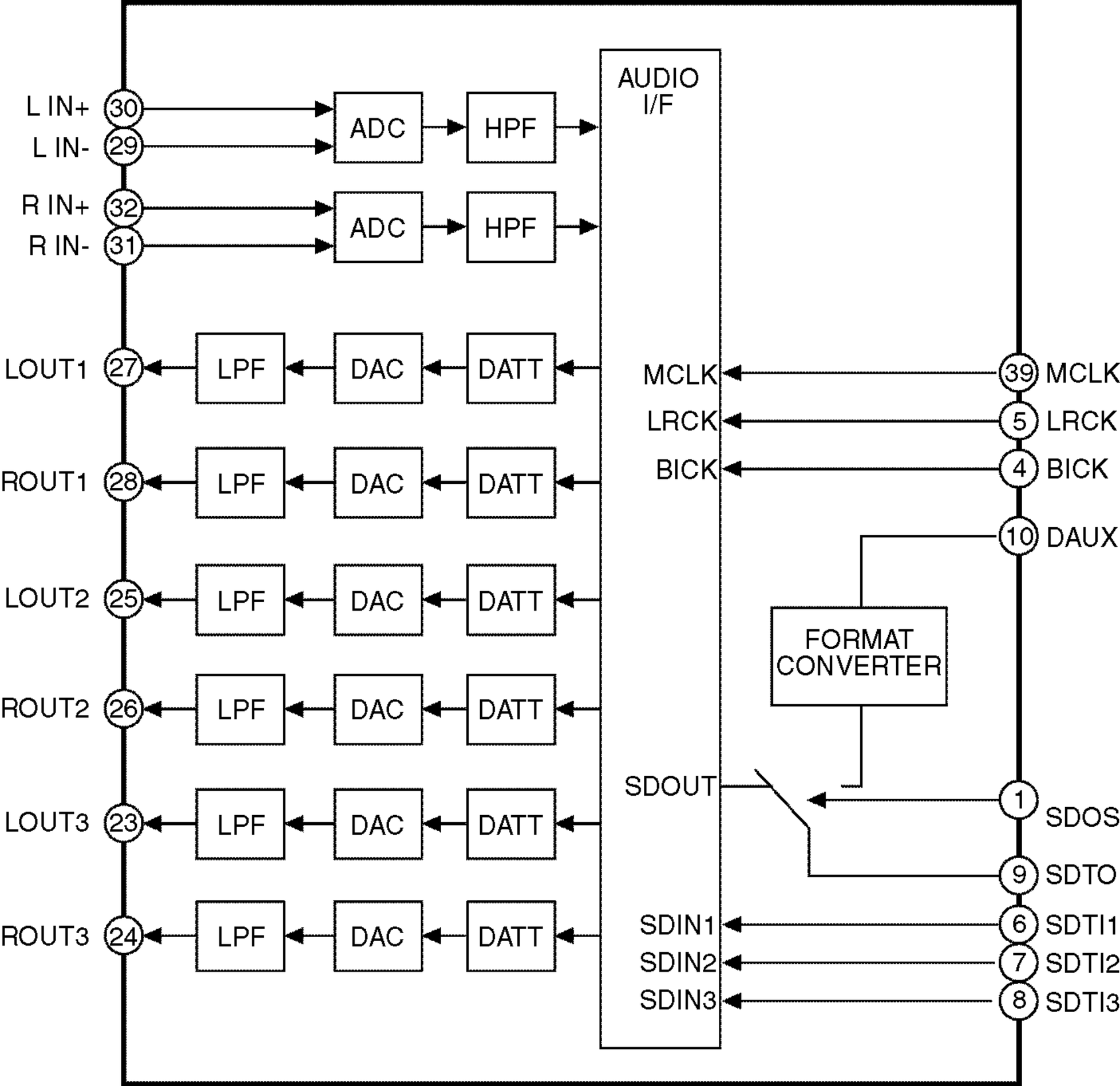
L IN+
30
L IN-
29
R IN+
32
R IN-
31
ADC
HPF
ADC
HPF
AUDIO
I/F
LOUT1
27
ROUT1
28
LOUT2
25
ROUT2
26
LOUT3
23
ROUT3
24
LPF
DAC
DATT
MCLK
LRCK
BICK
SDOUT
SDIN1
SDIN2
SDIN3
39
MCLK
5
LRCK
4
BICK
10
DAUX
FORMAT
CONVERTER
1
SDOS
9
SDTO
6
SDTI1
7
SDTI2
8
SDTI3

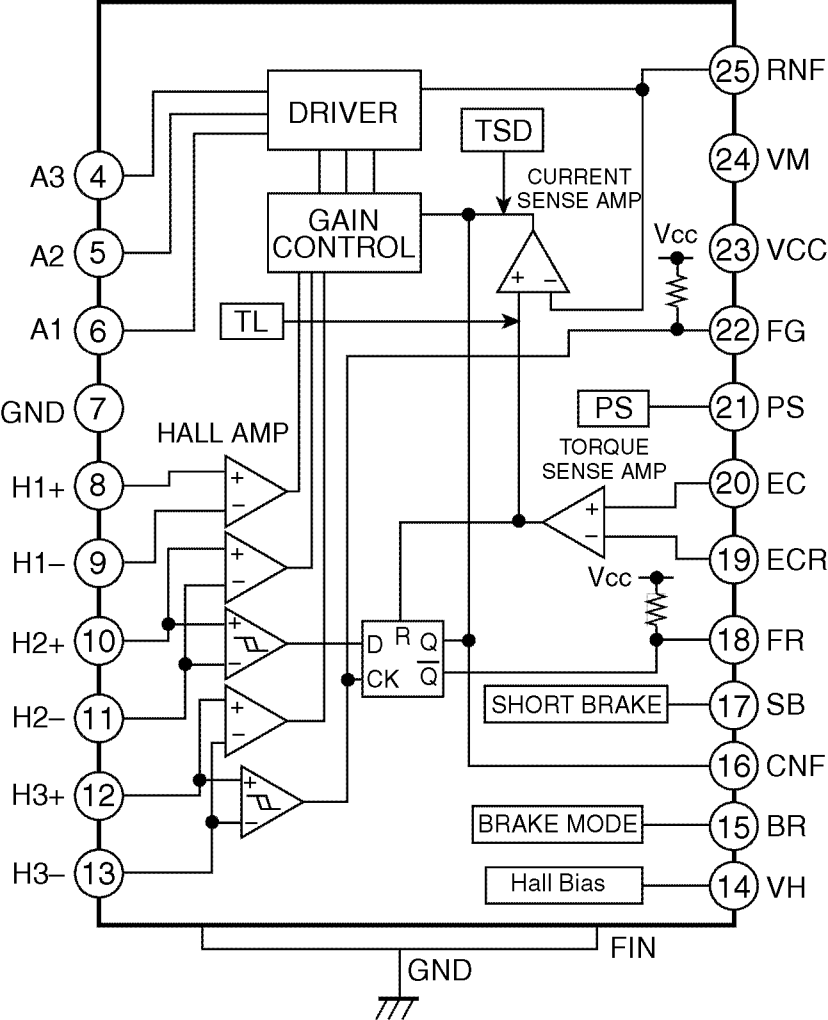
DRIVER
TSD
CURRENT SENSE AMP
GAIN CONTROL
TL
HALL AMP
PS
TORQUE SENSE AMP
SHORT BRAKE
BRAKE MODE
Hall Bias
Vcc
Vcc
D
R
Q
CK
Q
A3 4
A2 5
A1 6
GND 7
H1+ 8
H1– 9
H2+ 10
H2– 11
H3+ 12
H3– 13
25 RNF
24 VM
23 VCC
22 FG
21 PS
20 EC
19 ECR
18 FR
17 SB
16 CNF
15 BR
14 VH
FIN
GND

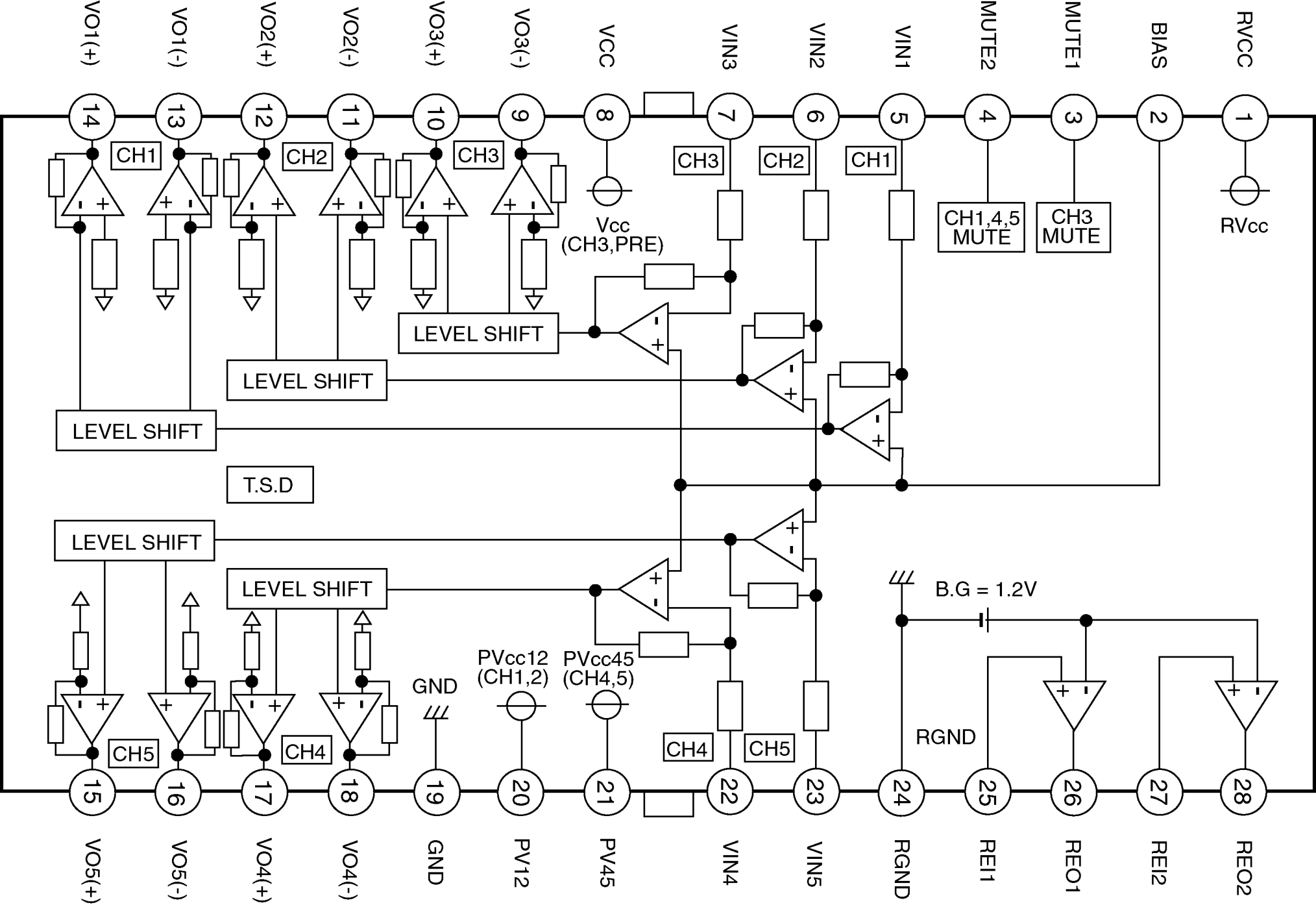
VO1(+)
VO1(-)
VO2(+)
VO2(-)
VO3(+)
VO3(-)
VCC
VIN3
VIN2
VIN1
MUTE2
MUTE1
BIAS
RVCC
14
13
12
11
10
9
8
7
6
5
4
3
2
1
CH1
CH2
CH3
CH3
CH2
CH1
Vcc
(CH3,PRE)
CH1,4,5
MUTE
CH3
MUTE
RVcc
LEVEL SHIFT
LEVEL SHIFT
LEVEL SHIFT
T.S.D
LEVEL SHIFT
LEVEL SHIFT
B.G = 1.2V
PVcc12
(CH1,2)
PVcc45
(CH4,5)
GND
CH5
CH4
CH4
CH5
RGND
15
16
17
18
19
20
21
22
23
24
25
26
27
28
VO5(+)
VO5(-)
VO4(+)
VO4(-)
GND
PV12
PV45
VIN4
VIN5
RGND
REI1
REO1
REI2
REO2

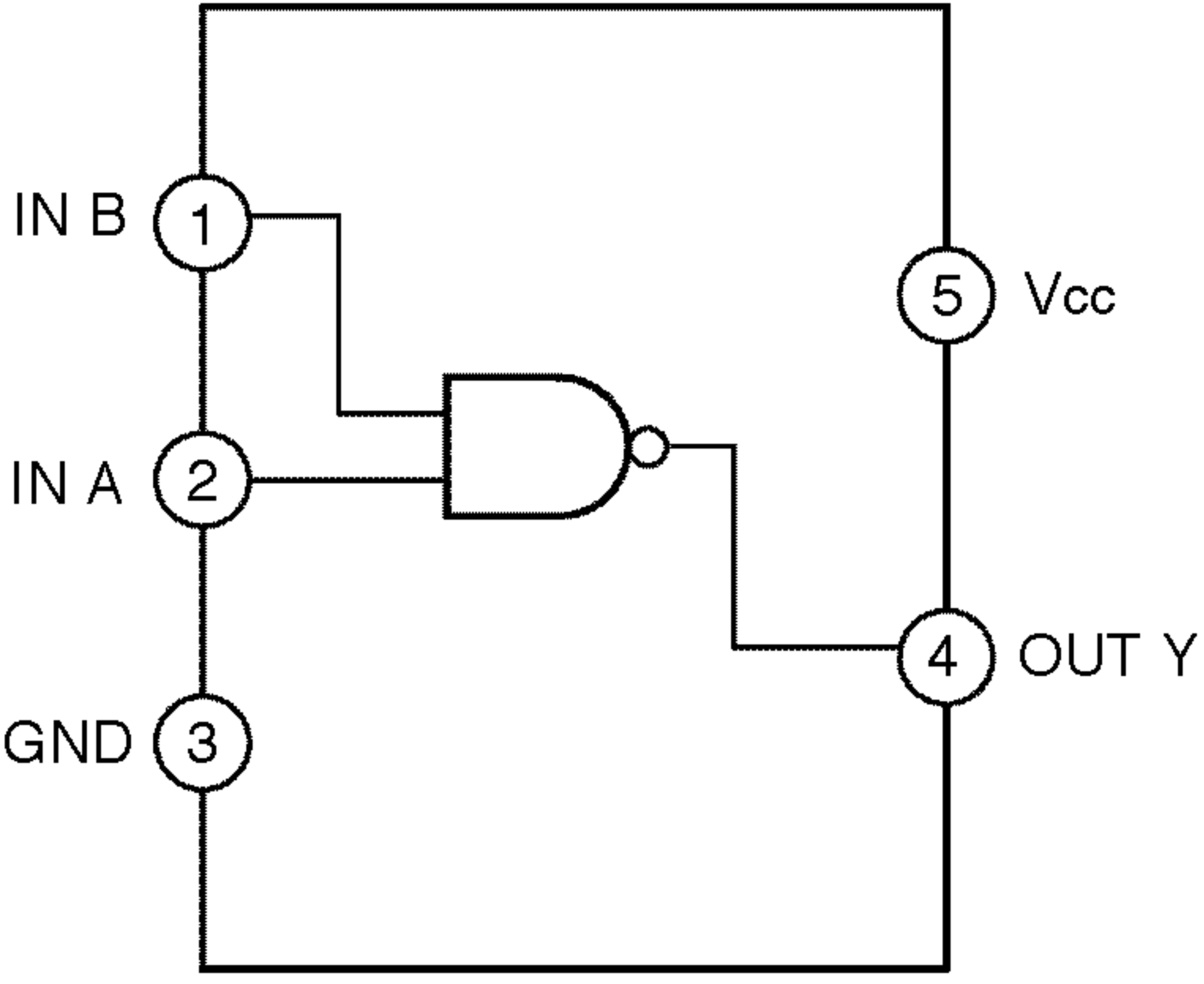
IN B
1
IN A
2
GND
3
5
Vcc
4
OUT Y

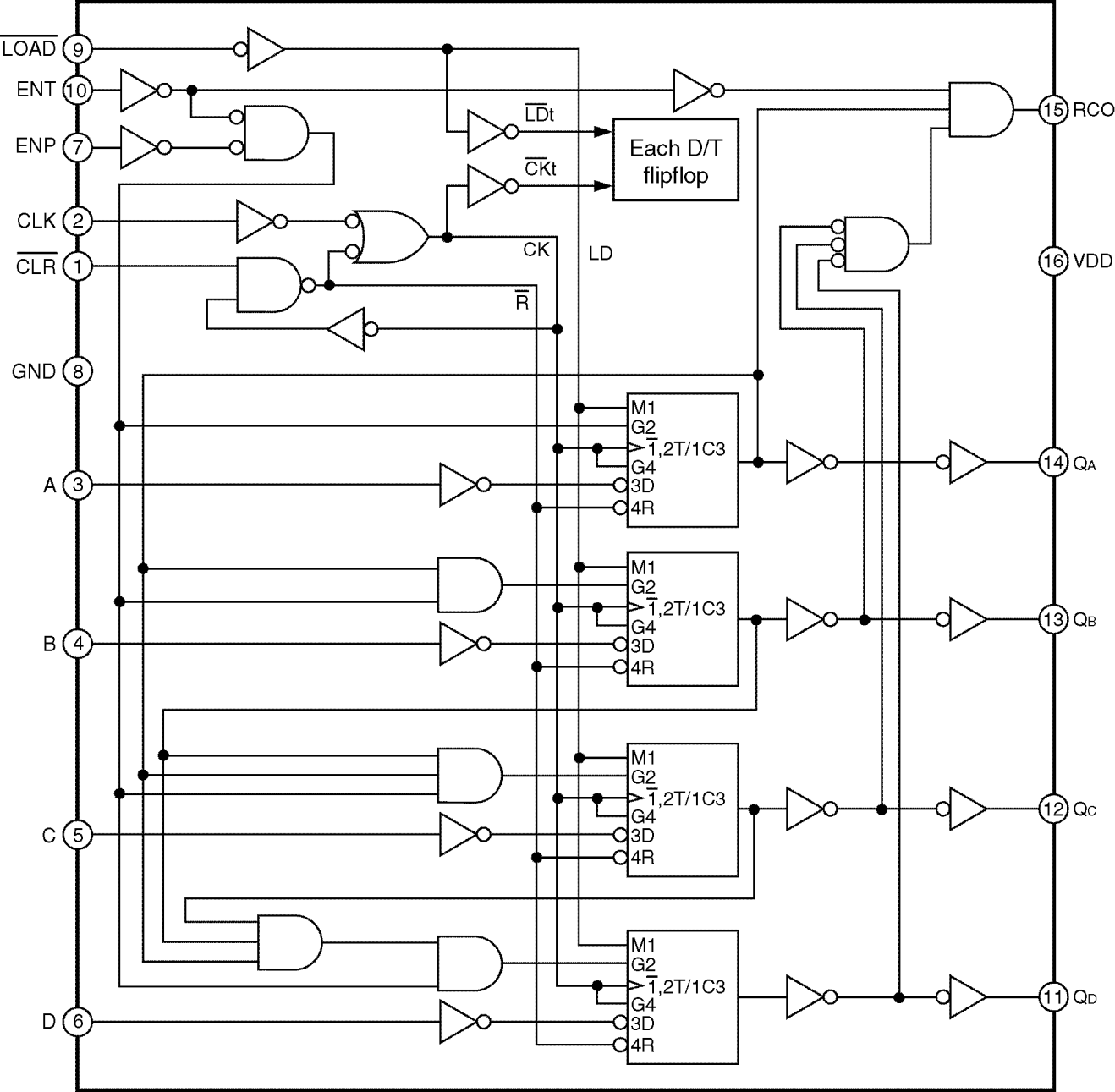
LOAD 9
ENT 10
ENP 7
CLK 2
CLR 1
GND 8
A 3
B 4
C 5
D 6
15 RCO
16 VDD
14 QA
13 QB
12 QC
11 QD
LDt
CKt
Each D/T flipflop
CK
LD
R
M1
G2
1,2T/1C3
G4
3D
4R

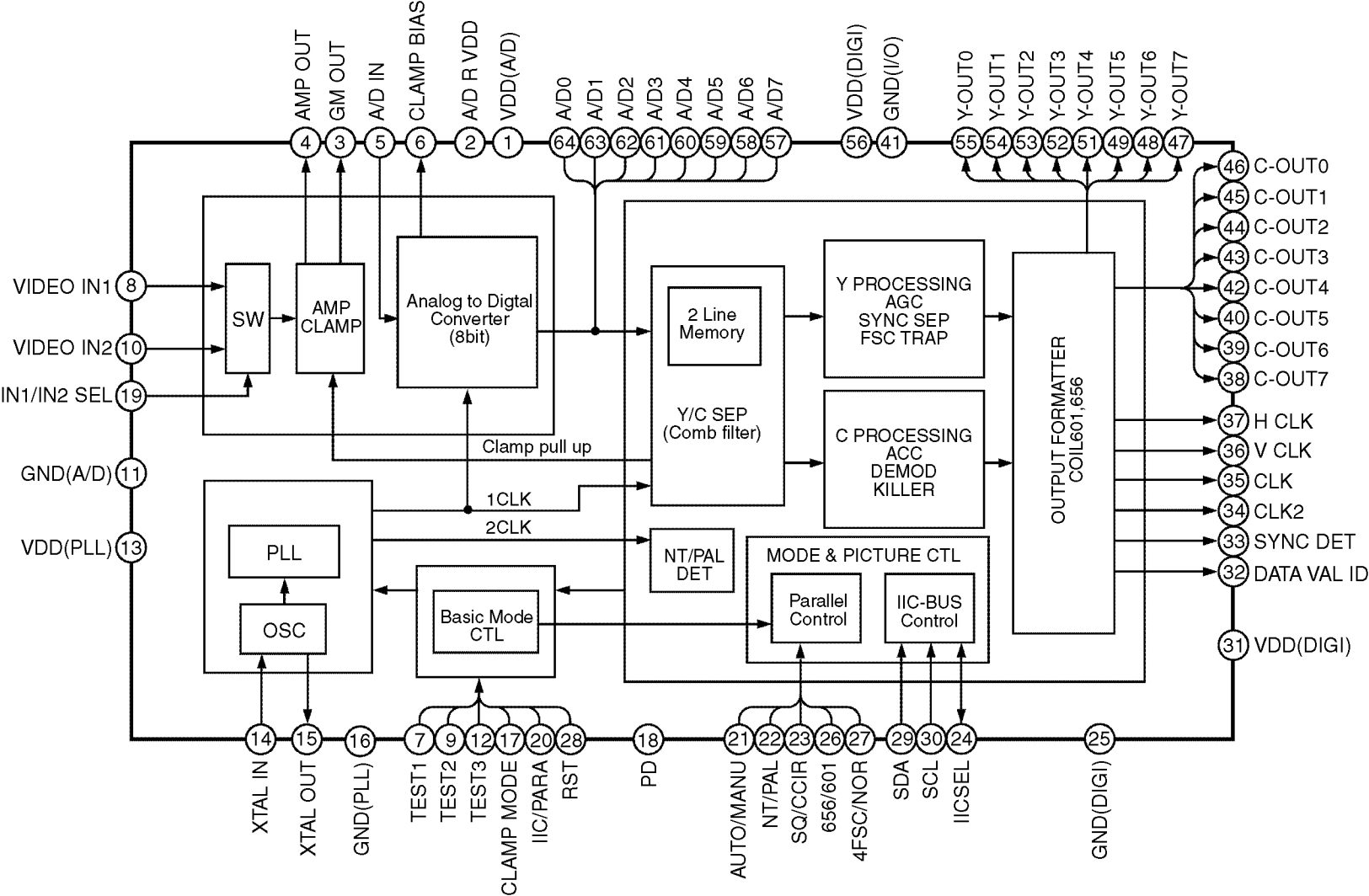
AMP OUT
GM OUT
A/D IN
CLAMP BIAS
A/D R VDD
VDD(A/D)
A/D0
A/D1
A/D2
A/D3
A/D4
A/D5
A/D6
A/D7
VDD(DIGI)
GND(I/O)
Y-OUT0
Y-OUT1
Y-OUT2
Y-OUT3
Y-OUT4
Y-OUT5
Y-OUT6
Y-OUT7
VIDEO IN1
VIDEO IN2
IN1/IN2 SEL
GND(A/D)
VDD(PLL)
SW
AMP CLAMP
Analog to Digtal Converter (8bit)
2 Line Memory
Y/C SEP (Comb filter)
Y PROCESSING AGC SYNC SEP FSC TRAP
C PROCESSING ACC DEMOD KILLER
OUTPUT FORMATTER COIL601,656
Clamp pull up
1CLK
2CLK
PLL
OSC
NT/PAL DET
Basic Mode CTL
MODE & PICTURE CTL
Parallel Control
IIC-BUS Control
C-OUT0
C-OUT1
C-OUT2
C-OUT3
C-OUT4
C-OUT5
C-OUT6
C-OUT7
H CLK
V CLK
CLK
CLK2
SYNC DET
DATA VAL ID
VDD(DIGI)
XTAL IN
XTAL OUT
GND(PLL)
TEST1
TEST2
TEST3
CLAMP MODE
IIC/PARA
RST
PD
AUTO/MANU
NT/PAL
SQ/CCIR
656/601
4FSC/NOR
SDA
SCL
IICSEL
GND(DIGI)

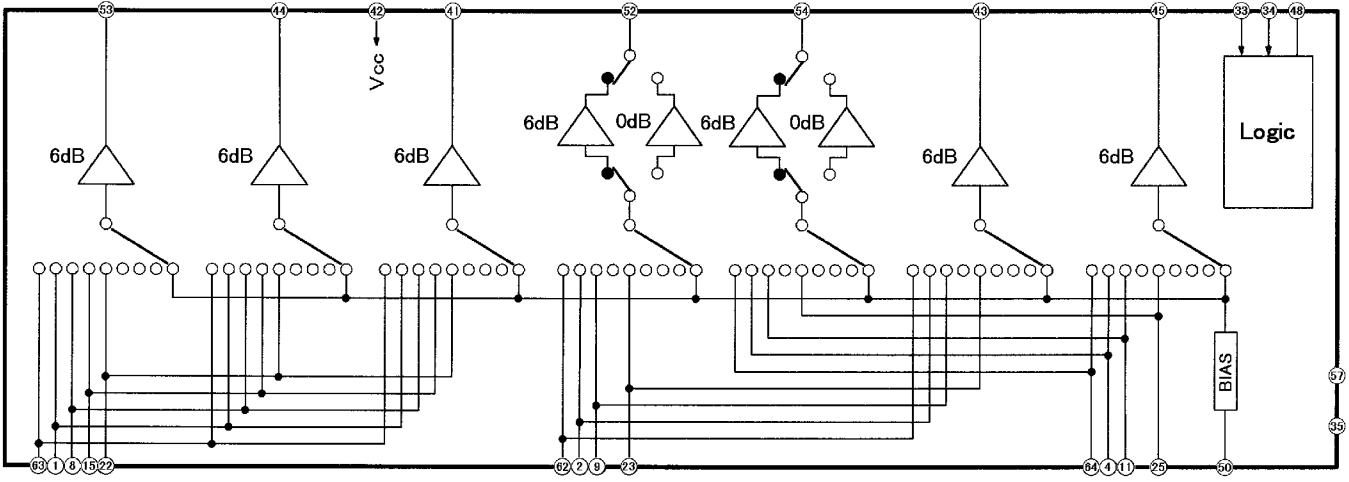
53
44
42
41
52
54
43
45
33
34
48
Vcc
6dB
6dB
6dB
6dB
0dB
6dB
0dB
6dB
6dB
Logic
BIAS
57
35
63
1
8
15
22
62
2
9
23
84
4
11
25
50

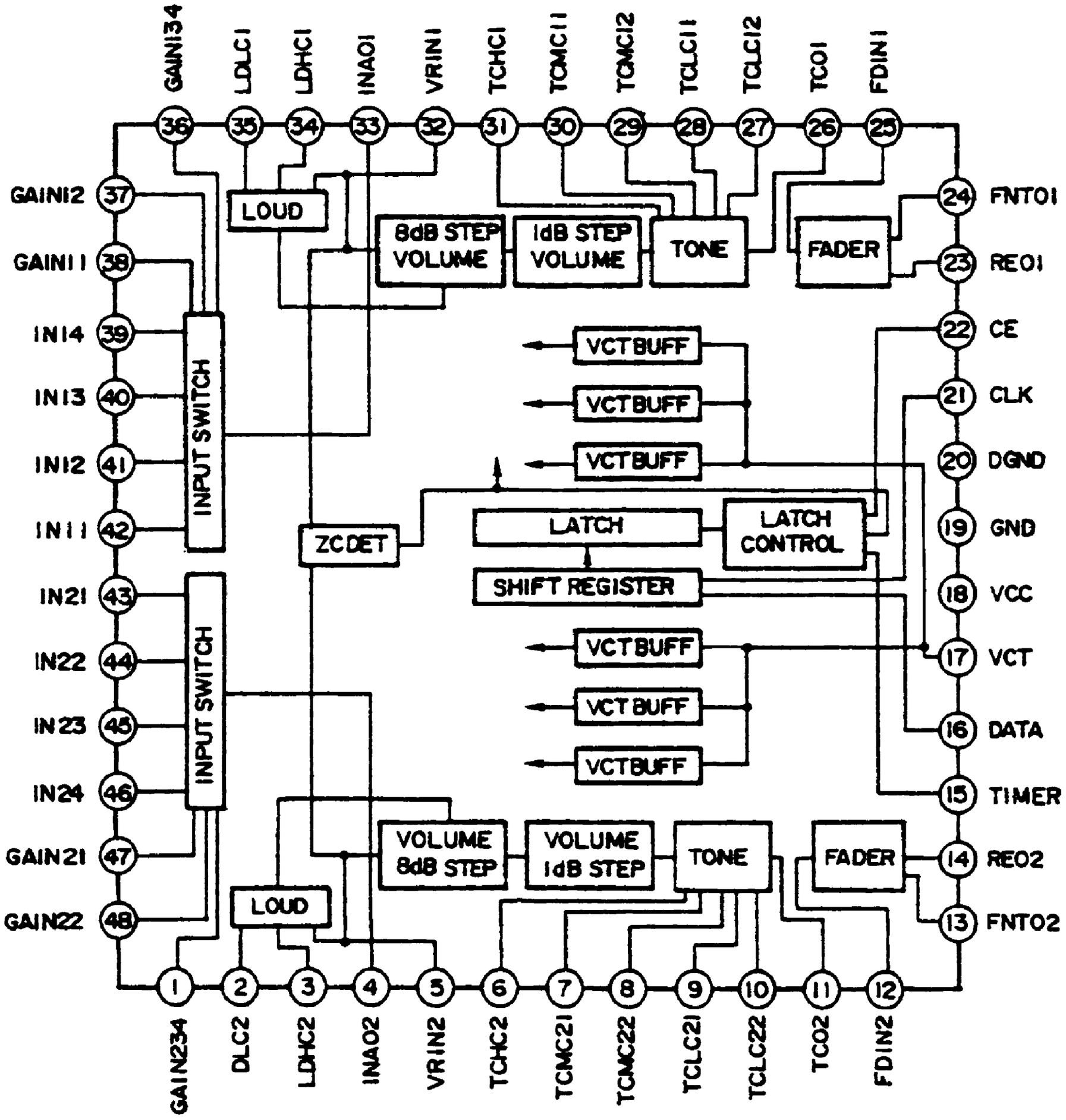
GAIN134
LDLC1
LDHC1
INAO1
VRIN1
TCHC1
TCMC11
TCMC12
TCLC11
TCLC12
TCO1
FDIN1
36
35
34
33
32
31
30
29
28
27
26
25
GAIN12
37
GAIN11
38
IN14
39
IN13
40
IN12
41
IN11
42
IN21
43
IN22
44
IN23
45
IN24
46
GAIN21
47
GAIN22
48
INPUT SWITCH
INPUT SWITCH
LOUD
8dB STEP VOLUME
1dB STEP VOLUME
TONE
FADER
VCTBUFF
VCTBUFF
VCTBUFF
ZCDET
LATCH
LATCH CONTROL
SHIFT REGISTER
VCTBUFF
VCTBUFF
VCTBUFF
VOLUME 8dB STEP
VOLUME 1dB STEP
TONE
FADER
LOUD
24
FNTO1
23
REO1
22
CE
21
CLK
20
DGND
19
GND
18
VCC
17
VCT
16
DATA
15
TIMER
14
REO2
13
FNTO2
1
2
3
4
5
6
7
8
9
10
11
12
GAIN234
DLC2
LDHC2
INAO2
VRIN2
TCHC2
TCMC21
TCMC22
TCLC21
TCLC22
TCO2
FDIN2

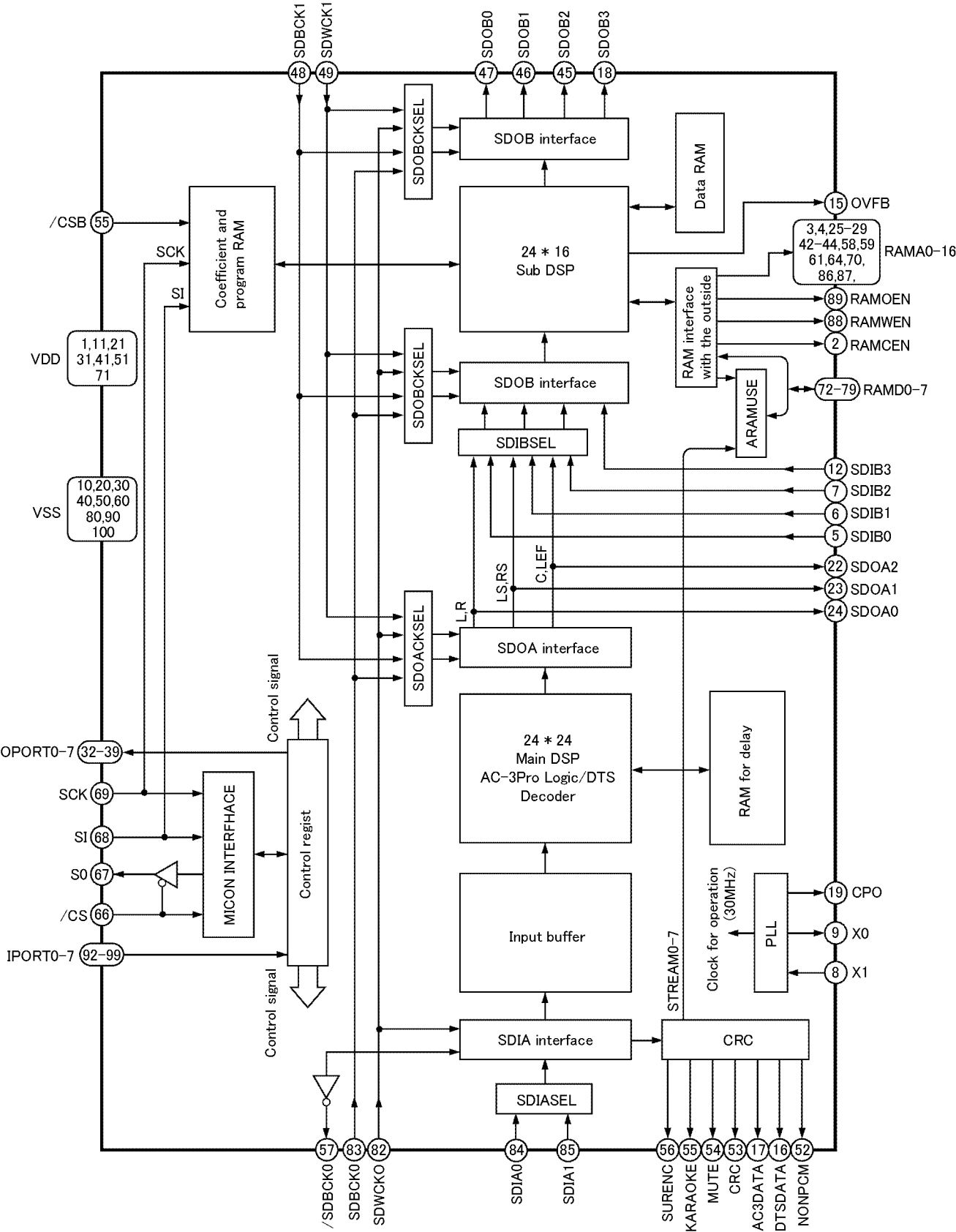
SDBCK1
SDWCK1
SDOB0
SDOB1
SDOB2
SDOB3
48
49
47
46
45
18
SDOBCKSEL
SDOB interface
Data RAM
/CSB
55
Coefficient and program RAM
SCK
SI
24 * 16
Sub DSP
15
OVFB
3,4,25-29
42-44,58,59
61,64,70,
86,87,
RAMA0-16
RAM interface with the outside
89
RAMOEN
88
RAMWEN
2
RAMCEN
VDD
1,11,21
31,41,51
71
SDOBCKSEL
SDOB interface
ARAMUSE
72-79
RAMD0-7
SDIBSEL
12
SDIB3
7
SDIB2
6
SDIB1
5
SDIB0
VSS
10,20,30
40,50,60
80,90
100
LS,RS
C,LEF
22
SDOA2
23
SDOA1
24
SDOA0
L,R
SDOACKSEL
SDOA interface
Control signal
24 * 24
Main DSP
AC-3Pro Logic/DTS
Decoder
RAM for delay
OPORT0-7
32-39
SCK
69
SI
68
S0
67
/CS
66
MICON INTERFHACE
Control regist
Input buffer
Clock for operation
(30MHz)
PLL
19
CPO
9
X0
8
X1
IPORT0-7
92-99
Control signal
STREAM0-7
SDIA interface
CRC
SDIASEL
57
83
82
84
85
56
55
54
53
17
16
52
/SDBCK0
SDBCK0
SDWCKO
SDIA0
SDIA1
SUREN0
KARAOKE
MUTE
CRC
AC3DATA
DTSDATA
NONPCM

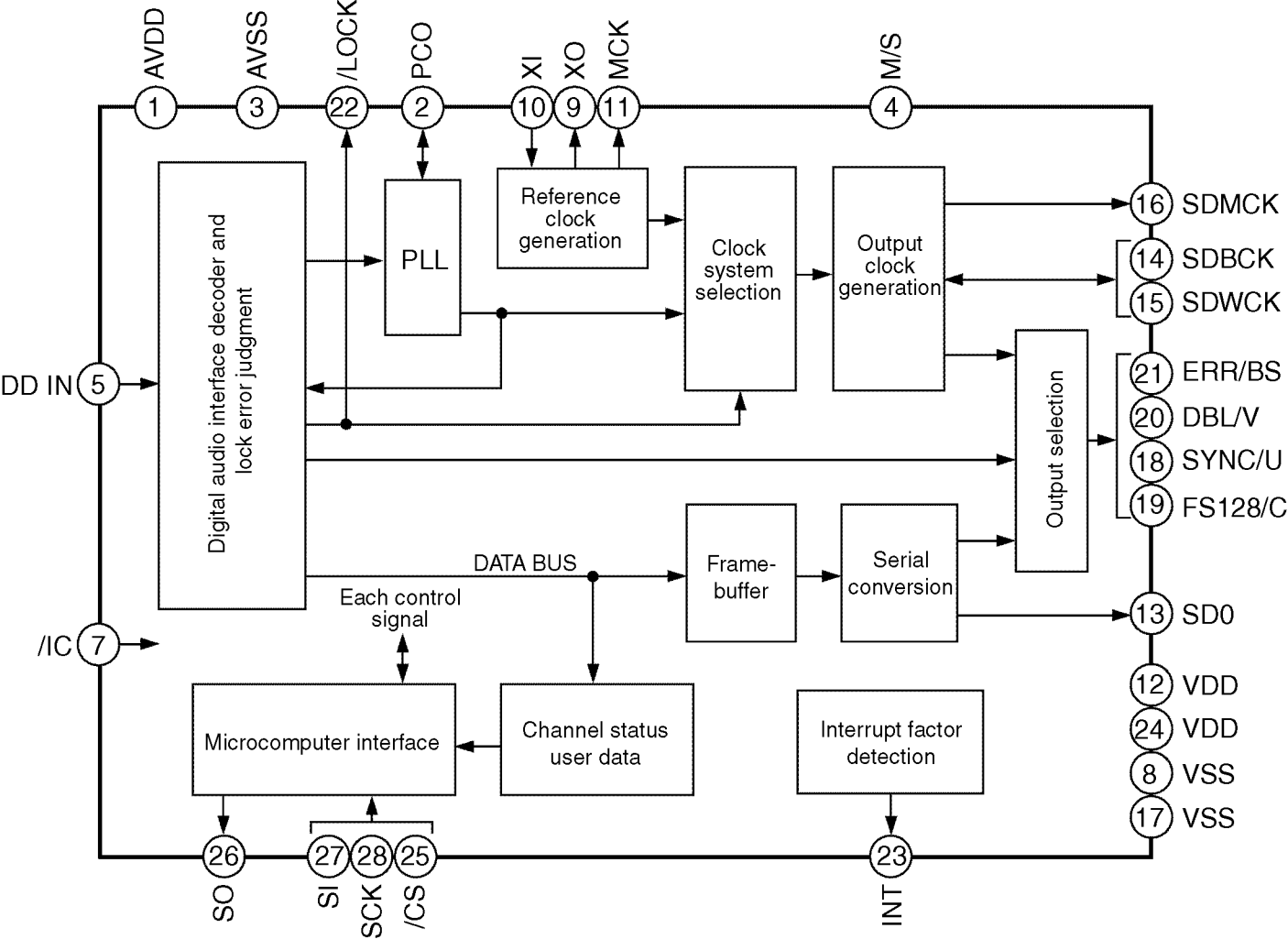
AVDD
AVSS
/LOCK
PCO
XI
XO
MCK
M/S
1
3
22
2
10
9
11
4
Digital audio interface decoder and lock error judgment
PLL
Reference clock generation
Clock system selection
Output clock generation
Output selection
16 SDMCK
14 SDBCK
15 SDWCK
21 ERR/BS
20 DBL/V
18 SYNC/U
19 FS128/C
DD IN 5
DATA BUS
Frame-buffer
Serial conversion
13 SD0
Each control signal
/IC 7
Microcomputer interface
Channel status user data
Interrupt factor detection
12 VDD
24 VDD
8 VSS
17 VSS
26
27
28
25
23
SO
SI
SCK
/CS
INT

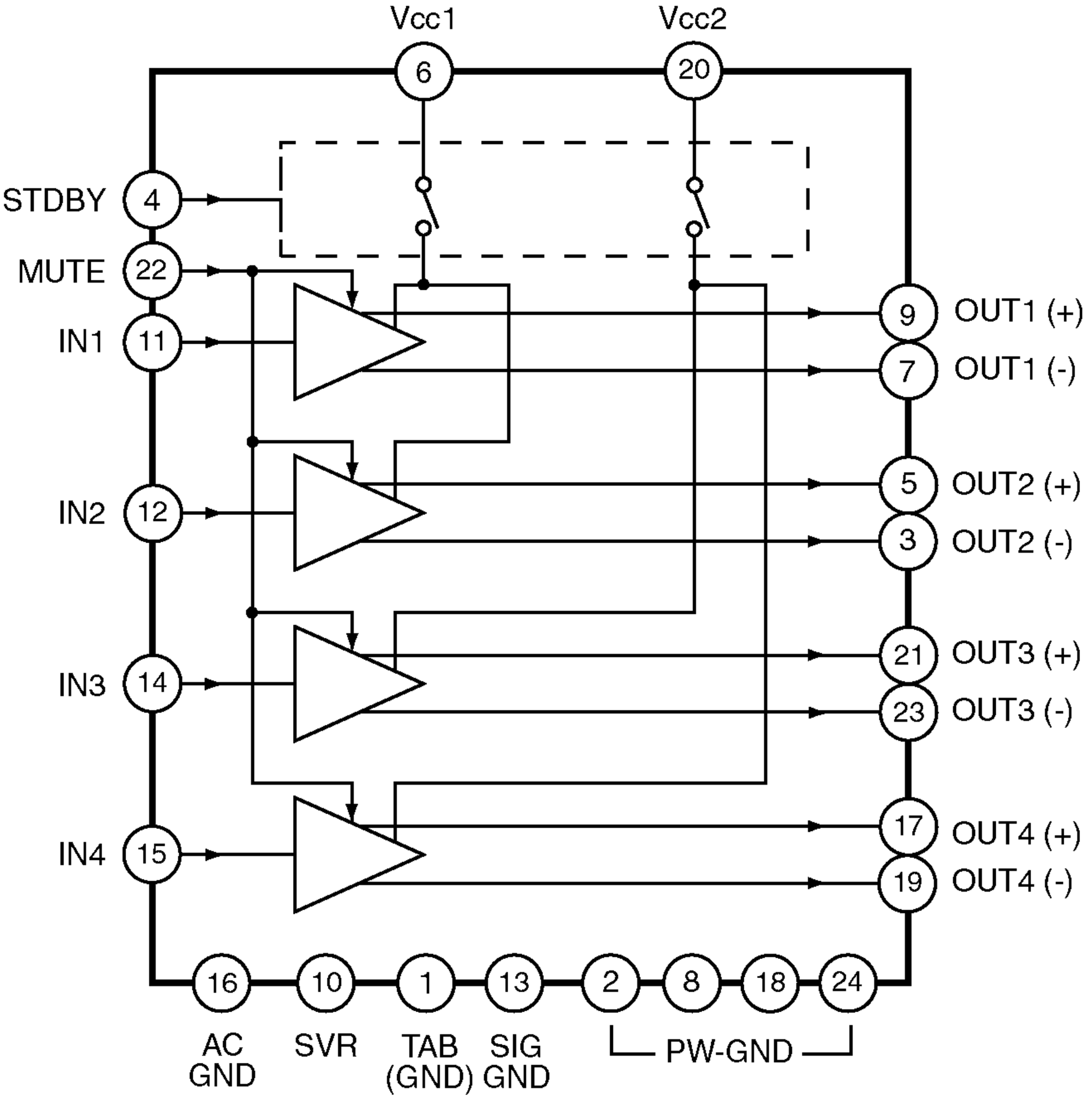
Vcc1
Vcc2
6
20
STDBY
4
MUTE
22
IN1
11
IN2
12
IN3
14
IN4
15
9
OUT1 (+)
7
OUT1 (-)
5
OUT2 (+)
3
OUT2 (-)
21
OUT3 (+)
23
OUT3 (-)
17
OUT4 (+)
19
OUT4 (-)
16
10
1
13
2
8
18
24
AC GND
SVR
TAB (GND)
SIG GND
PW-GND

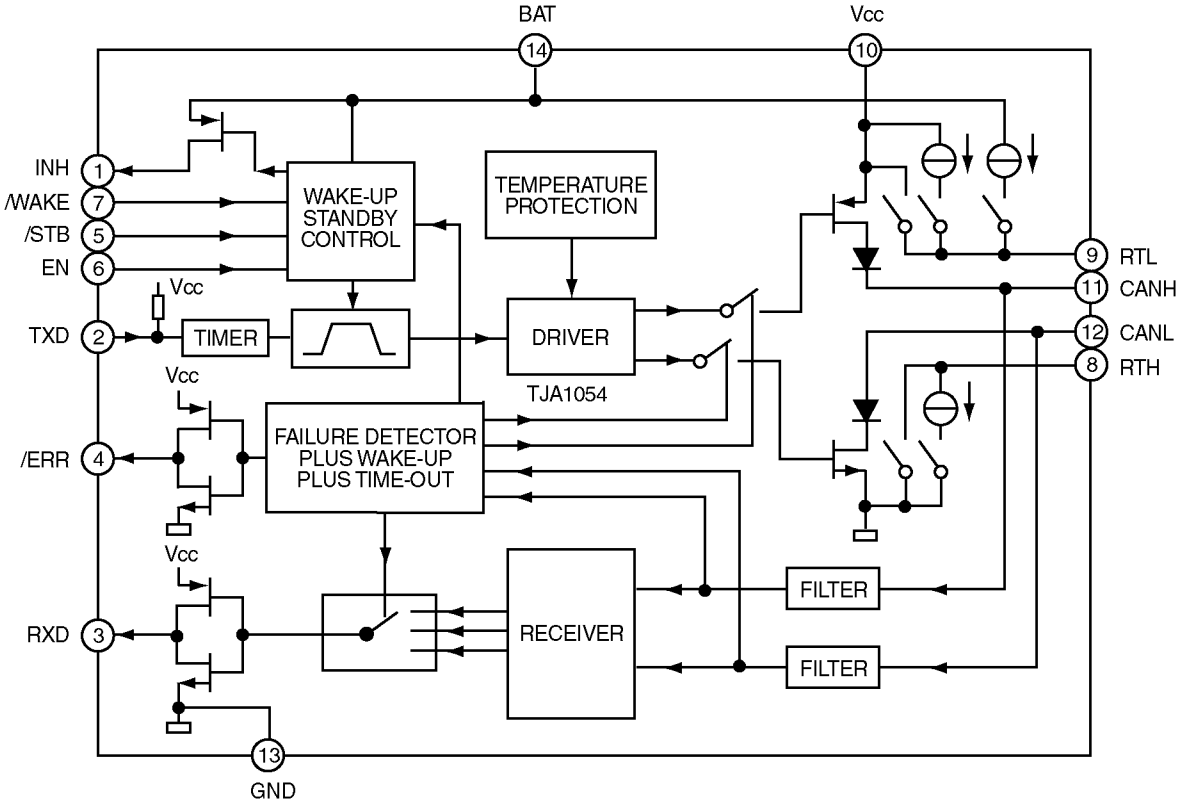
BAT
14
Vcc
10
INH
1
/WAKE
7
/STB
5
EN
6
WAKE-UP
STANDBY
CONTROL
TEMPERATURE
PROTECTION
Vcc
TXD
2
TIMER
DRIVER
TJA1054
9
RTL
11
CANH
12
CANL
8
RTH
Vcc
/ERR
4
FAILURE DETECTOR
PLUS WAKE-UP
PLUS TIME-OUT
Vcc
RXD
3
RECEIVER
FILTER
FILTER
13
GND

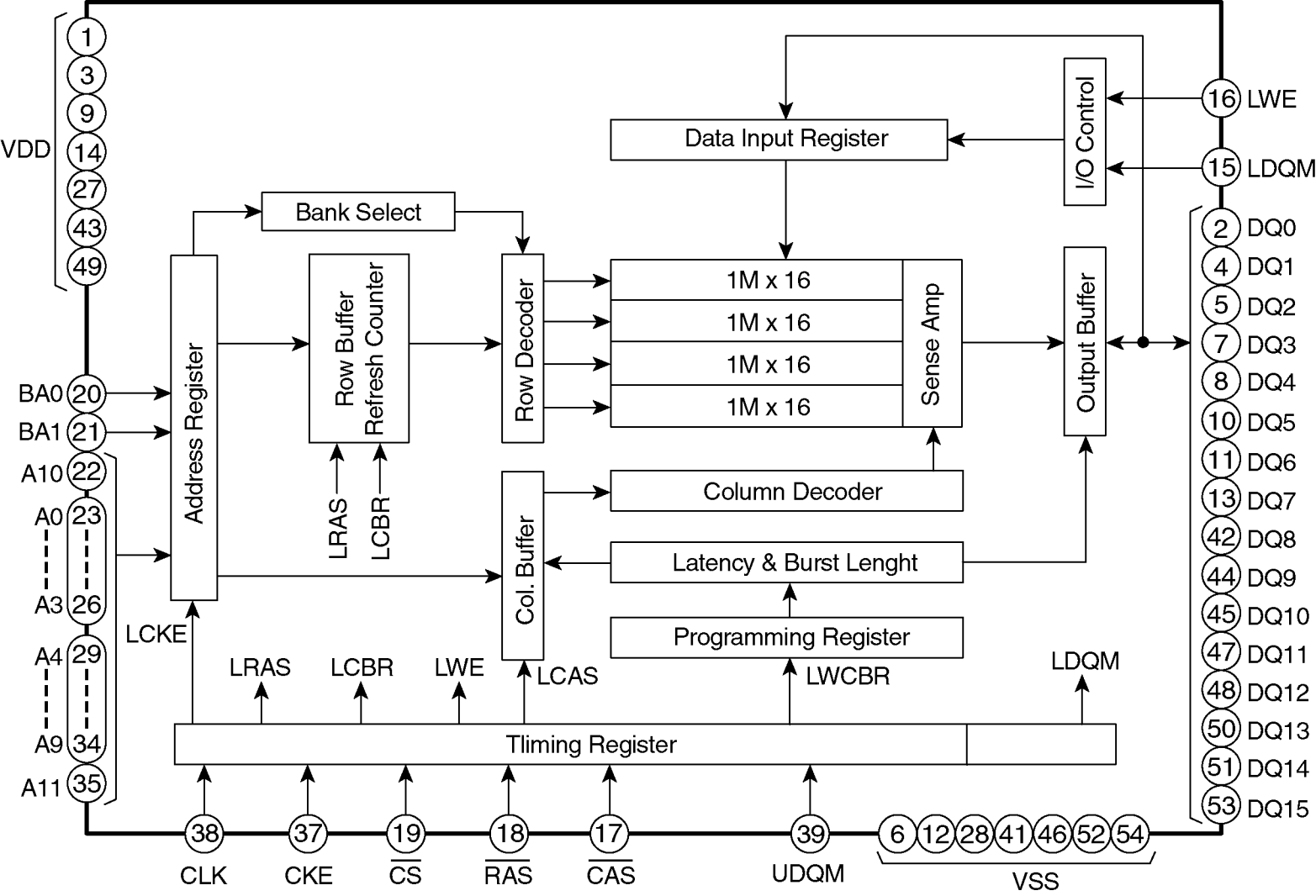
VDD
1
3
9
14
27
43
49
BA0 20
BA1 21
A10 22
A0 23
A3 26
A4 29
A9 34
A11 35
Bank Select
Address Register
Row Buffer
Refresh Counter
Row Decoder
LRAS
LCBR
Data Input Register
1M x 16
1M x 16
1M x 16
1M x 16
Sense Amp
I/O Control
Output Buffer
Column Decoder
Col. Buffer
Latency & Burst Lenght
Programming Register
LCKE
LRAS
LCBR
LWE
LCAS
LWCBR
LDQM
Tliming Register
16 LWE
15 LDQM
2 DQ0
4 DQ1
5 DQ2
7 DQ3
8 DQ4
10 DQ5
11 DQ6
13 DQ7
42 DQ8
44 DQ9
45 DQ10
47 DQ11
48 DQ12
50 DQ13
51 DQ14
53 DQ15
38 CLK
37 CKE
19 CS
18 RAS
17 CAS
39 UDQM
6 12 28 41 46 52 54
VSS

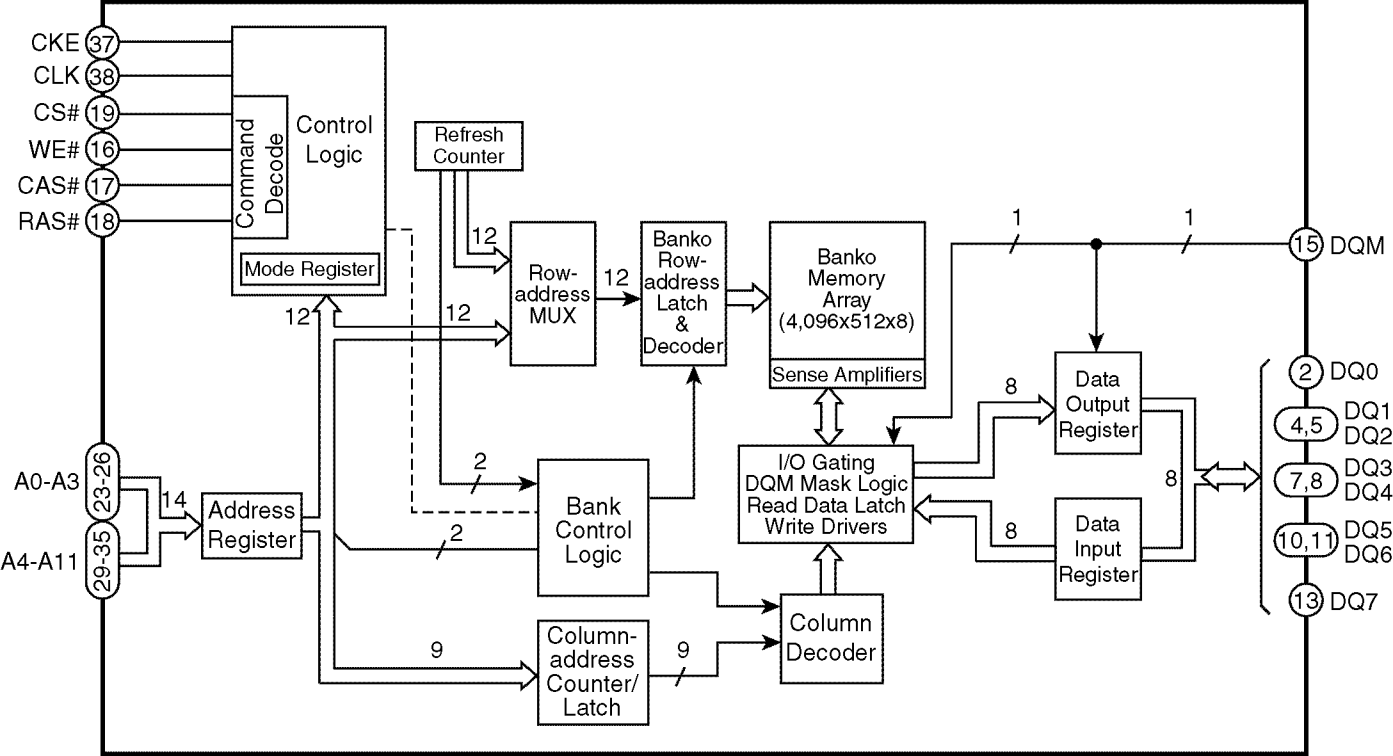
CKE
37
CLK
38
CS#
19
WE#
16
CAS#
17
RAS#
18
Command Decode
Control Logic
Mode Register
Refresh Counter
12
Row-address MUX
12
Banko Row-address Latch & Decoder
Banko Memory Array (4,096x512x8)
Sense Amplifiers
1
1
15
DQM
12
12
Data Output Register
8
2
DQ0
4,5
DQ1
DQ2
7,8
DQ3
DQ4
10,11
DQ5
DQ6
13
DQ7
A0-A3
23-26
A4-A11
29-35
14
Address Register
2
Bank Control Logic
2
I/O Gating
DQM Mask Logic
Read Data Latch
Write Drivers
8
8
Data Input Register
9
Column-address Counter/ Latch
9
Column Decoder

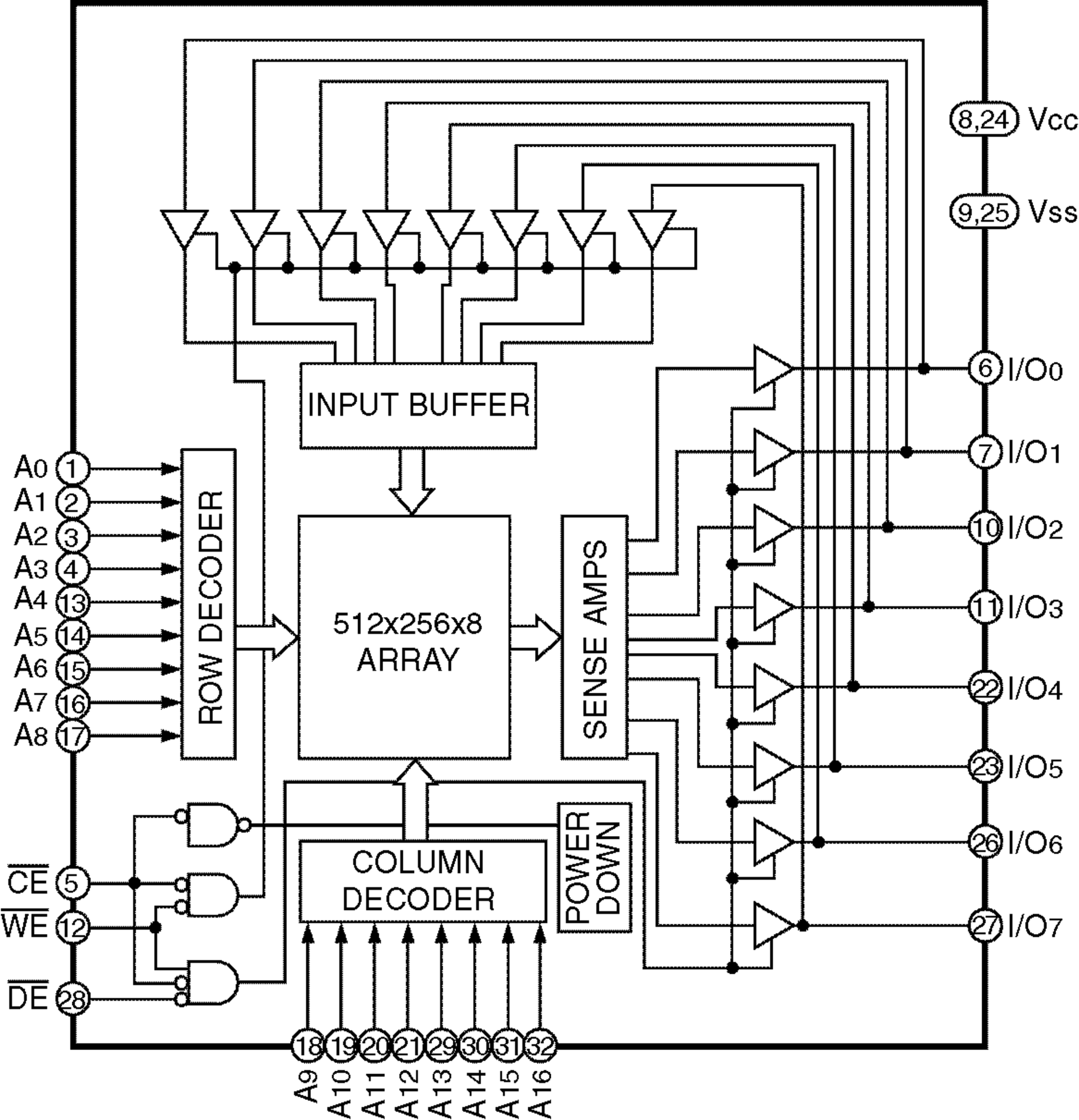
8,24 Vcc
9,25 Vss
INPUT BUFFER
A0 1
A1 2
A2 3
A3 4
A4 13
A5 14
A6 15
A7 16
A8 17
ROW DECODER
512x256x8
ARRAY
SENSE AMPS
6 I/O0
7 I/O1
10 I/O2
11 I/O3
22 I/O4
23 I/O5
26 I/O6
27 I/O7
CE 5
WE 12
DE 28
COLUMN
DECODER
POWER
DOWN
18 19 20 21 29 30 31 32
A9 A10 A11 A12 A13 A14 A15 A16

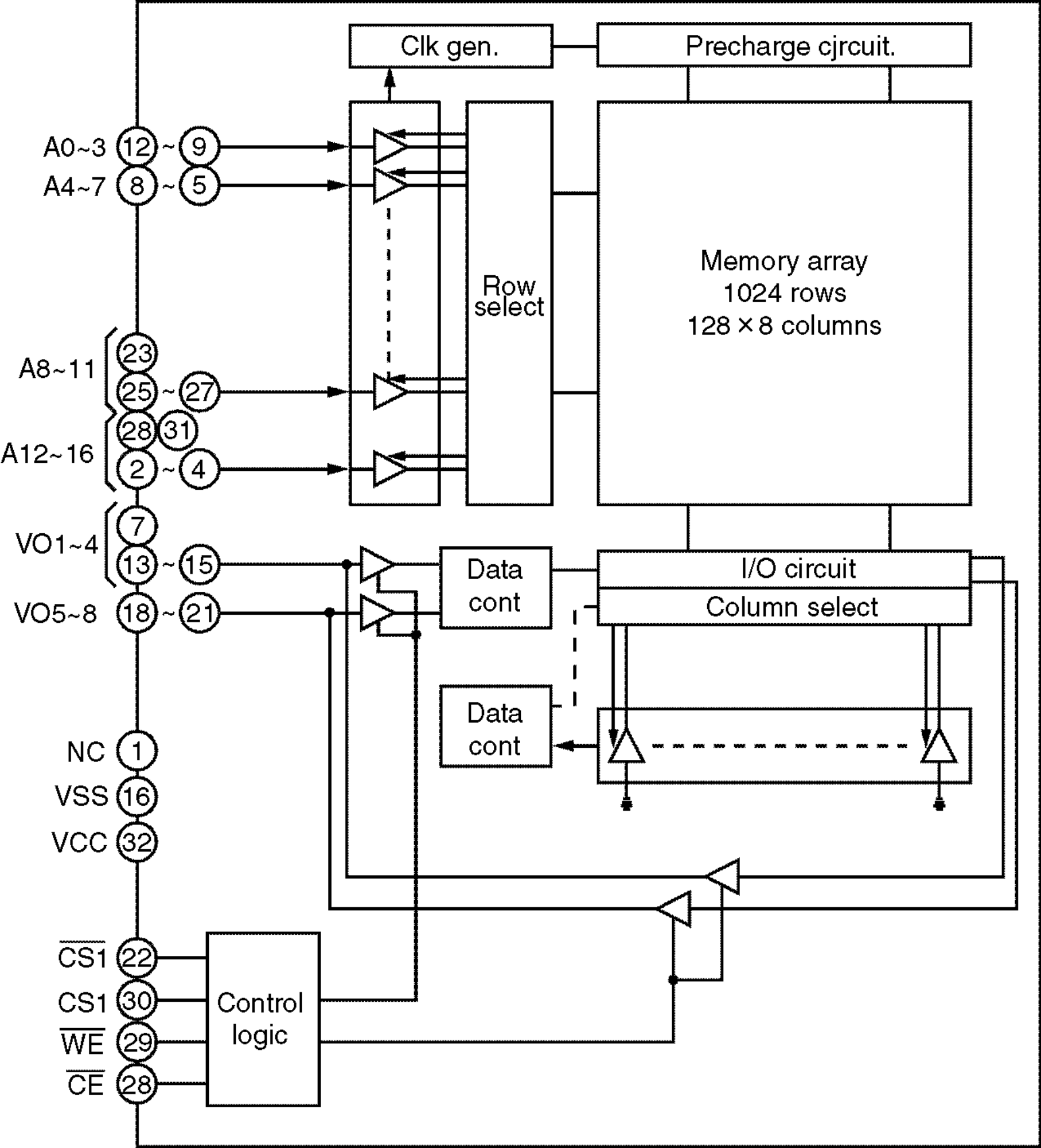
Clk gen.
Precharge cjrcuit.
A0~3
12
~
9
A4~7
8
~
5
Row select
Memory array
1024 rows
128 × 8 columns
A8~11
23
25
~
27
28
31
A12~16
2
~
4
VO1~4
7
13
~
15
VO5~8
18
~
21
Data cont
I/O circuit
Column select
Data cont
NC
1
VSS
16
VCC
32
CS1
22
CS1
30
WE
29
CE
28
Control logic

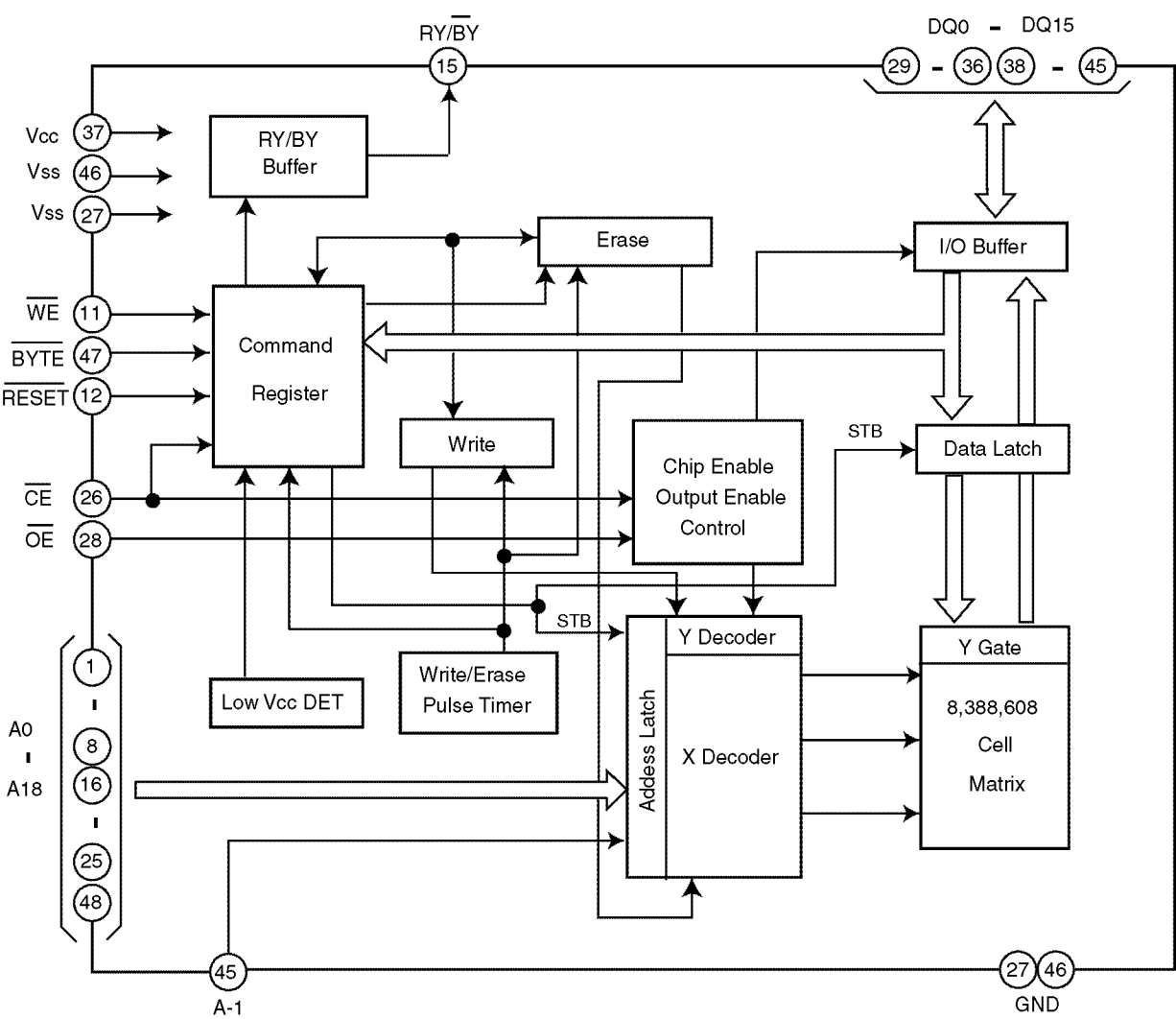
RY/BY
15
DQ0 - DQ15
29 - 36 38 - 45
Vcc 37
Vss 46
Vss 27
RY/BY Buffer
Erase
I/O Buffer
WE 11
BYTE 47
RESET 12
Command Register
Write
STB
Data Latch
Chip Enable Output Enable Control
CE 26
OE 28
STB
Y Decoder
Y Gate
Low Vcc DET
Write/Erase Pulse Timer
Addess Latch
X Decoder
8,388,608 Cell Matrix
A0 - A18
1 - 8 16 - 25 48
45
A-1
27 46
GND

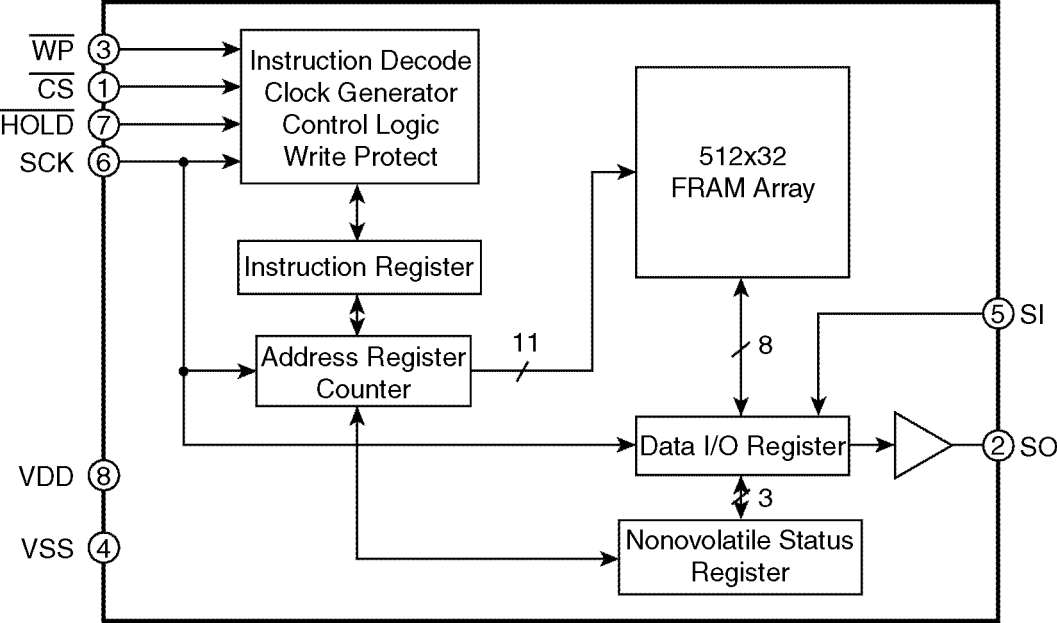
WP
3
CS
1
HOLD
7
SCK
6
Instruction Decode
Clock Generator
Control Logic
Write Protect
512x32
FRAM Array
Instruction Register
Address Register
Counter
11
8
5
SI
Data I/O Register
2
SO
VDD
8
3
VSS
4
Nonovolatile Status
Register

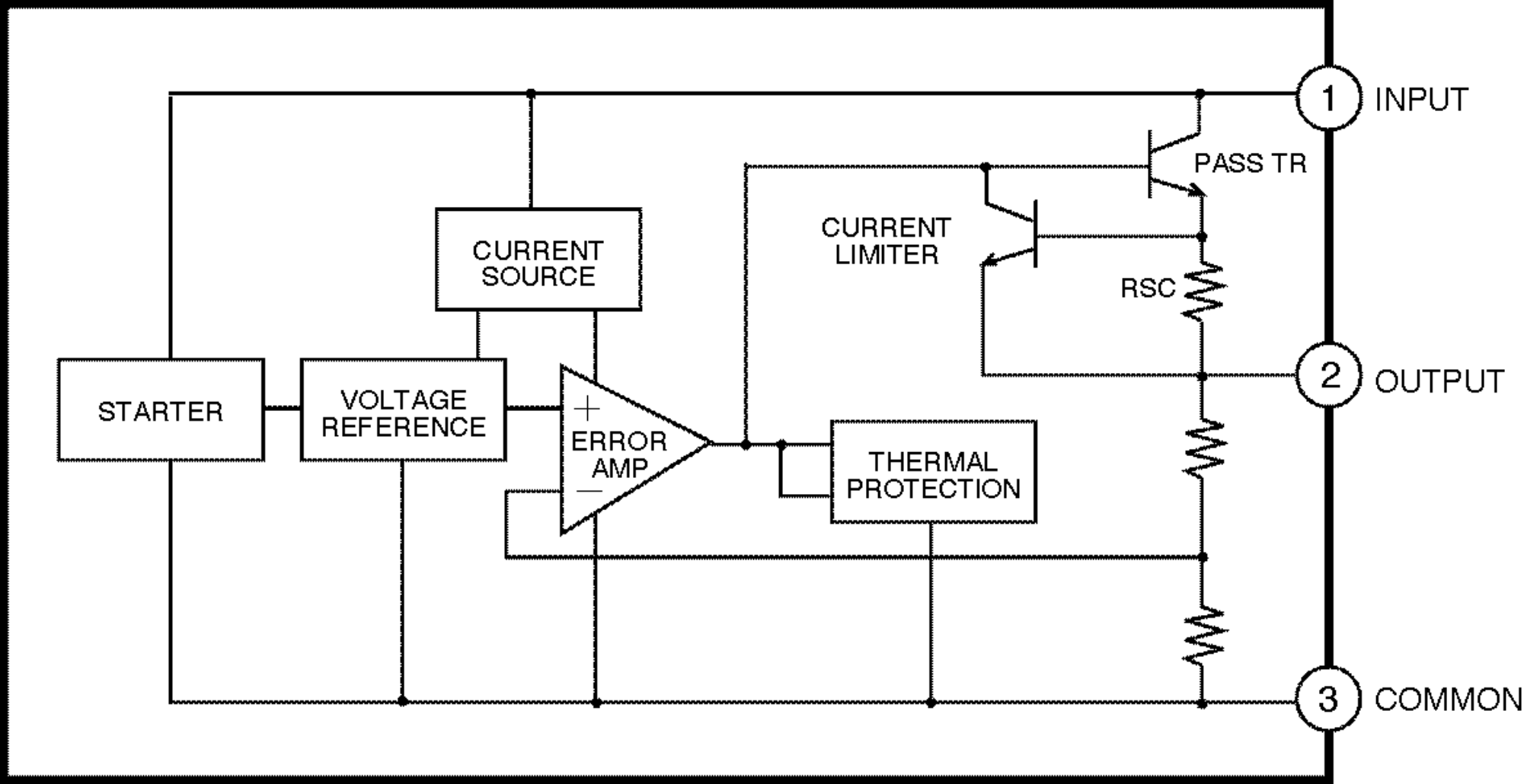
1
INPUT
PASS TR
CURRENT
LIMITER
CURRENT
SOURCE
RSC
2
OUTPUT
STARTER
VOLTAGE
REFERENCE
+
ERROR
AMP
—
THERMAL
PROTECTION
3
COMMON

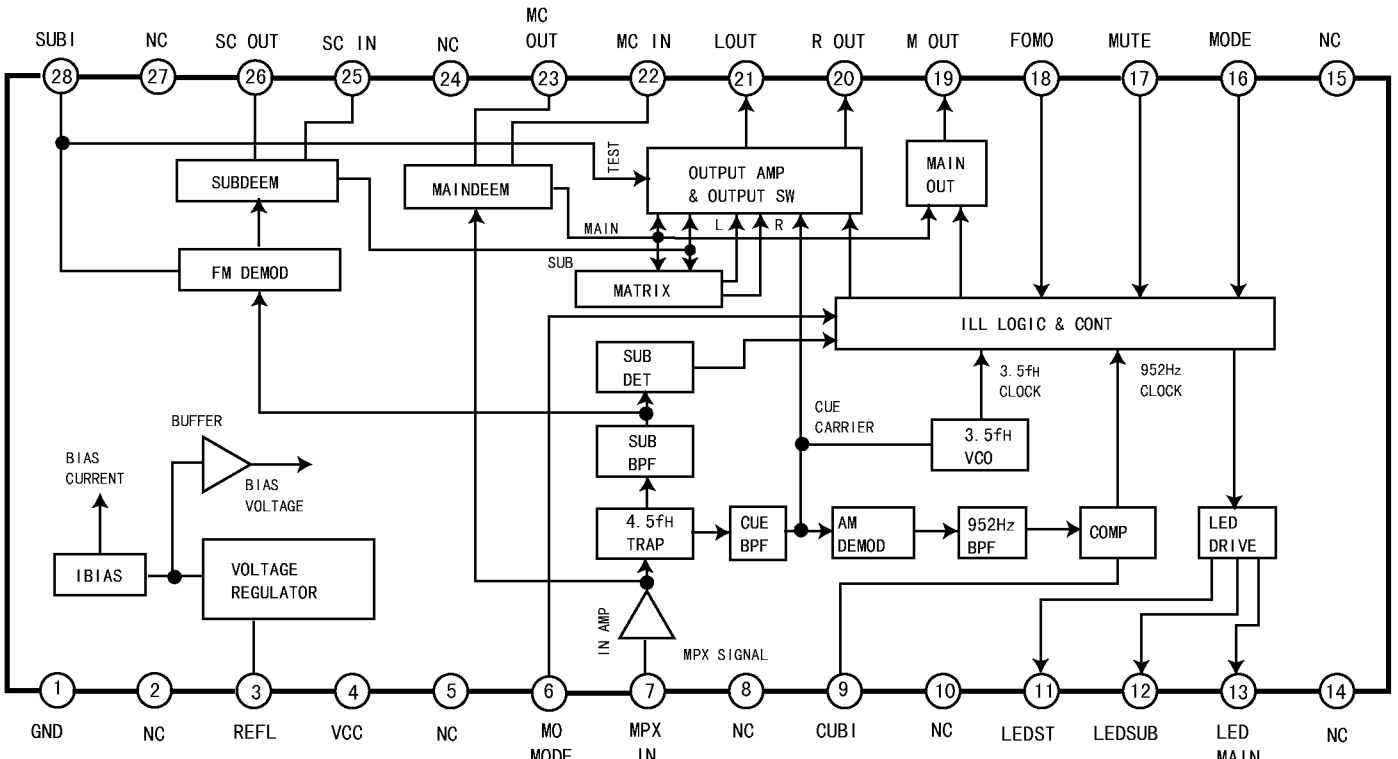
SUBI
NC
SC OUT
SC IN
NC
MC OUT
MC IN
LOUT
R OUT
M OUT
FOMO
MUTE
MODE
NC
28
27
26
25
24
23
22
21
20
19
18
17
16
15
SUBDEEM
MAINDEEM
TEST
OUTPUT AMP & OUTPUT SW
MAIN OUT
MAIN
L
R
SUB
FM DEMOD
MATRIX
ILL LOGIC & CONT
SUB DET
3.5fH CLOCK
952Hz CLOCK
CUE CARRIER
3.5fH VCO
BUFFER
BIAS CURRENT
BIAS VOLTAGE
SUB BPF
4.5fH TRAP
CUE BPF
AM DEMOD
952Hz BPF
COMP
LED DRIVE
IBIAS
VOLTAGE REGULATOR
IN AMP
MPX SIGNAL
1
2
3
4
5
6
7
8
9
10
11
12
13
14
GND
NC
REFL
VCC
NC
MO MODE
MPX IN
NC
CUBI
NC
LEDST
LEDSUB
LED MAIN
NC

■ Display Unit

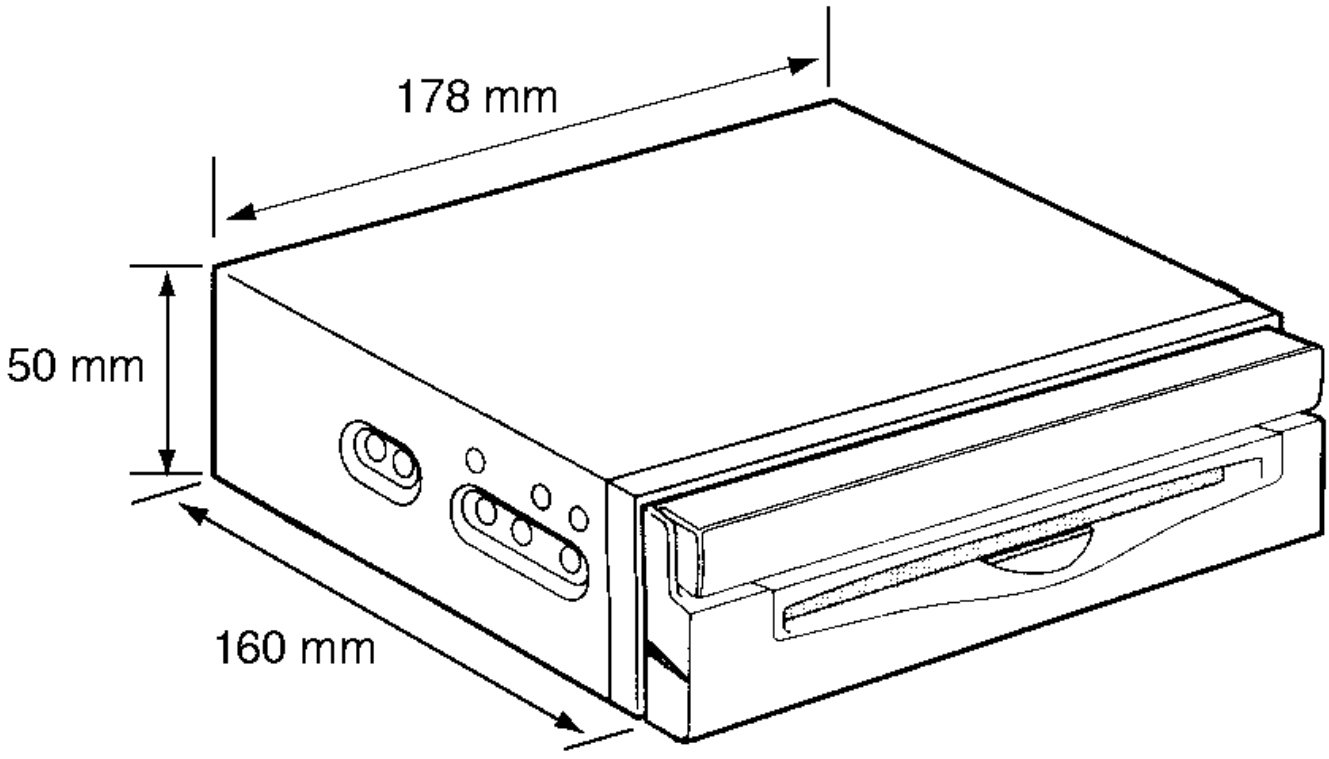

■ Hide-away Unit

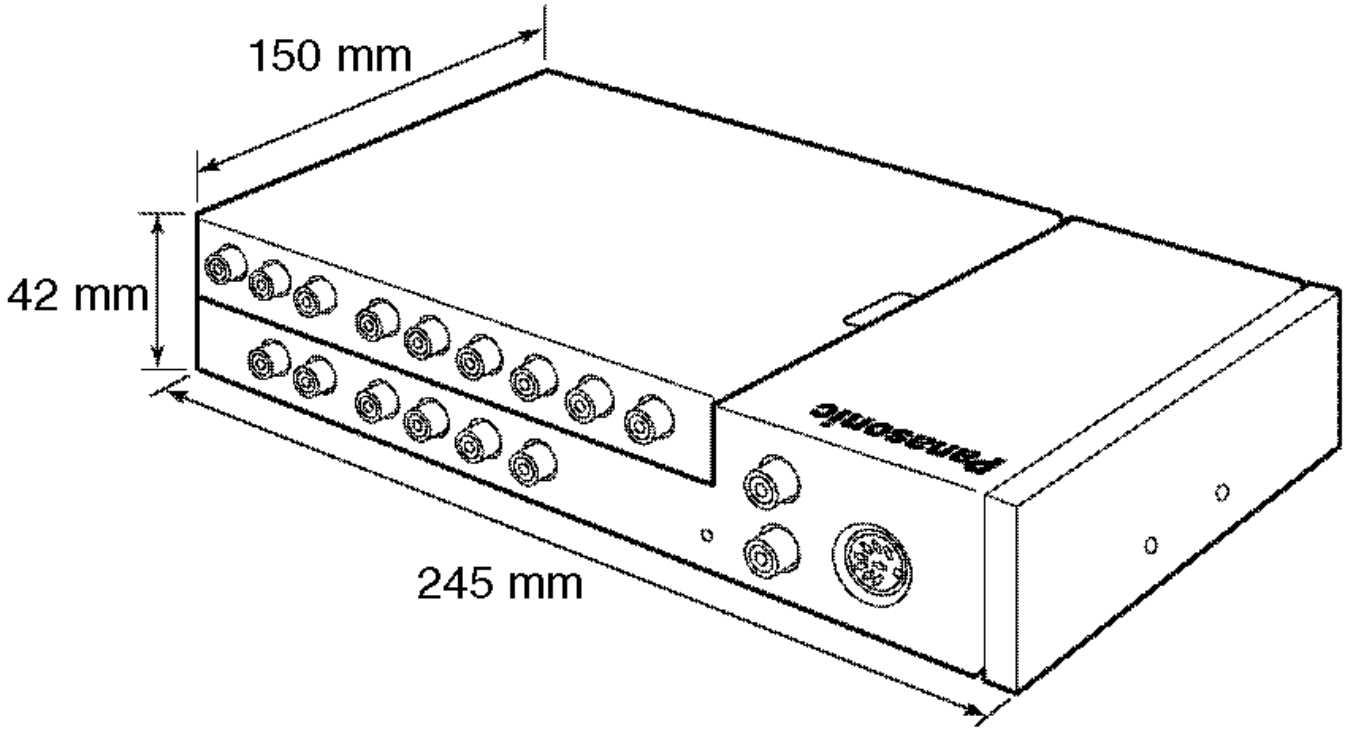

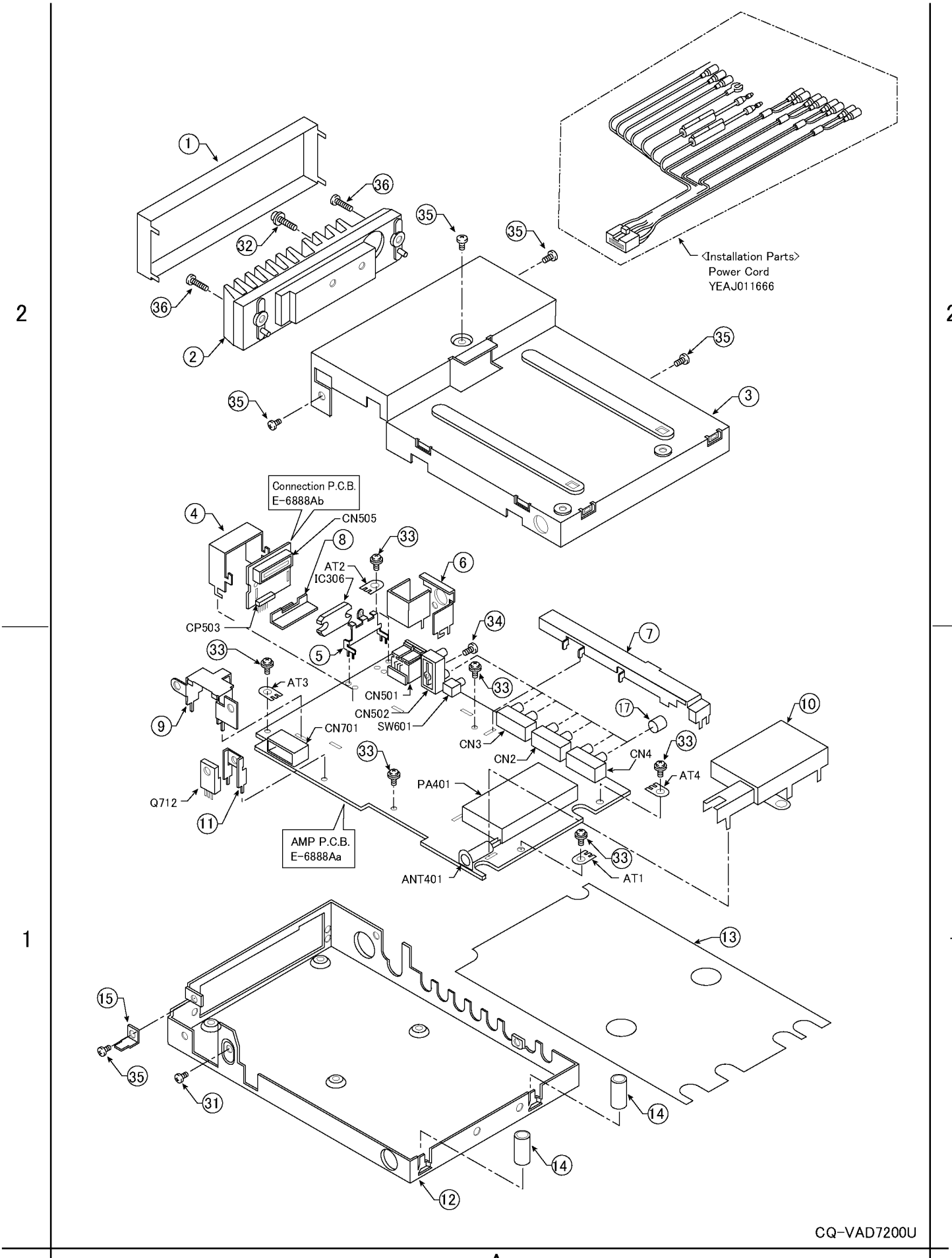
1
36
32
35
35
36
2
35
35
3
<Installation Parts>
Power Cord
YEAJ011666
Connection P.C.B.
E-6888Ab
4
CN505
8
33
AT2
IC306
6
CP503
34
7
33
5
AT3
33
CN501
CN502
SW601
9
CN701
17
10
CN3
CN2
CN4
33
33
AT4
PA401
Q712
11
AMP P.C.B.
E-6888Aa
33
ANT401
AT1
13
15
35
31
14
14
12
CQ-VAD7200U

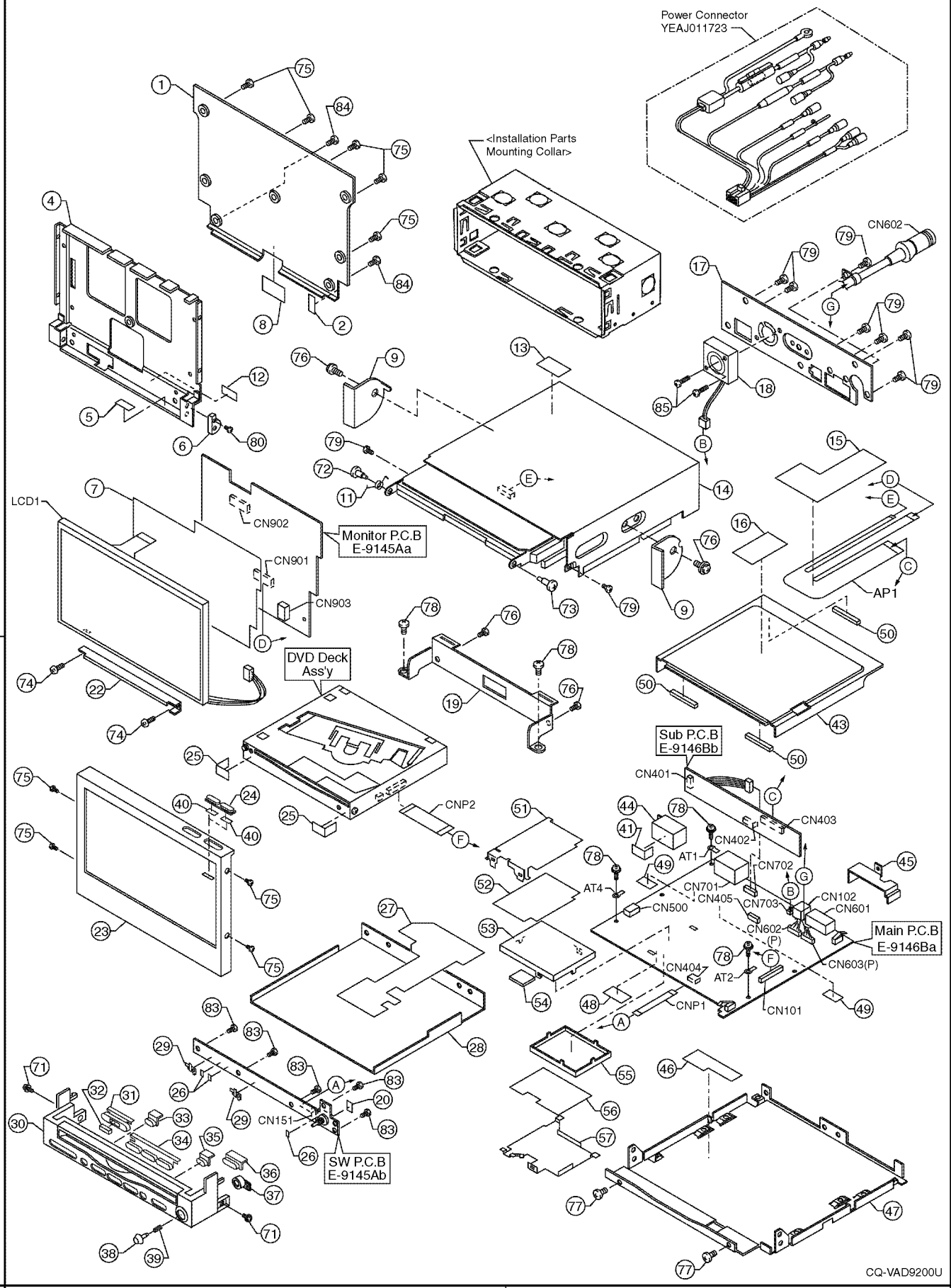
Power Connector
YEAJ011723
<Installation Parts
Mounting Collar>
CN602
LCD1
CN902
Monitor P.C.B
E-9145Aa
CN901
CN903
AP1
DVD Deck
Ass'y
CNP2
Sub P.C.B
E-9146Bb
CN401
CN403
CN402
AT1
CN702
CN701
CN405
CN703
CN102
CN601
CN500
AT4
CN602
(P)
Main P.C.B
E-9146Ba
CN603(P)
CN404
AT2
CN101
CNP1
CN151
SW P.C.B
E-9145Ab
CQ-VAD9200U

A B

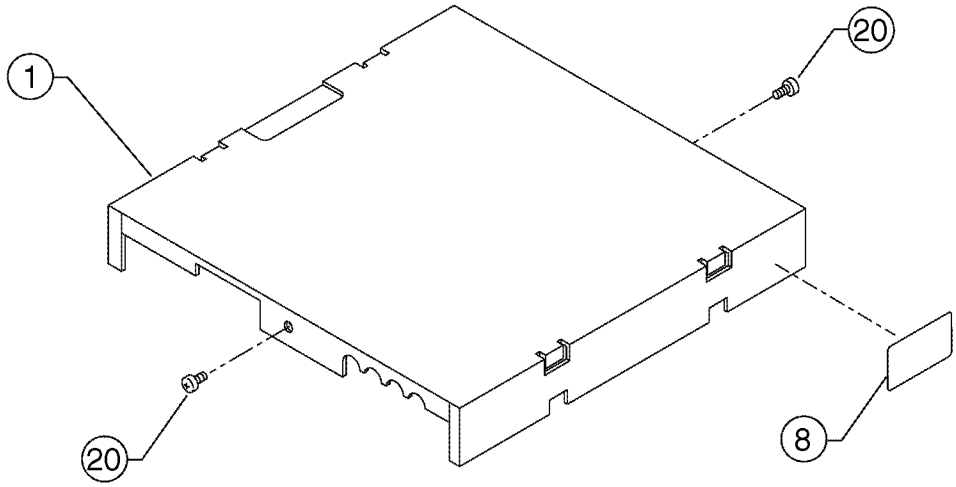

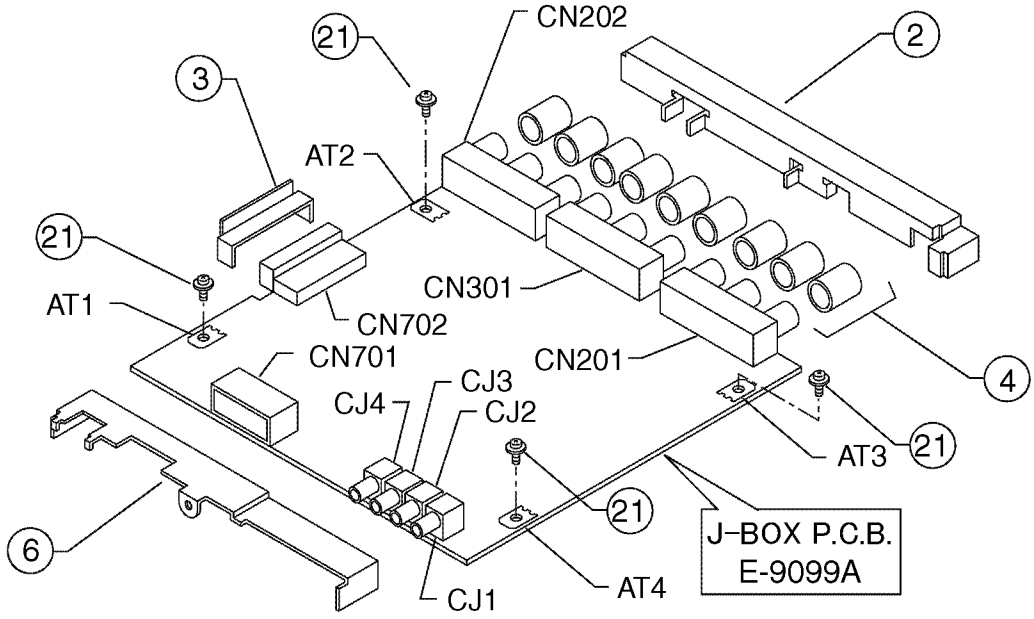

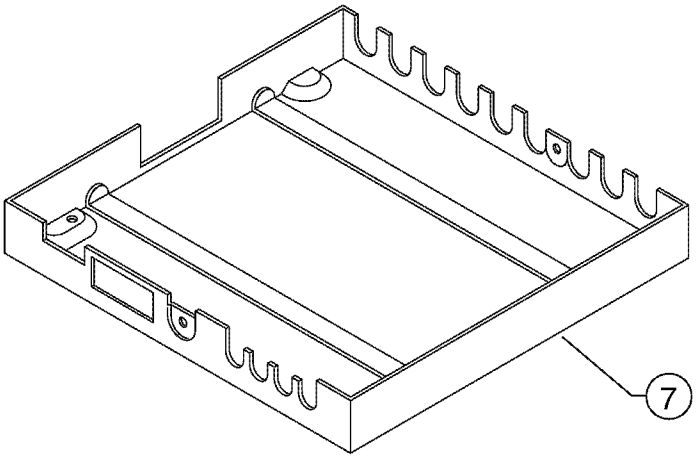

CQ-VAD7200U

A B

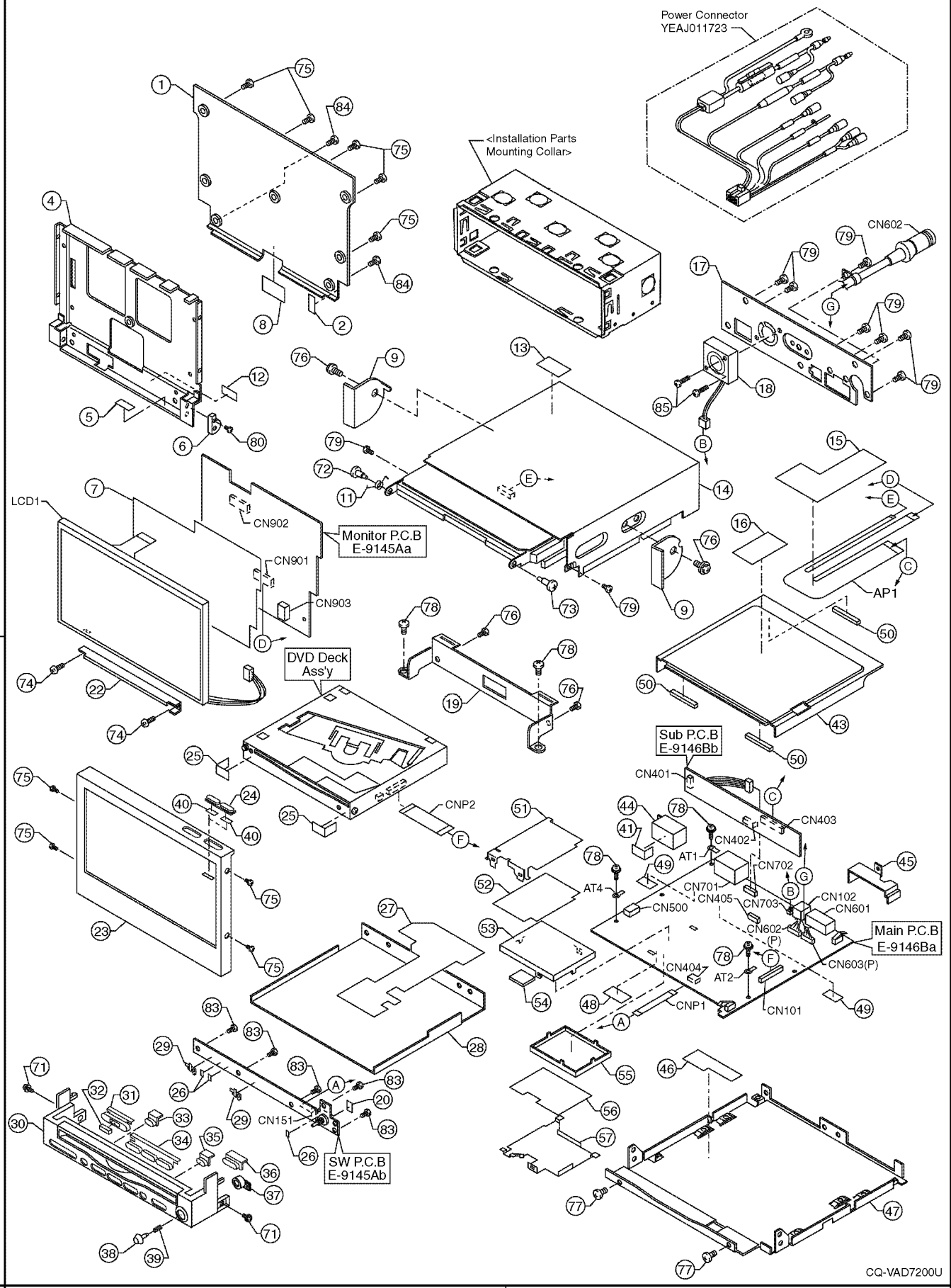
Power Connector
YEAJ011723
<Installation Parts
Mounting Collar>
CN602
LCD1
CN902
Monitor P.C.B
E-9145Aa
CN901
CN903
AP1
DVD Deck
Ass'y
CNP2
Sub P.C.B
E-9146Bb
CN401
CN403
CN402
AT1
CN702
CN701
CN405
CN703
CN102
CN601
CN500
AT4
CN602
(P)
Main P.C.B
E-9146Ba
CN603(P)
CN404
AT2
CN101
CNP1
CN151
SW P.C.B
E-9145Ab
CQ-VAD7200U

A B

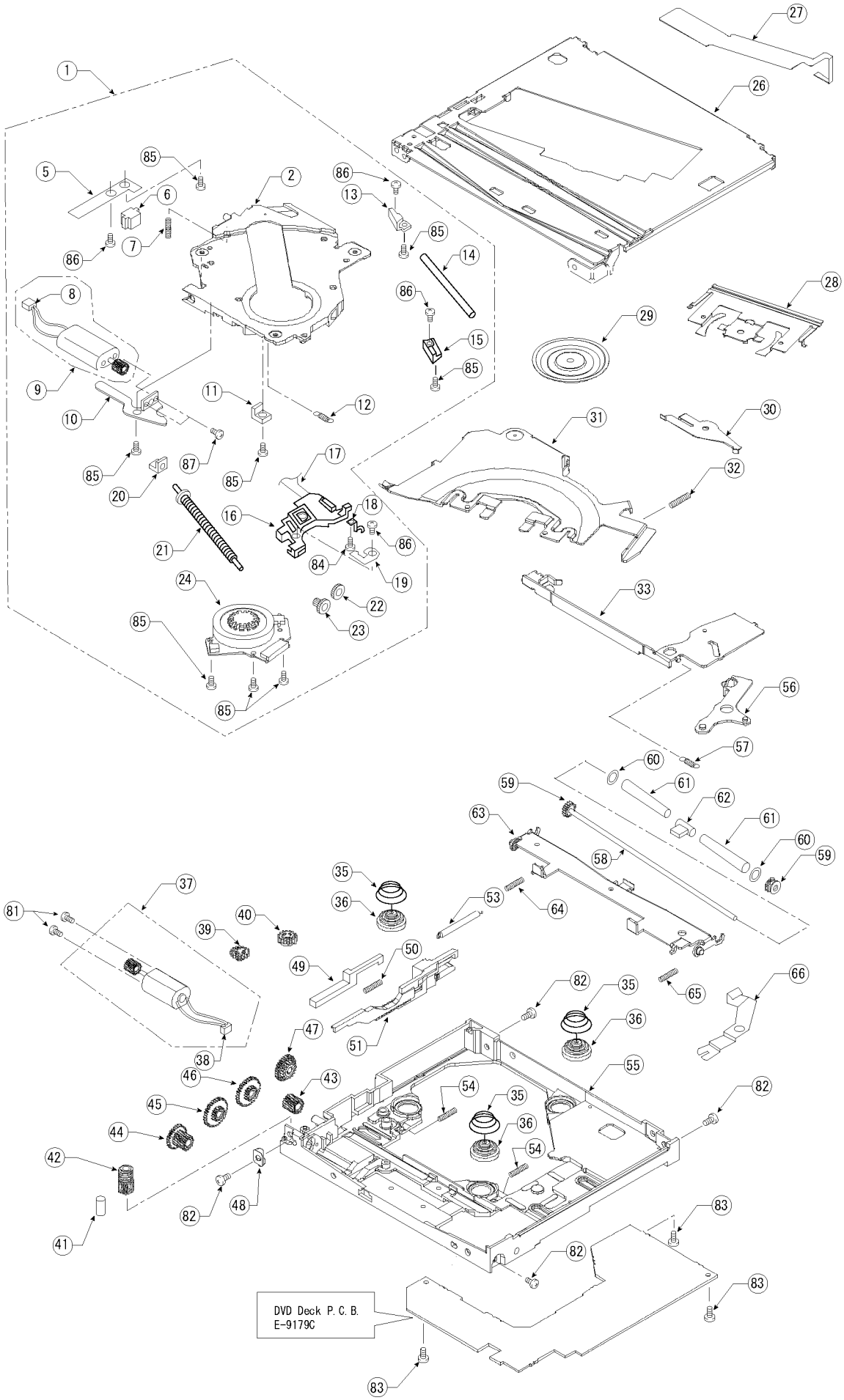

GFD19141
2002. 6. 14

A B

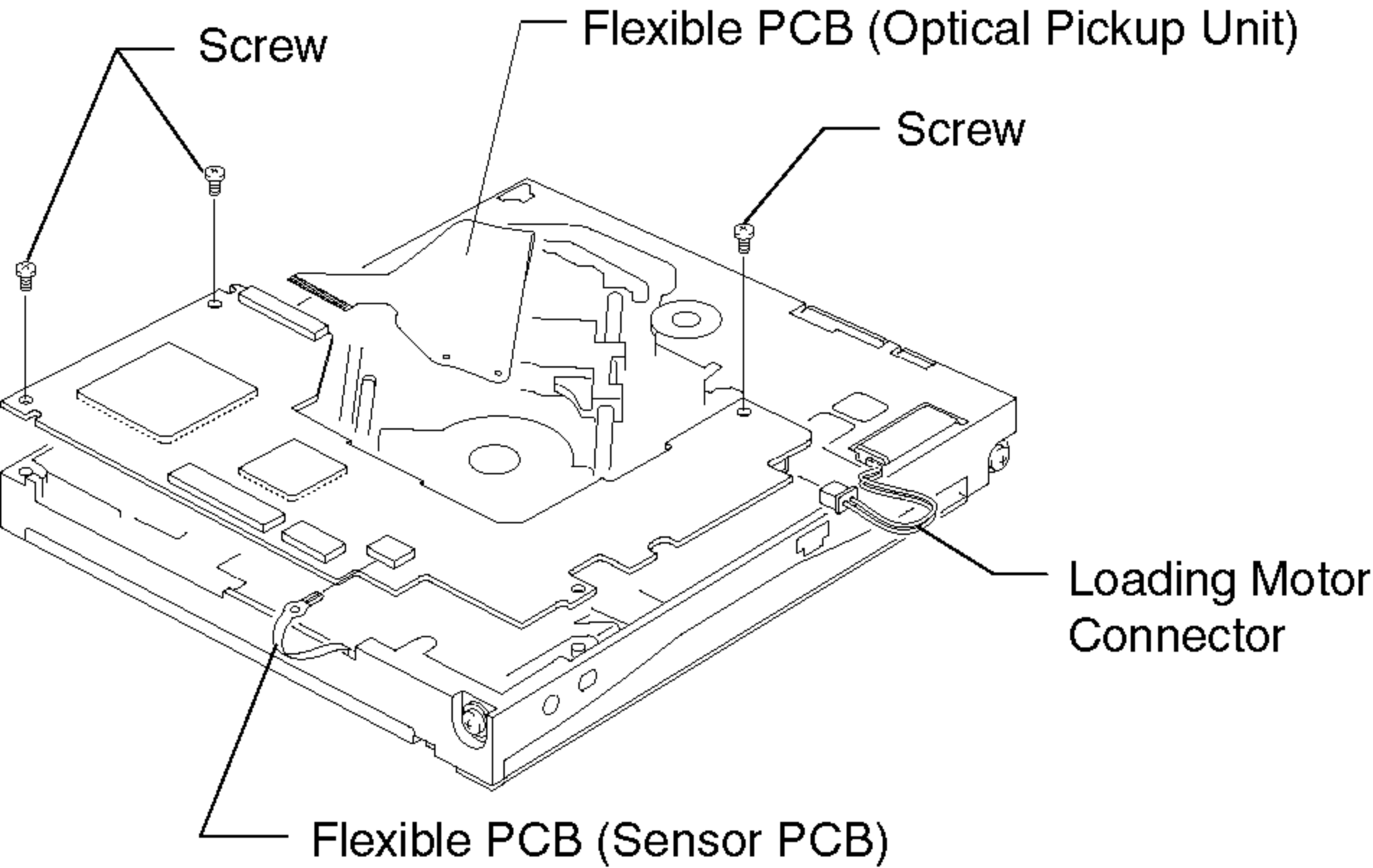
Screw
Flexible PCB (Optical Pickup Unit)
Screw
Loading Motor
Connector
Flexible PCB (Sensor PCB)

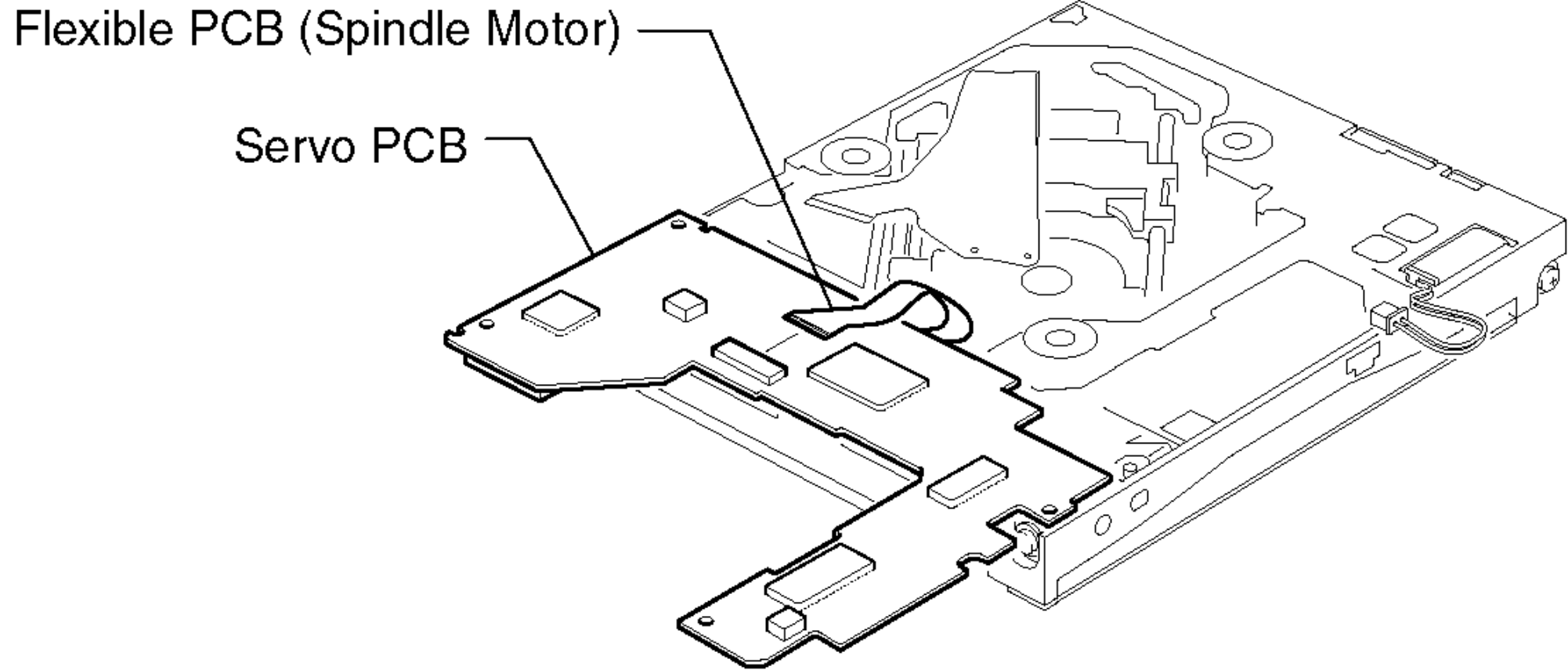
Flexible PCB (Spindle Motor)
Servo PCB

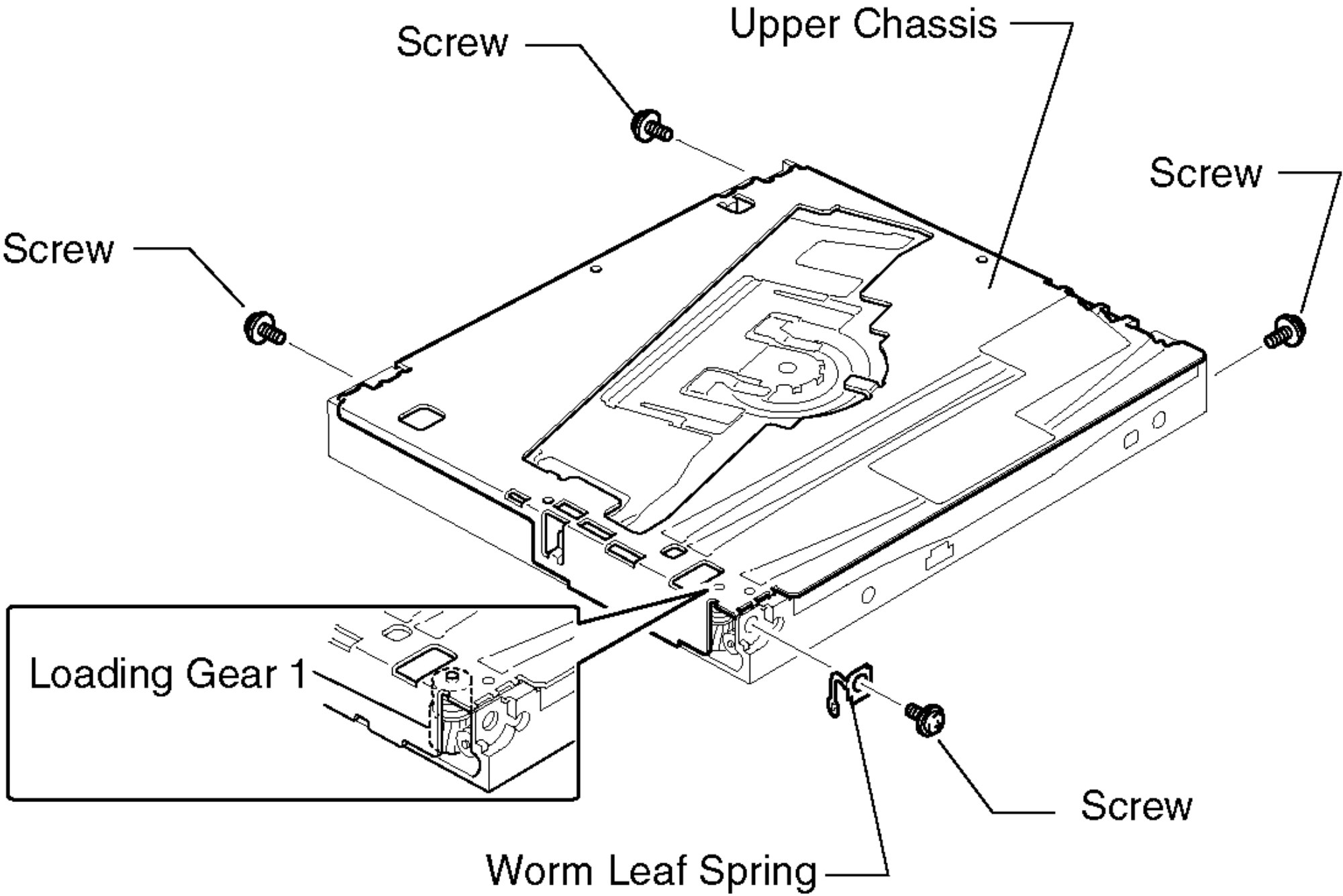
Screw
Upper Chassis
Screw
Screw
Loading Gear 1
Screw
Worm Leaf Spring

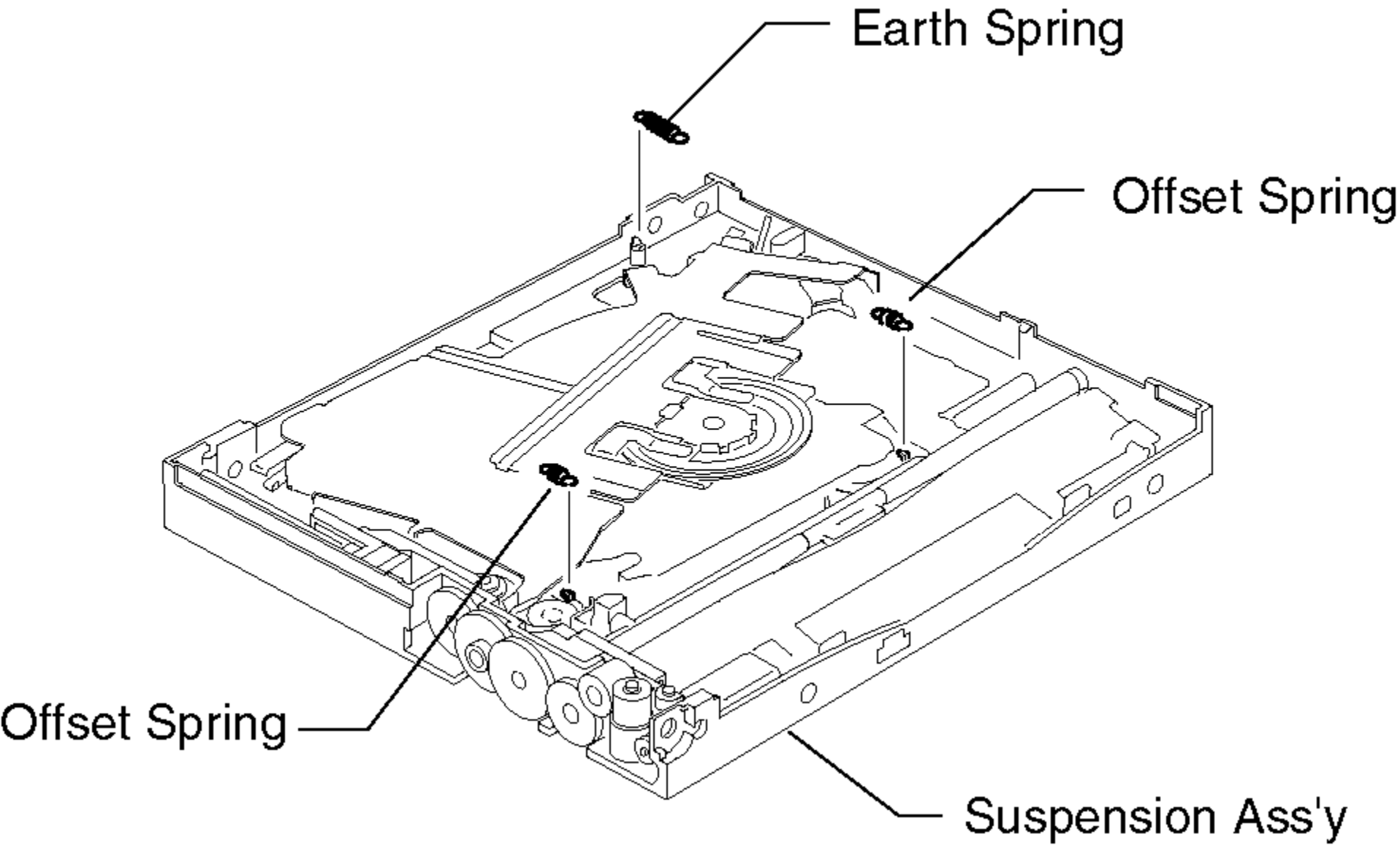
Earth Spring
Offset Spring
Offset Spring
Suspension Ass'y

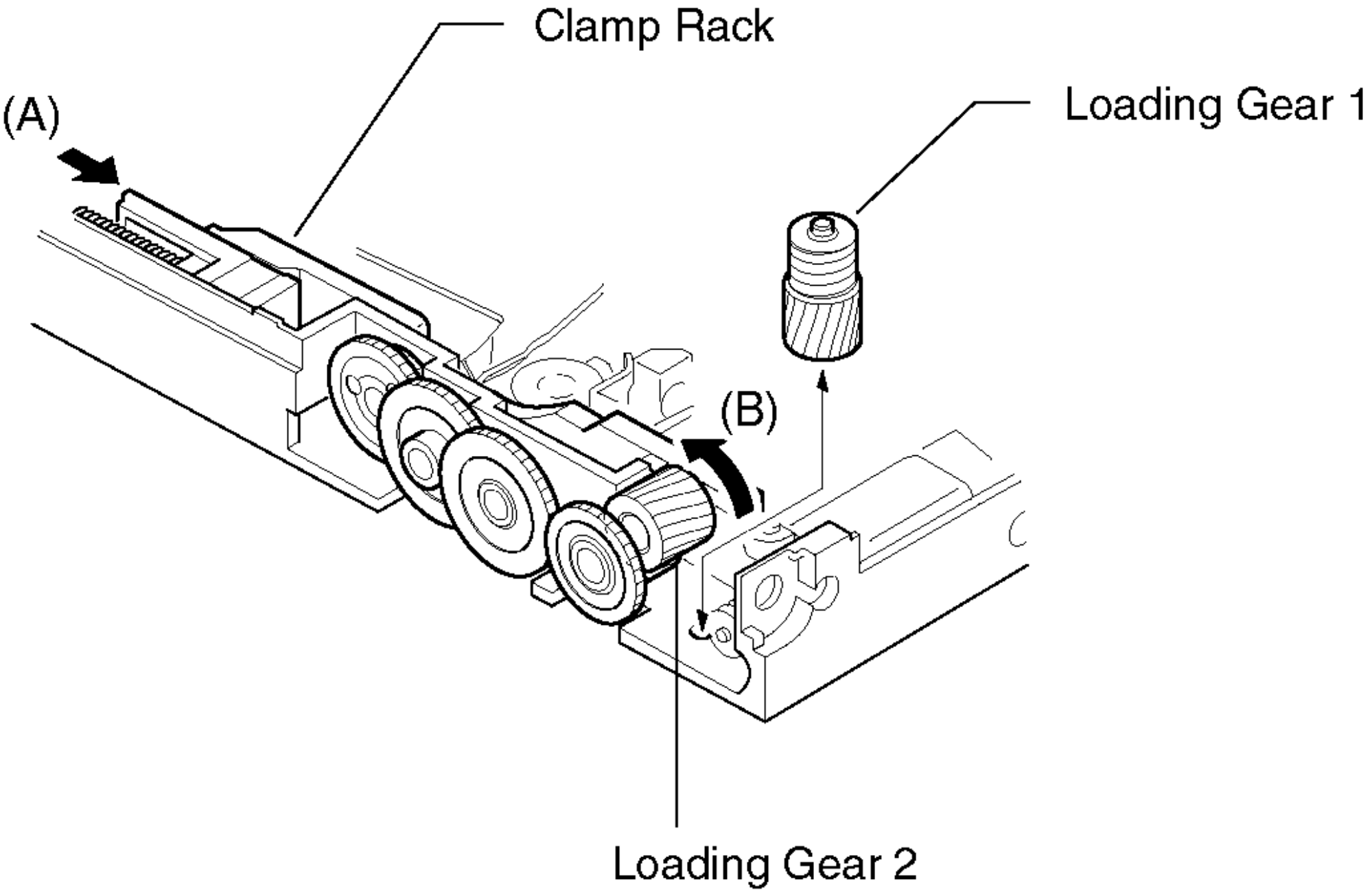
Clamp Rack
Loading Gear 1
(A)
(B)
Loading Gear 2

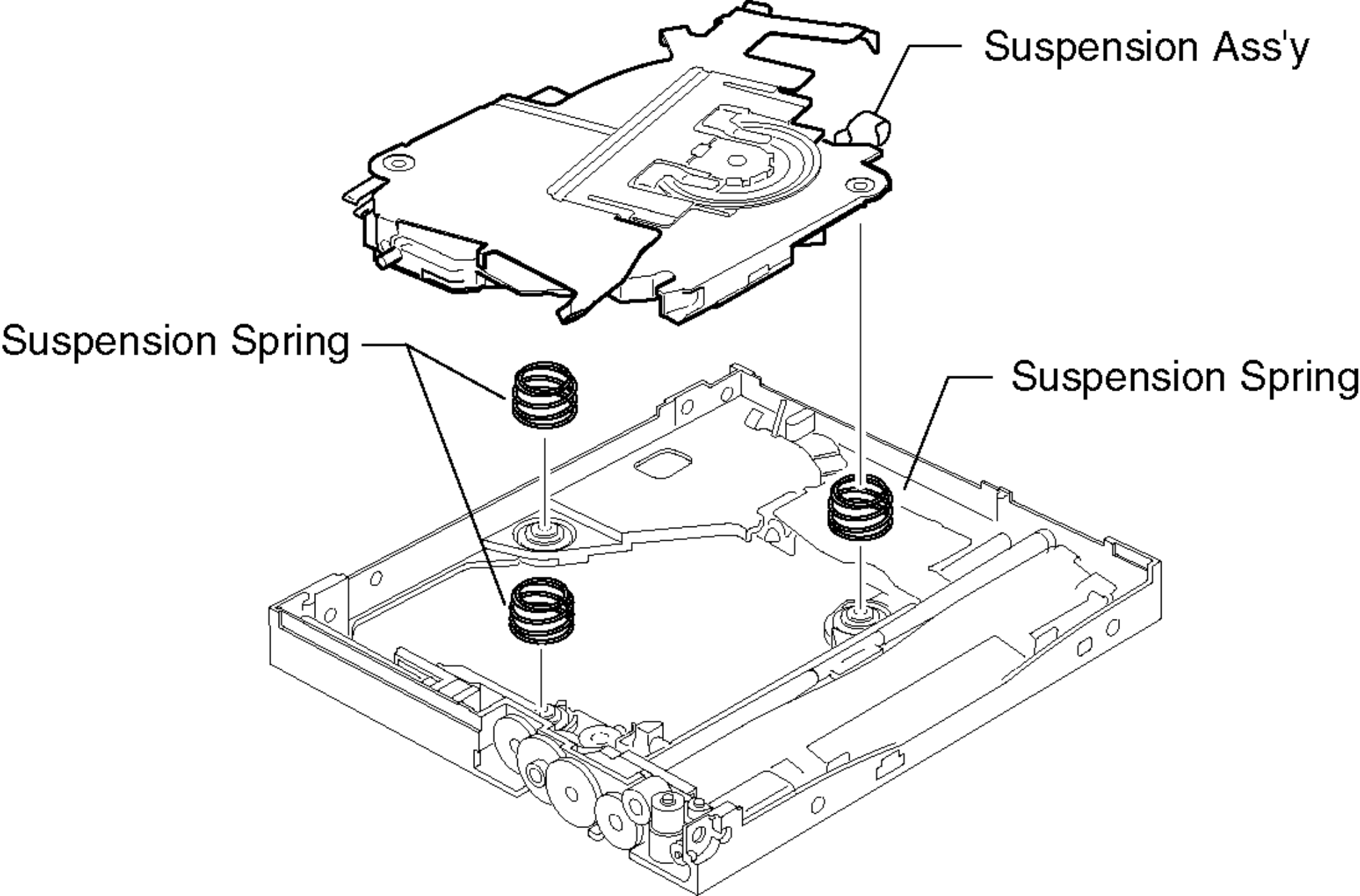
Suspension Ass'y
Suspension Spring
Suspension Spring

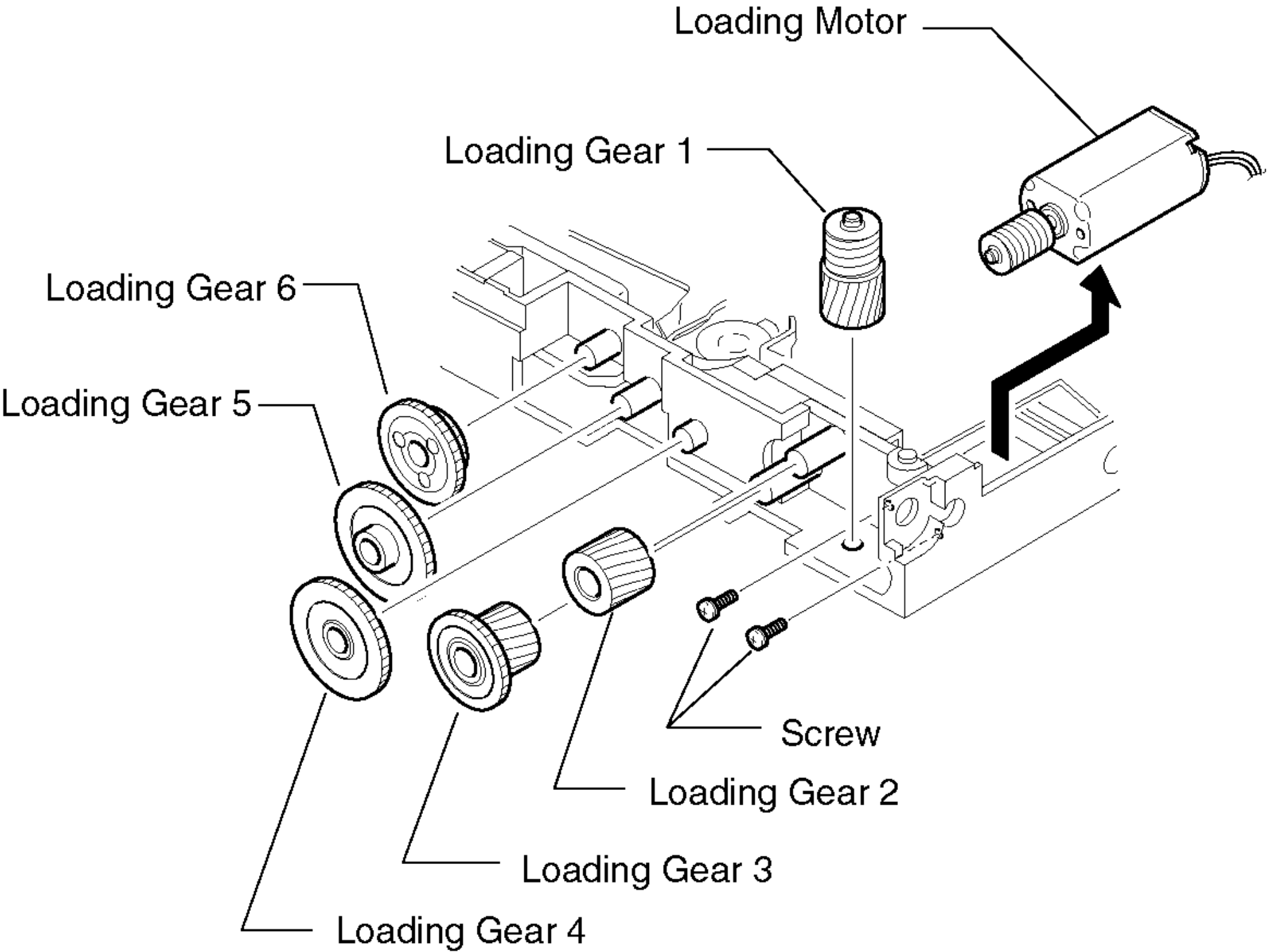
Loading Motor
Loading Gear 1
Loading Gear 6
Loading Gear 5
Screw
Loading Gear 2
Loading Gear 3
Loading Gear 4

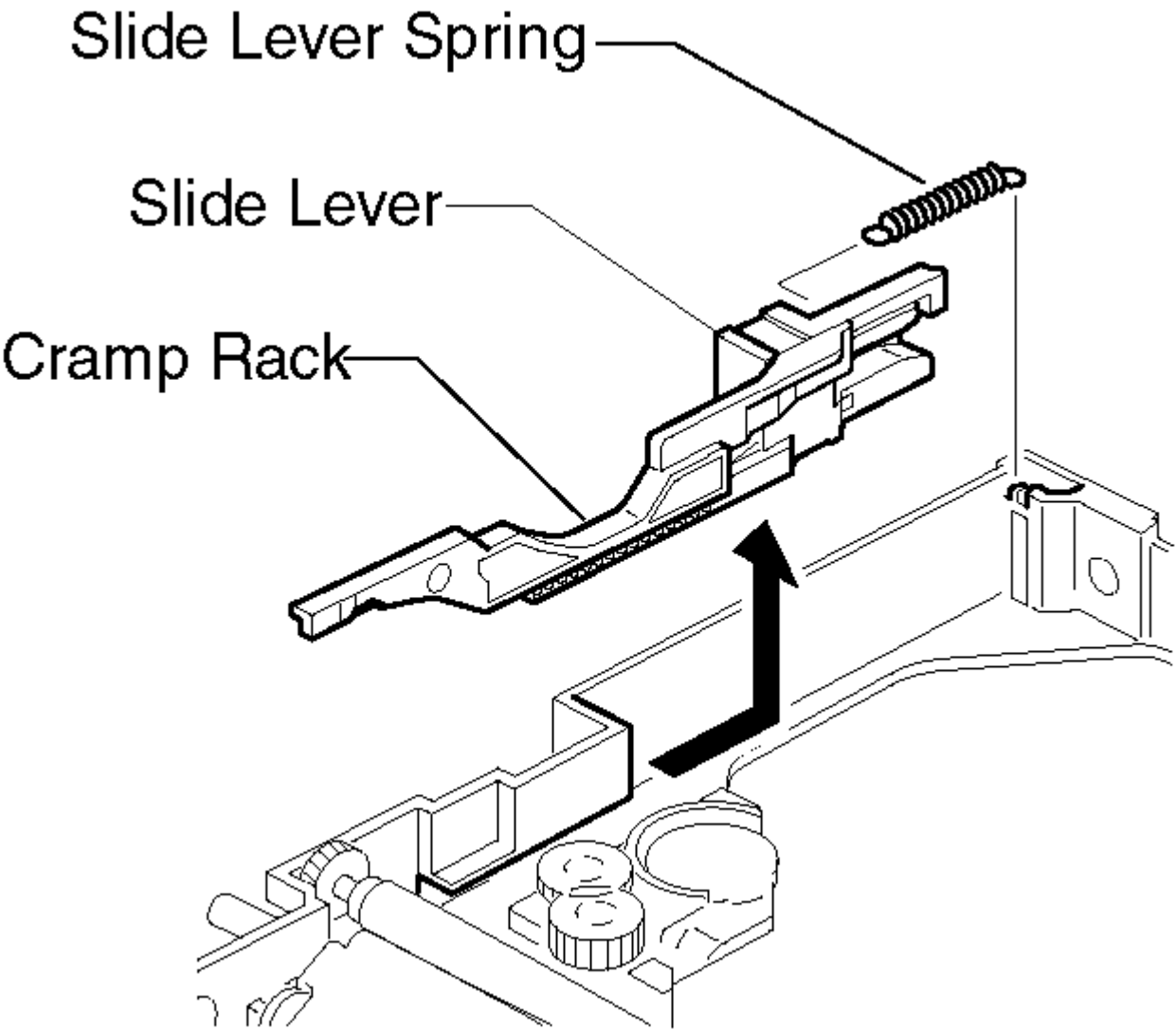
Slide Lever Spring
Slide Lever
Cramp Rack

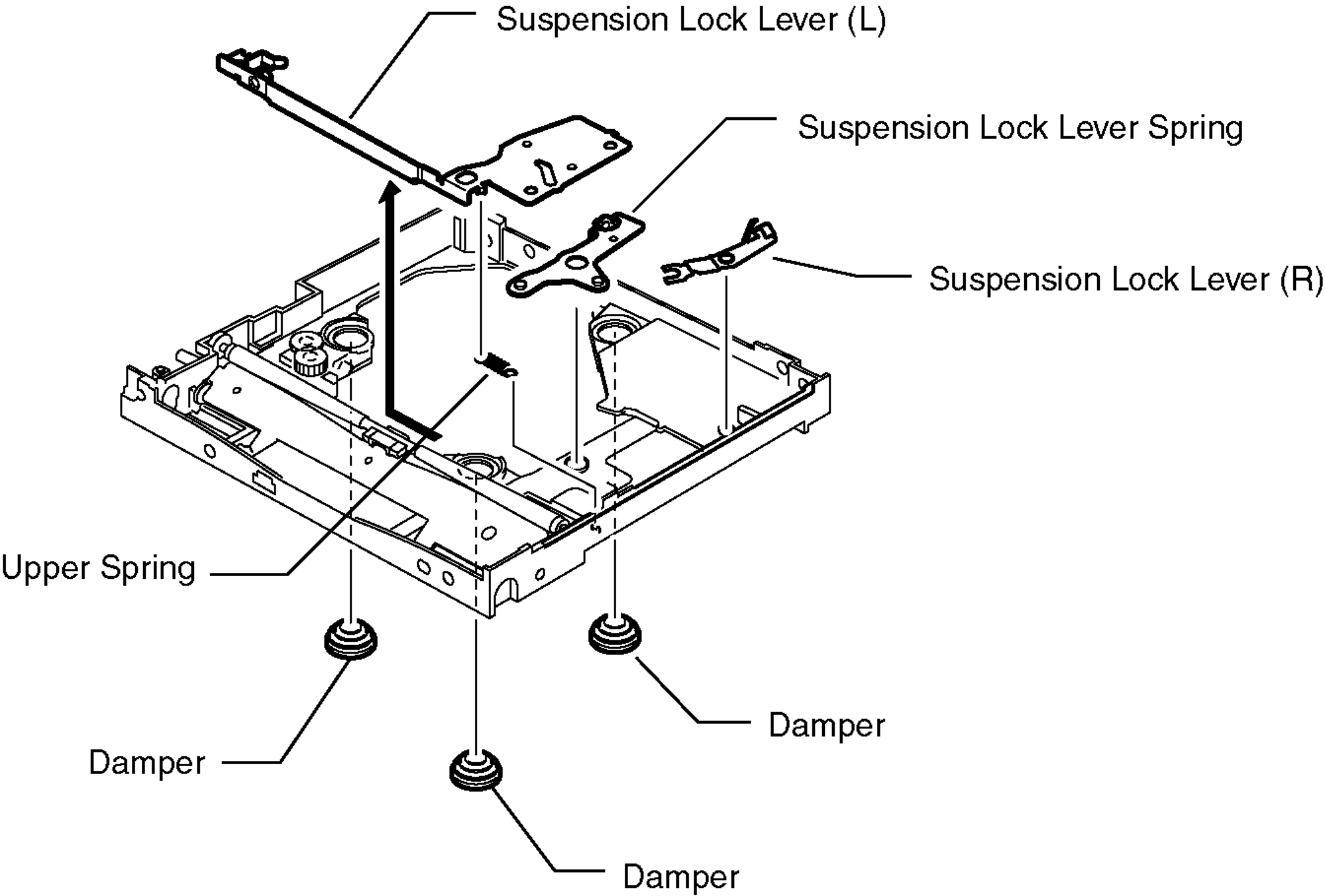
Suspension Lock Lever (L)
Suspension Lock Lever Spring
Suspension Lock Lever (R)
Upper Spring
Damper
Damper
Damper

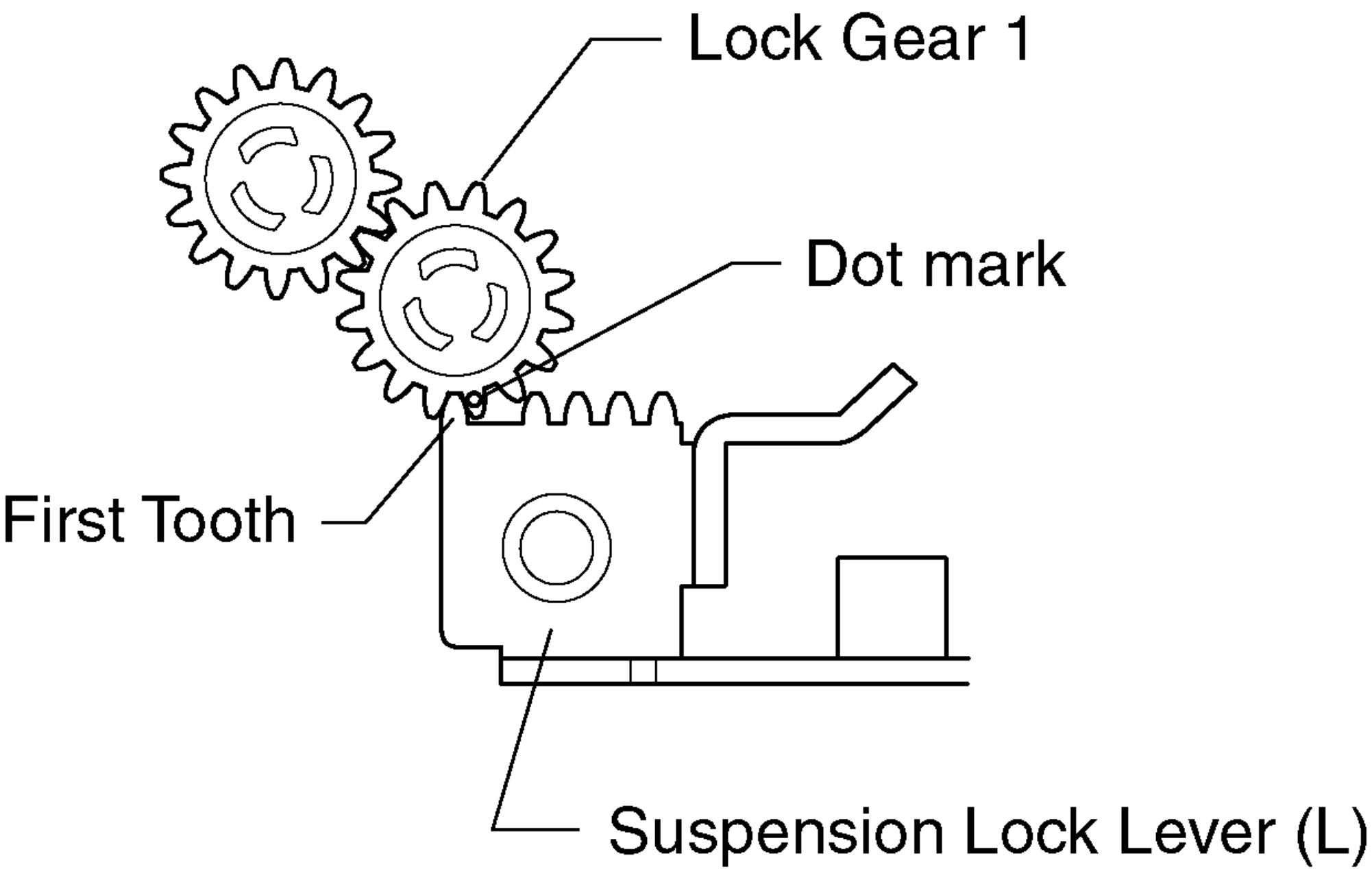
Lock Gear 1
Dot mark
First Tooth
Suspension Lock Lever (L)

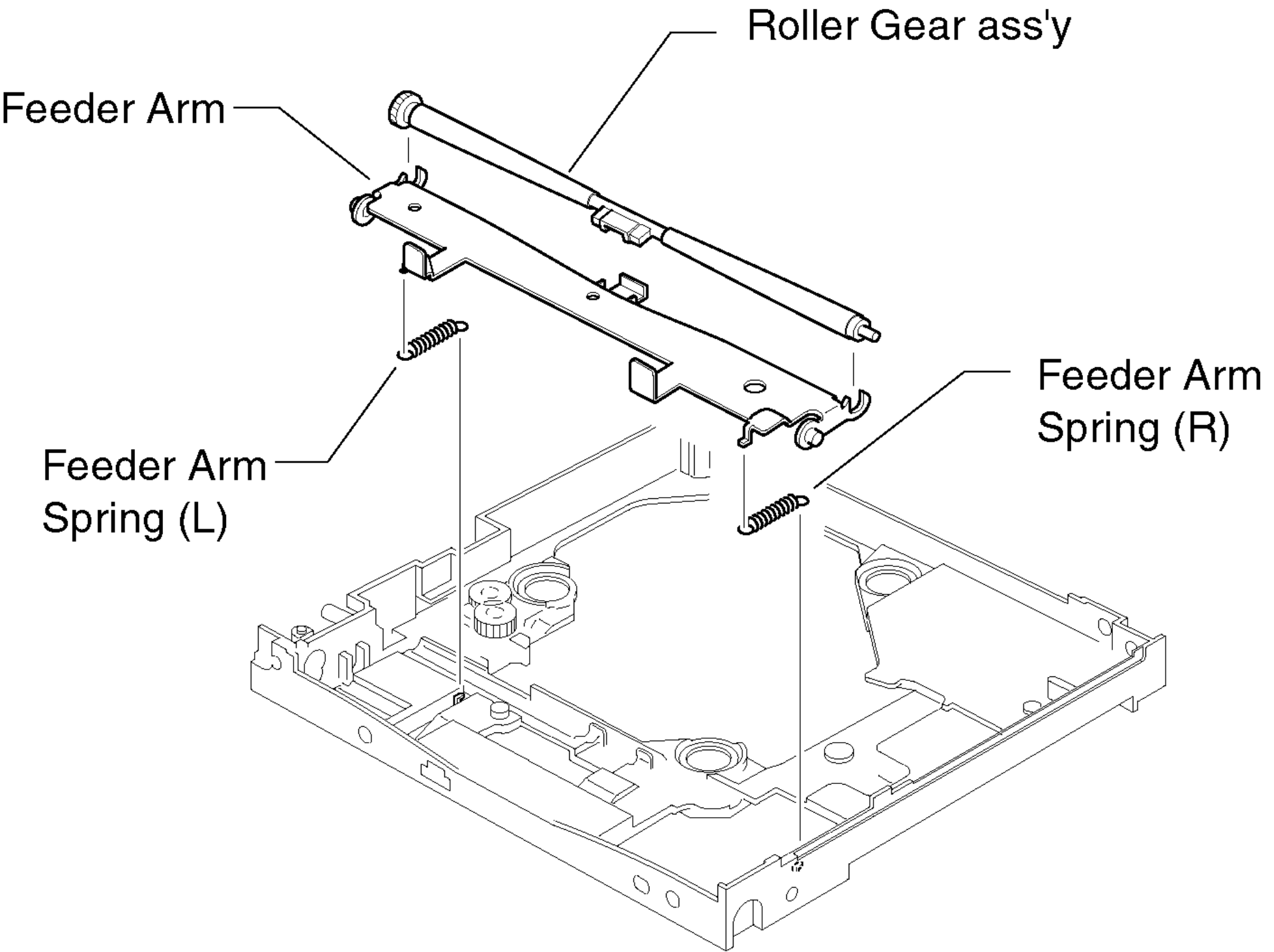
Roller Gear ass'y
Feeder Arm
Feeder Arm Spring (R)
Feeder Arm Spring (L)

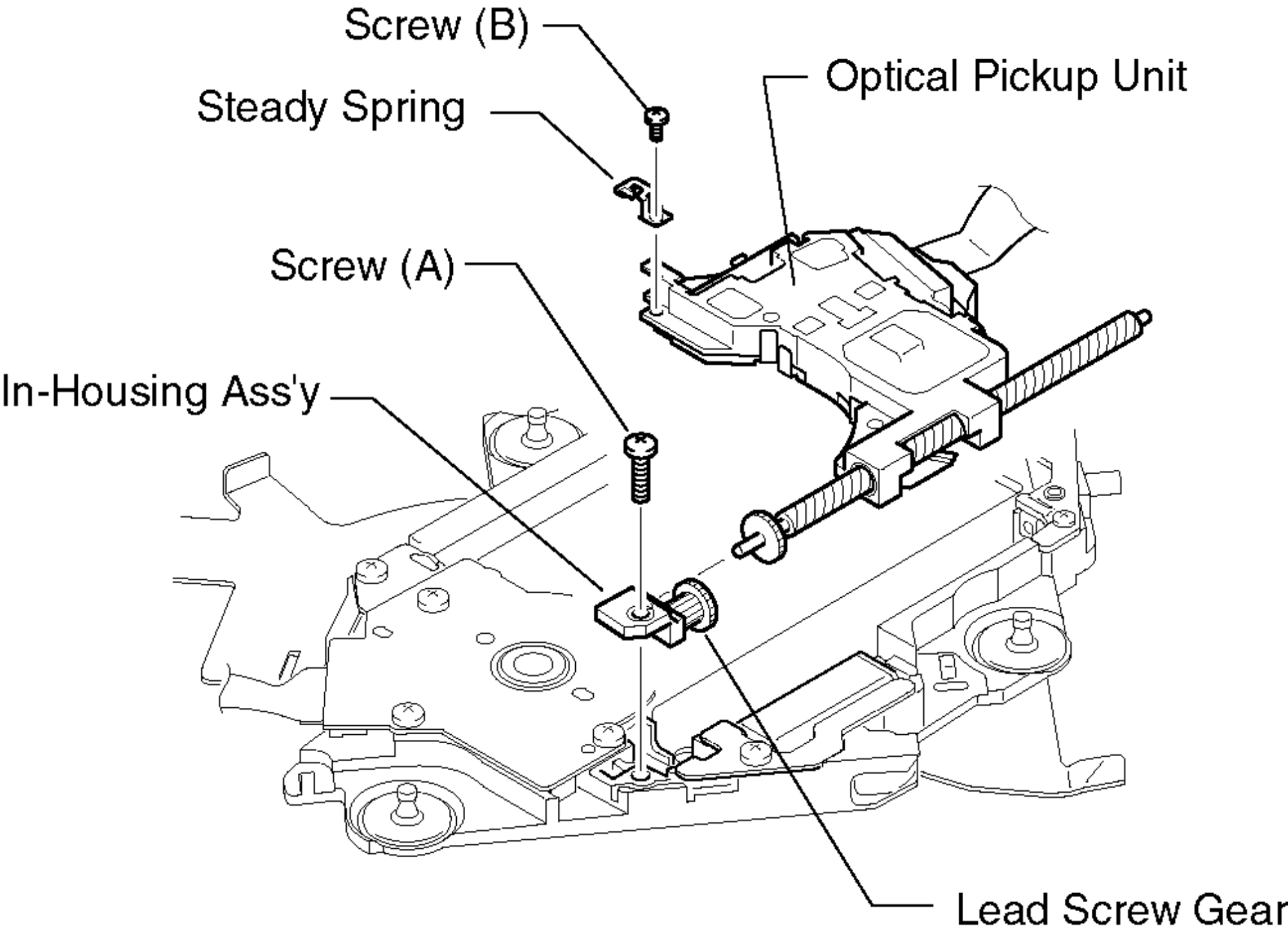
Screw (B)
Optical Pickup Unit
Steady Spring
Screw (A)
In-Housing Ass'y
Lead Screw Gear

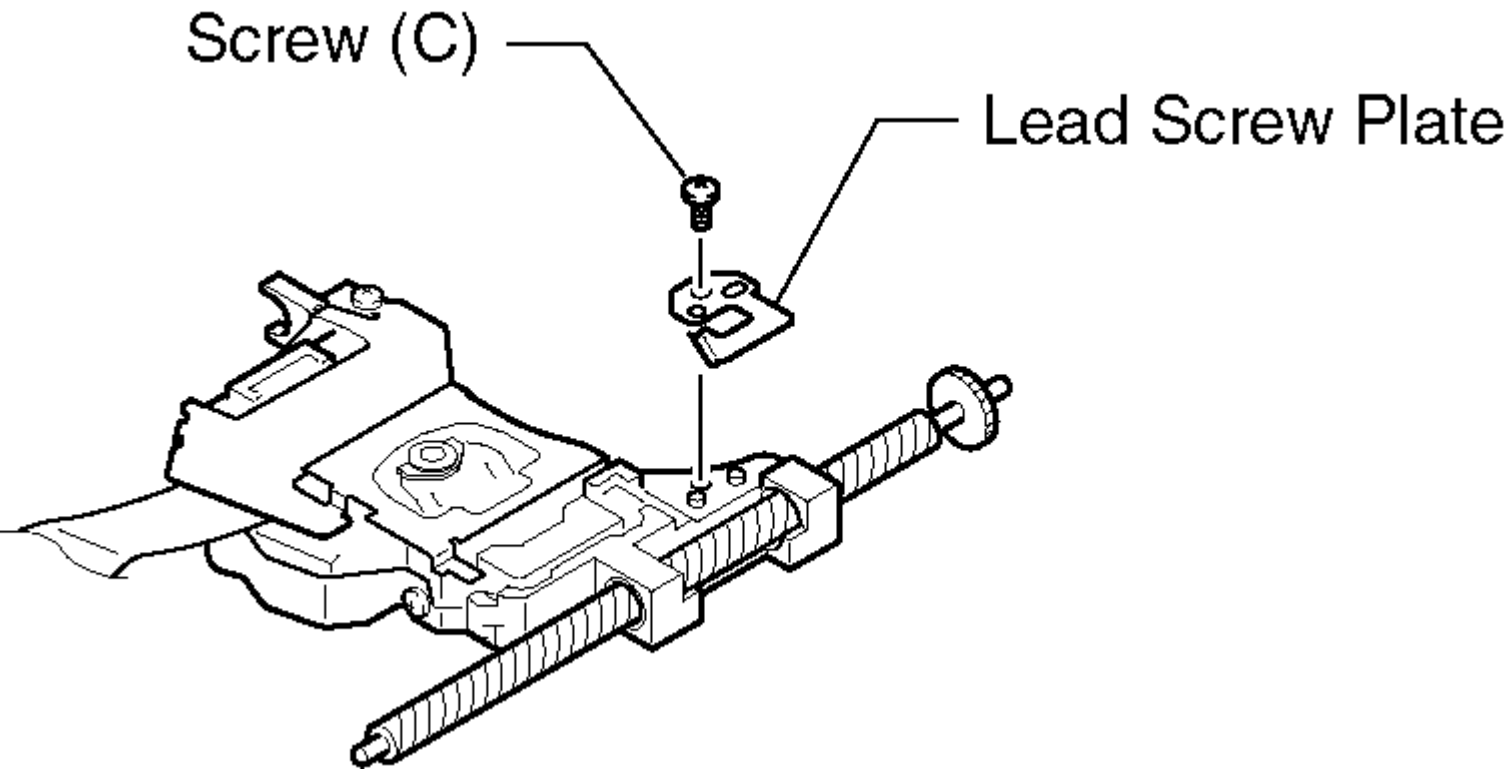
Screw (C)
Lead Screw Plate

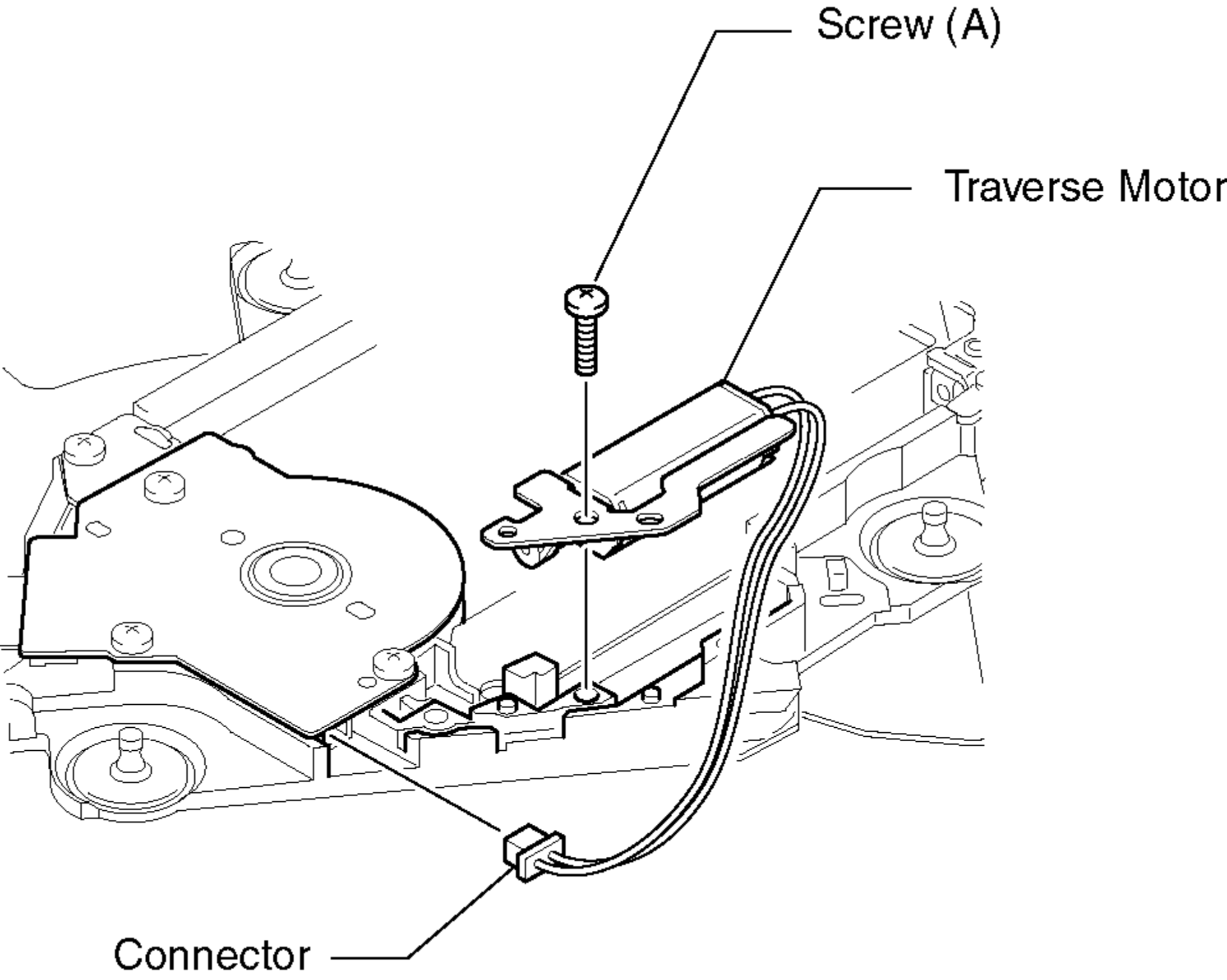
Screw (A)
Traverse Motor
Connector

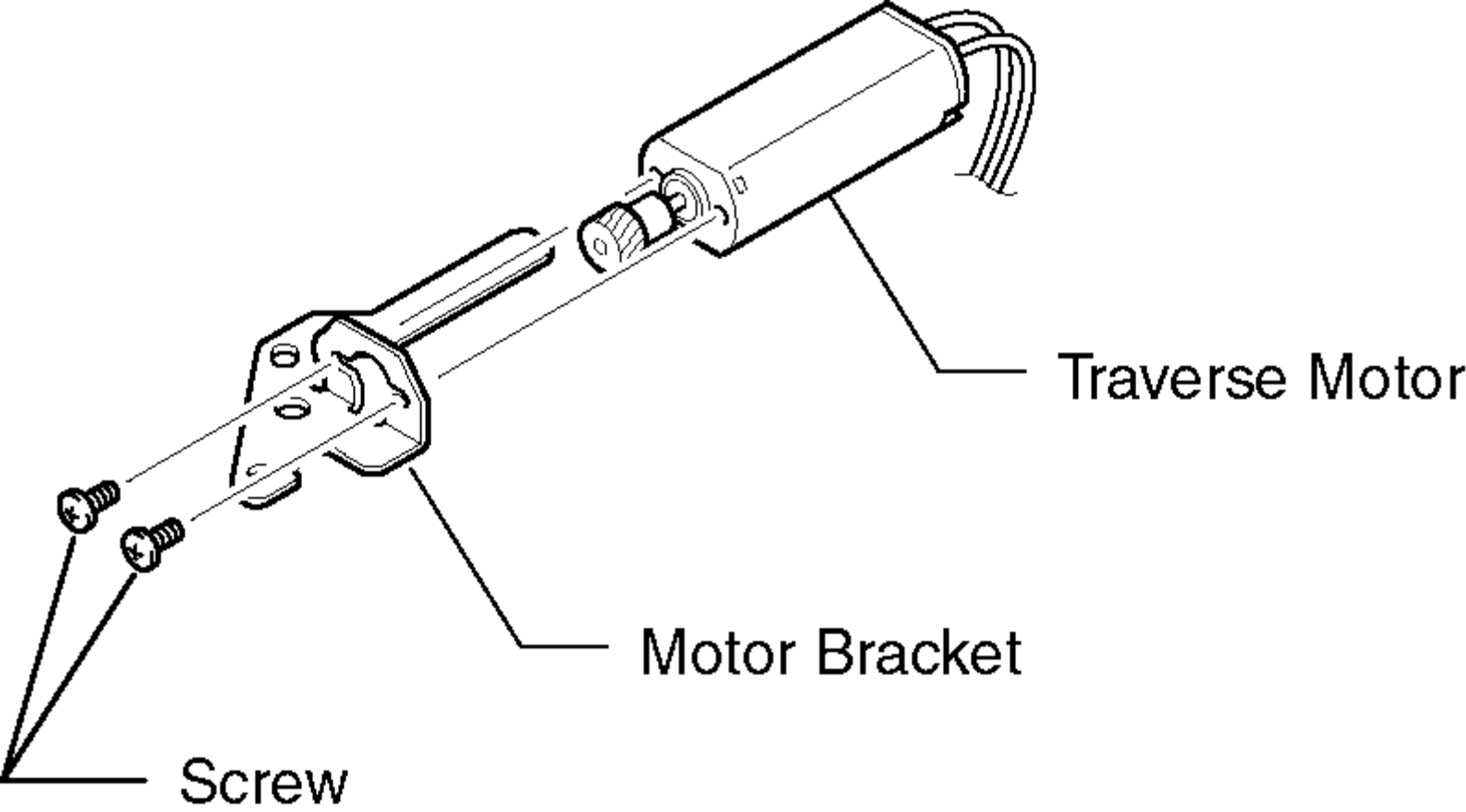
Traverse Motor
Motor Bracket
Screw

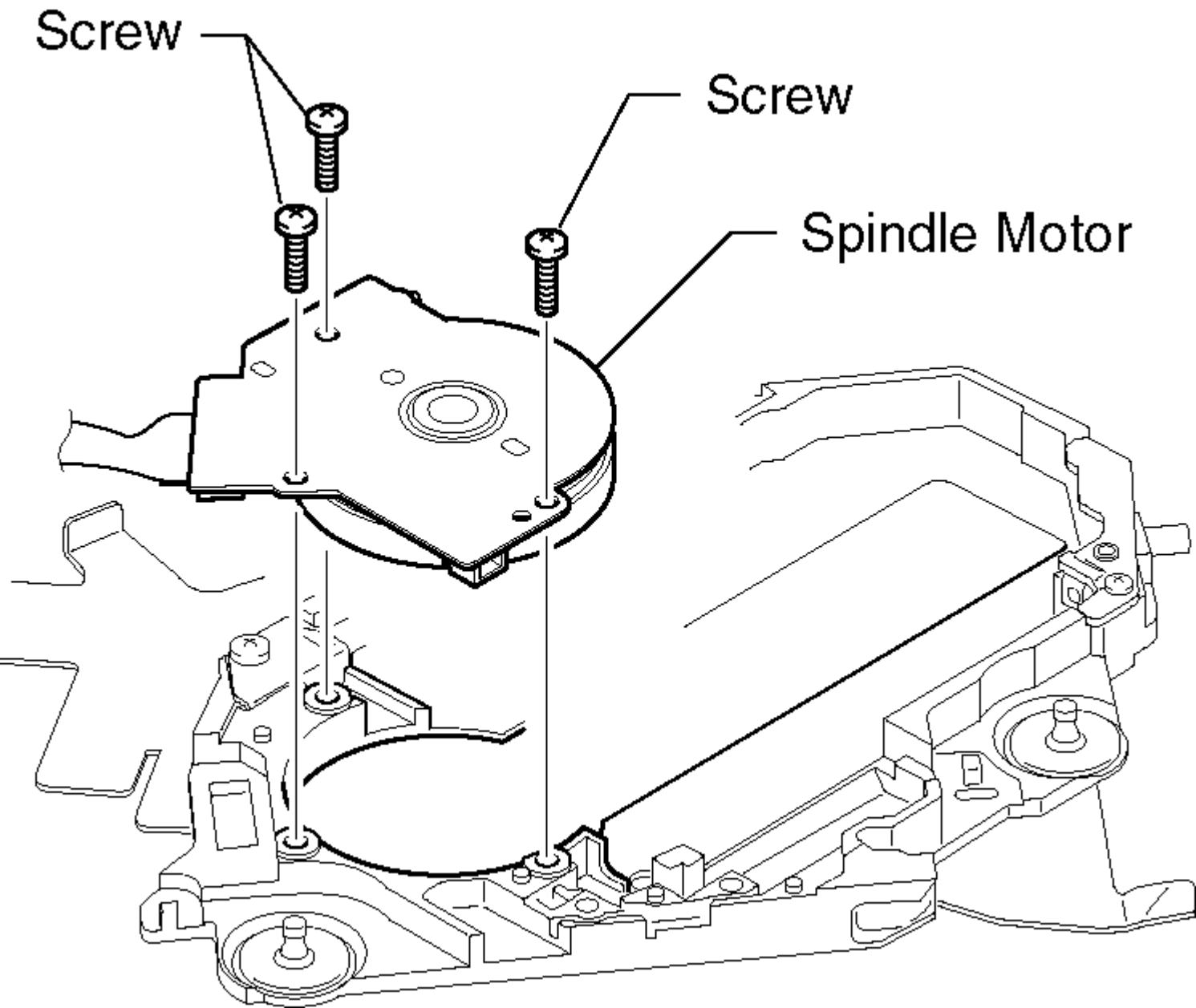
Screw
Screw
Spindle Motor

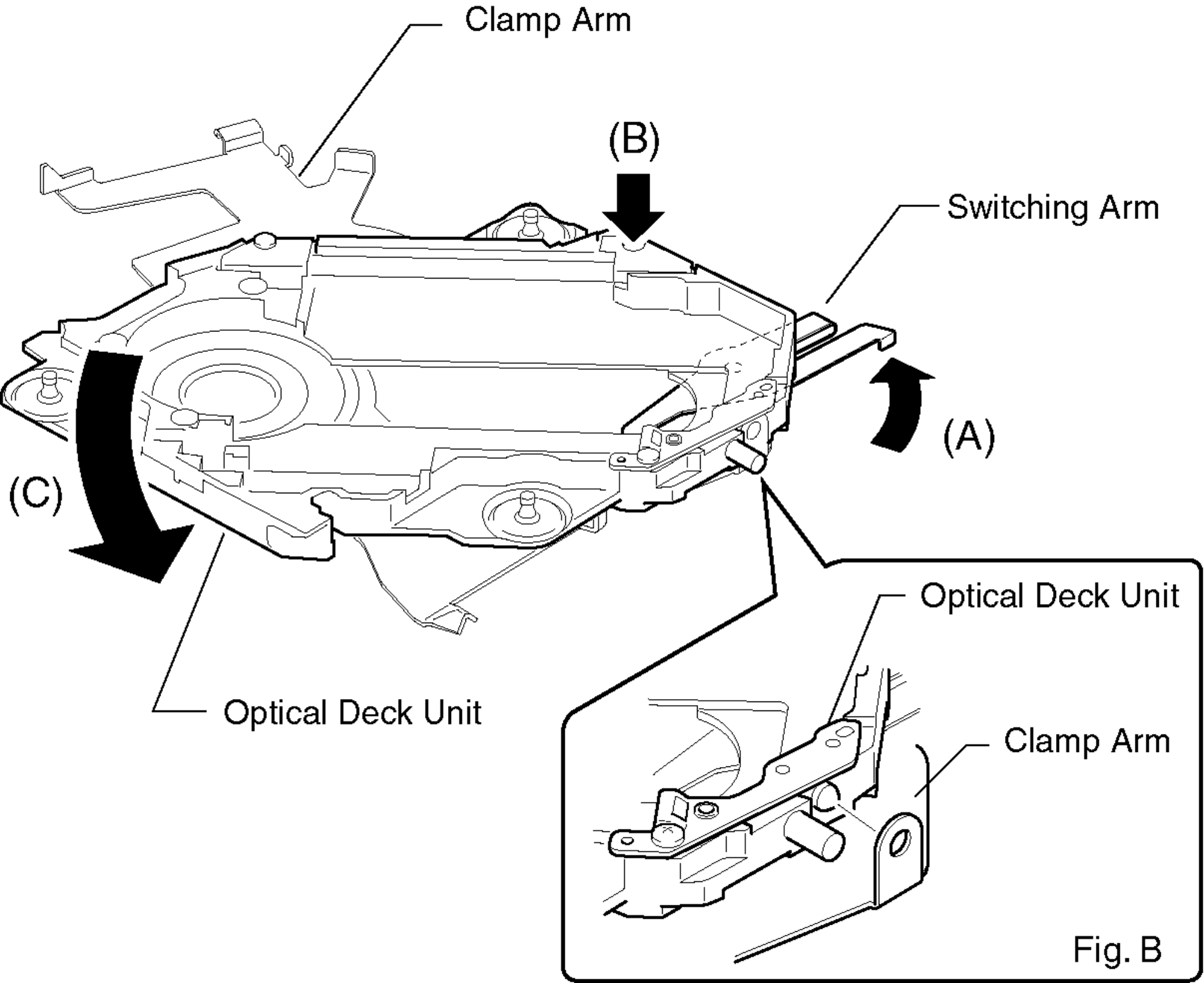
Clamp Arm
(B)
Switching Arm
(A)
(C)
Optical Deck Unit
Optical Deck Unit
Clamp Arm
Fig. B

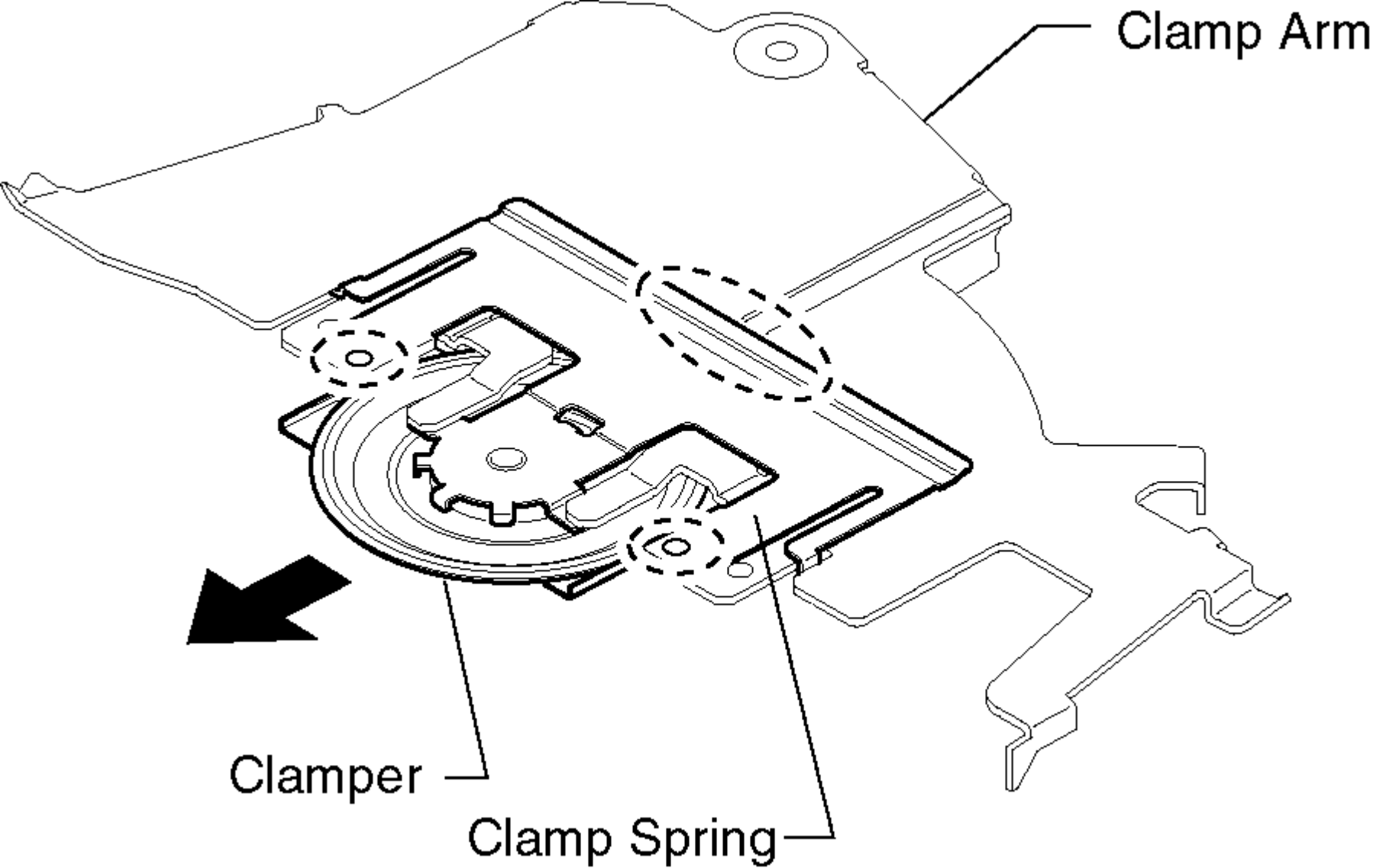
Clamp Arm
Clamper
Clamp Spring

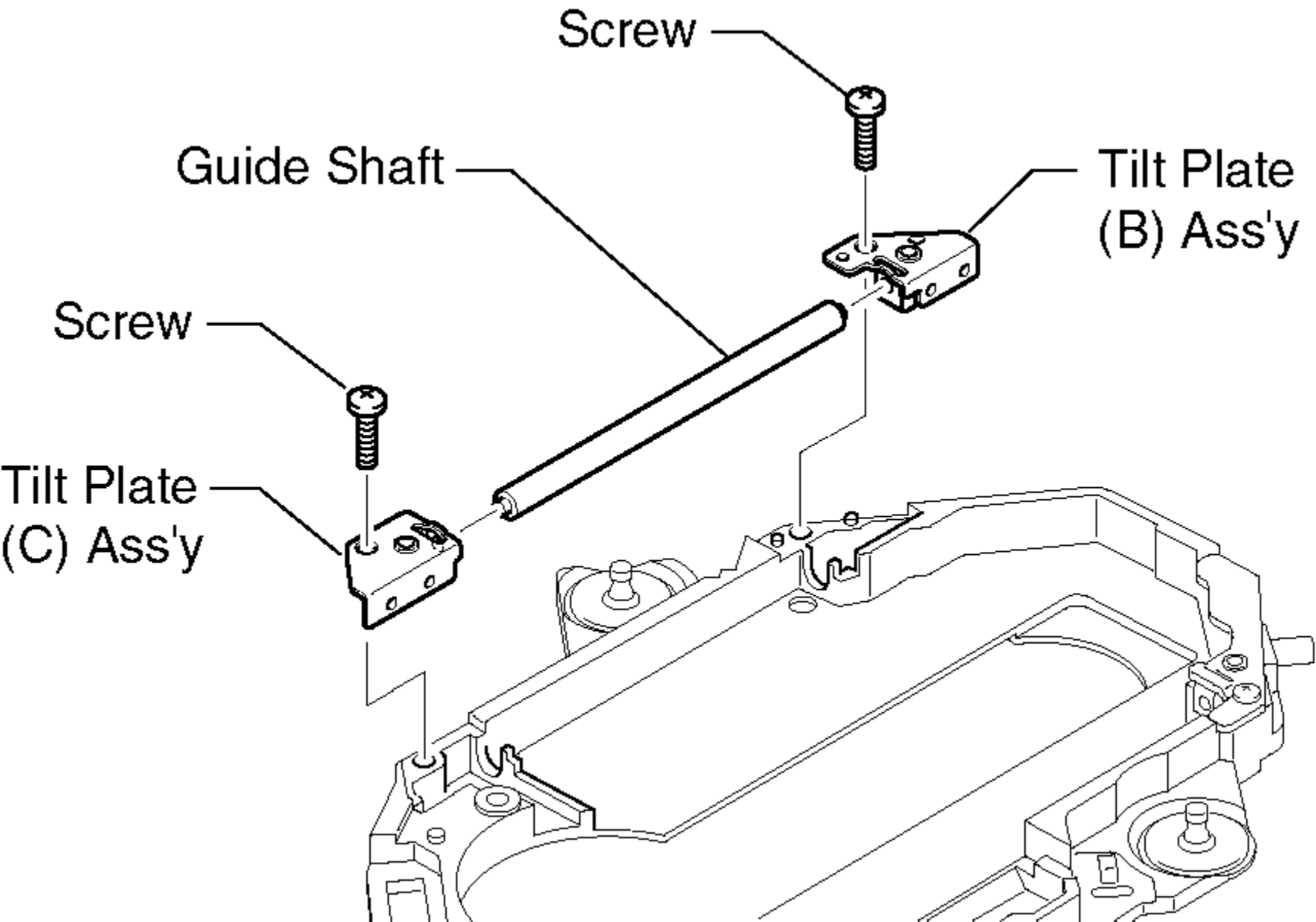
Screw
Guide Shaft
Tilt Plate
(B) Ass'y
Screw
Tilt Plate
(C) Ass'y

CAUTION:

This product utilizes a laser diode with the unit turned "on", laser radiation is emitted from the pickup lens.

Laser radiation from the pickup lens is safety level, but be sure the followings:

1. Do not disassemble the optical pickup unit, since radiation from exposed laser diode is dangerous.
2. Do not adjust the variable resistor on the pickup unit. It was already adjusted.
3. Do not look at the focus lens using optical instruments.
4. Recommend not to look at pickup lens for a long time.

Caution

This Product utilizes a laser.
Use of controls or adjustments or performance of procedures other than those specified herein may result in hazardous radiation exposure.

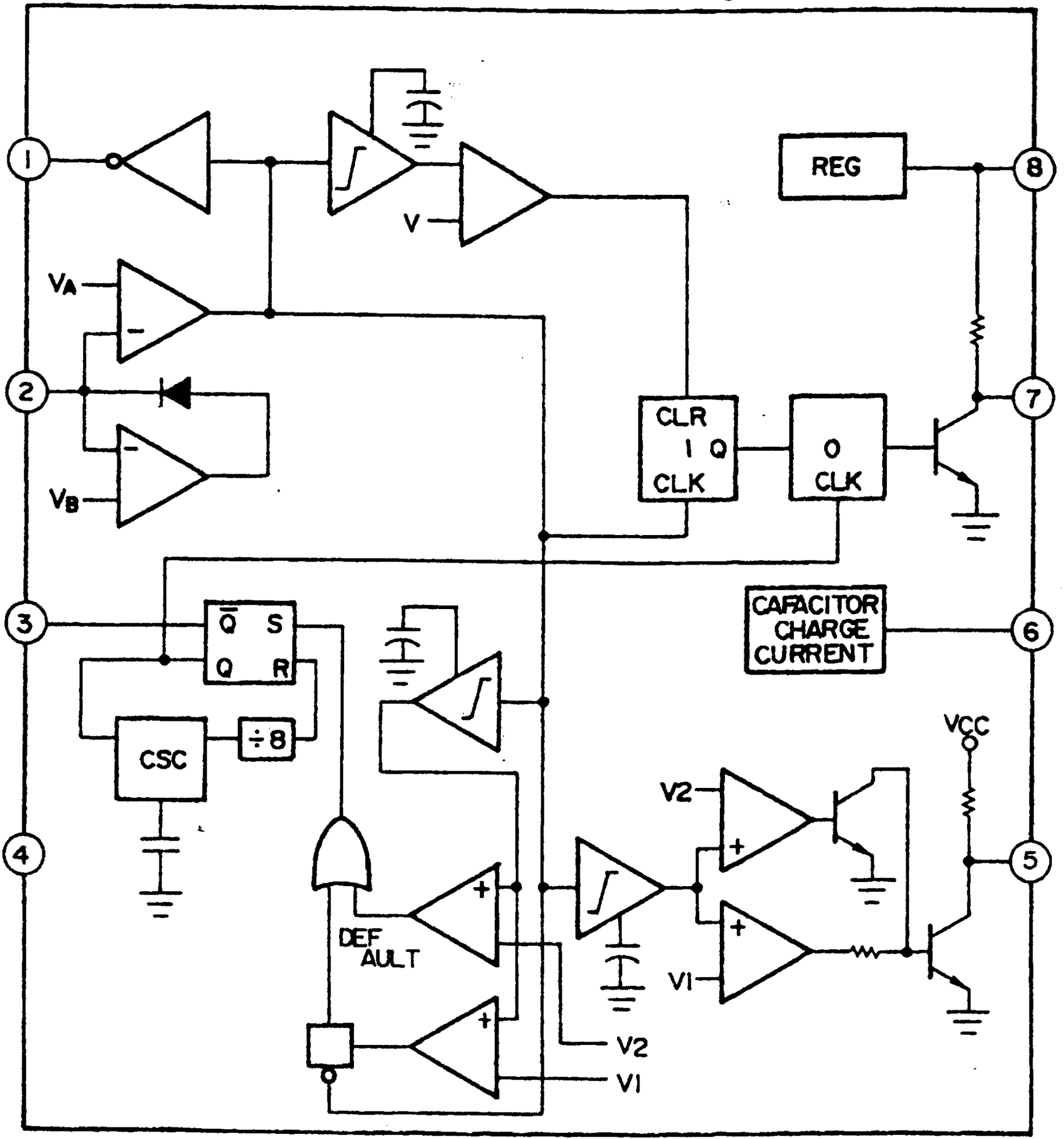
1
2
3
4
5
6
7
8
REG
V
VA
VB
CLR
I Q
CLK
O
CLK
CAPACITOR
CHARGE
CURRENT
Q̄ S
Q R
CSC
÷8
DEF
AULT
V2
V1
VCC

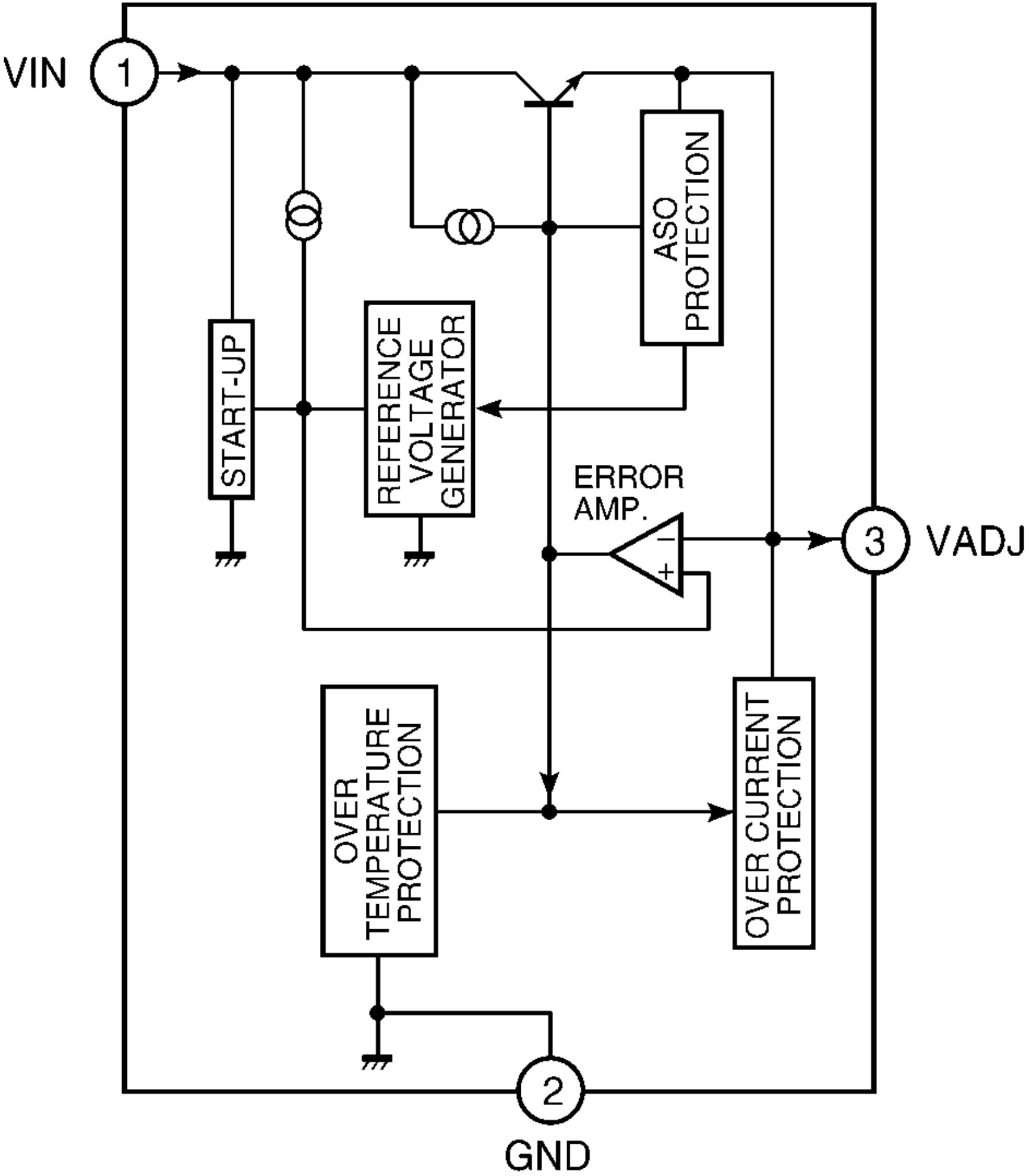
VIN
1
START-UP
REFERENCE VOLTAGE GENERATOR
ASO PROTECTION
ERROR AMP.
3
VADJ
OVER TEMPERATURE PROTECTION
OVER CURRENT PROTECTION
2
GND

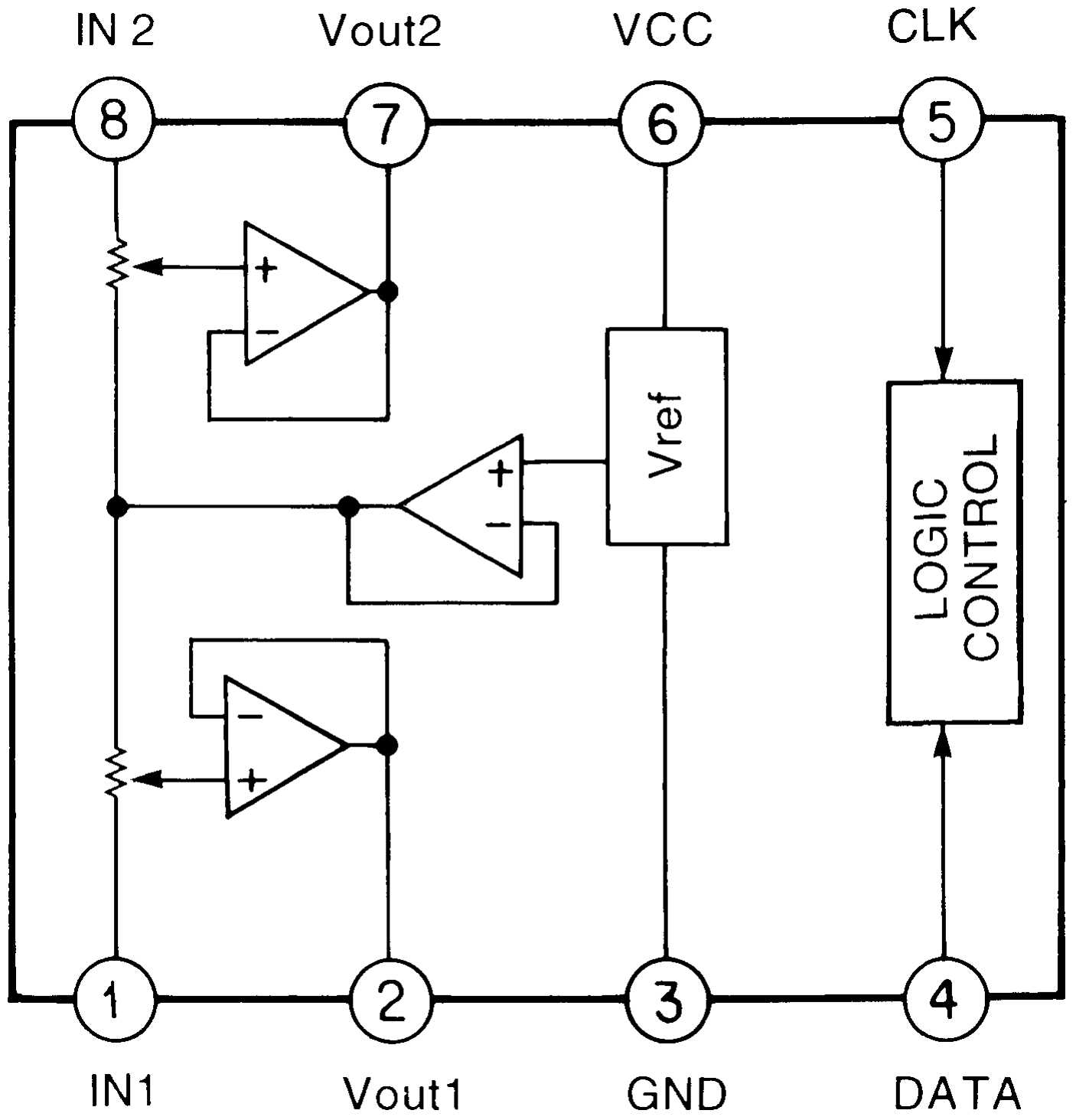
IN 2
Vout2
VCC
CLK
8
7
6
5
Vref
LOGIC CONTROL
1
2
3
4
IN1
Vout1
GND
DATA

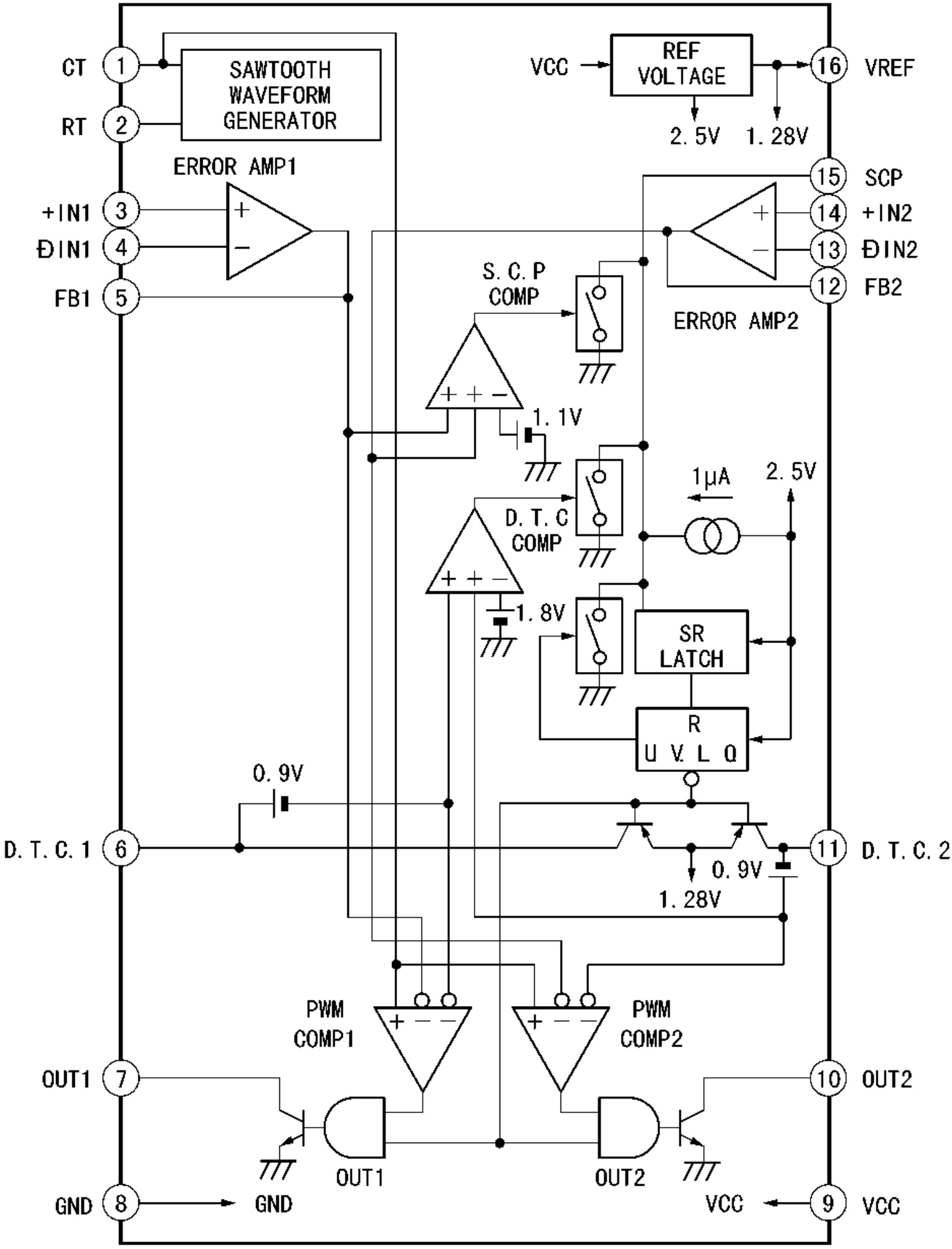
CT
RT
SAWTOOTH WAVEFORM GENERATOR
VCC
REF VOLTAGE
VREF
2. 5V
1. 28V
ERROR AMP1
+IN1
ÐIN1
FB1
SCP
+IN2
ÐIN2
FB2
ERROR AMP2
S. C. P COMP
1. 1V
1μA
2. 5V
D. T. C COMP
1. 8V
SR LATCH
R
U V. L O
0. 9V
D. T. C. 1
D. T. C. 2
0. 9V
1. 28V
PWM COMP1
PWM COMP2
OUT1
OUT2
OUT1
OUT2
GND
GND
VCC
VCC

ModelPicture

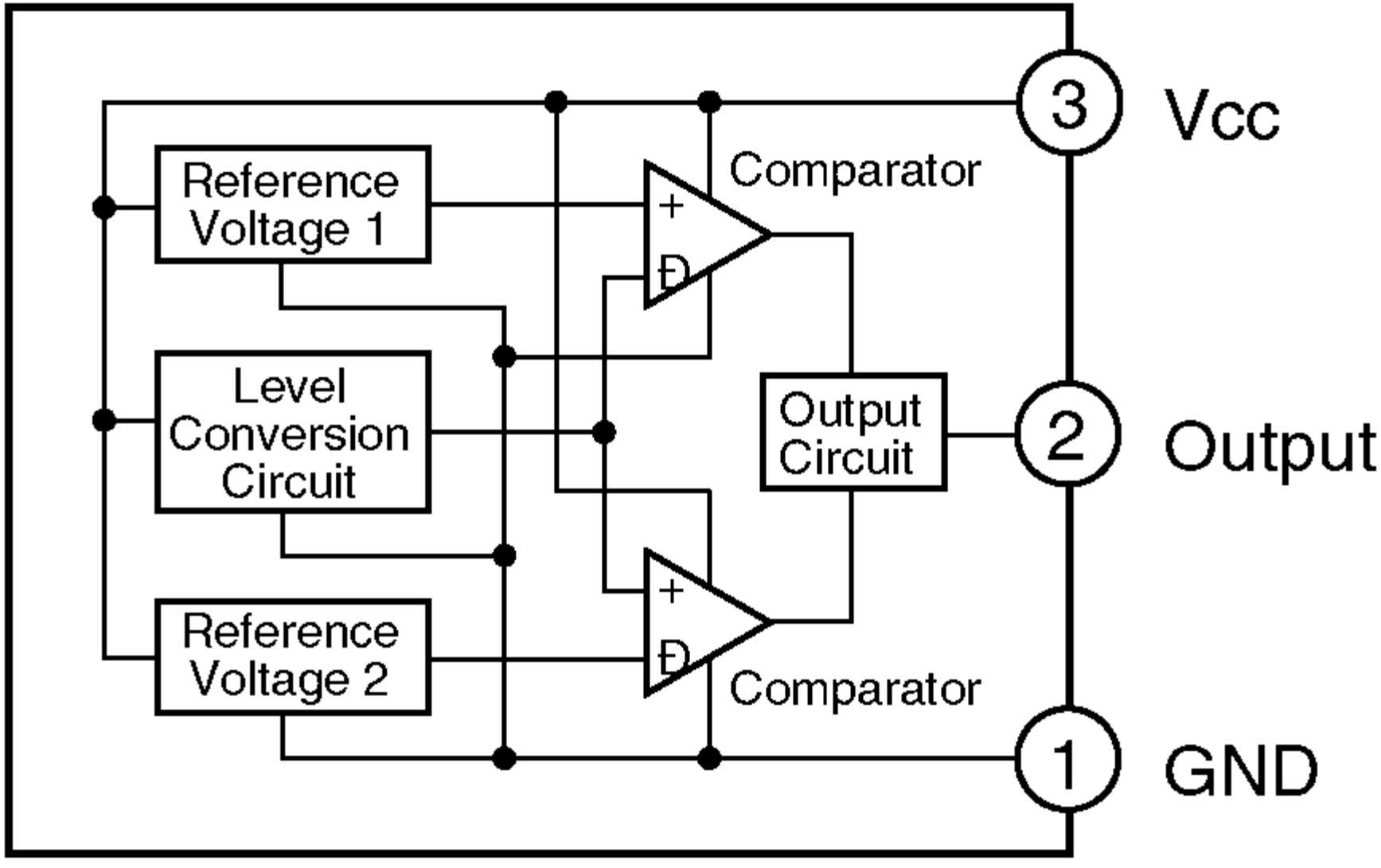
Reference Voltage 1
Level Conversion Circuit
Reference Voltage 2
Comparator
Comparator
Output Circuit
3
Vcc
2
Output
1
GND

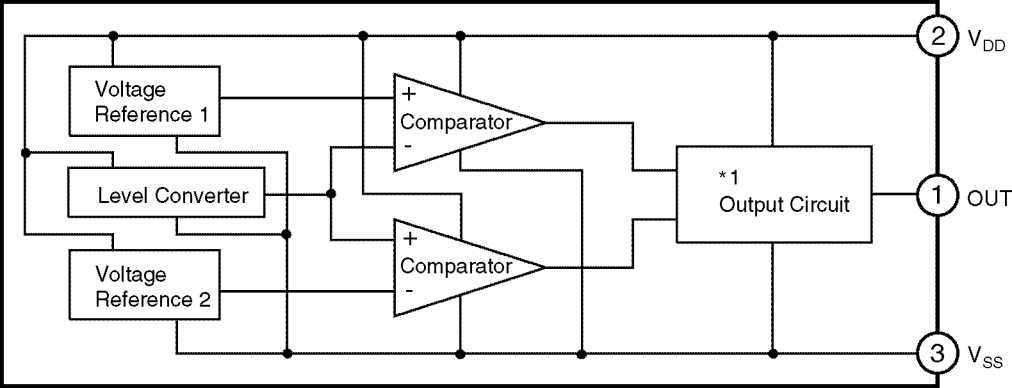
Voltage Reference 1
Level Converter
Voltage Reference 2
+
Comparator
-
+
Comparator
-
*1
Output Circuit
2
V_{DD}
1
OUT
3
V_{SS}

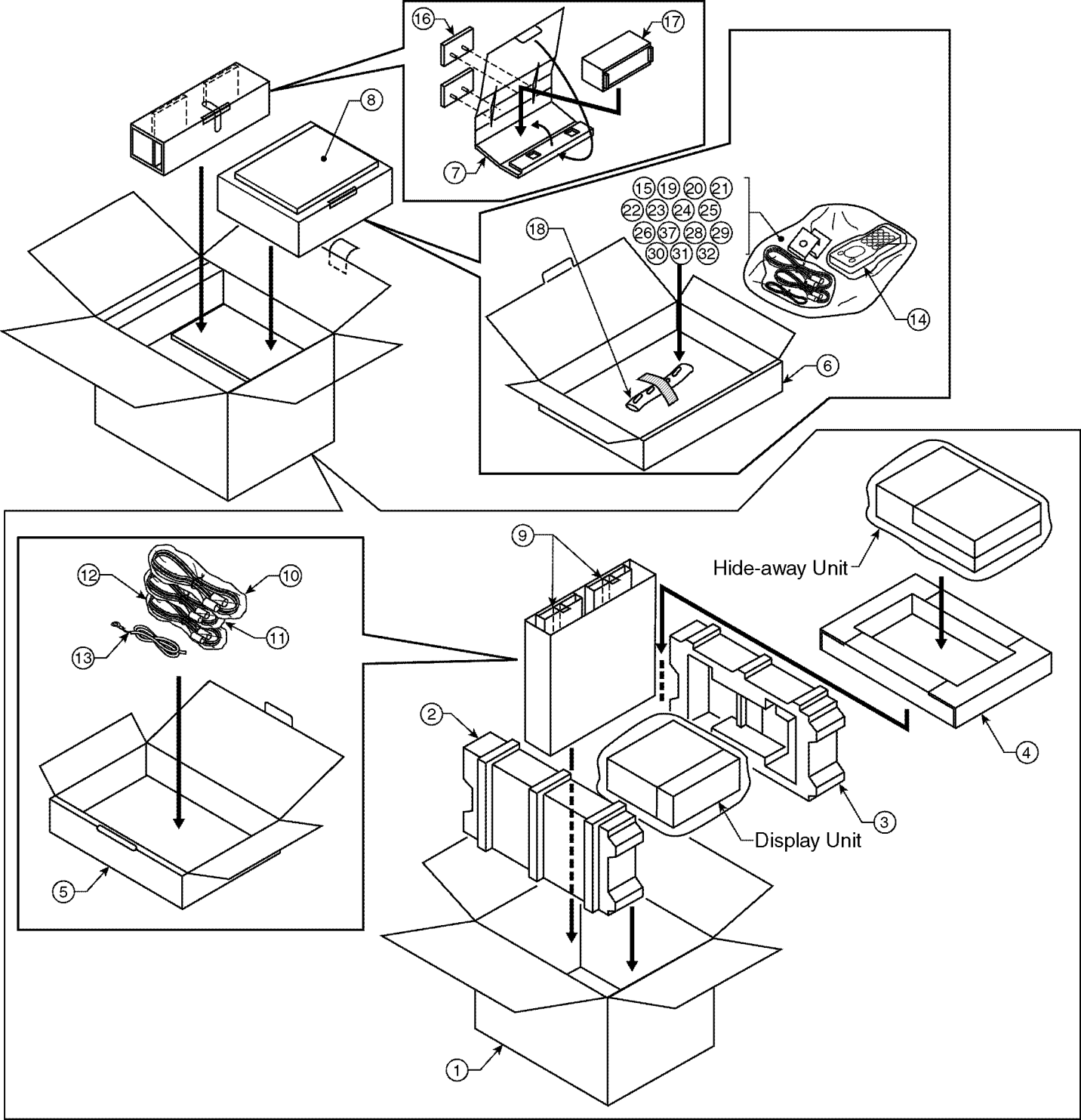
16
17
8
7
15 19 20 21
22 23 24 25
26 37 28 29
30 31 32
18
14
6
9
Hide-away Unit
12
10
11
13
2
4
3
Display Unit
5
1

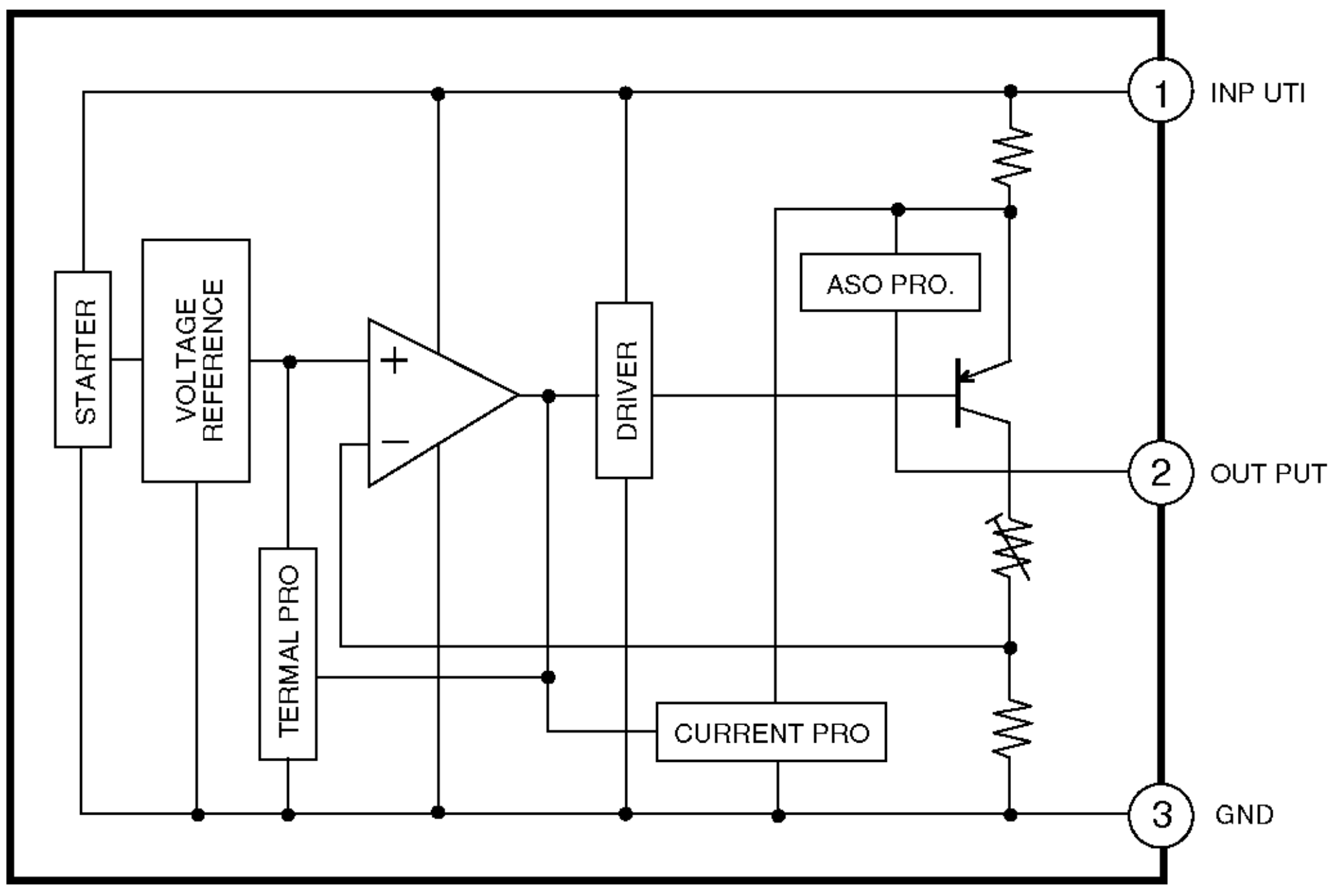
STARTER
VOLTAGE REFERENCE
TERMAL PRO
+
−
DRIVER
ASO PRO.
CURRENT PRO
1
INP UTI
2
OUT PUT
3
GND

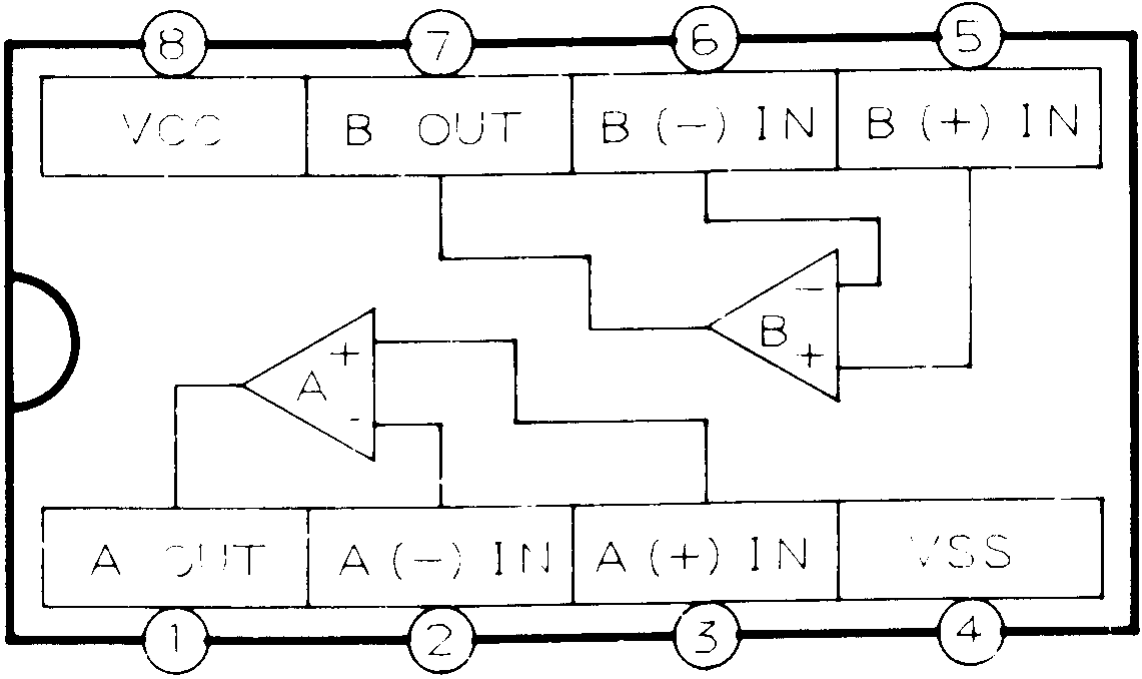
8
7
6
5
VCC
B OUT
B (−) IN
B (+) IN
B
A
A OUT
A (−) IN
A (+) IN
VSS
1
2
3
4

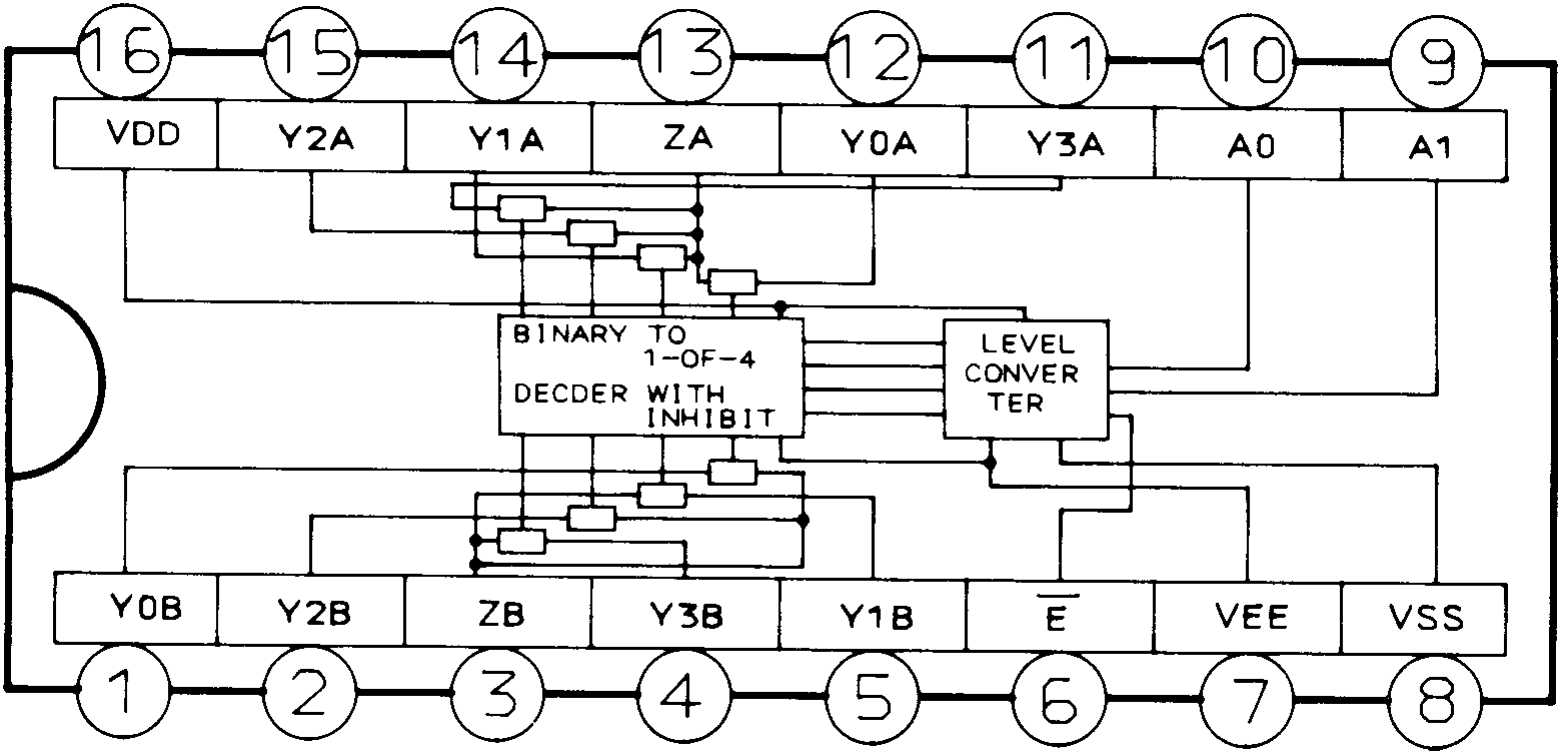
16
15
14
13
12
11
10
9
VDD
Y2A
Y1A
ZA
Y0A
Y3A
A0
A1
BINARY TO 1-OF-4 DECDER WITH INHIBIT
LEVEL CONVER TER
Y0B
Y2B
ZB
Y3B
Y1B
$\overline{E}$
VEE
VSS
1
2
3
4
5
6
7
8

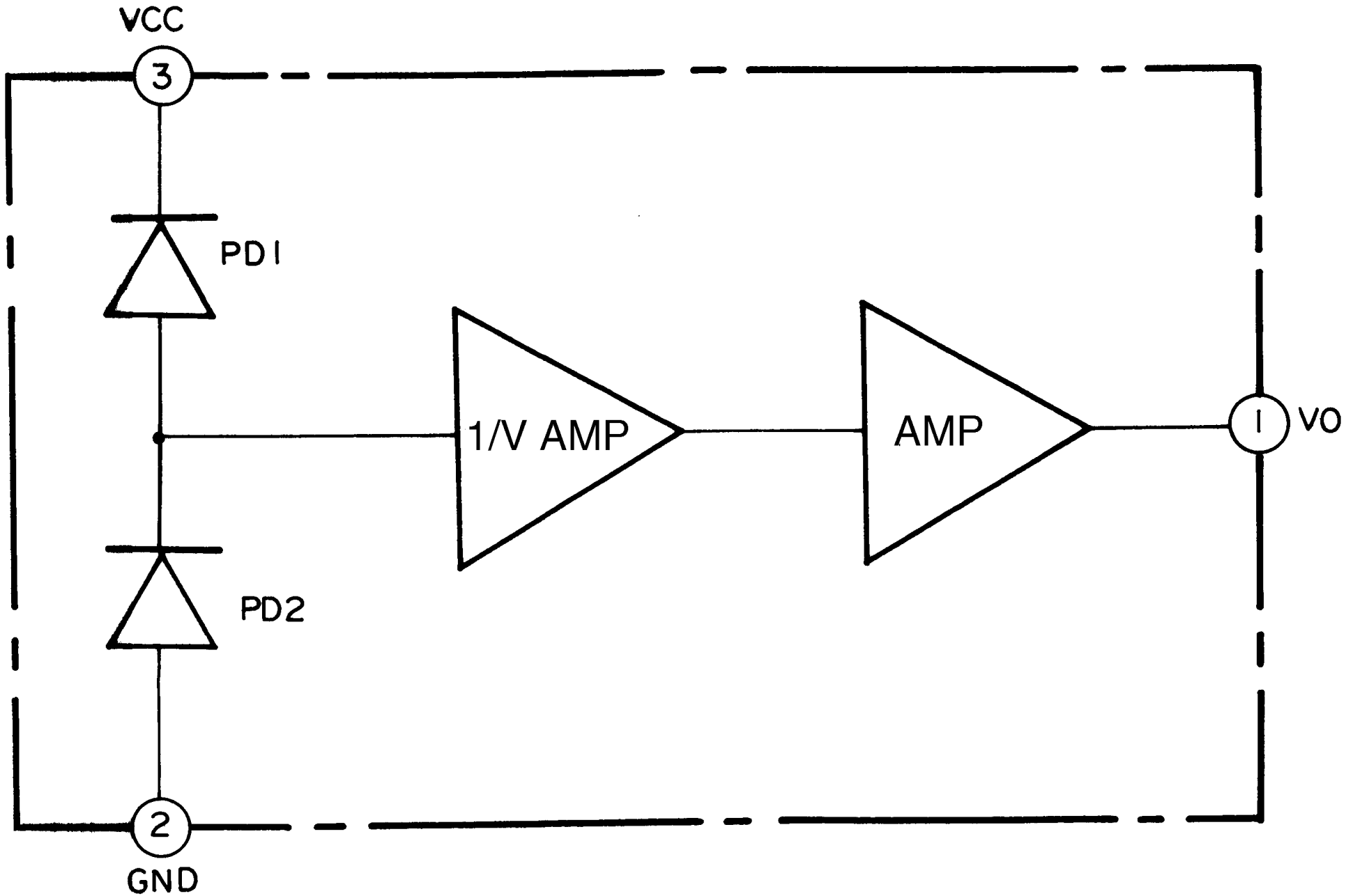
VCC
3
PD1
1/V AMP
AMP
1
VO
PD2
2
GND

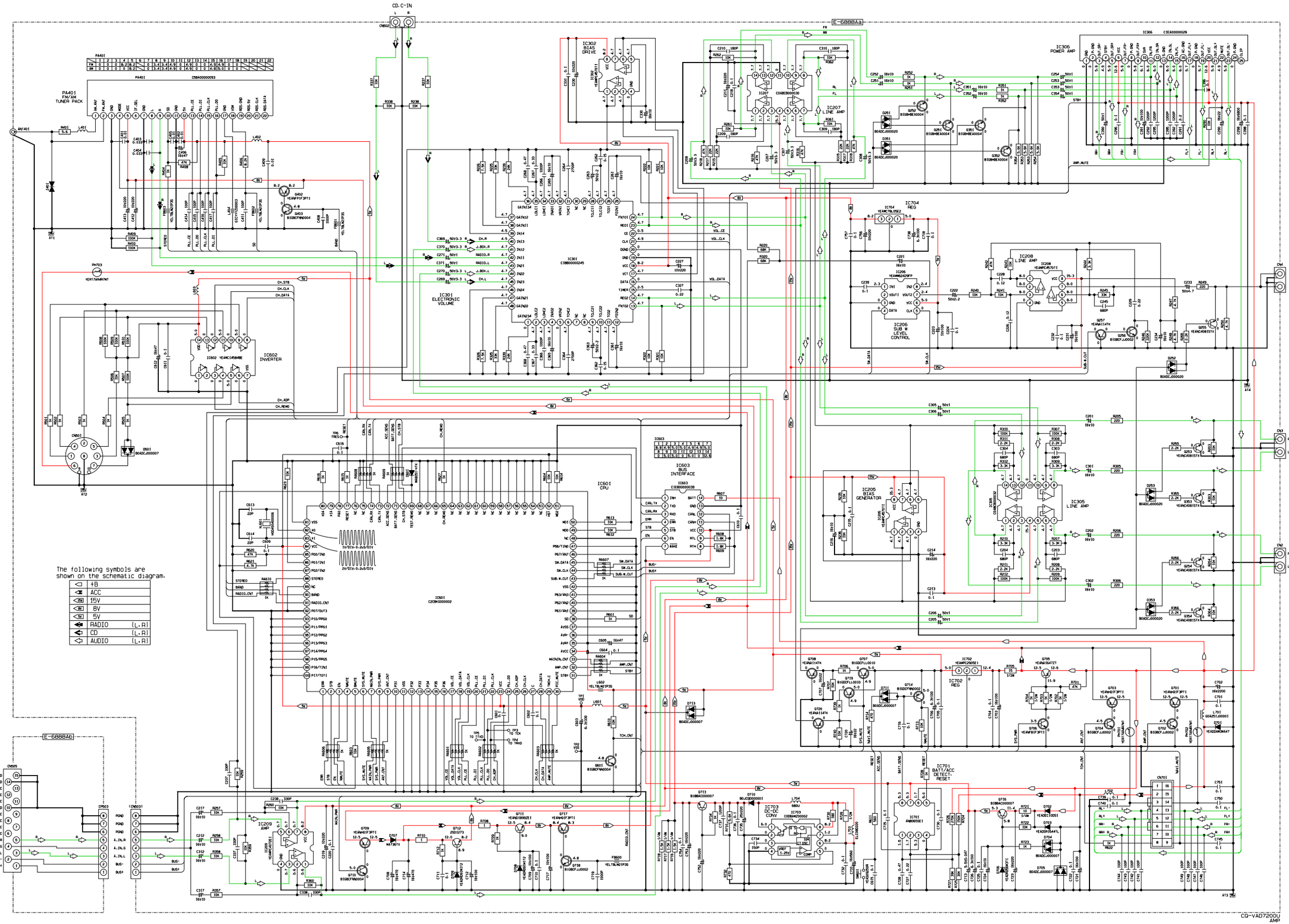

CQ-VAD7200U
AMP

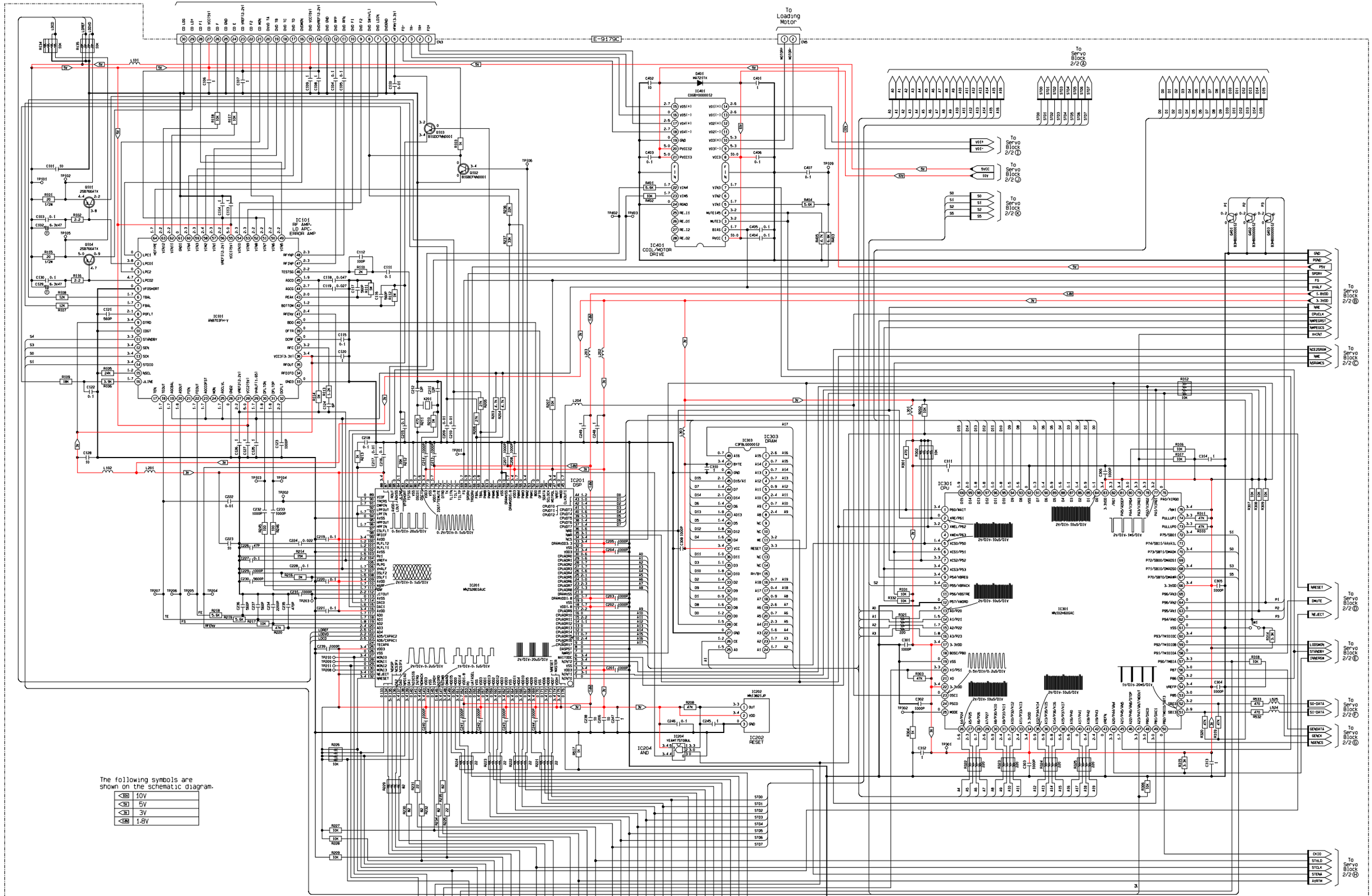

CQ-VAD7200U GFD19141 SERVO 1/2

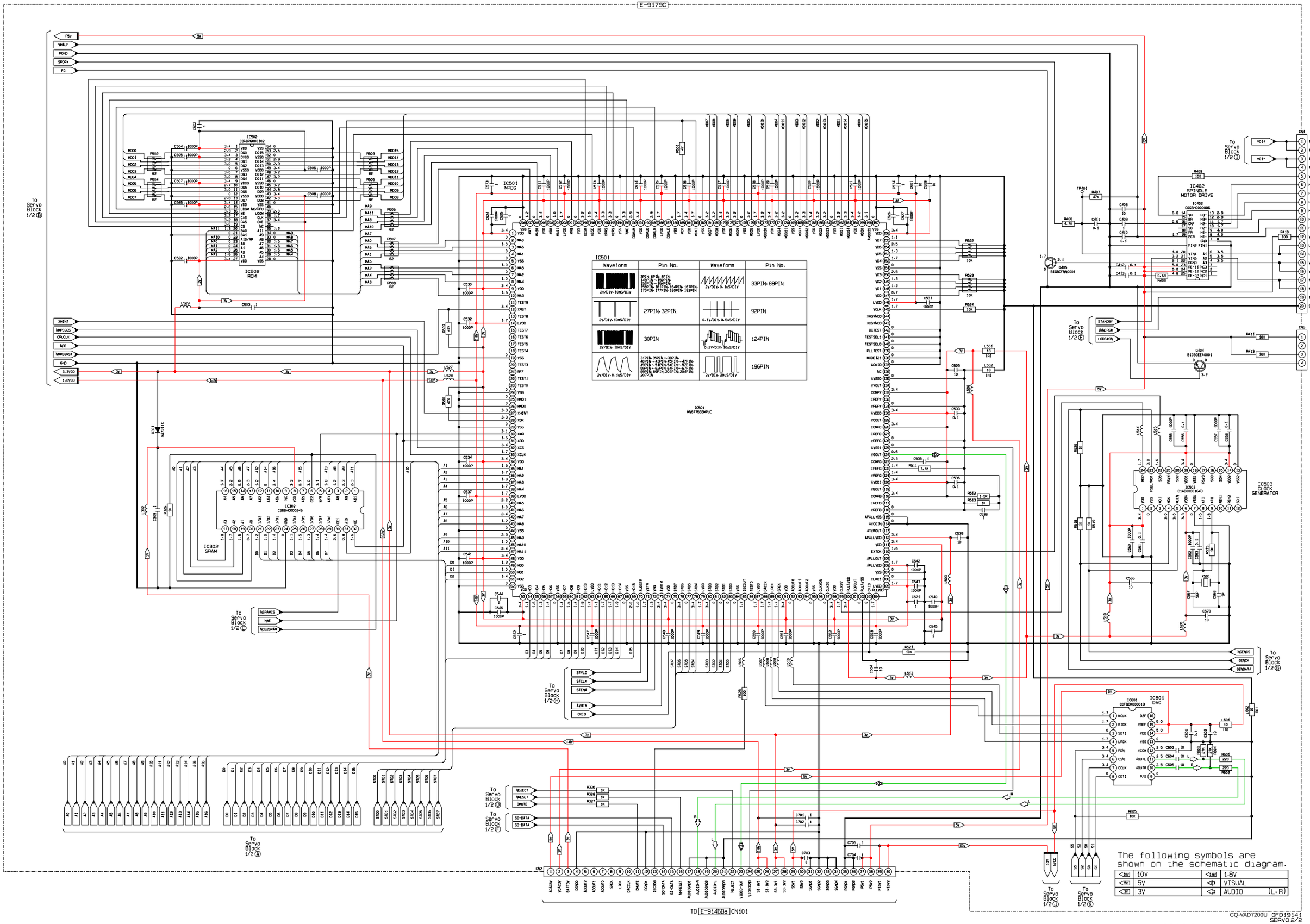
E-9179C
IC501 MPEG
IC502 ROM
IC302 SRAM
IC402 SPINDLE MOTOR DRIVE
IC503 CLOCK GENERATOR
IC601 DAC
To Servo Block 1/2
To Spindle/Traverse Motor Ass'y
To LED Ass'y
TO E-9146Ba CN101
The following symbols are shown on the schematic diagram.
10V
5V
3V
1.8V
VISUAL
AUDIO (L.R)
CQ-VAD7200U GFD19141
SERVO 2/2
Printed in Japan 2002.6 (K) (Recycled Paper)

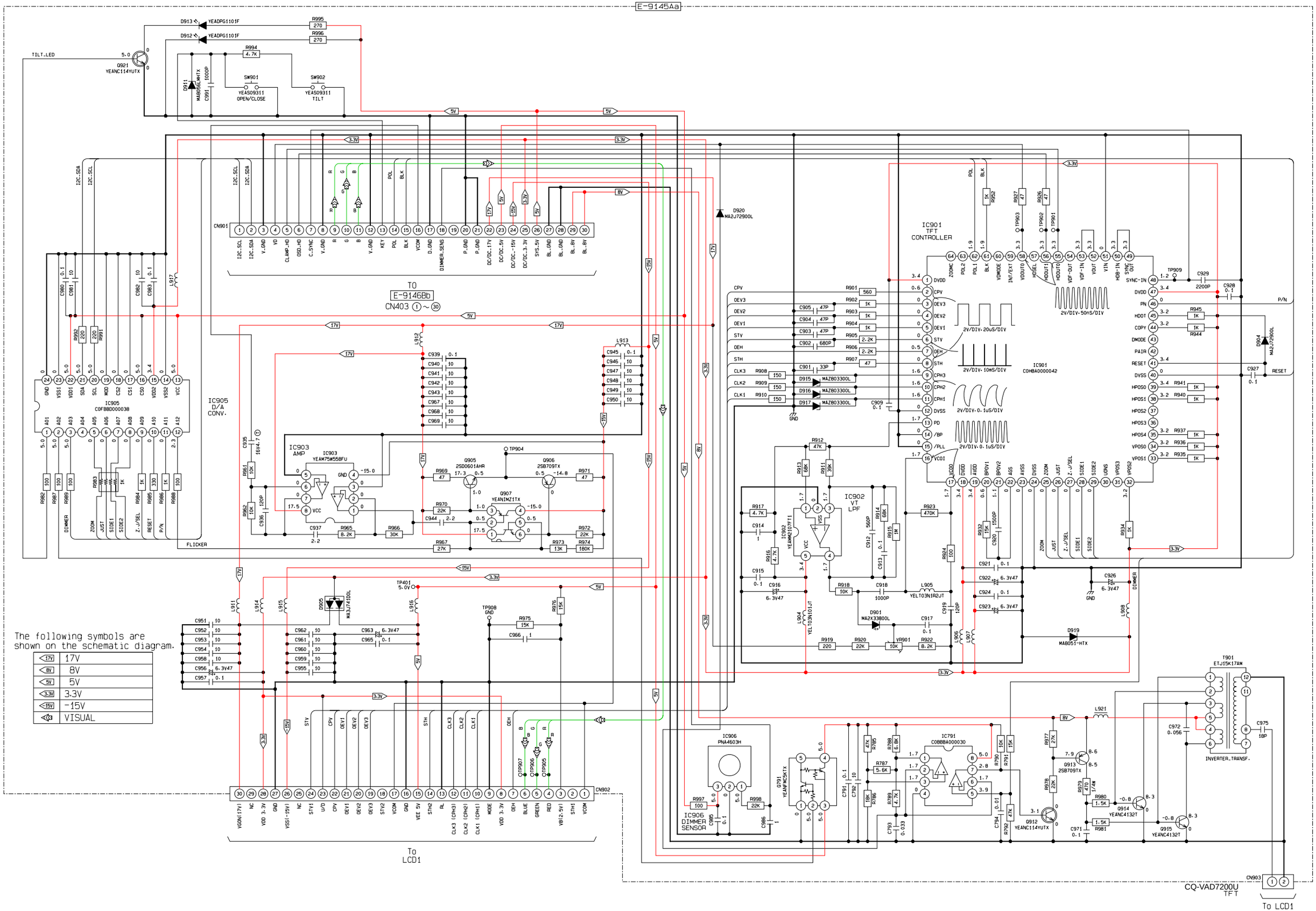

The following symbols are shown on the schematic diagram.

17V	17V
8V	8V
5V	5V
3.3V	3.3V
-15V	-15V
	VISUAL

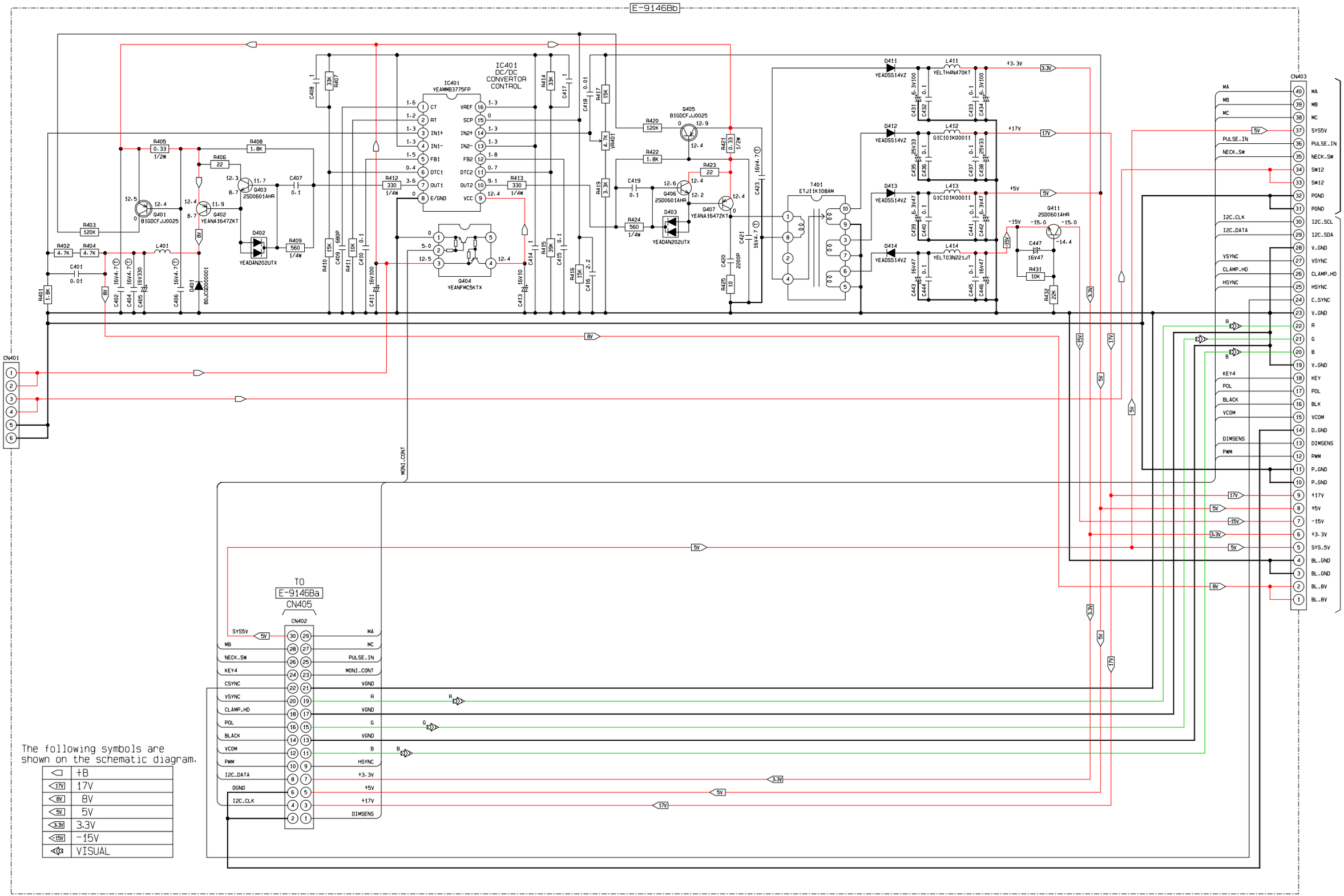

CQ-VAD7200U
SUB

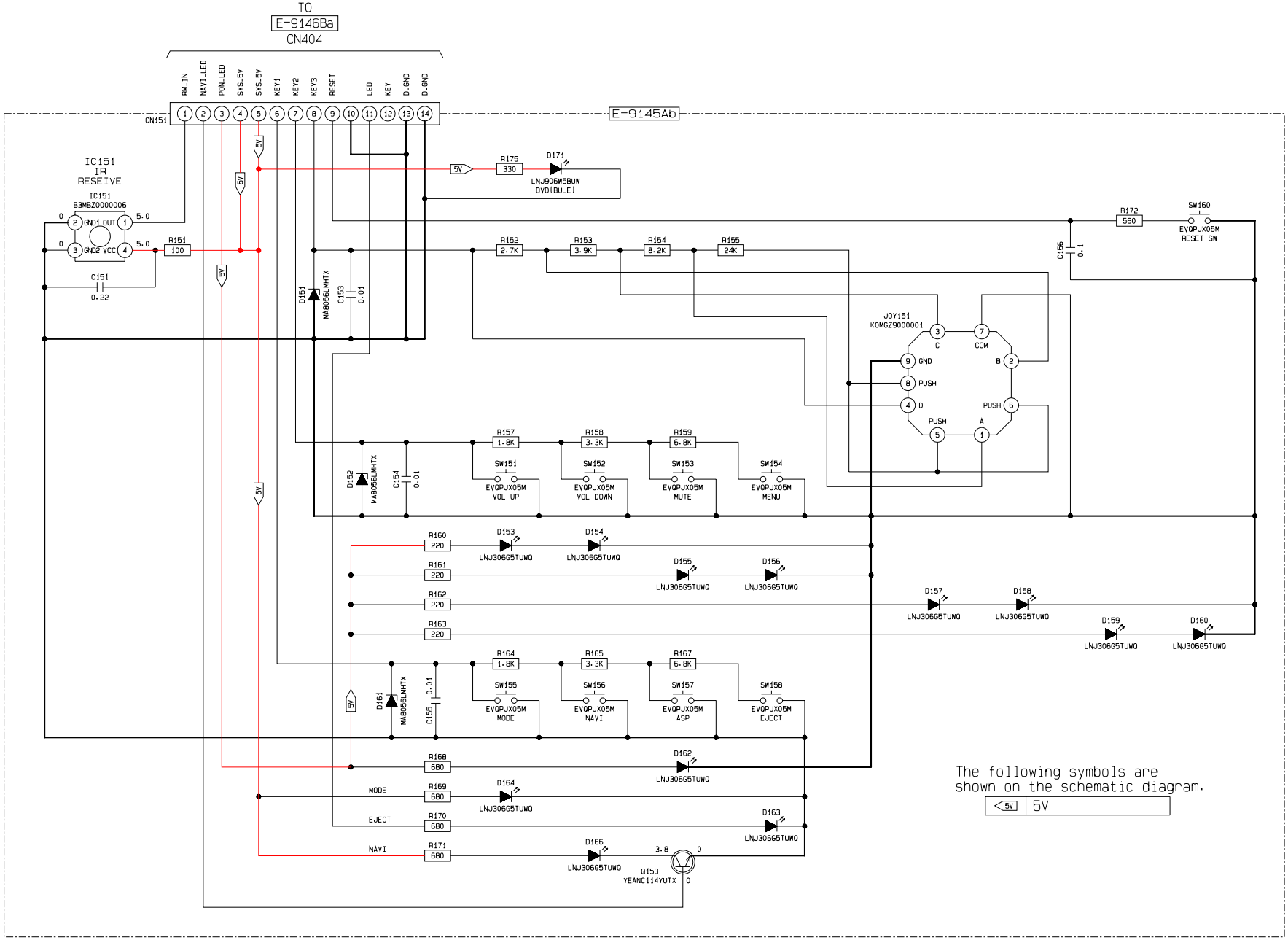
TO
E-9146Ba
CN404
RM_IN
NAVI_LED
PON_LED
SYS_5V
SYS_5V
KEY1
KEY2
KEY3
RESET
LED
KEY
D_GND
D_GND
CN151
E-9145Ab
IC151
IR
RESEIVE
IC151
B3MBZ0000006
GND1 OUT
GND2 VCC
R151
100
C151
0.22
R175
330
D171
LNJ906W5BUW
DVD(BULE)
R172
560
SW160
EVQPJX05M
RESET SW
C156
0.1
R152
2.7K
R153
3.9K
R154
8.2K
R155
24K
D151
MA8056LMHTX
C153
0.01
JOY151
KOMGZ9000001
C
COM
GND
B
PUSH
D
PUSH
PUSH
A
R157
1.8K
R158
3.3K
R159
6.8K
SW151
EVQPJX05M
VOL UP
SW152
EVQPJX05M
VOL DOWN
SW153
EVQPJX05M
MUTE
SW154
EVQPJX05M
MENU
D152
MA8056LMHTX
C154
0.01
R160
220
D153
LNJ306G5TUWQ
D154
LNJ306G5TUWQ
R161
220
D155
LNJ306G5TUWQ
D156
LNJ306G5TUWQ
R162
220
D157
LNJ306G5TUWQ
D158
LNJ306G5TUWQ
R163
220
D159
LNJ306G5TUWQ
D160
LNJ306G5TUWQ
R164
1.8K
R165
3.3K
R167
6.8K
SW155
EVQPJX05M
MODE
SW156
EVQPJX05M
NAVI
SW157
EVQPJX05M
ASP
SW158
EVQPJX05M
EJECT
D161
MA8056LMHTX
C155
0.01
R168
680
D162
LNJ306G5TUWQ
MODE
R169
680
D164
LNJ306G5TUWQ
EJECT
R170
680
D163
LNJ306G5TUWQ
NAVI
R171
680
D166
LNJ306G5TUWQ
3.8
Q153
YEANC114YUTX
The following symbols are
shown on the schematic diagram.
5V
5V

23.6. Amp/Joint Block

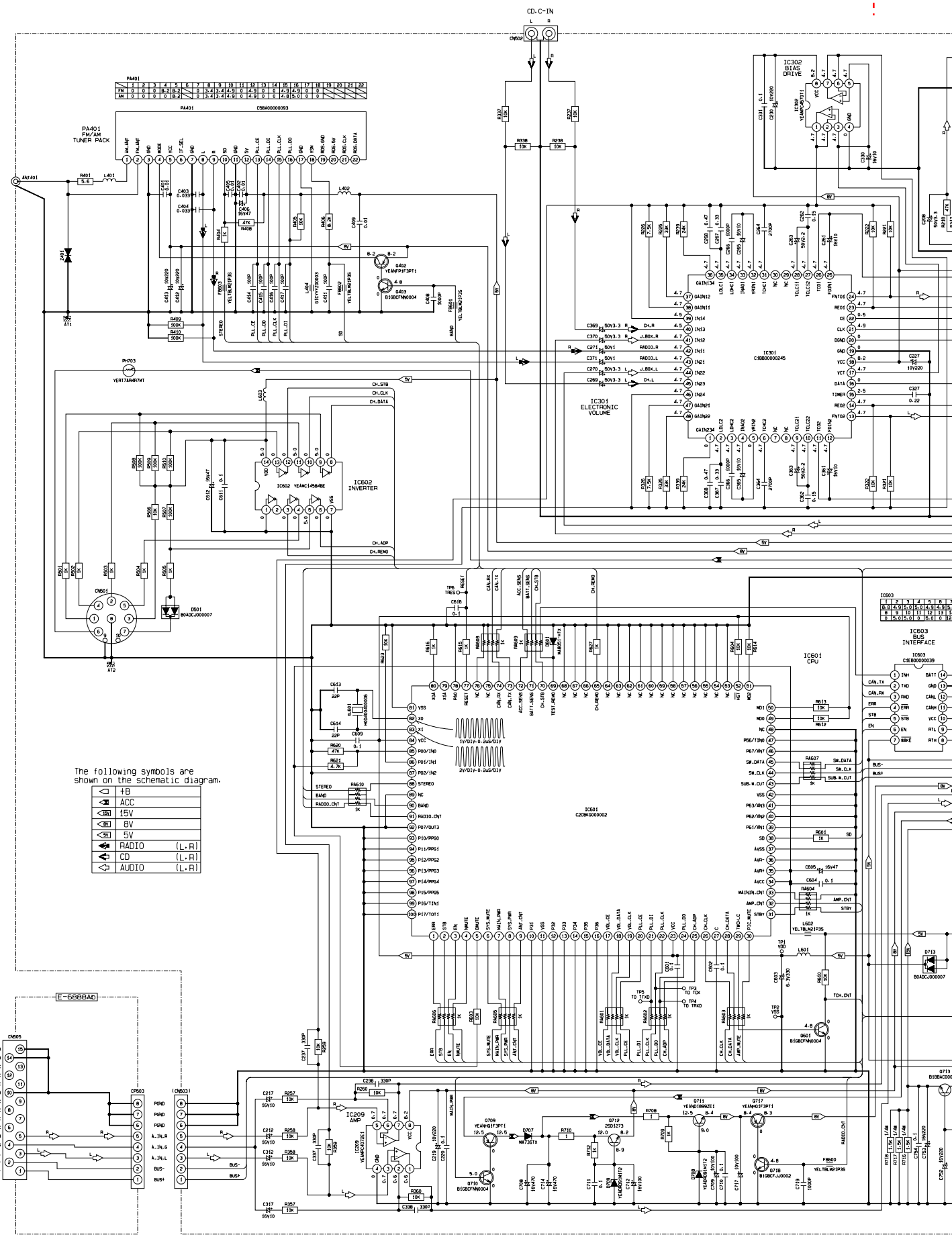

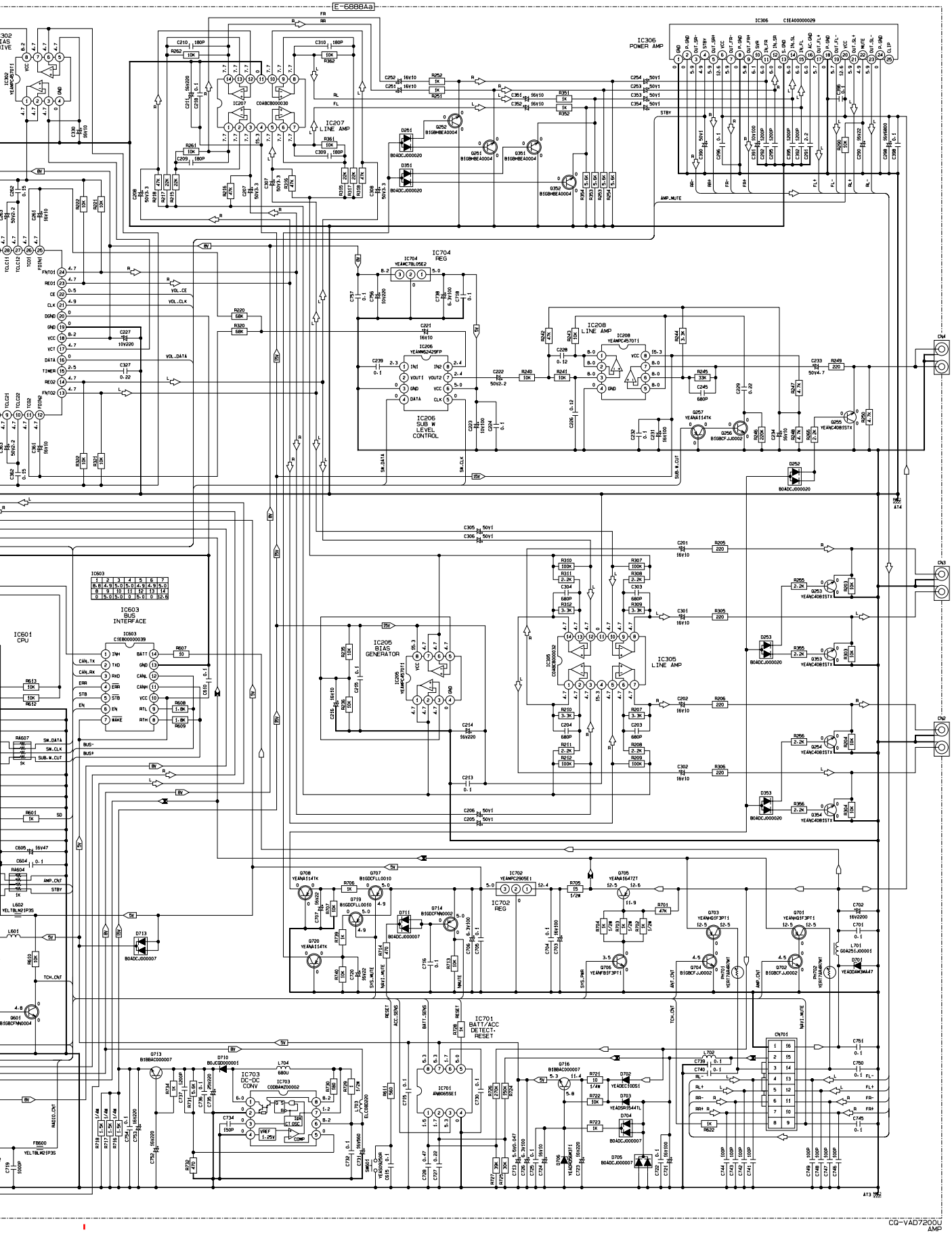

CQ-VAD7200U
AMP

23.8. DVD Deck-1 Block

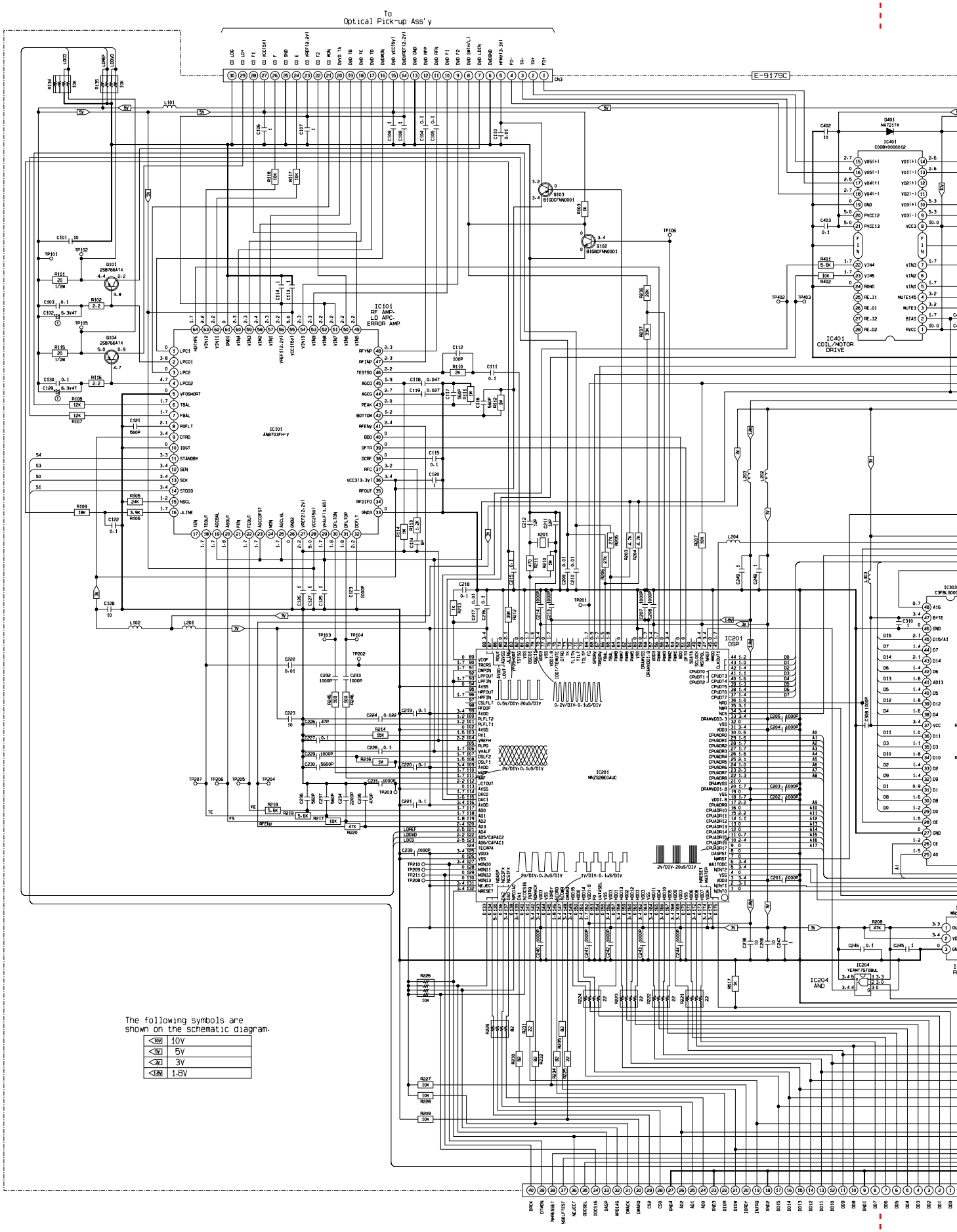

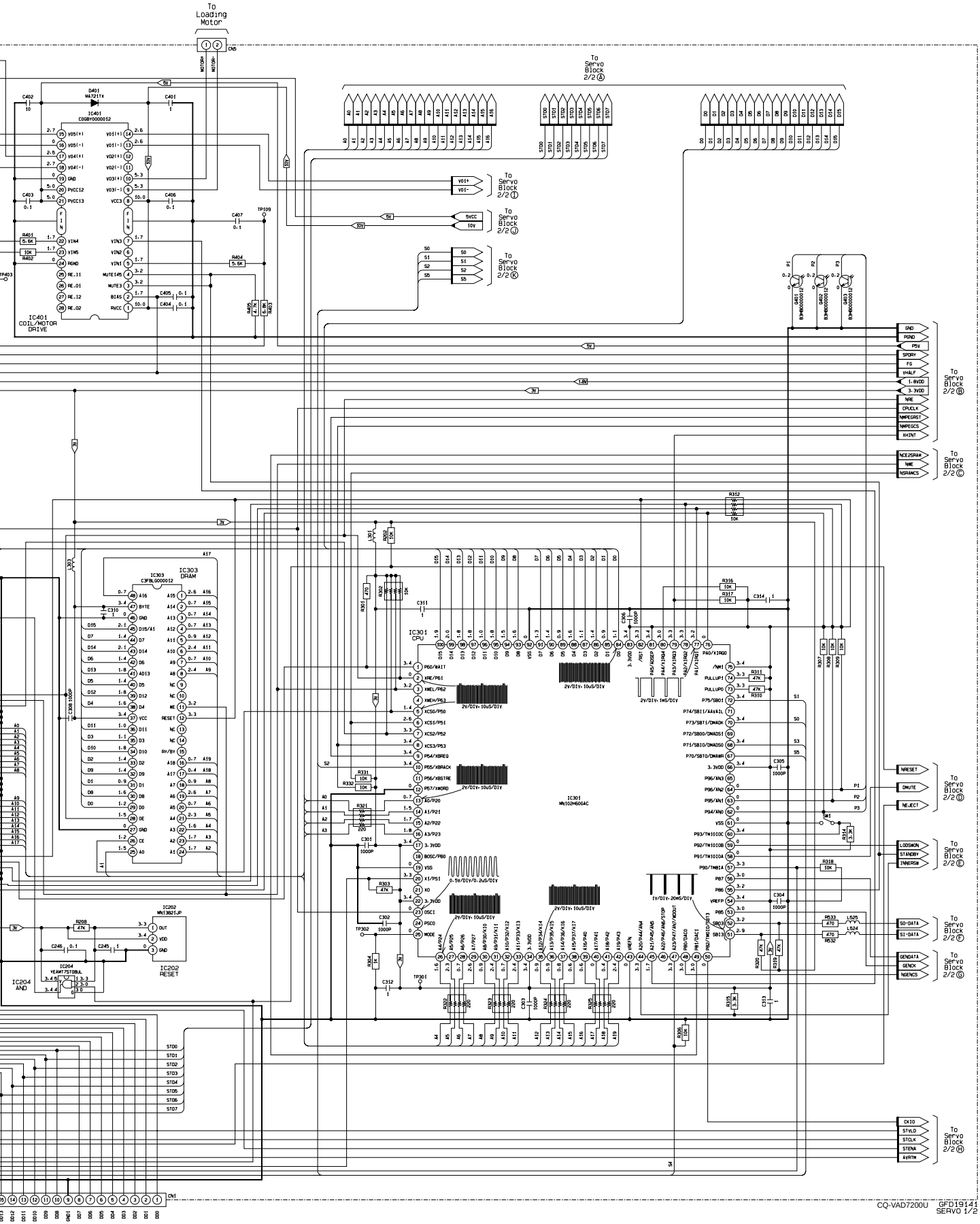

CQ-VAD7200U GFD19141 SERVO 1/2

23.9. DVD Deck-2 Block

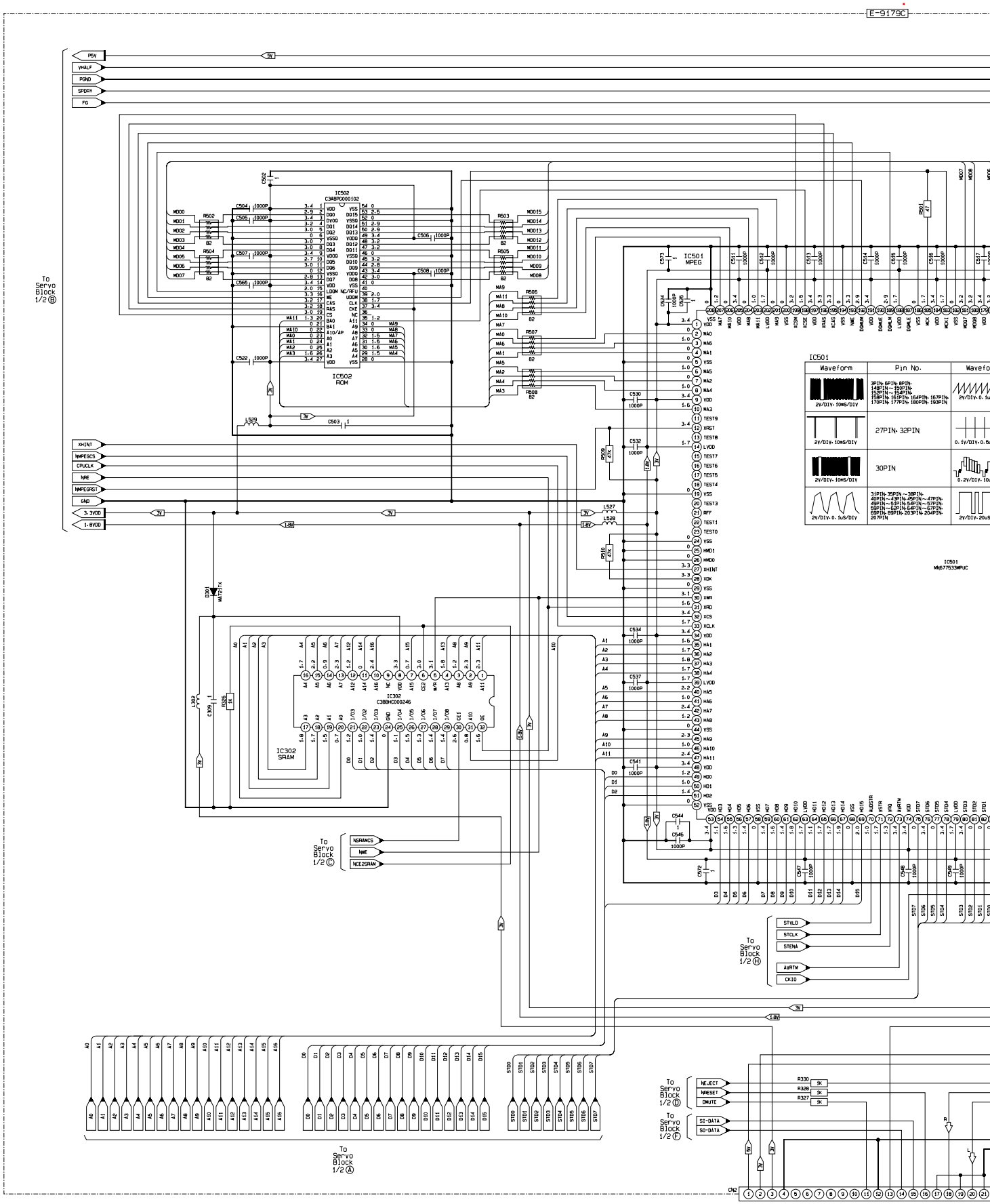

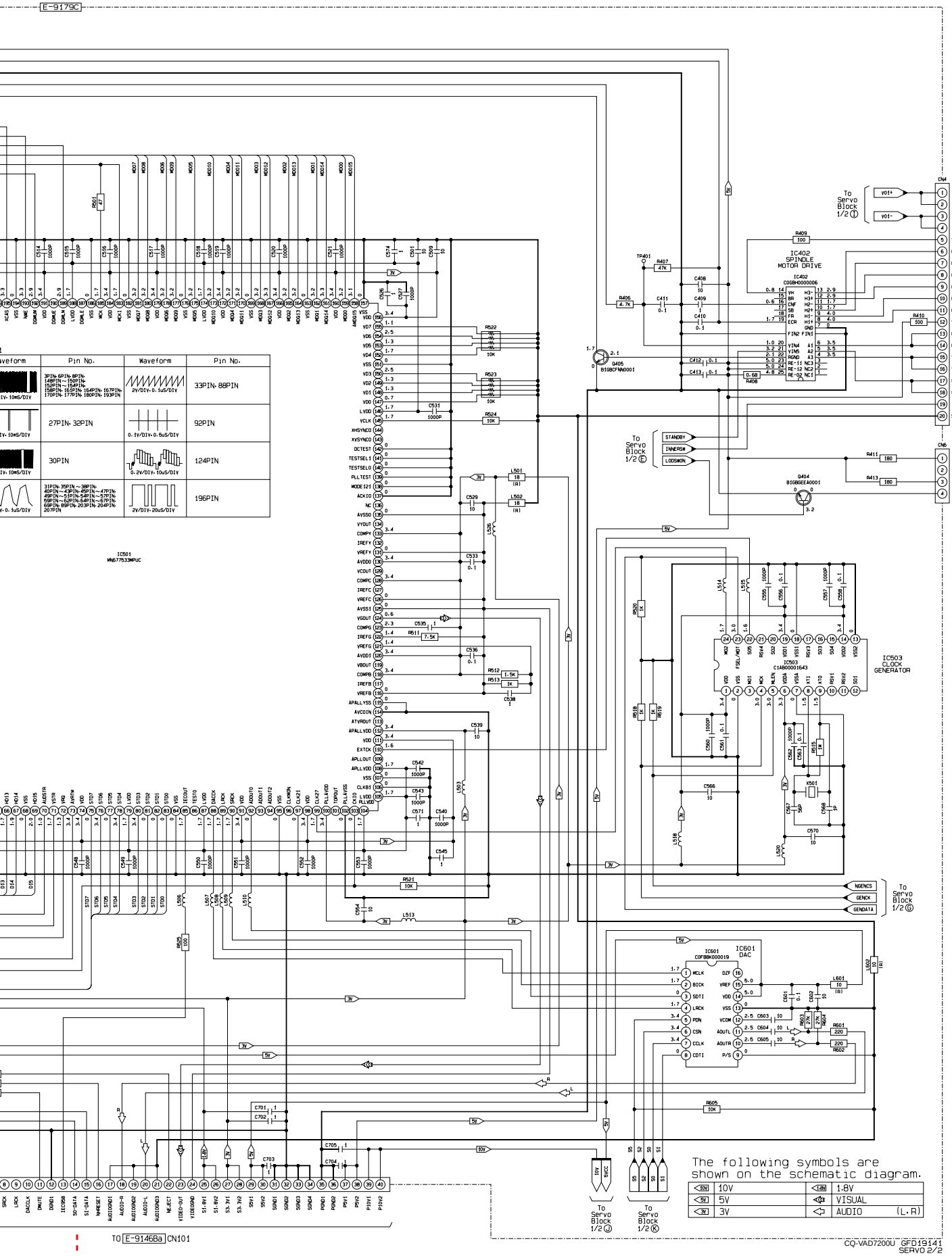

Printed in Japan 2002.6 (K) (Recycled Paper)

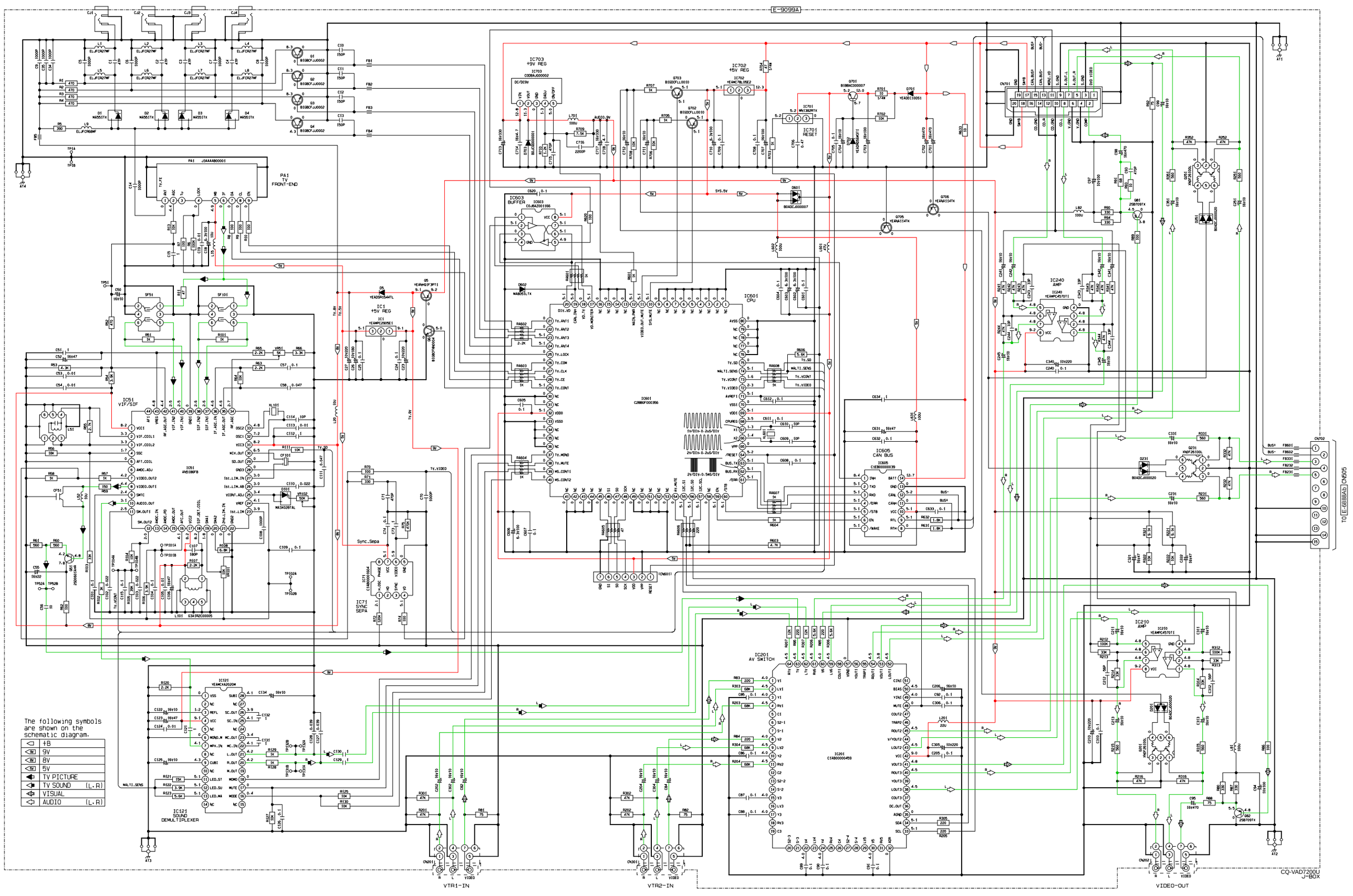
E-9099A
PA1 TV FRONT-END
IC703 +5V REG
IC702 +5V REG
IC701 RESET
IC603 BUFFER
IC601 CPU
IC605 CAN BUS
IC51 VIF/SIF
IC1 +5V REG
IC71 SYNC SEPA
IC121 SOUND DEMULTIPLEXER
IC201 AV SWITCH
IC240 AMP
IC210 AMP
CN701
CN702
CN201
CN301
VTR1-IN
VTR2-IN
VIDEO-OUT
TO IE-6898Ab CN605
CQ-VAD7200U
J-BOX
The following symbols are shown on the schematic diagram.
+B
9V
8V
5V
TV PICTURE
TV SOUND (L.R)
VISUAL
AUDIO (L.R)

23.7. J-Box Block

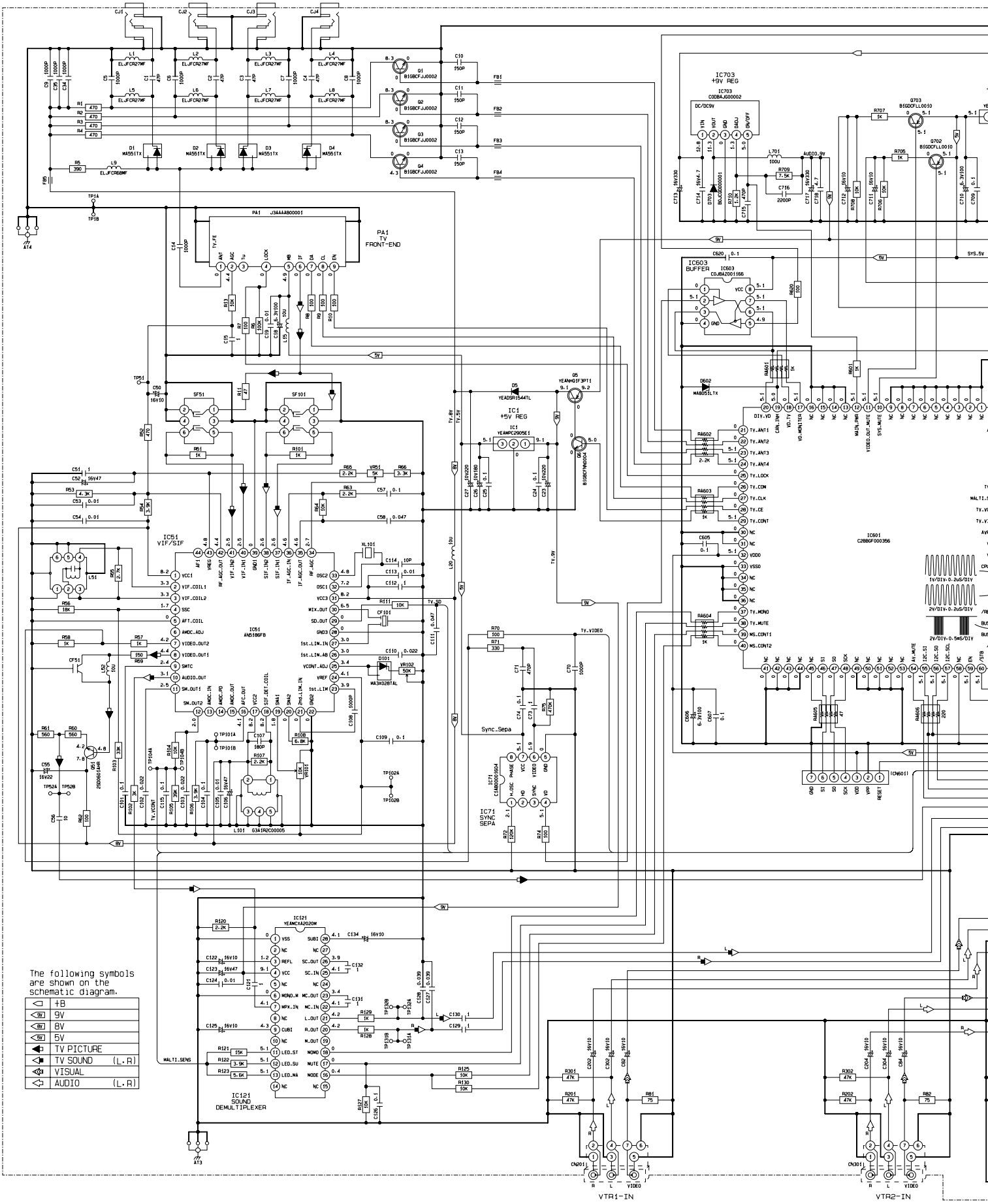

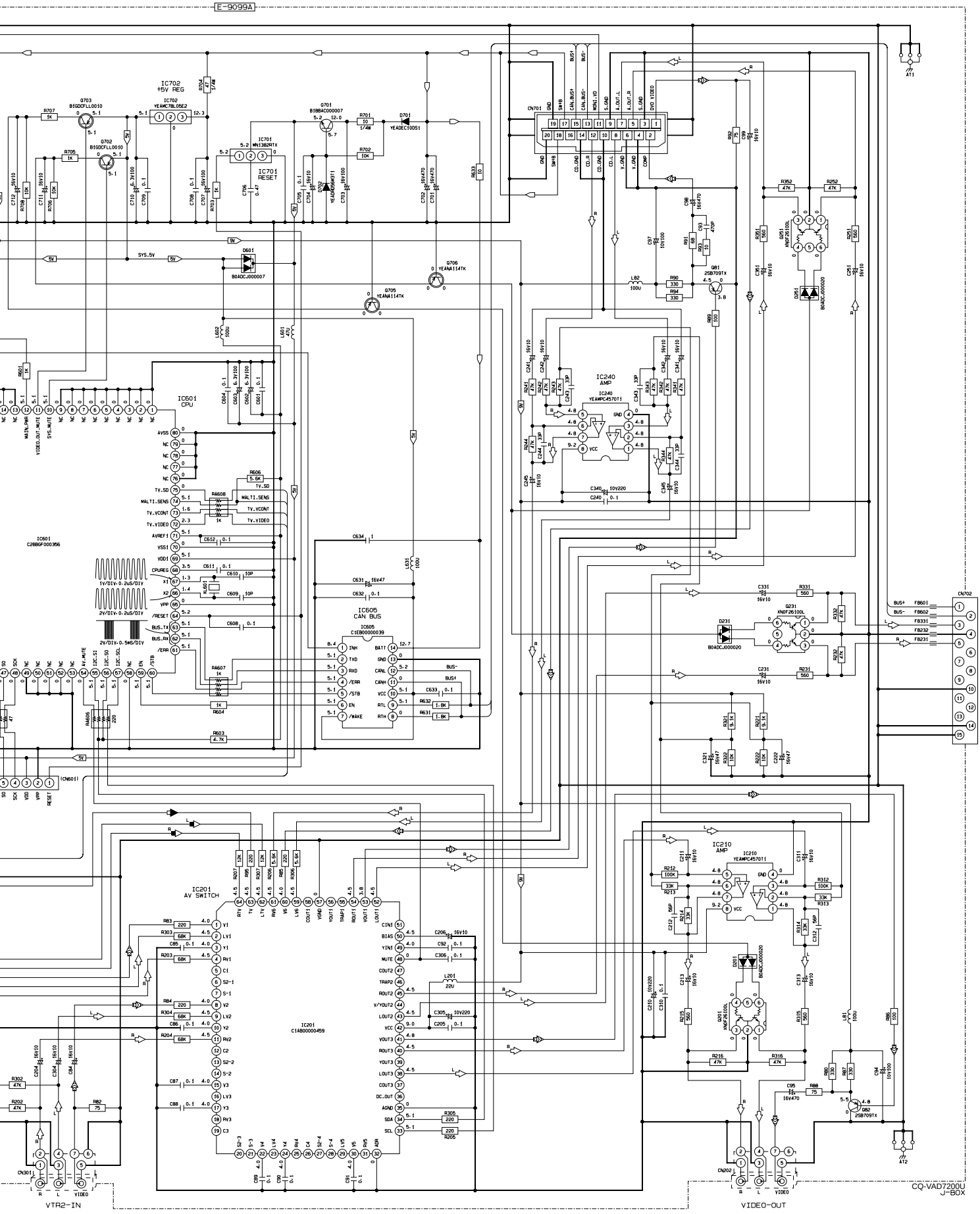
E-9099A
IC702
+5V REG
IC701
RESET
IC601
CPU
IC605
CAN BUS
IC240
AMP
IC210
AMP
IC201
AV SWITCH
CN702
TO E-6888AD CN605
VTR2-IN
VIDEO-OUT
CQ-VAD7200U
J-BOX

23 SCHEMATIC DIAGRAM-2

23.1. Main-1 Block

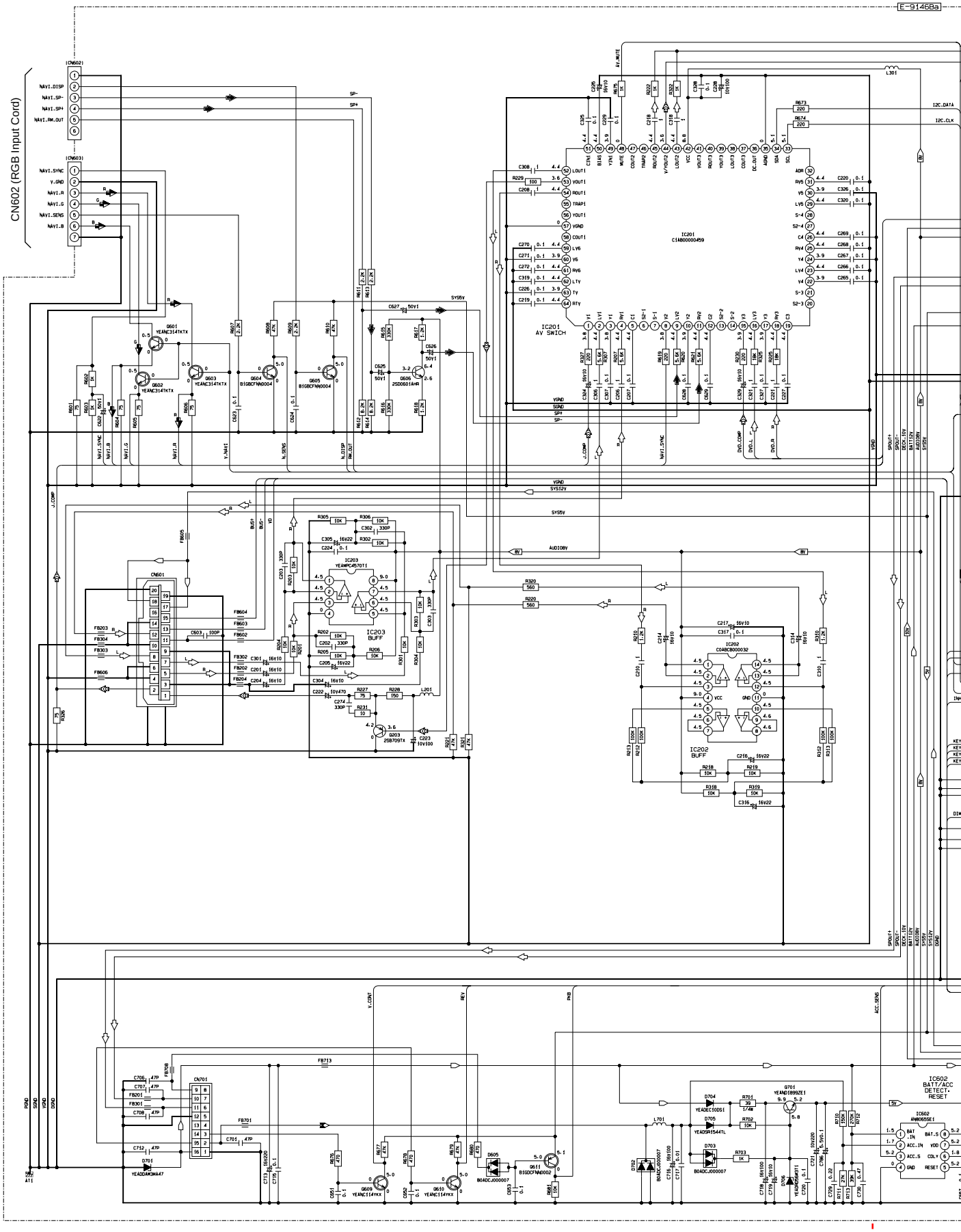

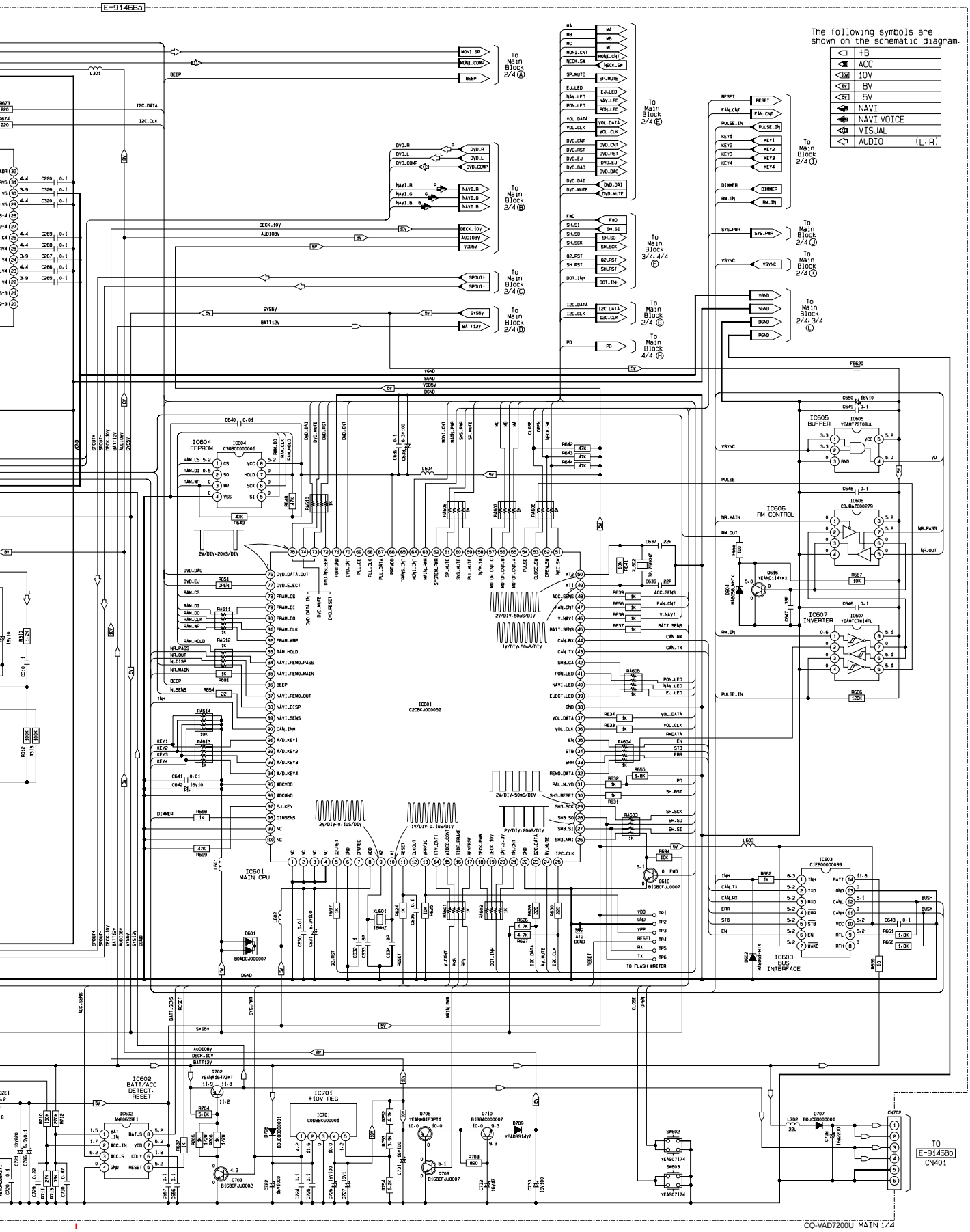
E-9146Ba
The following symbols are shown on the schematic diagram.
+B
ACC
10V
8V
5V
NAVI
NAVI VOICE
VISUAL
AUDIO (L.R)
IC601 MAIN CPU
IC604 EEPROM
IC605 BUFFER
IC606 FM CONTROL
IC607 INVERTER
IC603 BUS INTERFACE
IC602 BATT/ACC DETECT. RESET
IC701 +10V REG
TO FLASH WRITER
TO E-9146Bb CN401
CQ-VAD7200U MAIN 1/4

23.2. Main-2 Block

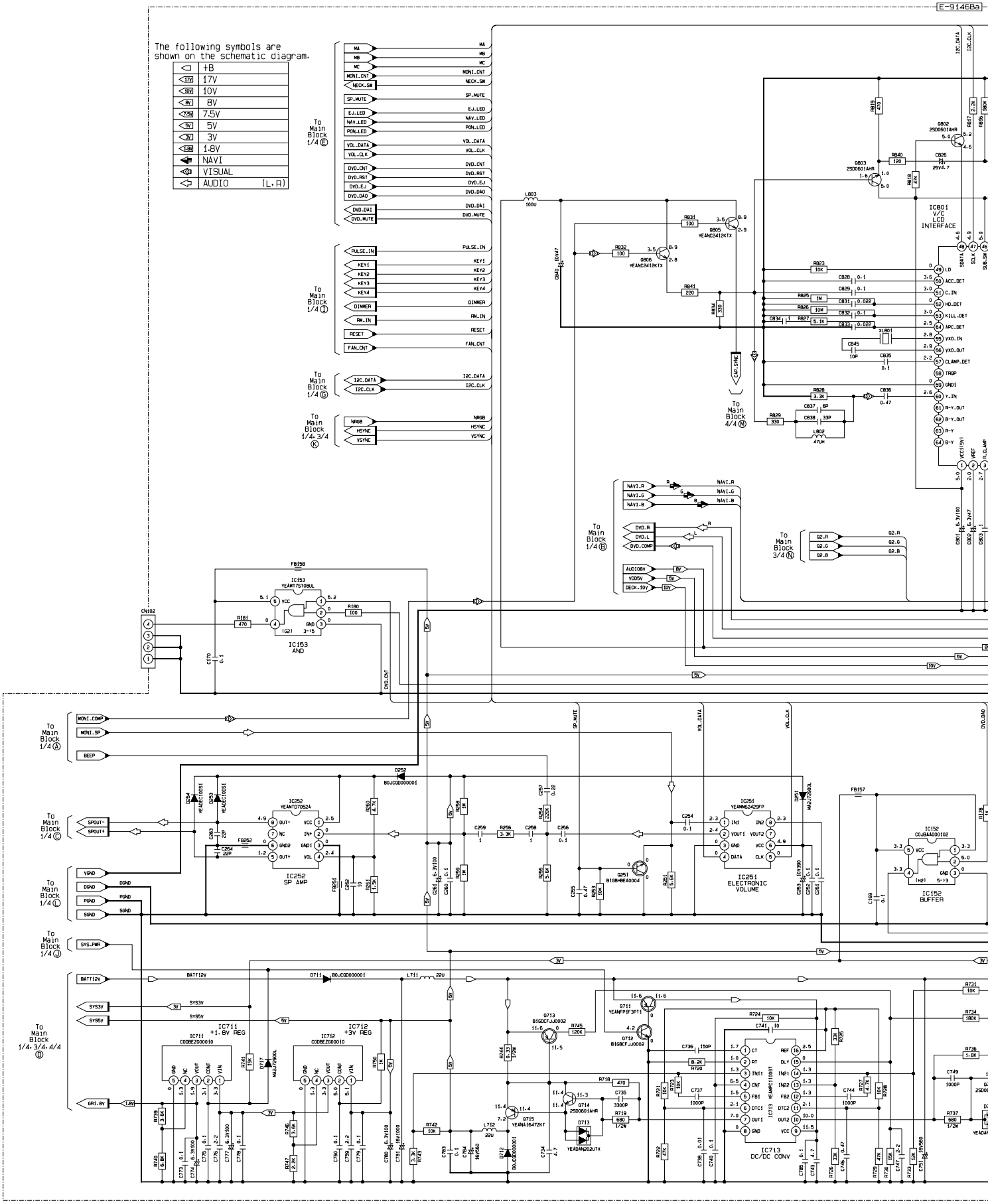

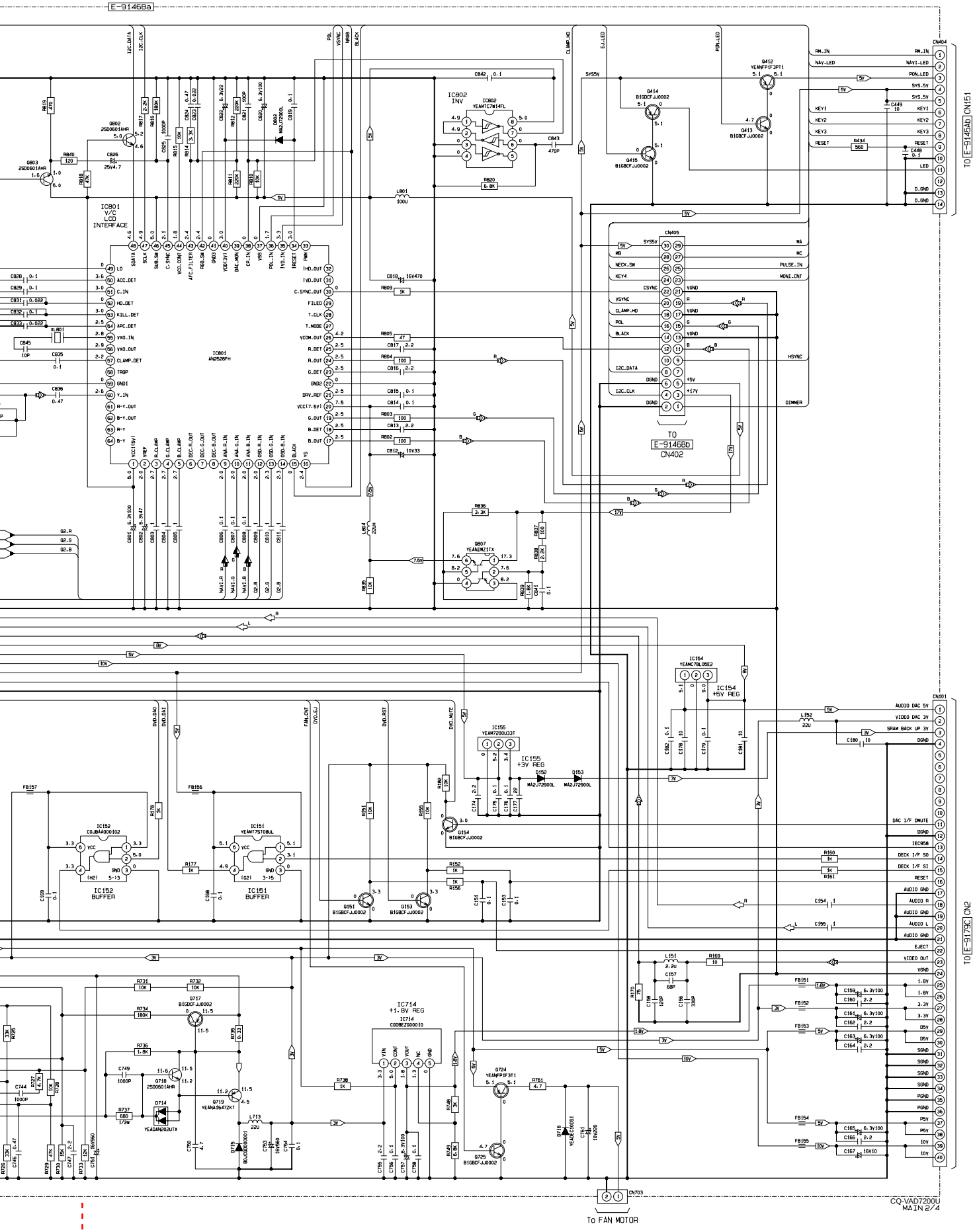
E-9146Ba
IC801
V/C
LCD
INTERFACE
IC801
AN2526FH
IC802
INV
IC802
YEAMTC74I4FL
IC154
YEAMC7B106E2
IC154
+5V REG
IC155
YEAM7200U33T
IC155
+3V REG
IC152
C0.BAA000102
IC152
BUFFER
IC151
YEAM7S708UL
IC151
BUFFER
IC714
+1.8V REG
IC714
CODBEZG00010
CN404
TO E-9146Ab CN151
CN405
TO
E-9146Bb
CN402
CN101
TO E-9175C CN2
CN703
To FAN MOTOR
CQ-VAD7200U
MAIN 2/4

23.3. Main-3 Block

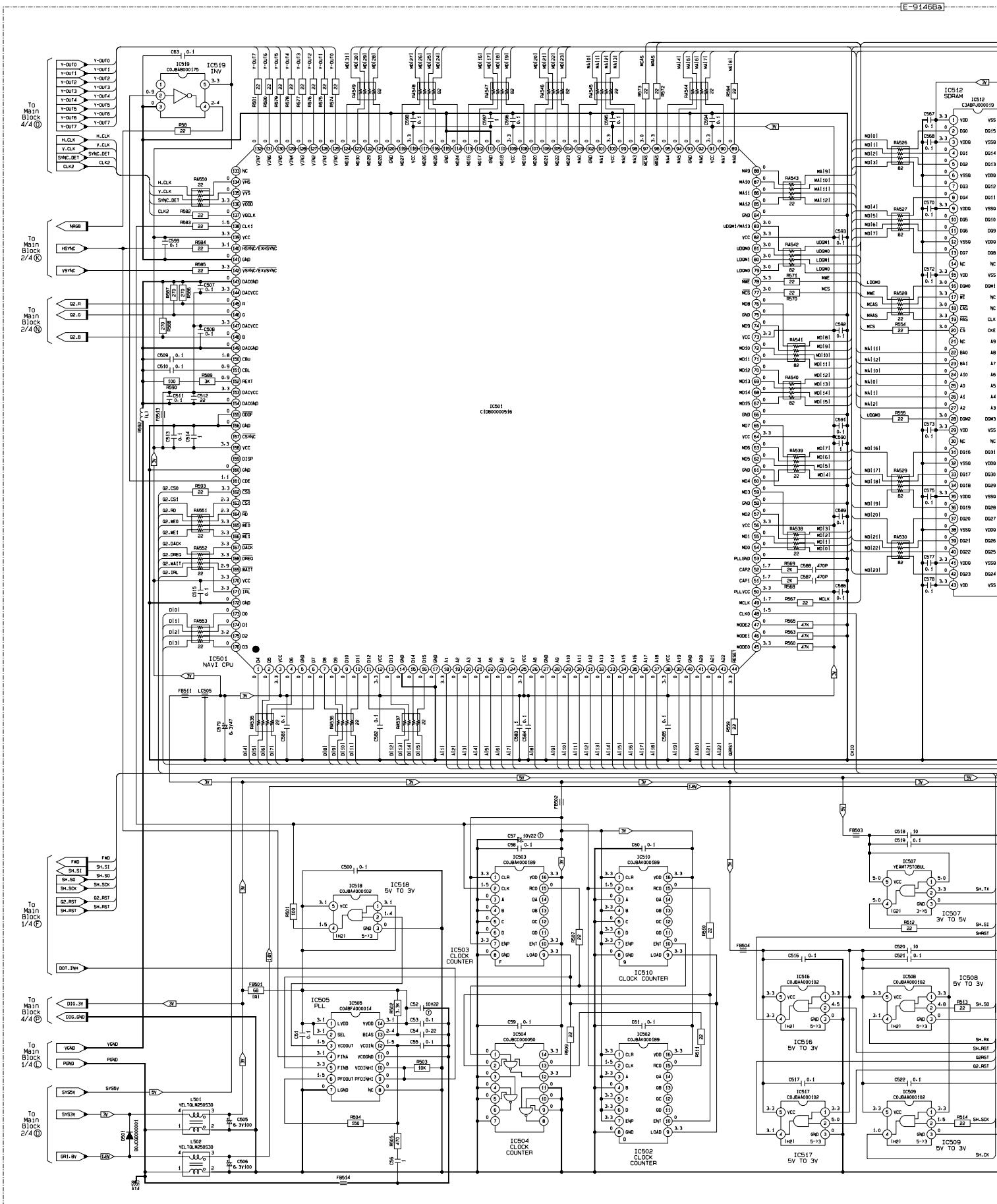

E-91468a

The following symbols are shown on the schematic diagram.

5V	3V	1.8V

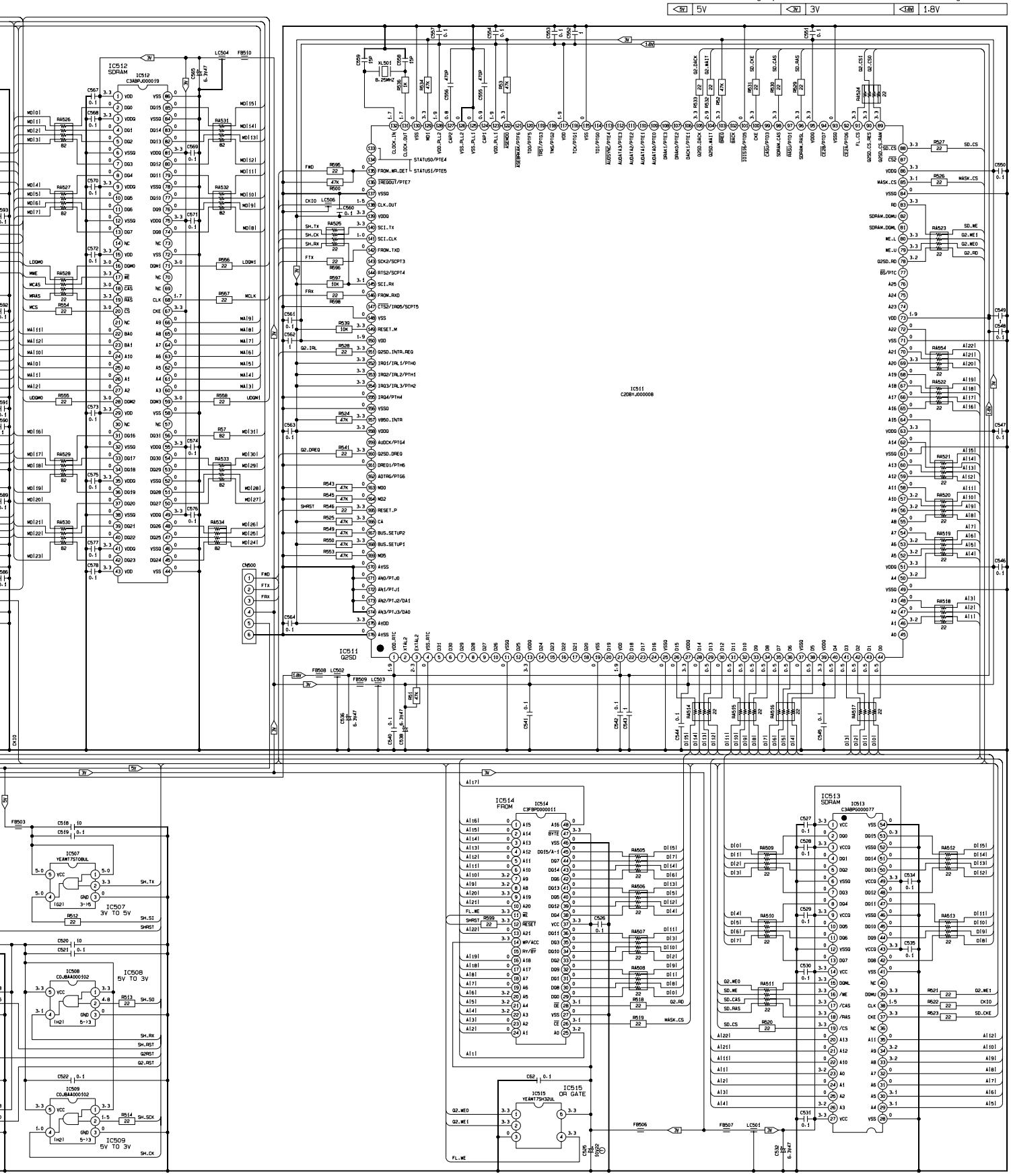

22.2. Main-4 Block

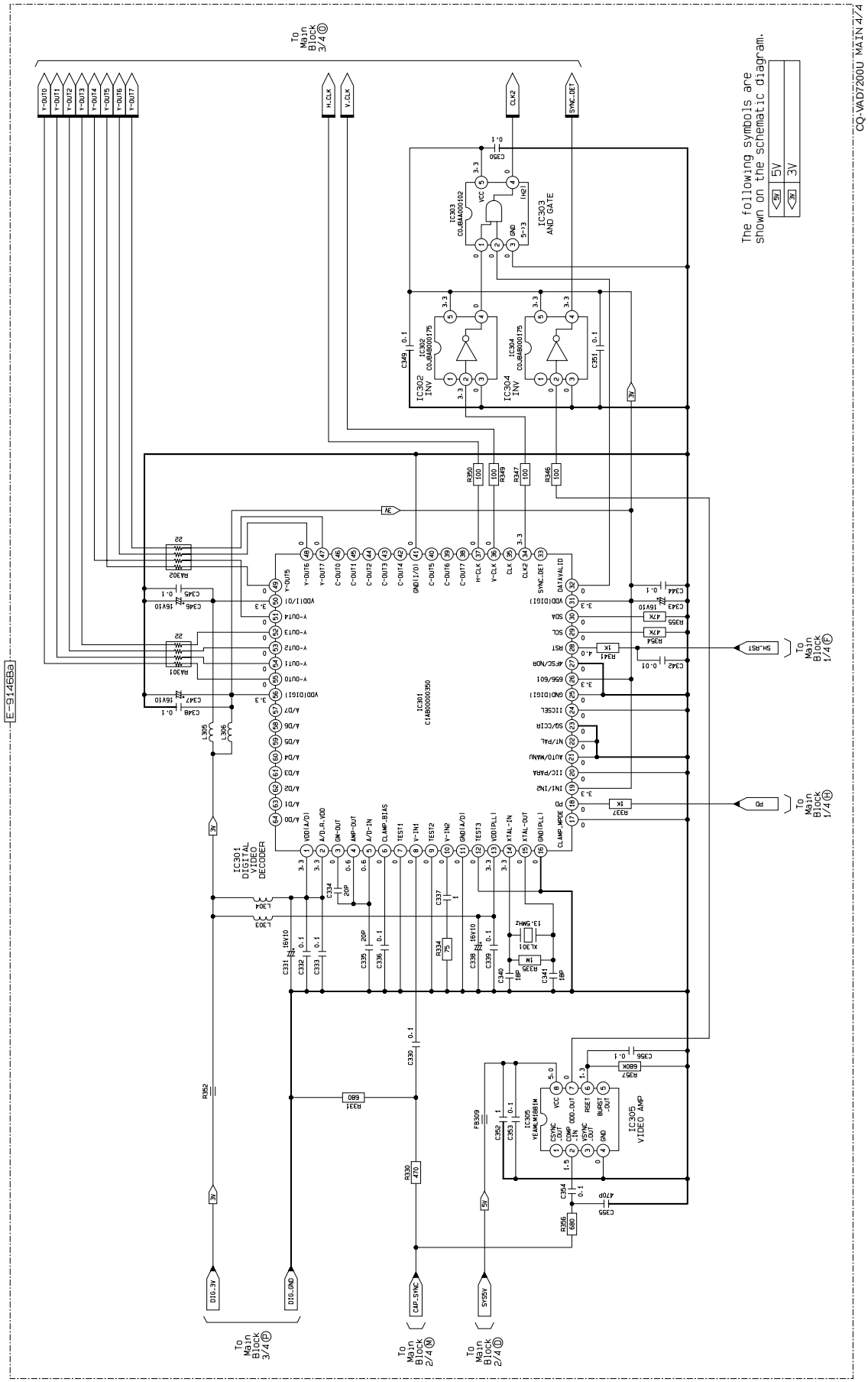

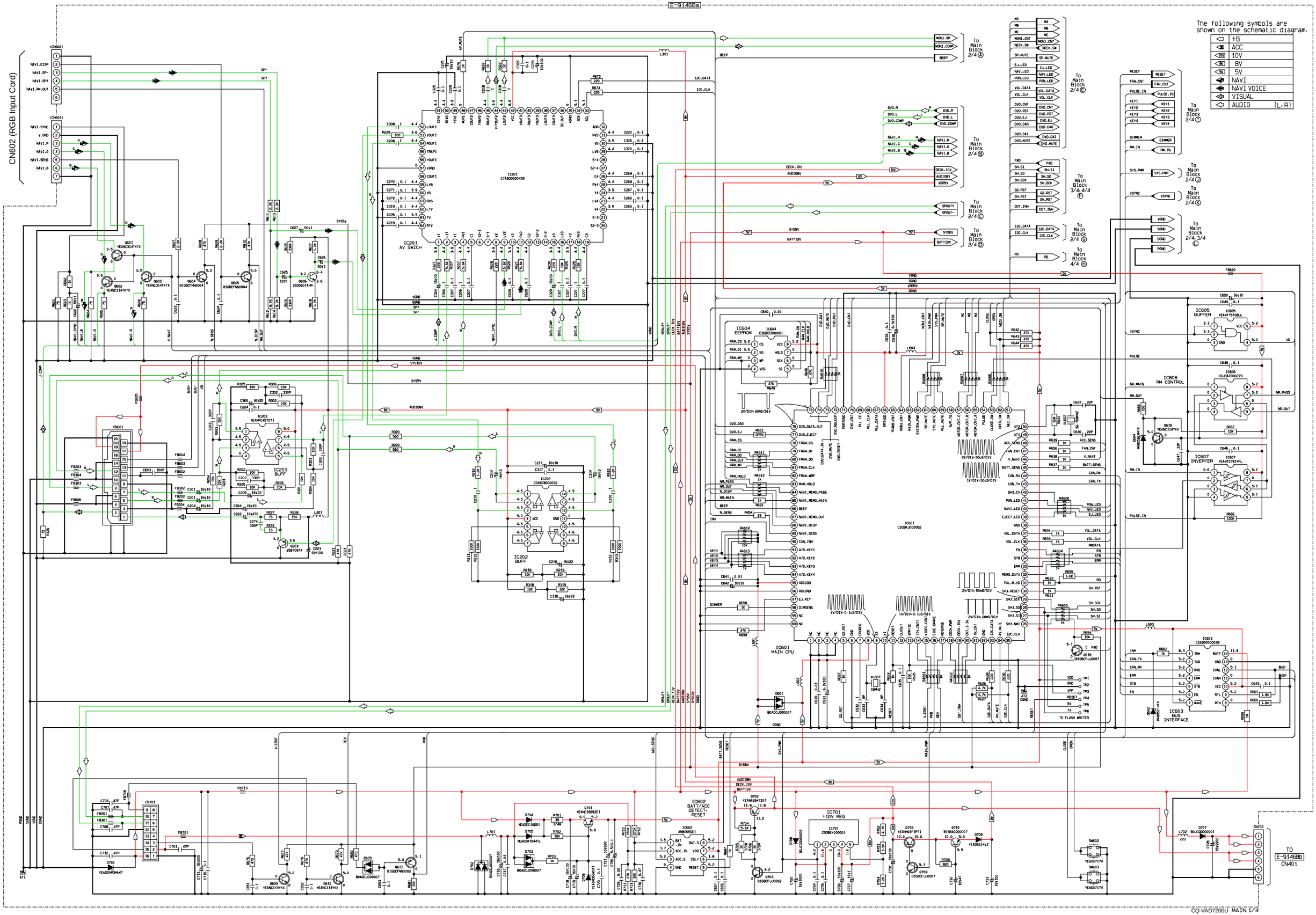
E-9146Ba
CN602 (RGB Input Cord)
IC201 AV SWITCH
IC604 EEPROM
IC601 MAIN CPU
IC605 BUFFER
IC606 RM CONTROL
IC607 INVERTER
IC603 BUS INTERFACE
IC203 BUFF
IC202 BUFF
IC602 BATT/ACC DETECT+ RESET
IC701 +10V REG
The following symbols are shown on the schematic diagram.
+B
ACC
10V
8V
5V
NAVI
NAVI VOICE
VISUAL
AUDIO (L.R)
To Main Block 2/4 (A)
To Main Block 2/4 (B)
To Main Block 2/4 (C)
To Main Block 2/4 (D)
To Main Block 2/4 (E)
To Main Block 3/4, 4/4 (F)
To Main Block 2/4 (G)
To Main Block 4/4 (H)
To Main Block 2/4 (I)
To Main Block 2/4 (J)
To Main Block 2/4 (K)
To Main Block 2/4, 3/4 (L)
TO FLASH WRITER
TO E-9146Bb CN401

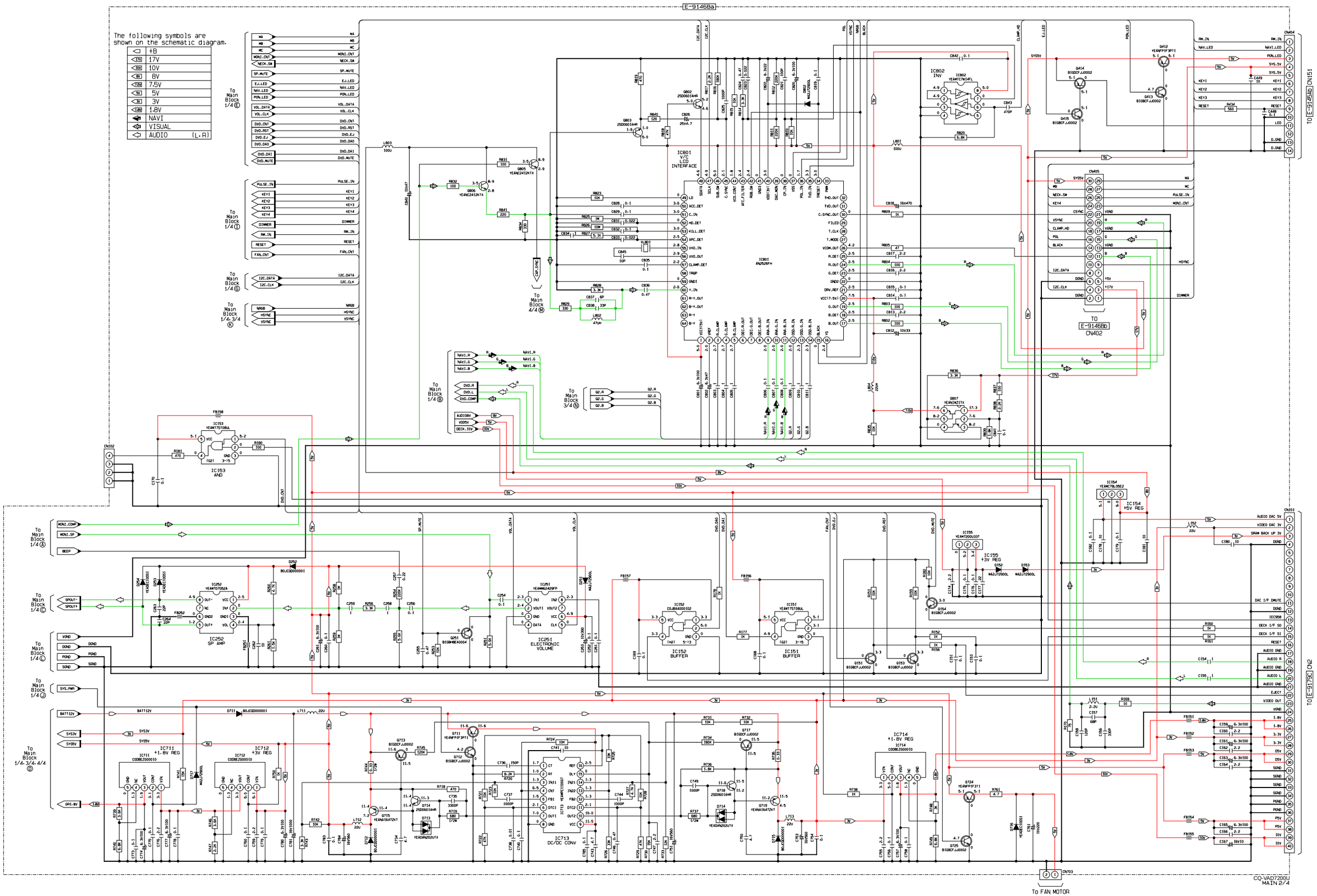
E-91468a
The following symbols are shown on the schematic diagram.
+B
17V
10V
8V
7.5V
5V
3V
1.8V
NAVI
VISUAL
AUDIO (L.R)
To Main Block 1/4 Ⓔ
To Main Block 1/4 Ⓕ
To Main Block 1/4 Ⓖ
To Main Block 1/4. 3/4 Ⓚ
To Main Block 4/4 Ⓜ
To Main Block 1/4 Ⓑ
To Main Block 3/4 Ⓝ
To Main Block 1/4 Ⓐ
To Main Block 1/4 Ⓒ
To Main Block 1/4 Ⓛ
To Main Block 1/4 Ⓓ
To Main Block 1/4. 3/4. 4/4 Ⓘ
ICB01 V/C LCD INTERFACE
ICB06 AN26262FH
IC153 AND
IC252 SP AMP
IC251 ELECTRONIC VOLUME
IC152 BUFFER
IC151 BUFFER
IC154 +5V REG
IC155 +3V REG
IC711 +1.8V REG
IC712 +3V REG
IC713 DC/DC CONV
IC714 +1.8V REG
CN404
CN151
TO E-91258a
CN405
TO E-91468a CN402
CN101
TO E-91759C CN2
CN703
To FAN MOTOR
CO-VAD7200U MAIN 2/4

The following symbols are shown on the schematic diagram.

5V	3V	1.8V

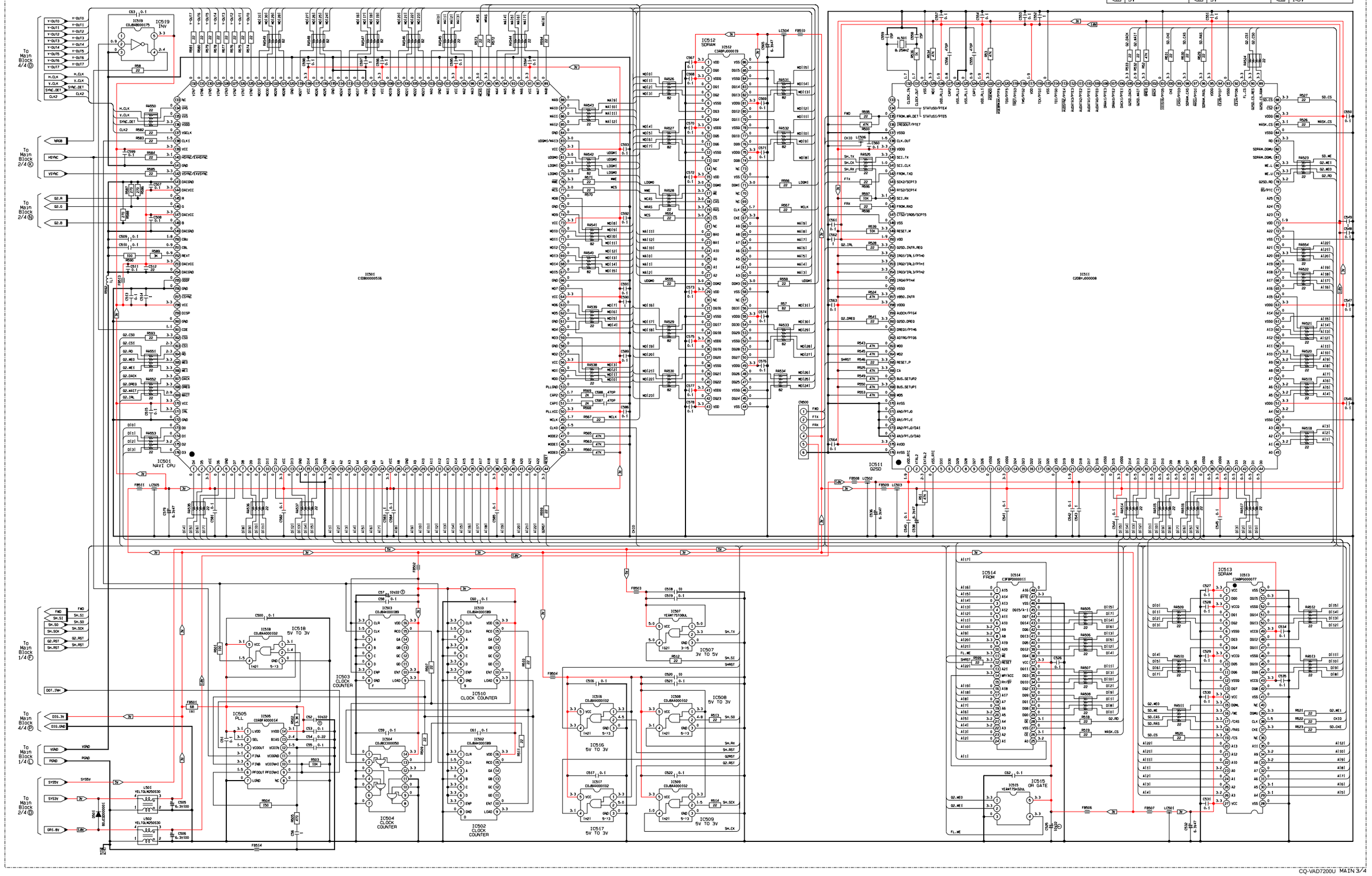

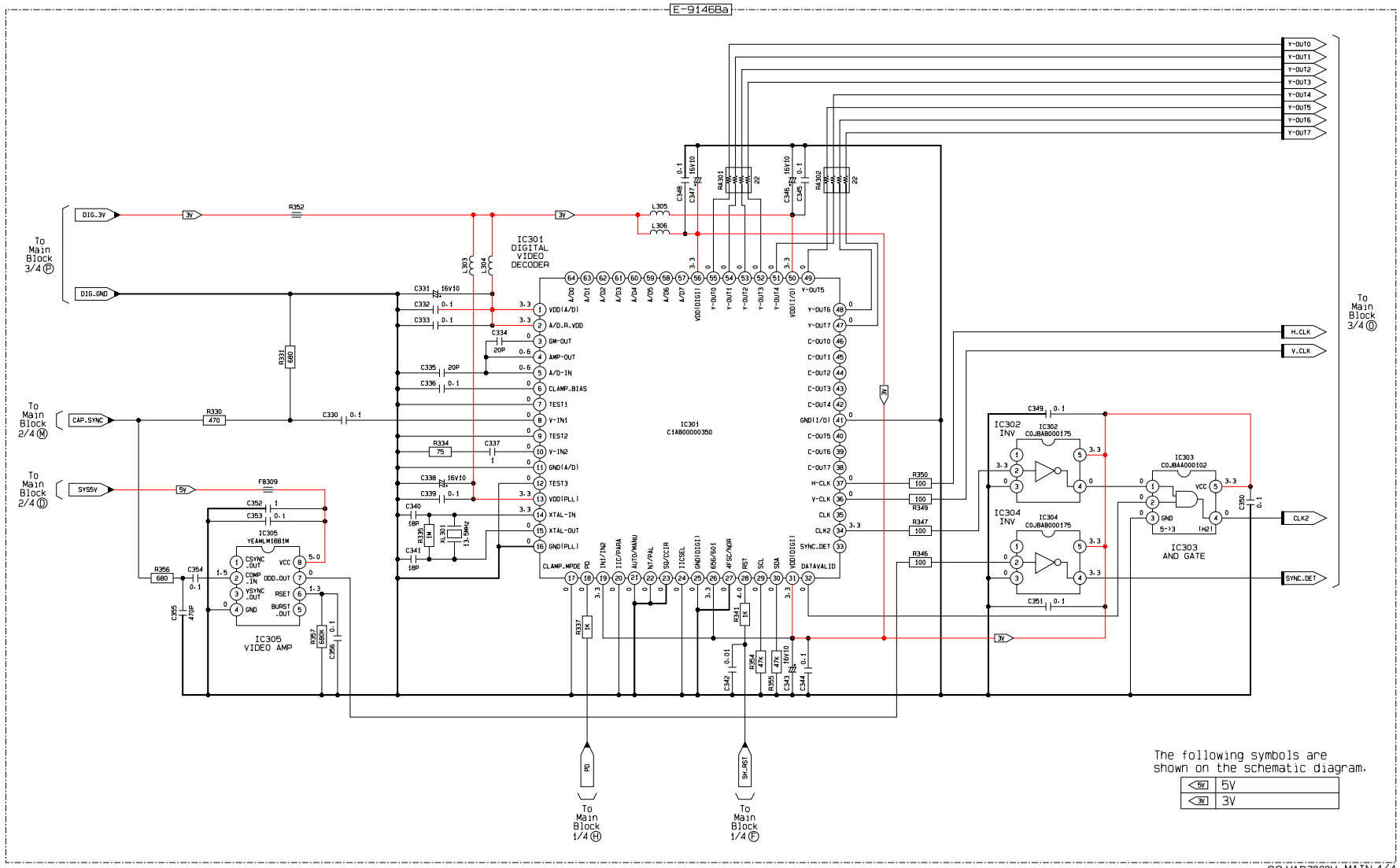

The following symbols are shown on the schematic diagram.

5V	5V
3V	3V

23.5. Monitor Block

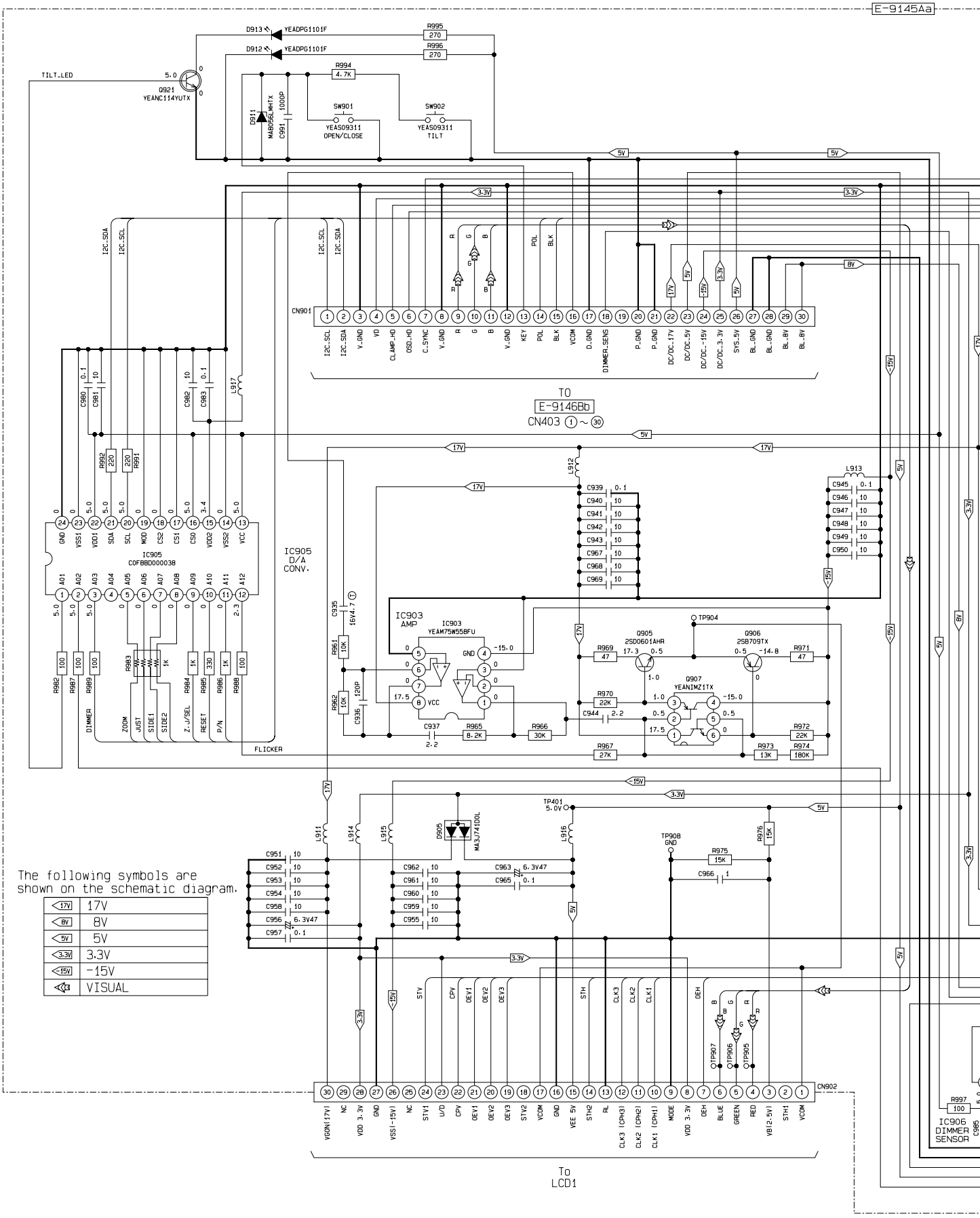

E-9145Aa

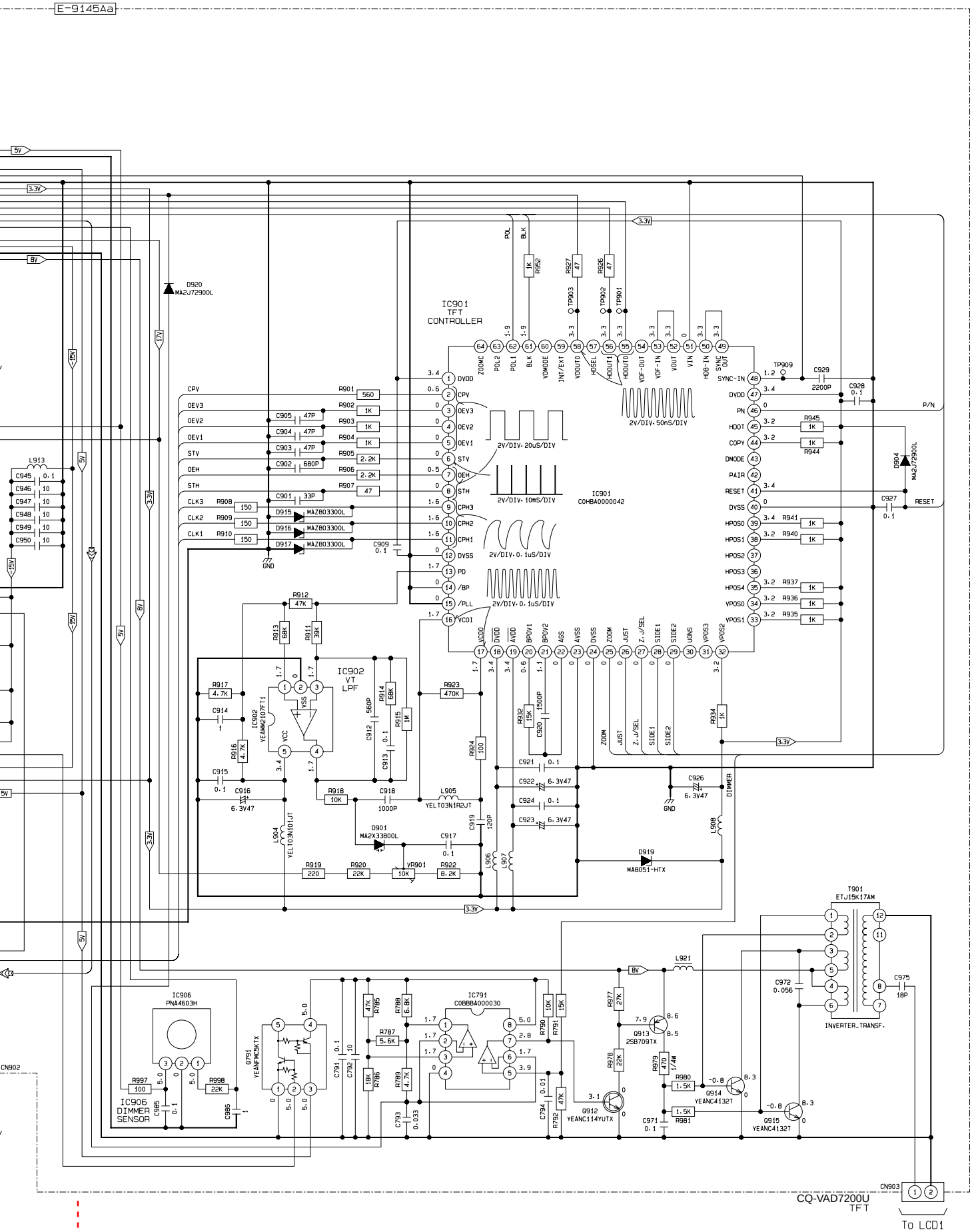
IC901
TFT
CONTROLLER
IC901
C0HBA0000042
IC902
VT
LPF
IC906
PNA4603H
IC906
DIMMER
SENSOR
IC791
C0BBBA000030
T901
ETJ15K17AM
INVERTER_TRANSF.
CN902
CN903
To LCD1
CQ-VAD7200U
TFT

23.4. Sub Block

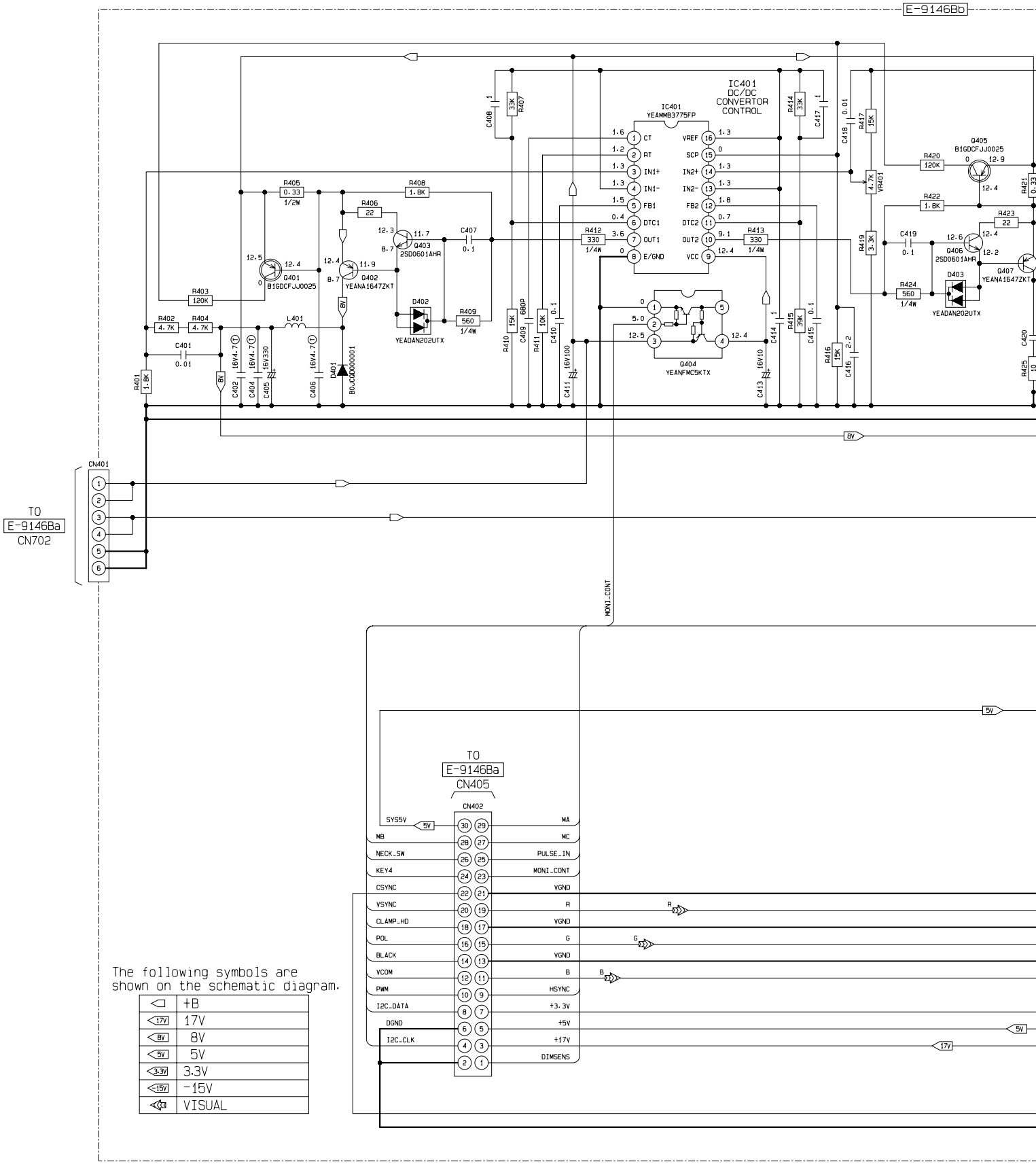

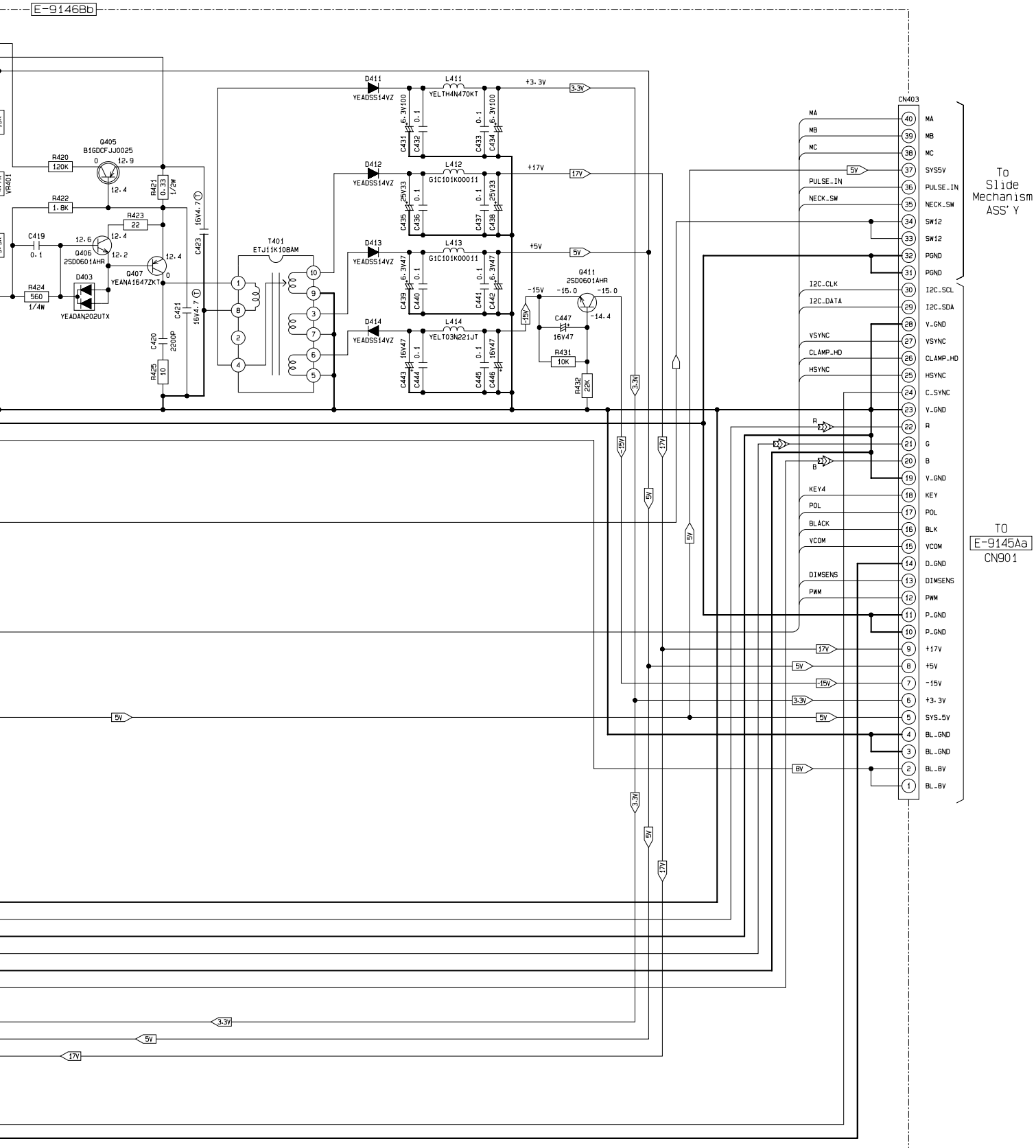

CQ-VAD7200U
SUB

22 SCHEMATIC DIAGRAM-1

22.1. Switch Block

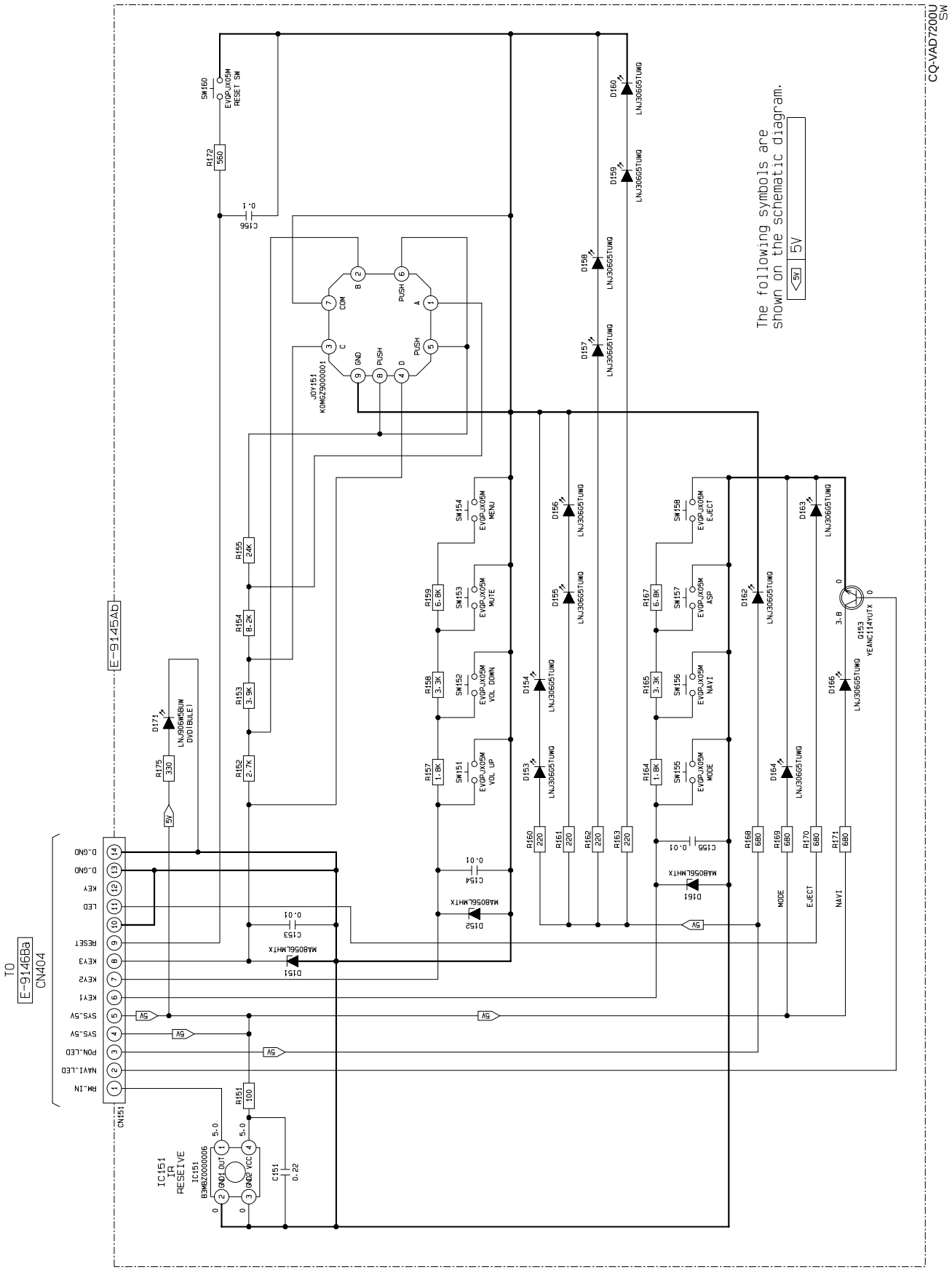

Specification

Supplement

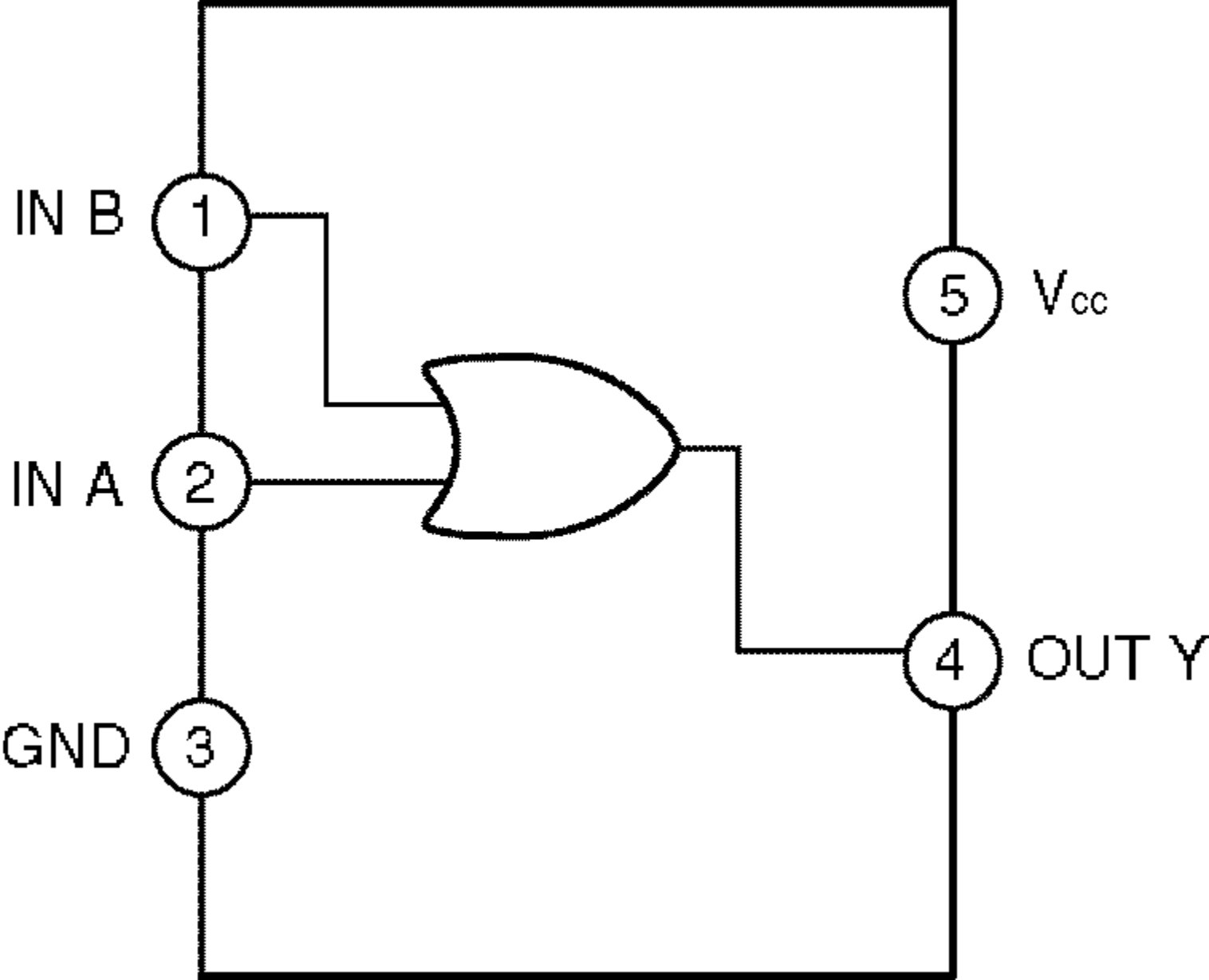
IN B
1
IN A
2
GND
3
5
Vcc
4
OUT Y

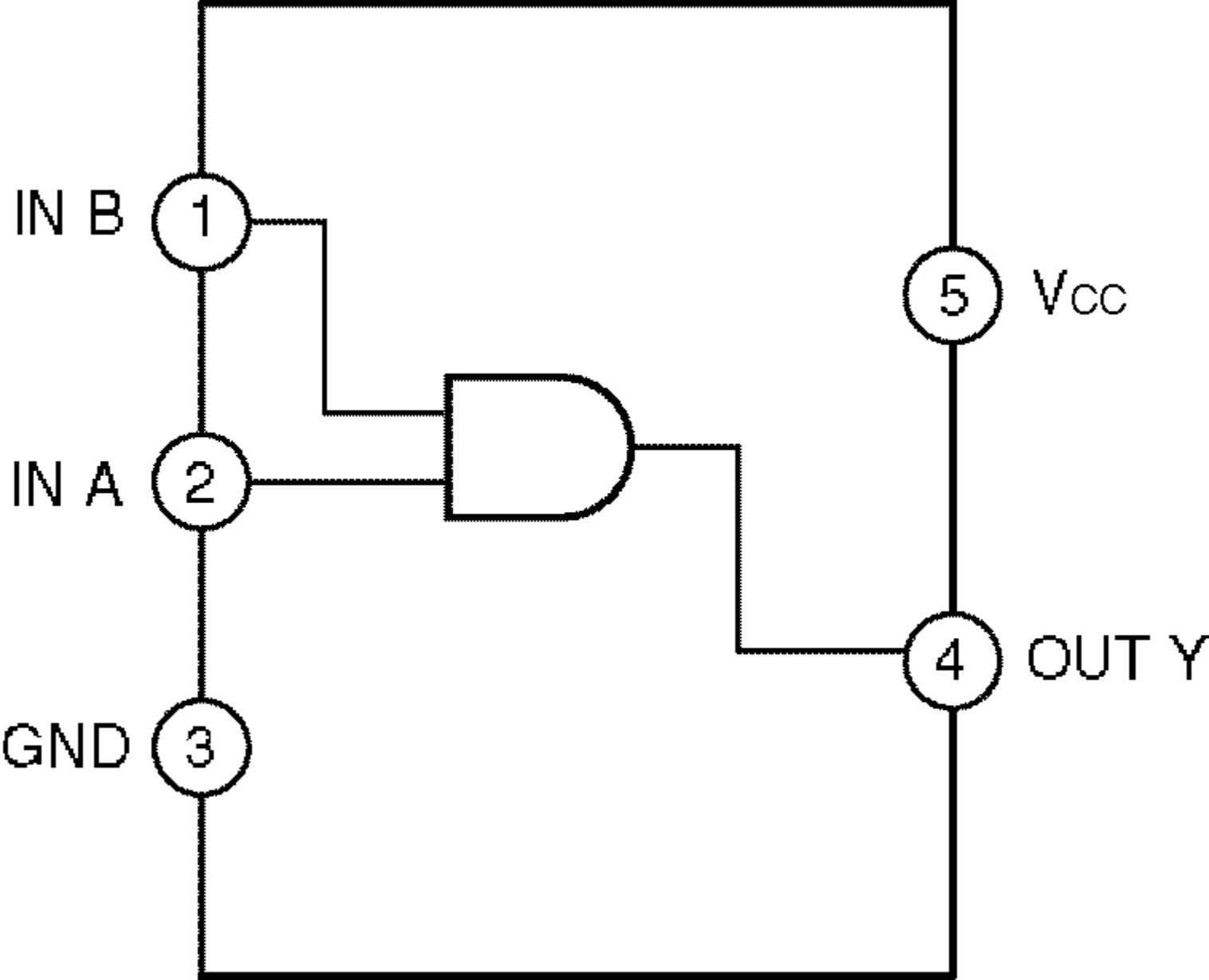
IN B
1
IN A
2
GND
3
5
VCC
4
OUT Y

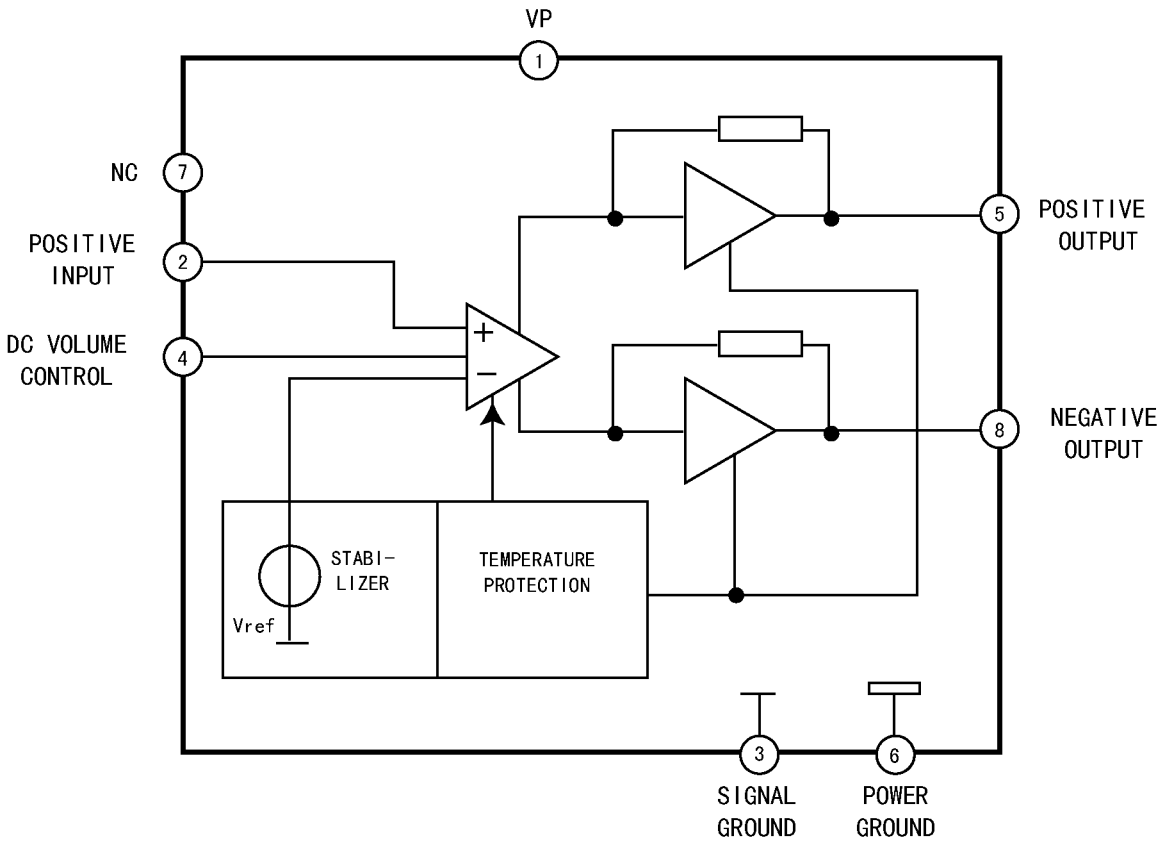
VP
1
NC
7
POSITIVE INPUT
2
DC VOLUME CONTROL
4
5
POSITIVE OUTPUT
8
NEGATIVE OUTPUT
STABI-LIZER
Vref
TEMPERATURE PROTECTION
3
SIGNAL GROUND
6
POWER GROUND

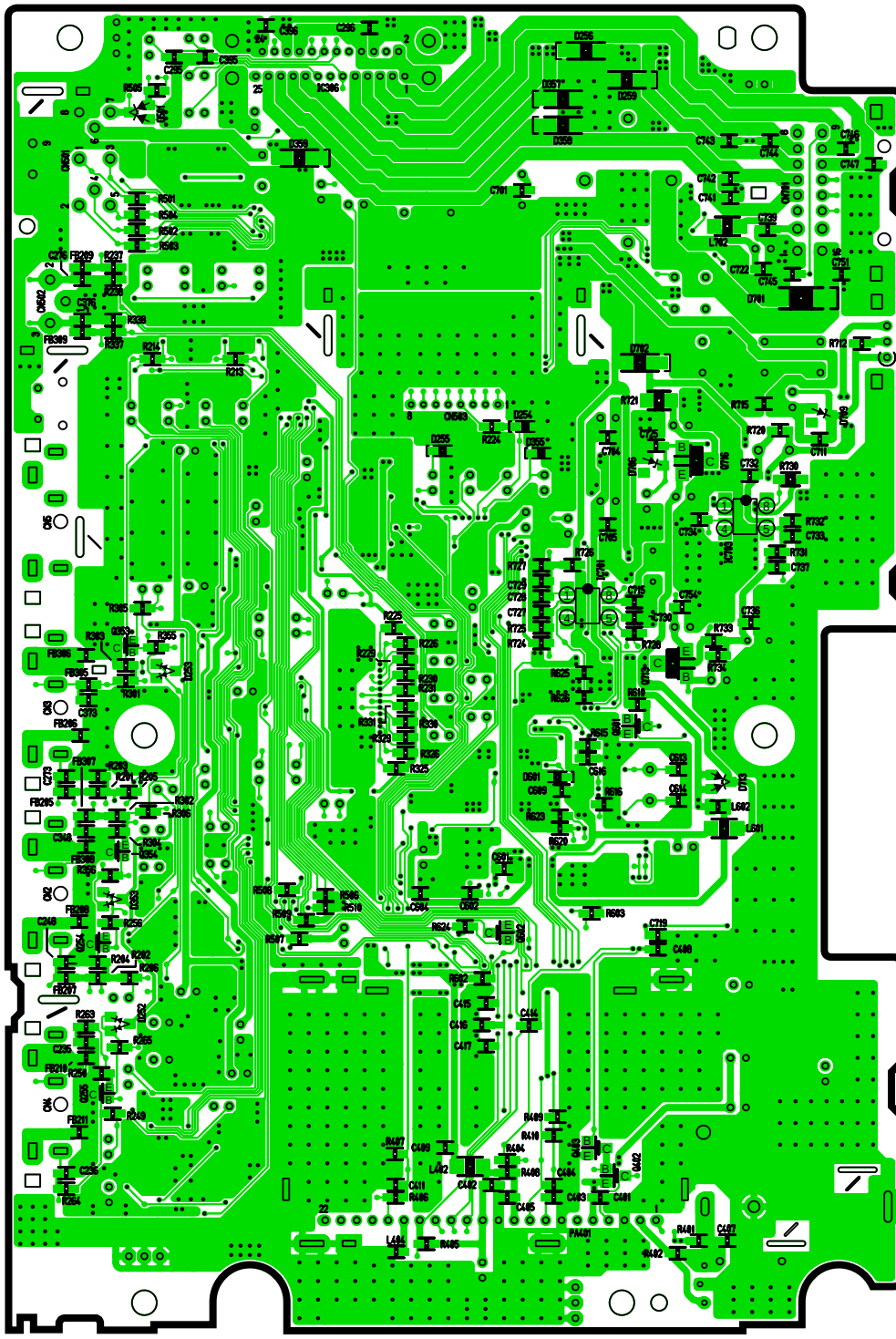

[E-6888Aa] [Bottom View]

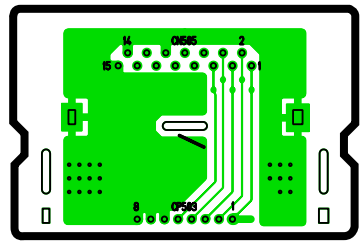

[E-6888Ab] [Bottom View]

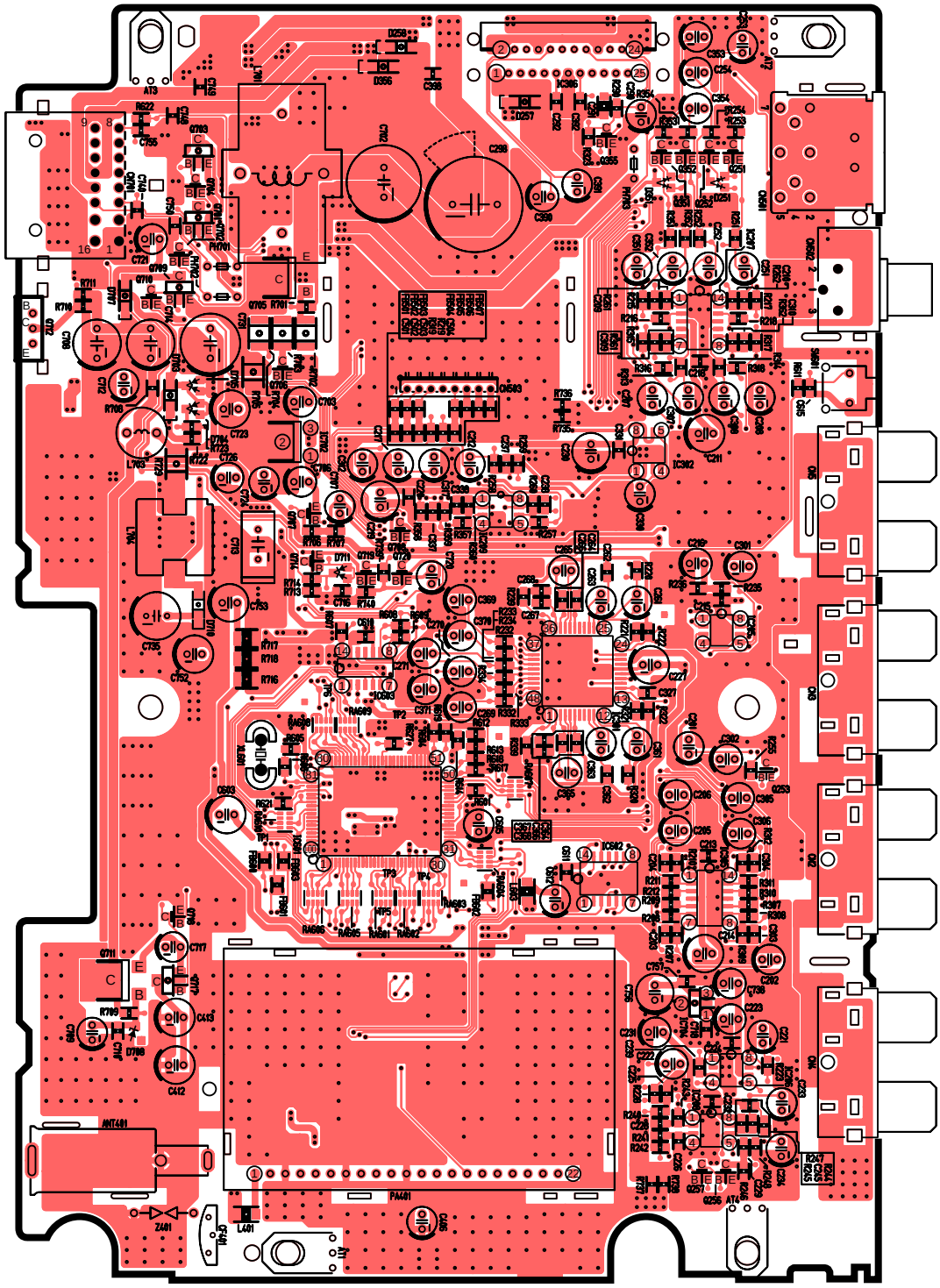

[E-6888Aa] [Top View]

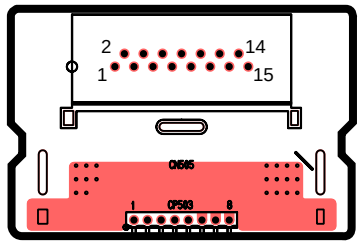

[E-6888Ab] [Top View]

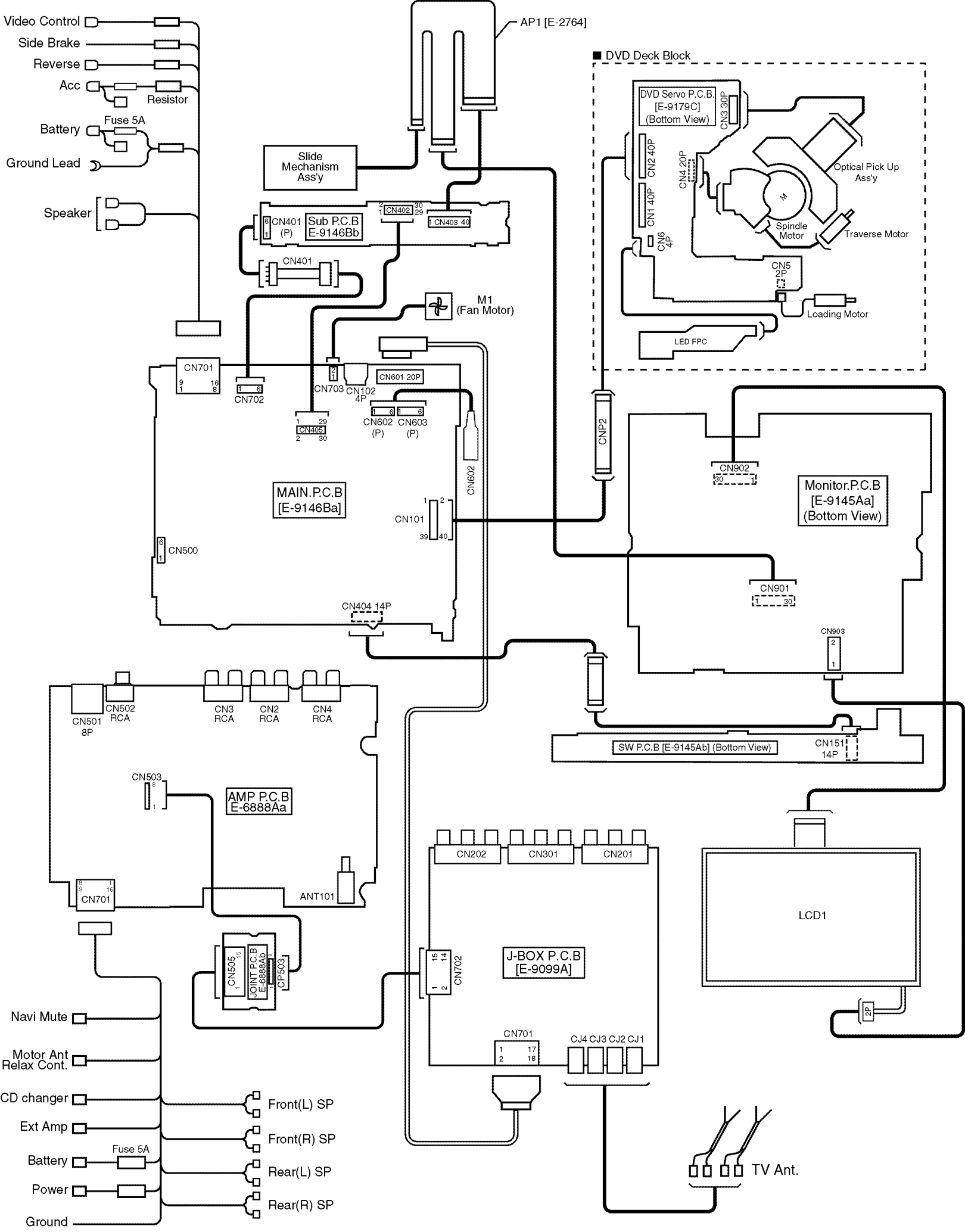

<Note> :

▭ ·····This mark shows a Ref. No. of connector

▭ ·····This mark shows a mounting position of connector.

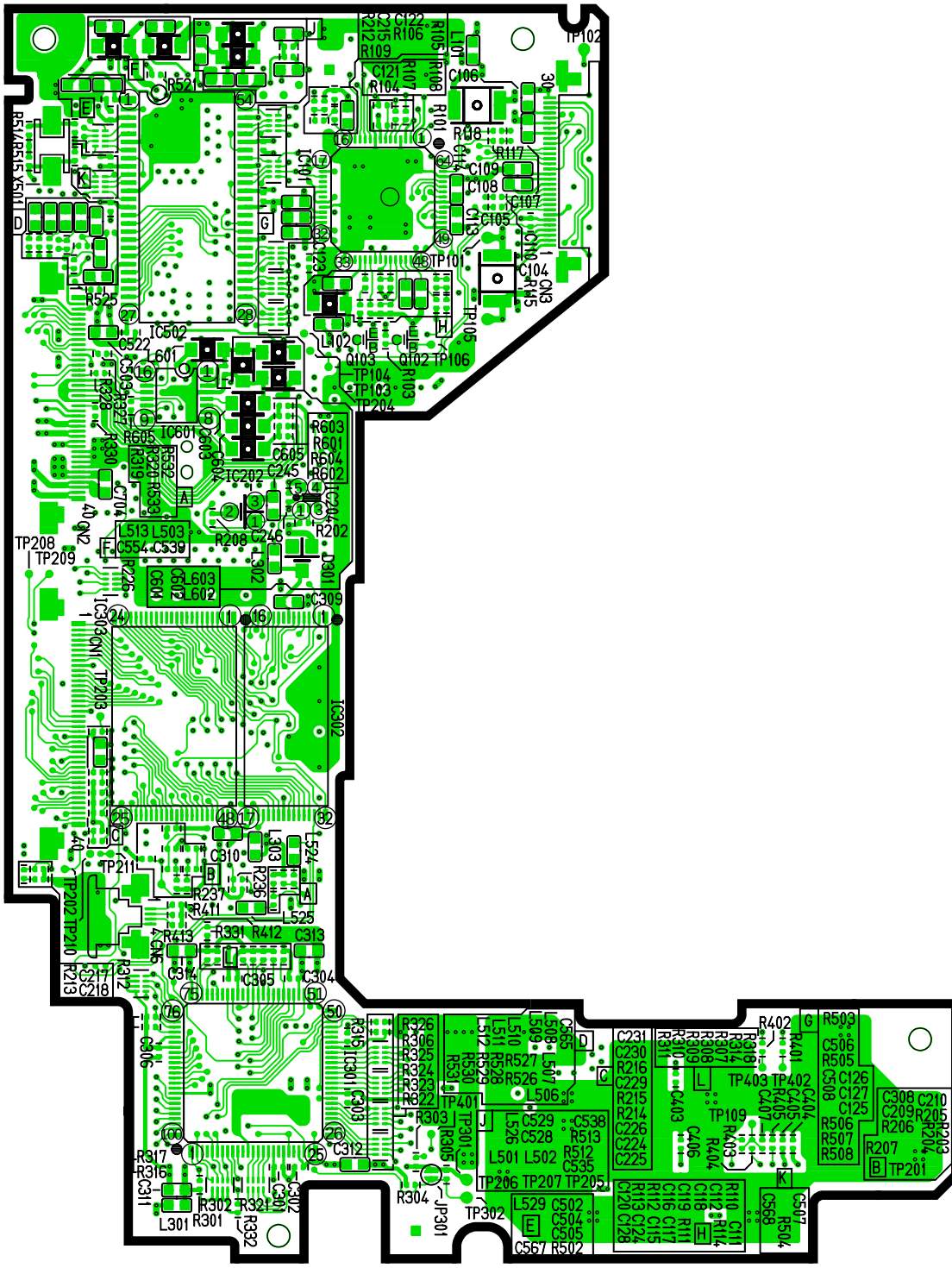

[E-9179C][Bottom View]

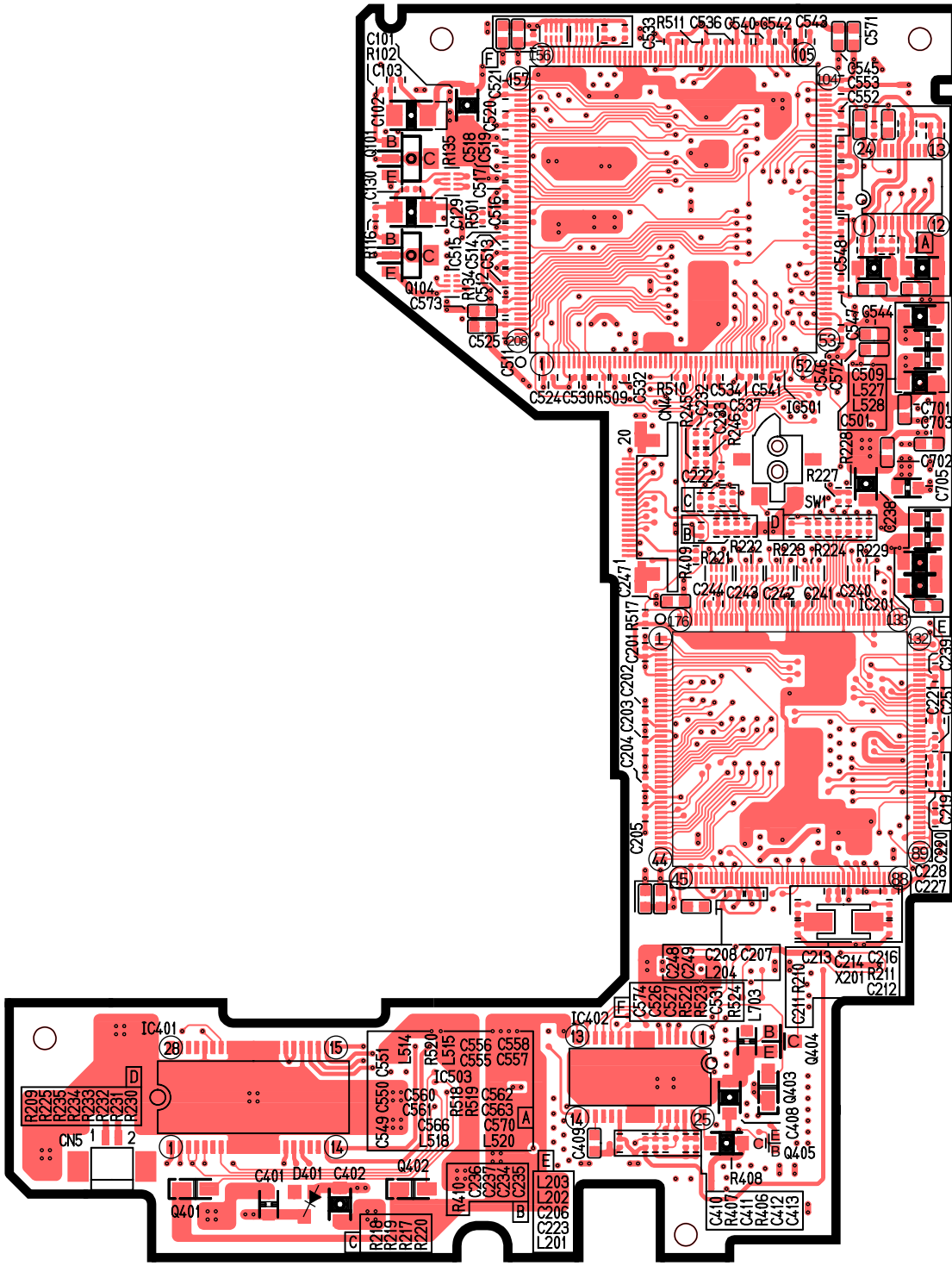

[E-9179C][Top View]

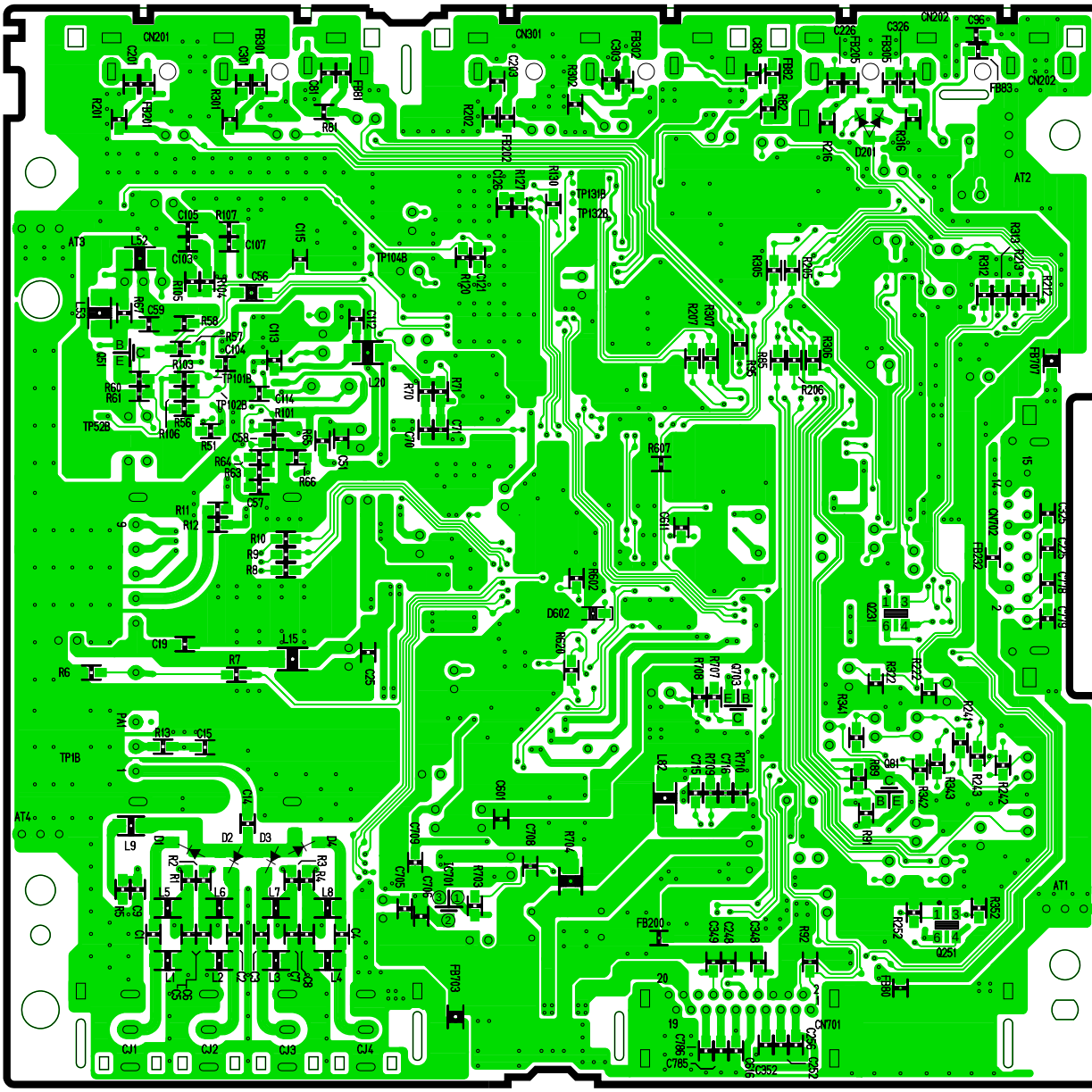

[E-9099A][Bottom View]

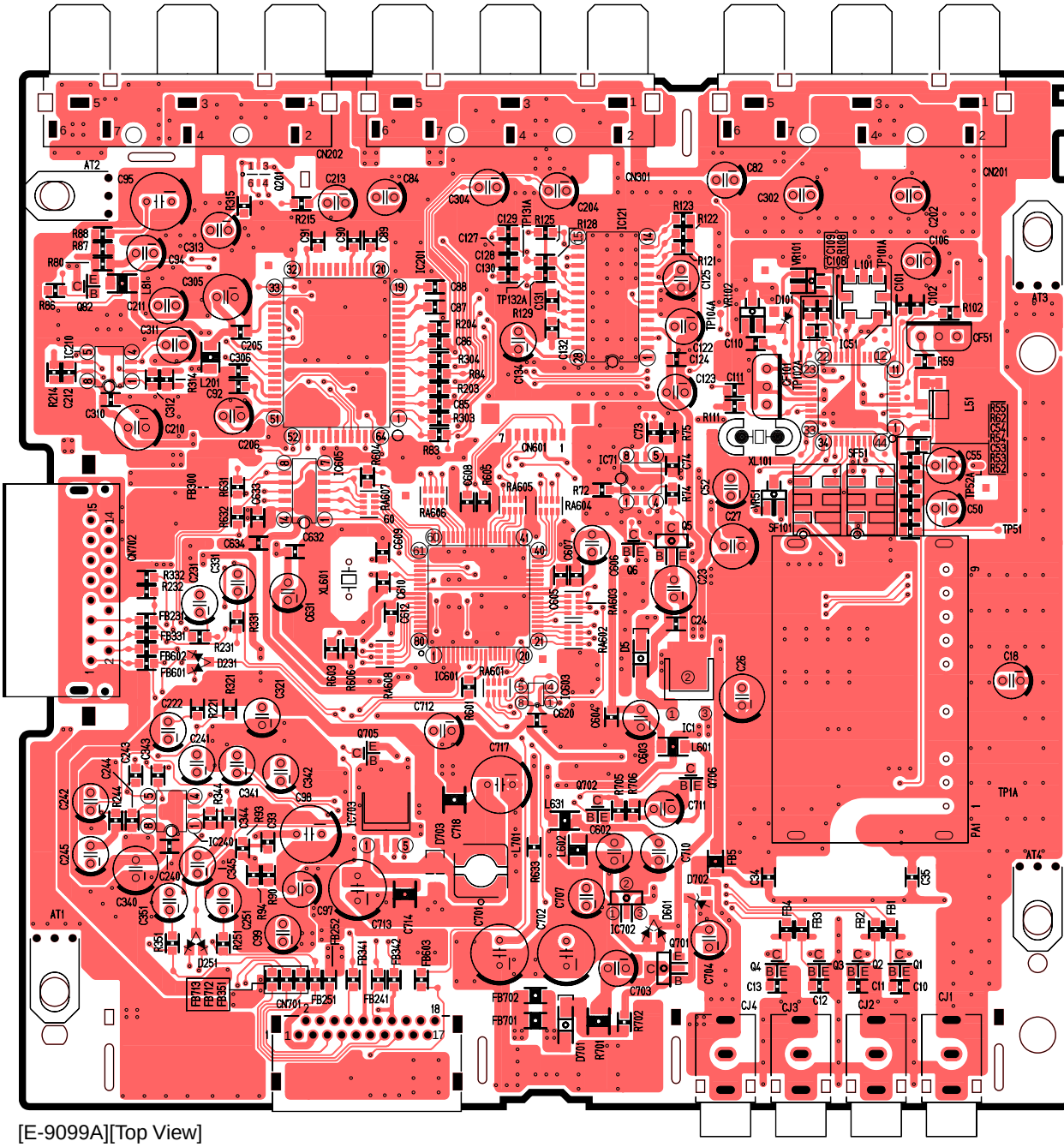

[E-9099A][Top View]

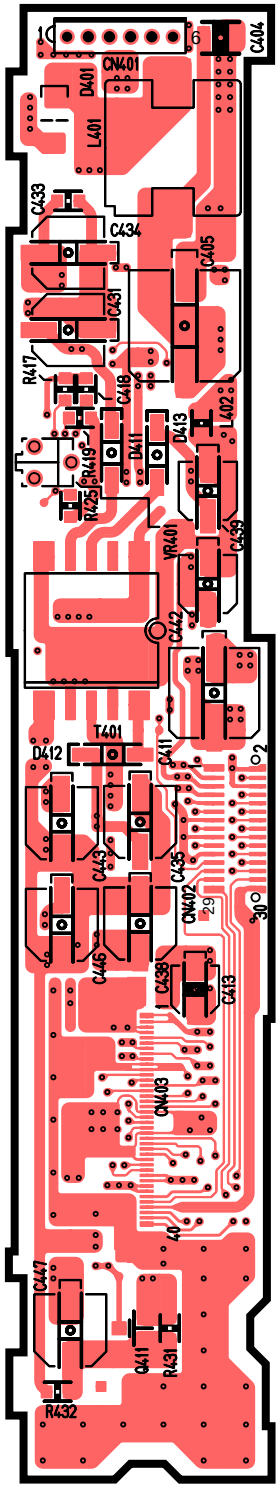

[E-9146Bb] [Top View]

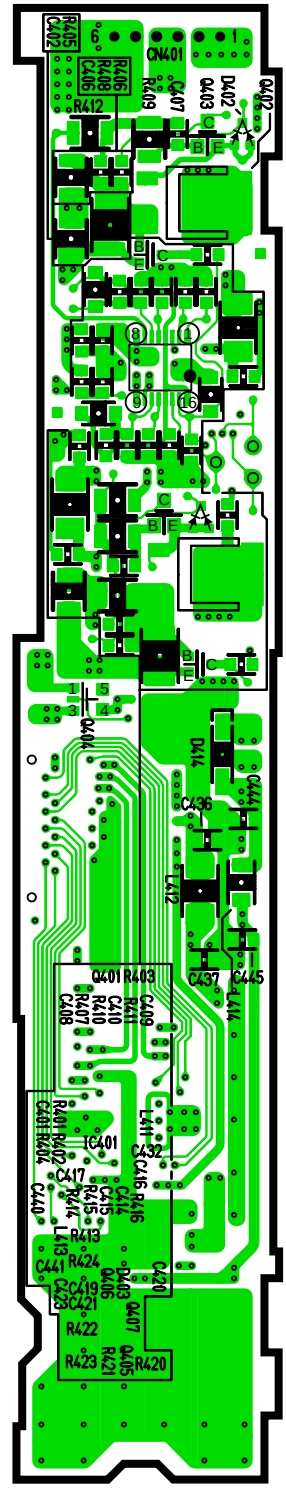

[E-9146Bb] [Bottom View]

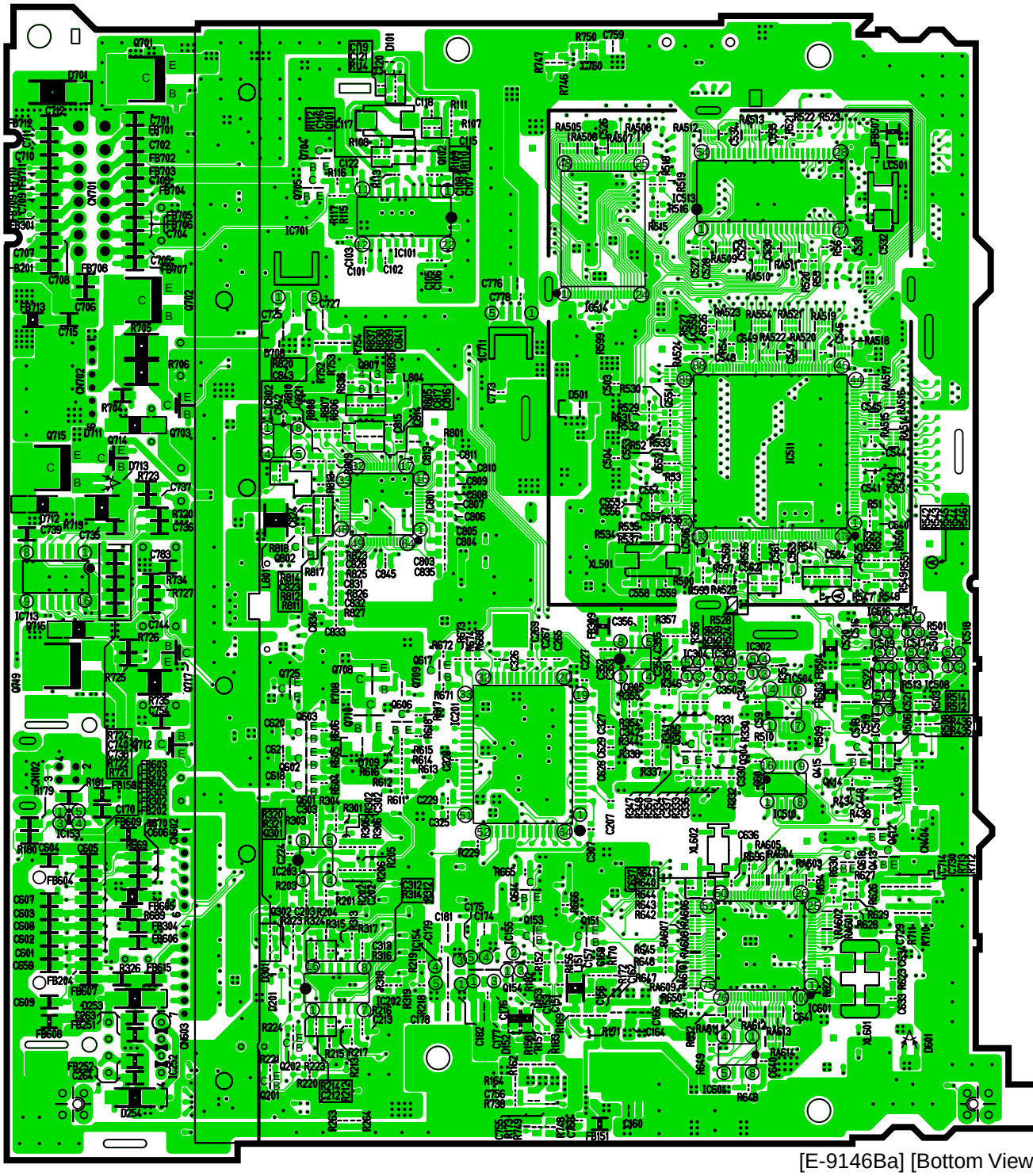

[E-9146Ba] [Bottom View]

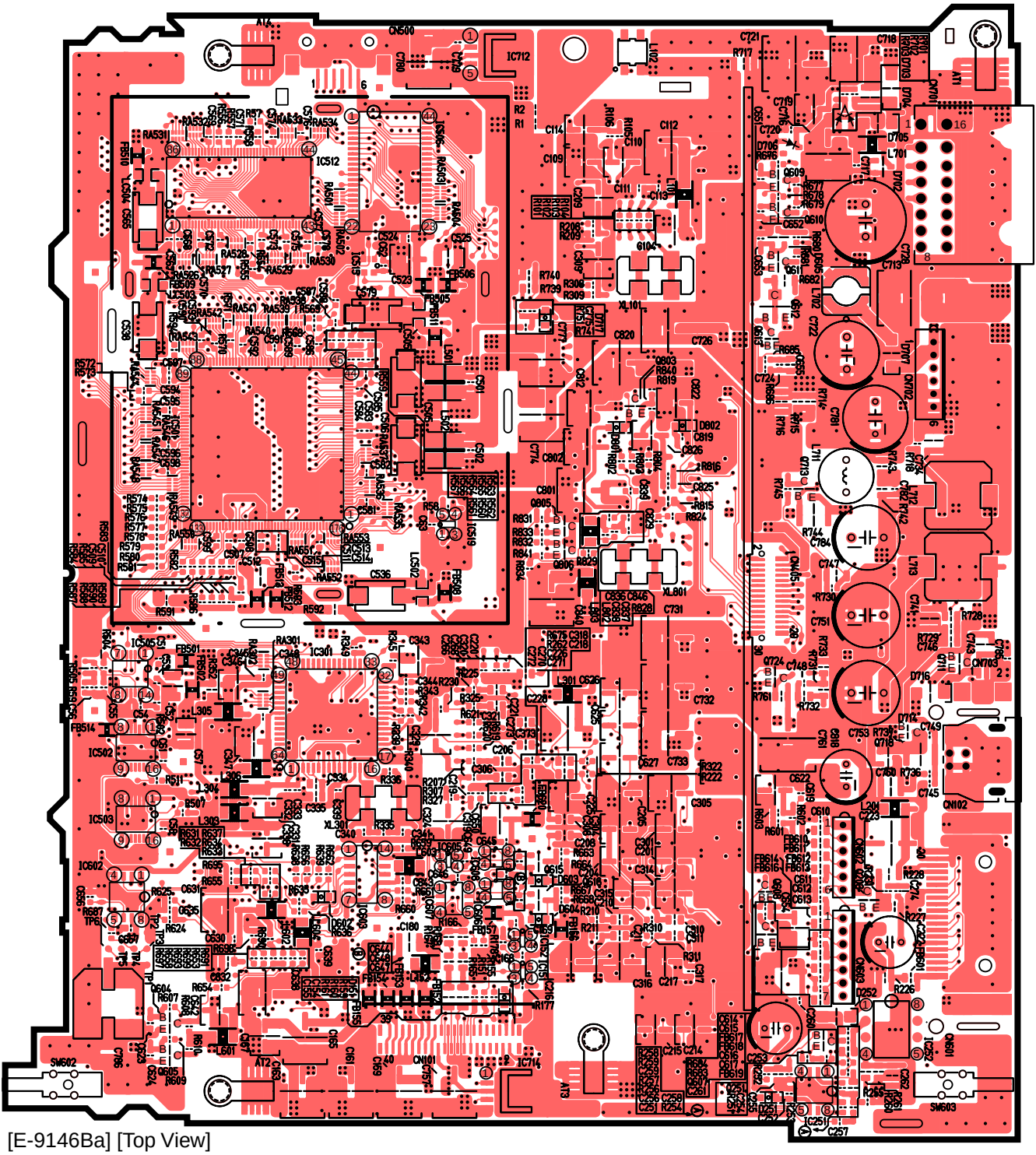

[E-9146Ba] [Top View]

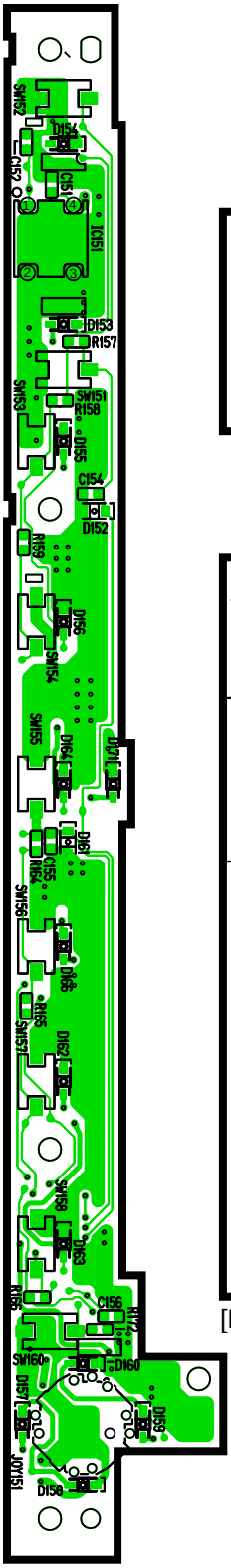

[E-9145Ab]
[Bottom View]

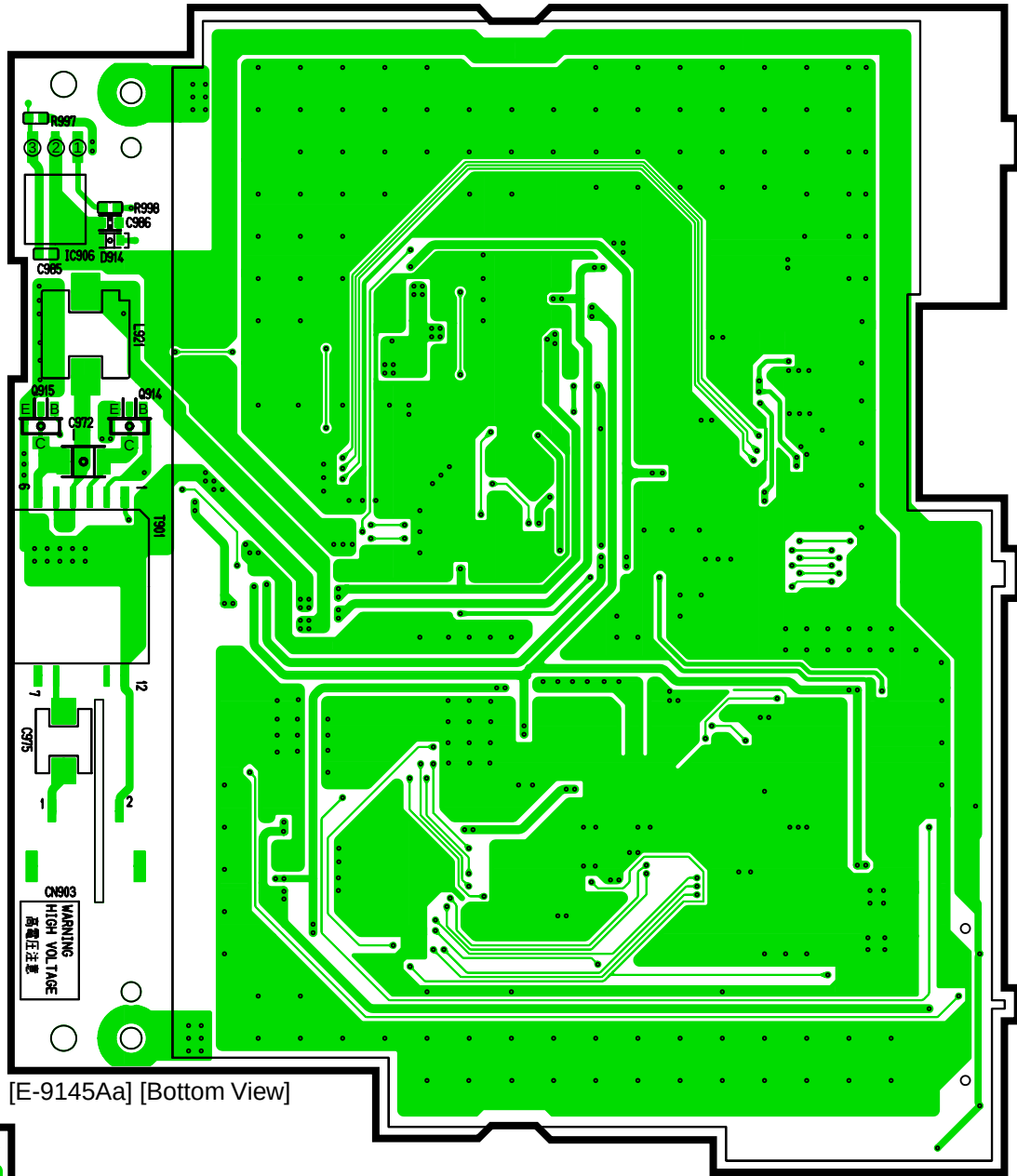

[E-9145Aa] [Bottom View]

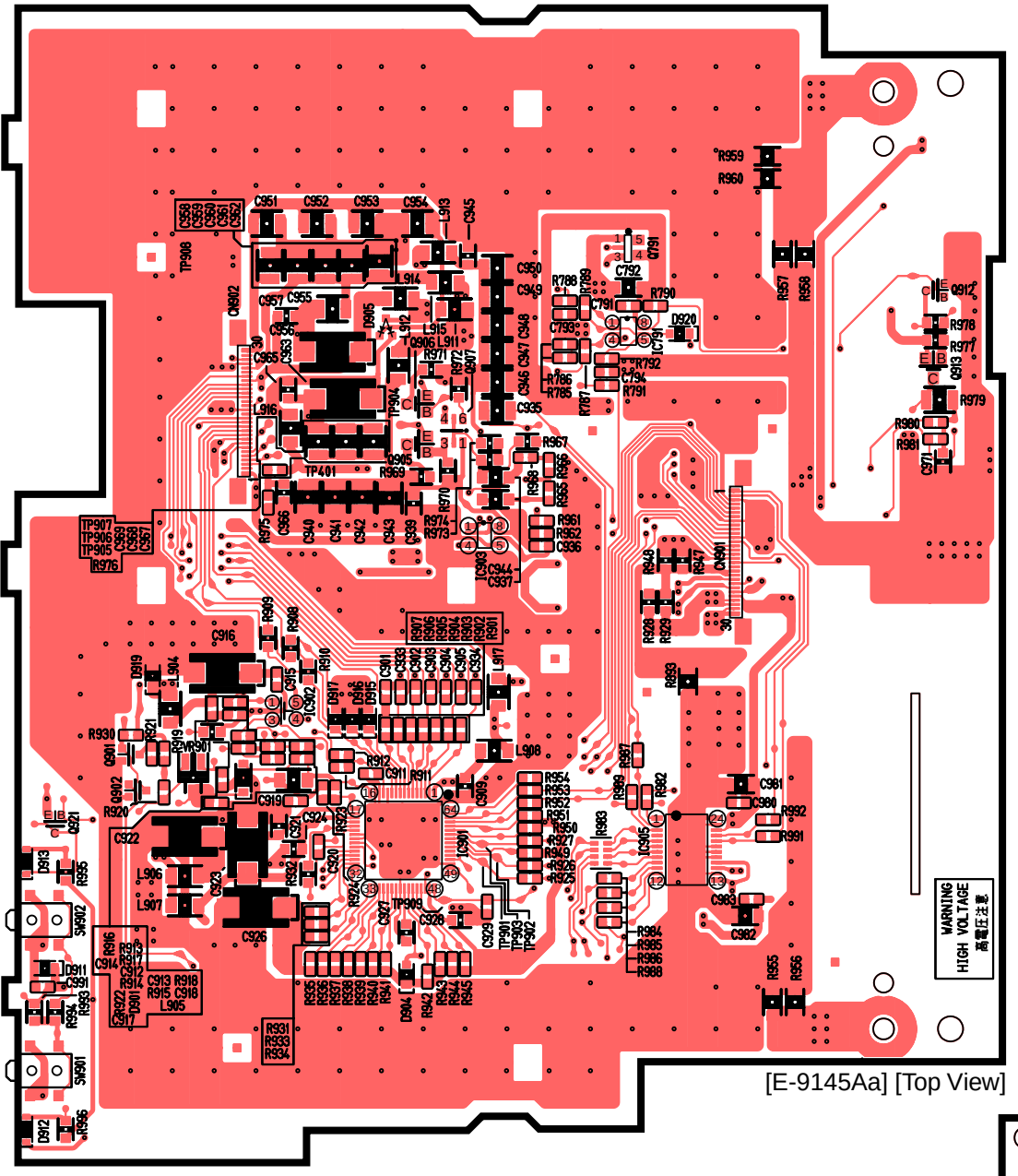

[E-9145Aa] [Top View]

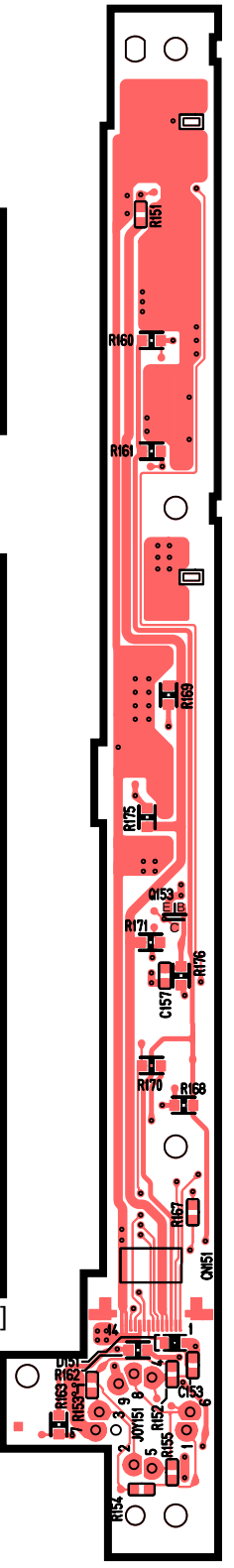

[E-9145Ab]
[Top View]