ASPECT
TILT
Panasonic
CQ-VA7501N
DISC
TUNER
BAND
INFORMATION
PTY
PROGRAM
MODE
MENU
ENTER
PRESET / DISC
TRACK
TUNE

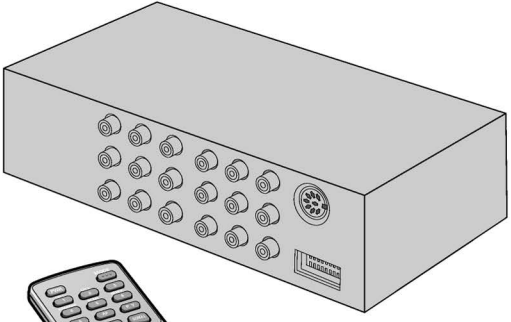

Panasonic
CQ-RX1

■ Display Unit

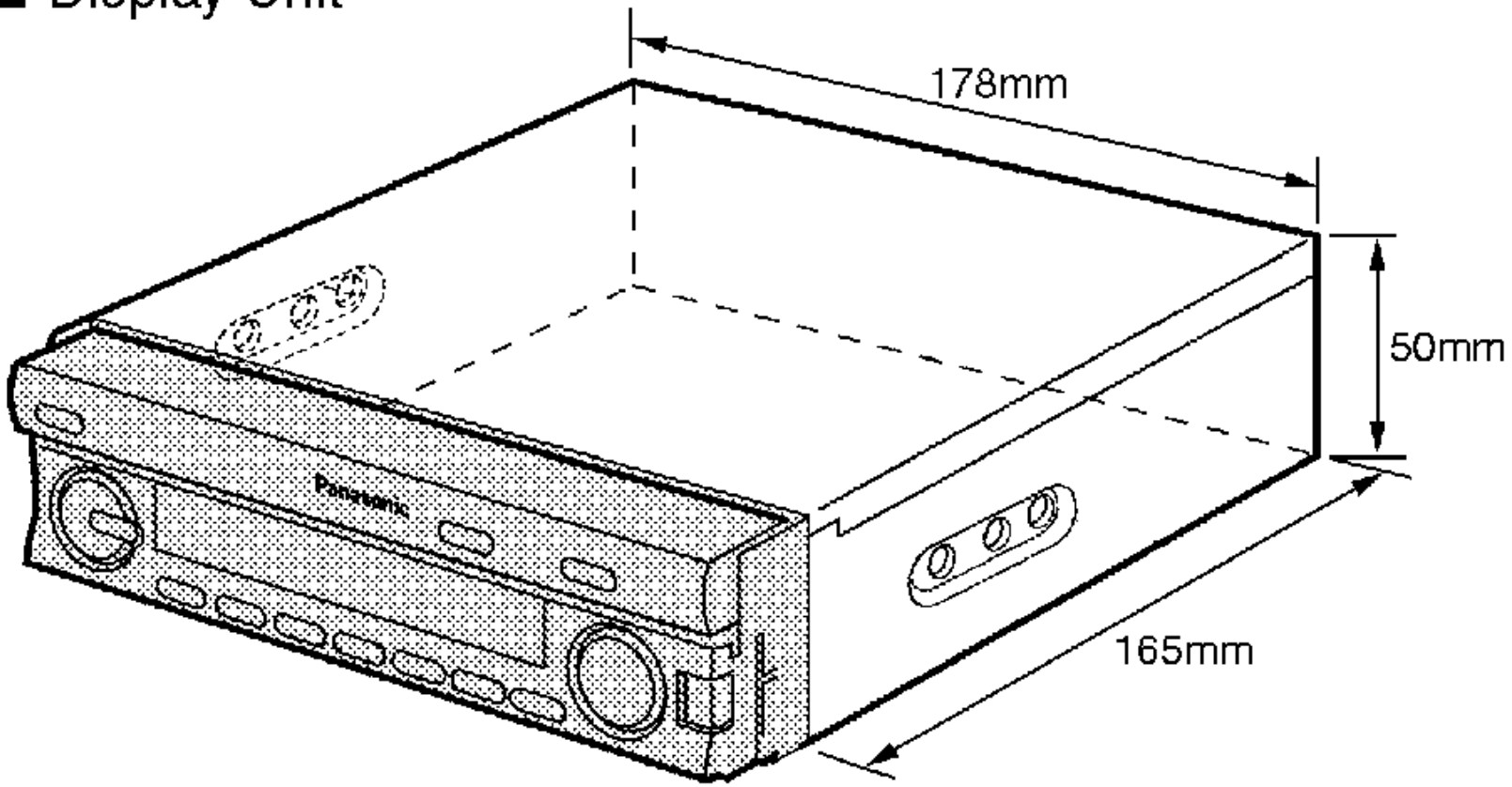

■ Hide-away Unit

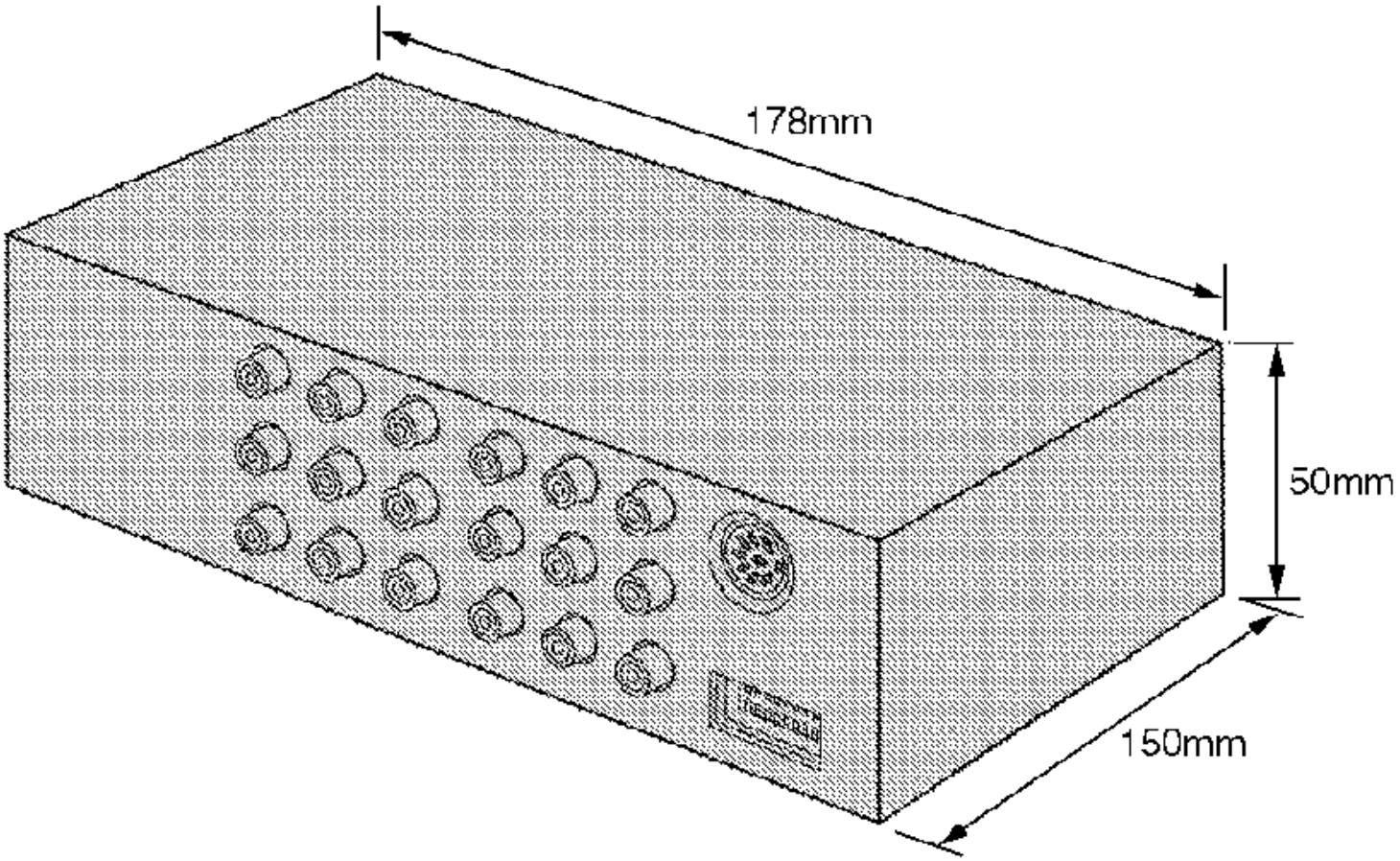

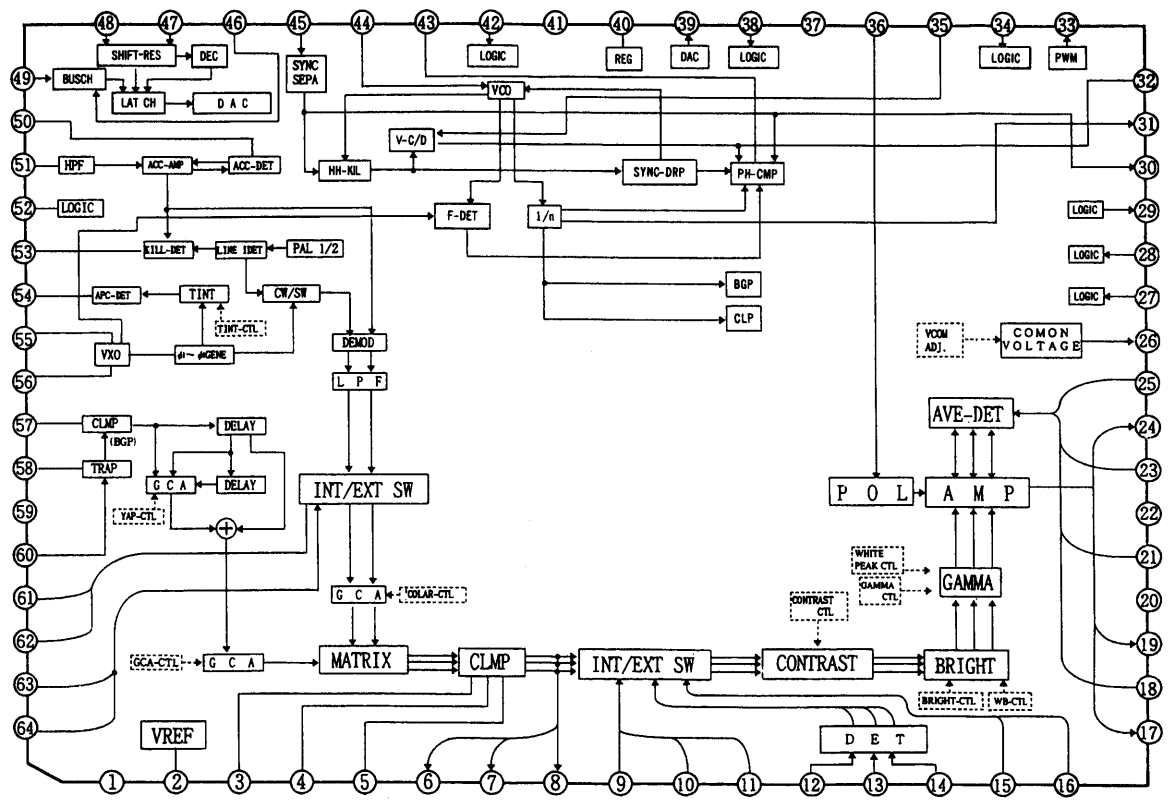
SHIFT-RES
DEC
BUSCH
LAT CH
D A C
SYNC SEPA
LOGIC
REG
DAC
LOGIC
LOGIC
PWM
VCO
V-C/D
HPF
ACC-AMP
ACC-DET
HH-KIL
SYNC-DRP
PH-CMP
LOGIC
F-DET
1/n
LOGIC
KILL-DET
LINE DET
PAL 1/2
LOGIC
LOGIC
APC-DET
TINT
CW/SW
BGP
TINT-CTL
CLP
VXO
φ1~ φ6GENE
DEMOD
VCOM ADJ.
COMON VOLTAGE
L P F
AVE-DET
CLMP
(BGP)
DELAY
TRAP
G C A
DELAY
INT/EXT SW
P O L
A M P
YAP-CTL
WHITE PEAK CTL
GAMMA CTL
GAMMA
G C A
COLAR-CTL
CONTRAST CTL
GCA-CTL
G C A
MATRIX
CLMP
INT/EXT SW
CONTRAST
BRIGHT
BRIGHT-CTL
WB-CTL
VREF
D E T

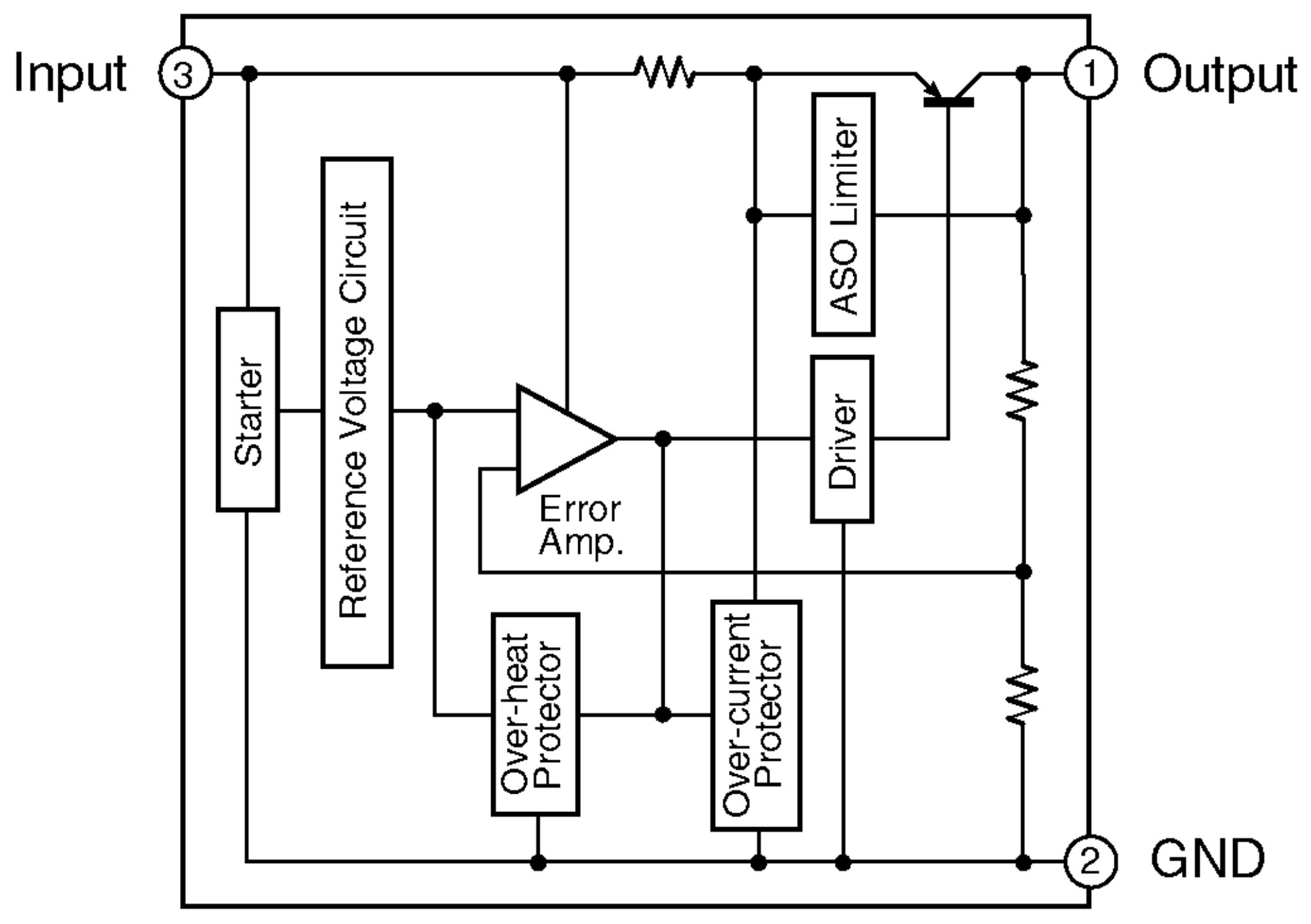
Input
3
1
Output
Starter
Reference Voltage Circuit
Error
Amp.
ASO Limiter
Driver
Over-heat
Protector
Over-current
Protector
2
GND

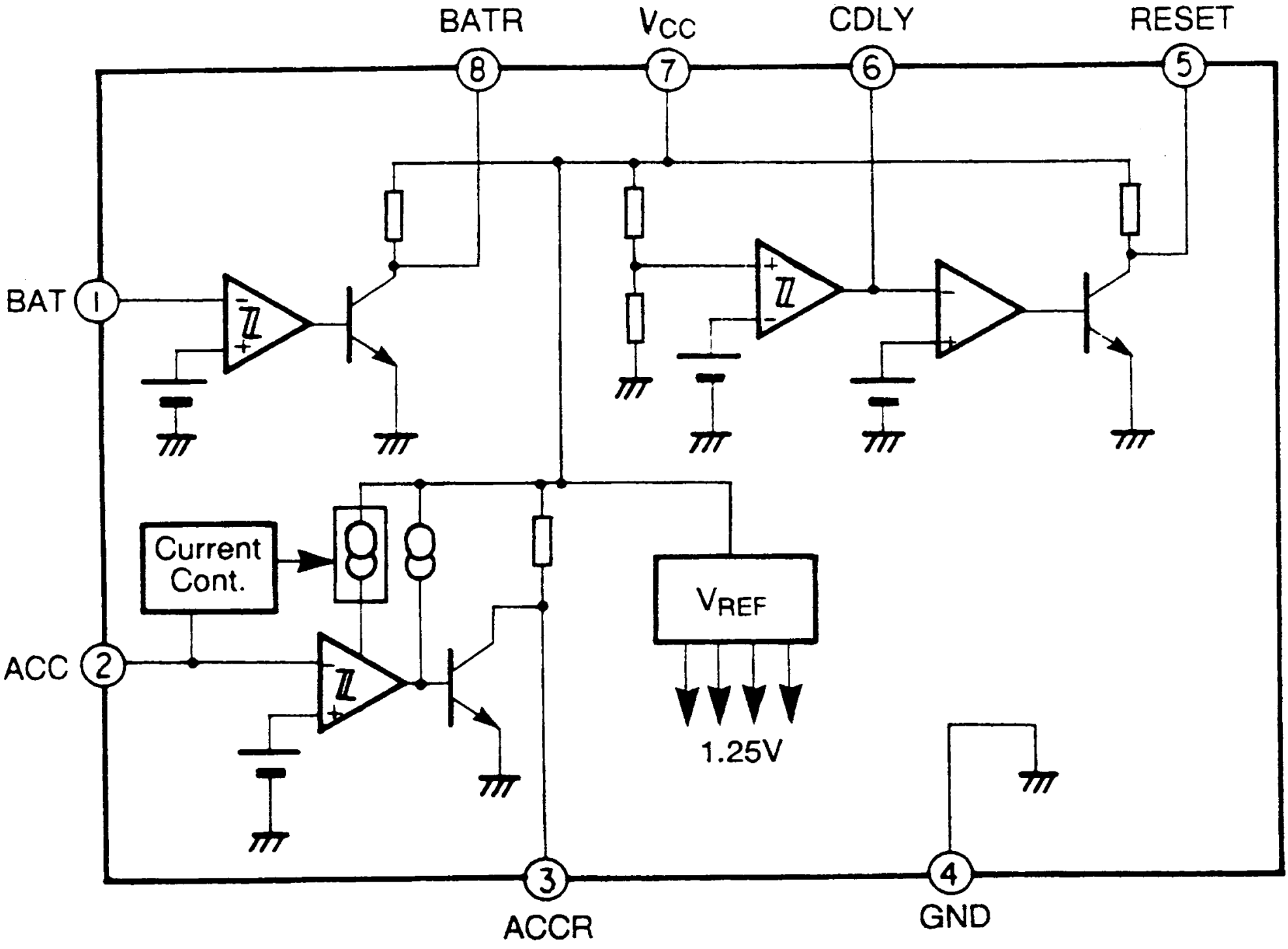
BATR
VCC
CDLY
RESET
8
7
6
5
BAT
1
Current Cont.
VREF
ACC
2
1.25V
3
ACCR
4
GND

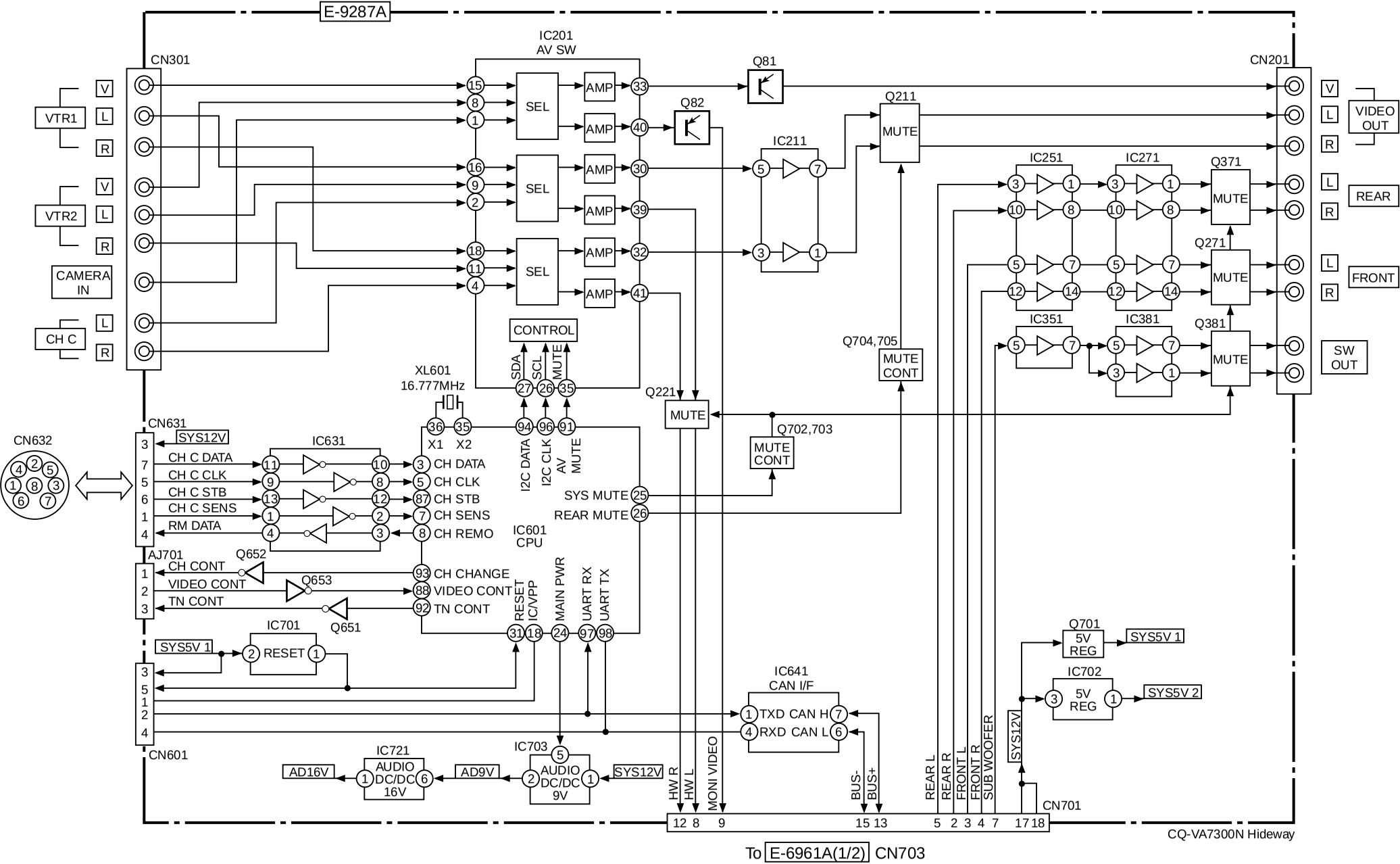
E-9287A
CN301
VTR1
VTR2
CAMERA IN
CH C
V
L
R
IC201
AV SW
SEL
AMP
Q81
Q82
IC211
Q211
MUTE
CN201
VIDEO OUT
REAR
FRONT
SW OUT
IC251
IC271
Q371
Q271
Q381
IC351
IC381
Q704,705
MUTE CONT
Q702,703
CONTROL
SDA
SCL
MUTE
XL601
16.777MHz
X1
X2
Q221
CN632
CN631
SYS12V
IC631
CH C DATA
CH C CLK
CH C STB
CH C SENS
RM DATA
CH DATA
CH CLK
CH STB
CH SENS
CH REMO
I2C DATA
I2C CLK
AV MUTE
SYS MUTE
REAR MUTE
IC601
CPU
AJ701
CH CONT
VIDEO CONT
TN CONT
Q652
Q653
Q651
CH CHANGE
RESET
IC/VPP
MAIN PWR
UART RX
UART TX
IC701
RESET
SYS5V 1
CN601
IC641
CAN I/F
TXD CAN H
RXD CAN L
Q701
5V REG
SYS5V 1
IC702
5V REG
SYS5V 2
IC721
AUDIO DC/DC 16V
AD16V
AD9V
IC703
AUDIO DC/DC 9V
SYS12V
HW R
HW L
MONI VIDEO
BUS-
BUS+
REAR L
REAR R
FRONT L
FRONT R
SUB WOOFER
CN701
To E-6961A(1/2) CN703
CQ-VA7300N Hideway

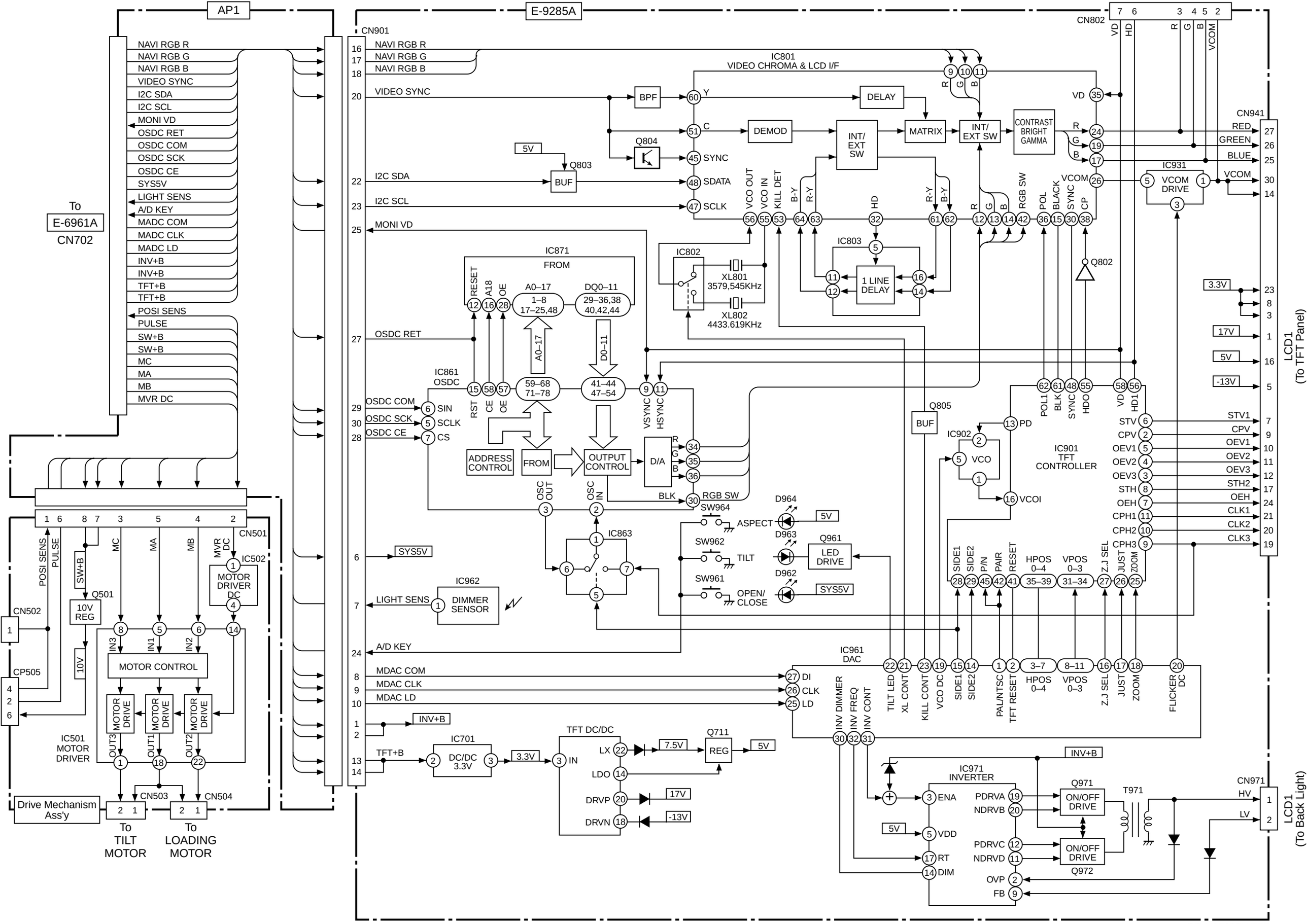
AP1
E-9285A
To
E-6961A
CN702
CN901
NAVI RGB R
NAVI RGB G
NAVI RGB B
VIDEO SYNC
I2C SDA
I2C SCL
MONI VD
OSDC RET
OSDC COM
OSDC SCK
OSDC CE
SYS5V
LIGHT SENS
A/D KEY
MADC COM
MADC CLK
MADC LD
INV+B
TFT+B
POSI SENS
PULSE
SW+B
MC
MA
MB
MVR DC
IC801
VIDEO CHROMA & LCD I/F
BPF
DELAY
DEMOD
INT/ EXT SW
MATRIX
CONTRAST BRIGHT GAMMA
Q804
Q803
BUF
IC871
FROM
IC802
XL801
3579,545KHz
XL802
4433.619KHz
IC803
1 LINE DELAY
Q802
IC861
OSDC
ADDRESS CONTROL
OUTPUT CONTROL
D/A
RGB SW
SW964
SW962
SW961
ASPECT
TILT
OPEN/ CLOSE
D964
D963
D962
Q961
LED DRIVE
IC863
IC962
DIMMER SENSOR
IC902
VCO
IC901
TFT CONTROLLER
Q805
CN802
CN941
IC931
VCOM DRIVE
LCD1
(To TFT Panel)
CN501
CN502
CP505
Q501
10V REG
IC502
MOTOR DRIVER DC
MOTOR CONTROL
MOTOR DRIVE
IC501
MOTOR DRIVER
CN503
CN504
Drive Mechanism Ass'y
To
TILT
MOTOR
To
LOADING
MOTOR
IC961
DAC
IC701
DC/DC 3.3V
TFT DC/DC
Q711
REG
IC971
INVERTER
Q971
ON/OFF DRIVE
Q972
T971
CN971
LCD1
(To Back Light)

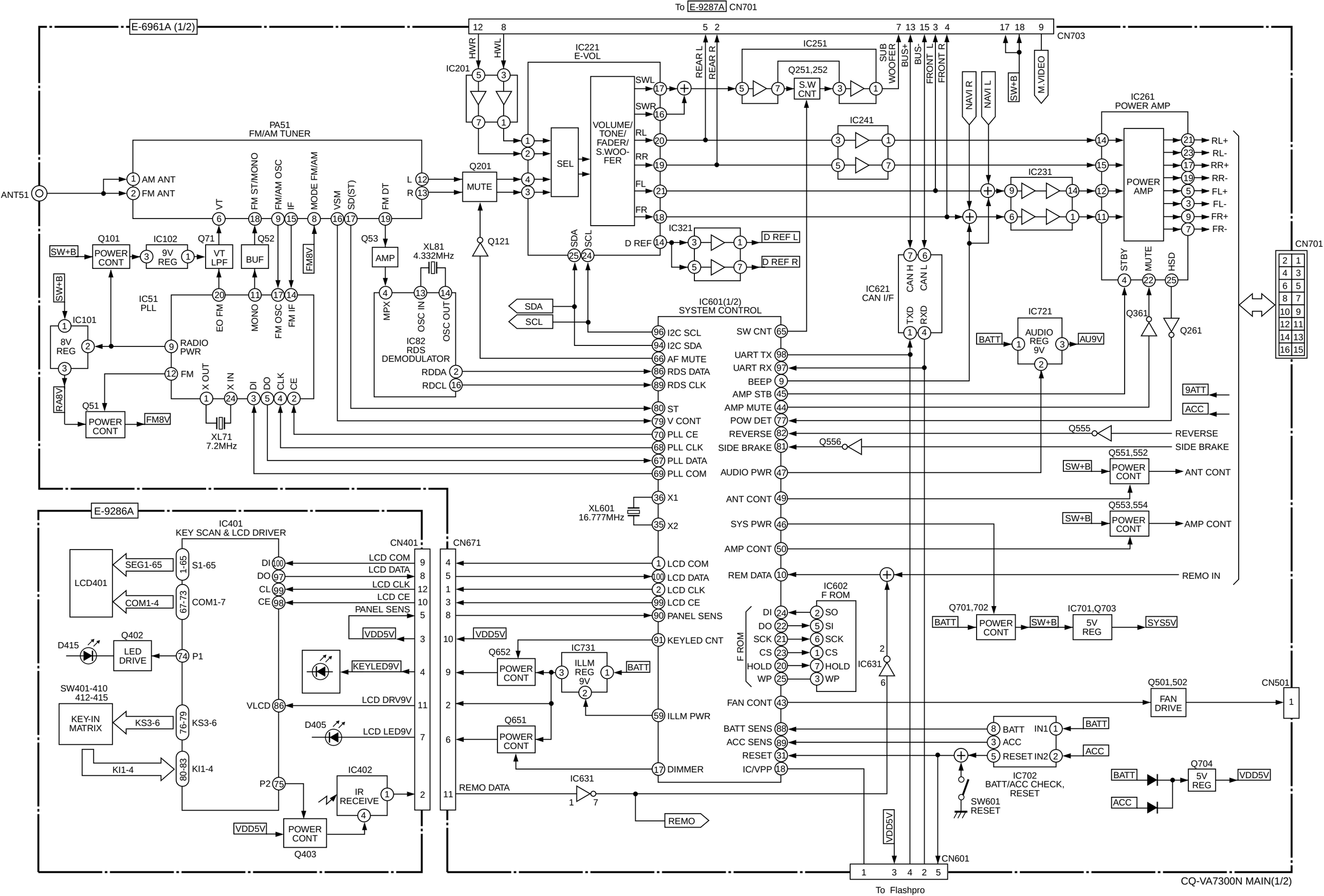
To E-9287A CN701
E-6961A (1/2)
CN703
IC221
E-VOL
IC251
Q251,252
S.W CNT
SUB WOOFER
BUS+
BUS-
FRONT L
FRONT R
REAR L
REAR R
NAVI R
NAVI L
SW+B
M.VIDEO
IC261
POWER AMP
IC241
IC231
IC201
HWR
HWL
PA51
FM/AM TUNER
ANT51
AM ANT
FM ANT
VT
FM ST/MONO
FM/AM OSC
IF
MODE FM/AM
VSM
SD(ST)
FM DT
Q201
MUTE
SEL
VOLUME/ TONE/ FADER/ S.WOO-FER
SWL
SWR
RL
RR
FL
FR
D REF
IC321
D REF L
D REF R
RL+
RL-
RR+
RR-
FL+
FL-
FR+
FR-
Q101
POWER CONT
IC102
9V REG
Q71
VT LPF
Q52
BUF
FM8V
Q53
AMP
XL81
4.332MHz
Q121
SDA
SCL
IC51
PLL
IC101
8V REG
RA8V
Q51
POWER CONT
FM8V
XL71
7.2MHz
EO FM
MONO
FM OSC
FM IF
RADIO PWR
FM
X OUT
X IN
DI
DO
CLK
CE
MPX
OSC IN
OSC OUT
IC82
RDS DEMODULATOR
RDDA
RDCL
IC601(1/2)
SYSTEM CONTROL
I2C SCL
I2C SDA
AF MUTE
RDS DATA
RDS CLK
ST
V CONT
PLL CE
PLL CLK
PLL DATA
PLL COM
X1
X2
XL601
16.777MHz
LCD COM
LCD DATA
LCD CLK
LCD CE
PANEL SENS
KEYLED CNT
ILLM PWR
DIMMER
REMO DATA
REMO
SW CNT
UART TX
UART RX
BEEP
AMP STB
AMP MUTE
POW DET
REVERSE
SIDE BRAKE
AUDIO PWR
ANT CONT
SYS PWR
AMP CONT
REM DATA
FAN CONT
BATT SENS
ACC SENS
RESET
IC/VPP
IC621
CAN I/F
CAN H
CAN L
TXD
RXD
IC721
AUDIO REG 9V
BATT
AU9V
Q361
Q261
STBY
MUTE
HSD
9ATT
ACC
Q555
REVERSE
Q556
SIDE BRAKE
Q551,552
POWER CONT
ANT CONT
Q553,554
POWER CONT
AMP CONT
REMO IN
IC602
F ROM
SO
SI
SCK
CS
HOLD
WP
IC631
Q701,702
POWER CONT
IC701,Q703
5V REG
SYS5V
Q501,502
FAN DRIVE
CN501
IC702
BATT/ACC CHECK, RESET
IN1
IN2
SW601
RESET
Q704
5V REG
VDD5V
CN601
To Flashpro
CN701
E-9286A
IC401
KEY SCAN & LCD DRIVER
CN401
CN671
LCD401
SEG1-65
COM1-4
S1-65
COM1-7
Q402
LED DRIVE
D415
P1
SW401-410
412-415
KEY-IN MATRIX
KS3-6
KI1-4
KEYLED9V
LCD DRV9V
LCD LED9V
VLCD
D405
P2
IC402
IR RECEIVE
Q403
POWER CONT
Q652
POWER CONT
IC731
ILLM REG 9V
Q651
POWER CONT
CQ-VA7300N MAIN(1/2)

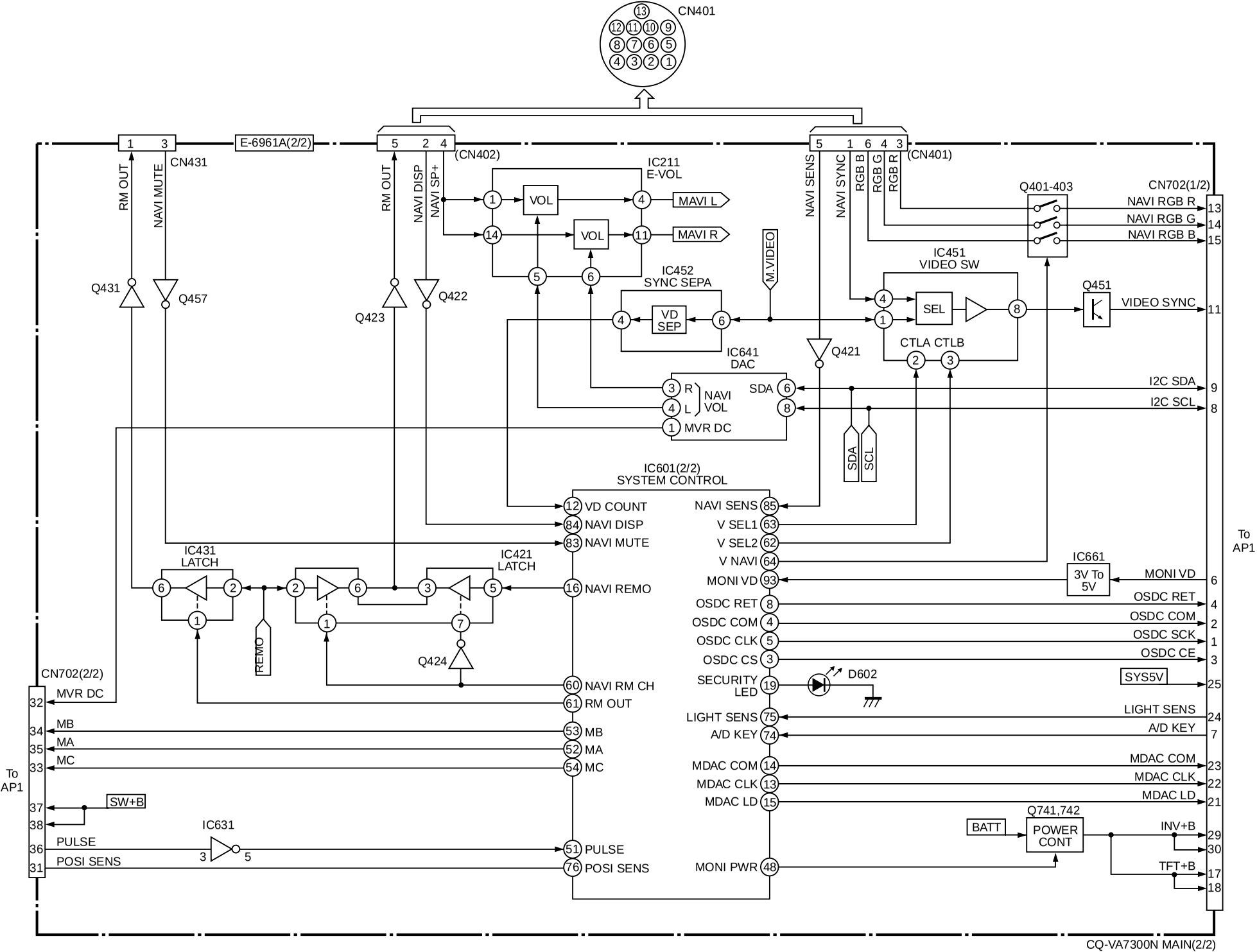
CN401
E-6961A(2/2)
CN431
(CN402)
(CN401)
RM OUT
NAVI MUTE
NAVI DISP
NAVI SP+
NAVI SENS
NAVI SYNC
RGB B
RGB G
RGB R
IC211
E-VOL
VOL
MAVI L
MAVI R
M.VIDEO
IC452
SYNC SEPA
VD SEP
IC451
VIDEO SW
SEL
CTLA CTLB
Q401-403
CN702(1/2)
NAVI RGB R
NAVI RGB G
NAVI RGB B
Q451
VIDEO SYNC
Q431
Q457
Q423
Q422
Q421
IC641
DAC
NAVI VOL
MVR DC
SDA
SCL
I2C SDA
I2C SCL
IC601(2/2)
SYSTEM CONTROL
VD COUNT
NAVI DISP
NAVI MUTE
NAVI REMO
NAVI RM CH
RM OUT
MB
MA
MC
PULSE
POSI SENS
V SEL1
V SEL2
V NAVI
MONI VD
OSDC RET
OSDC COM
OSDC CLK
OSDC CS
SECURITY LED
D602
LIGHT SENS
A/D KEY
MDAC COM
MDAC CLK
MDAC LD
MONI PWR
IC661
3V To 5V
SYS5V
IC431
LATCH
IC421
LATCH
REMO
Q424
CN702(2/2)
MVR DC
SW+B
IC631
To AP1
Q741,742
BATT
POWER CONT
INV+B
TFT+B
CQ-VA7300N MAIN(2/2)

1. Press the Release button to remove the Face Plate.

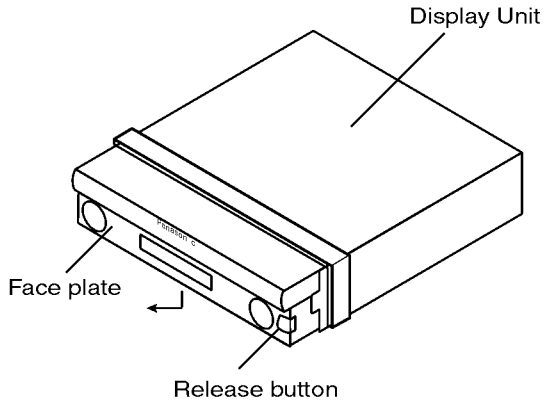

2. Remove the Trim plate by using a screw driver.

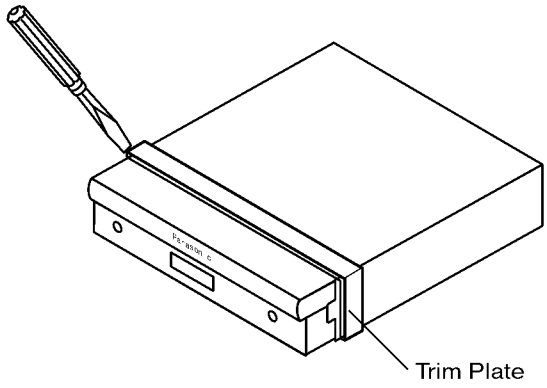

3. Remove the 2 screws (★) and 2 screws (◎).

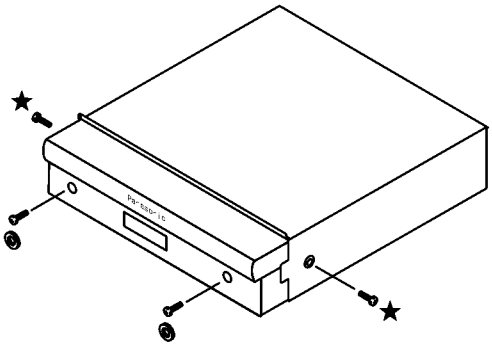

4. Unhook the claw of Clamp plate by using the screw driver to remove the Escutcheon Unit.

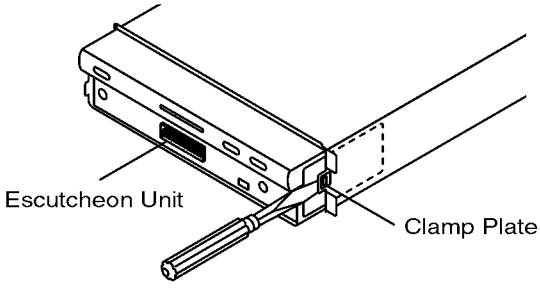

5. Pull the monitor Ass'y out of the unit.

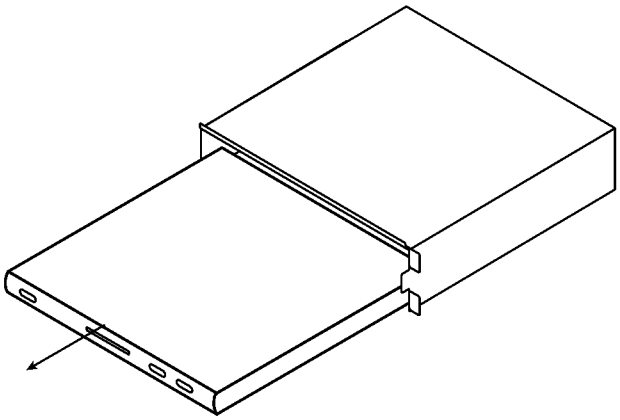

6. Remove the 5 screws (▲).

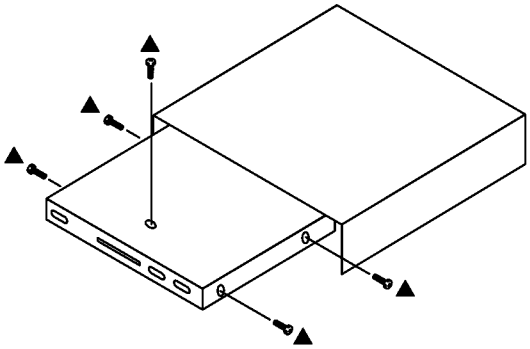

7. Open the Drive Mechanism Ass'y.

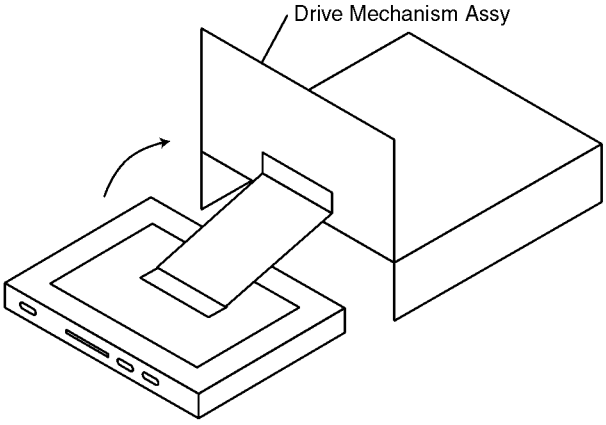

8. Disconnect the AP1(Flexible P.C.B.)from the CN901 connector on the TFT P.C.B [E-9285A].

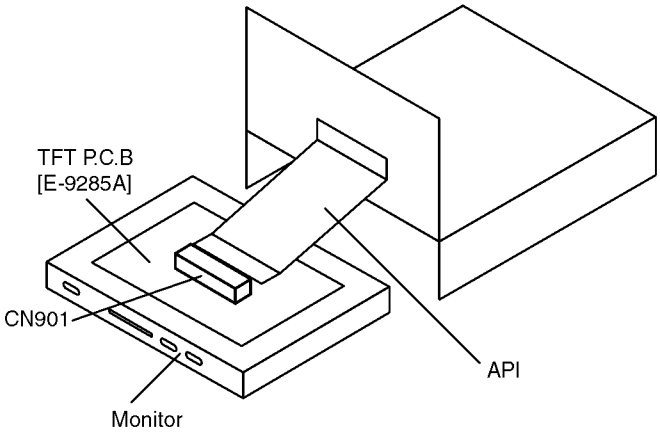

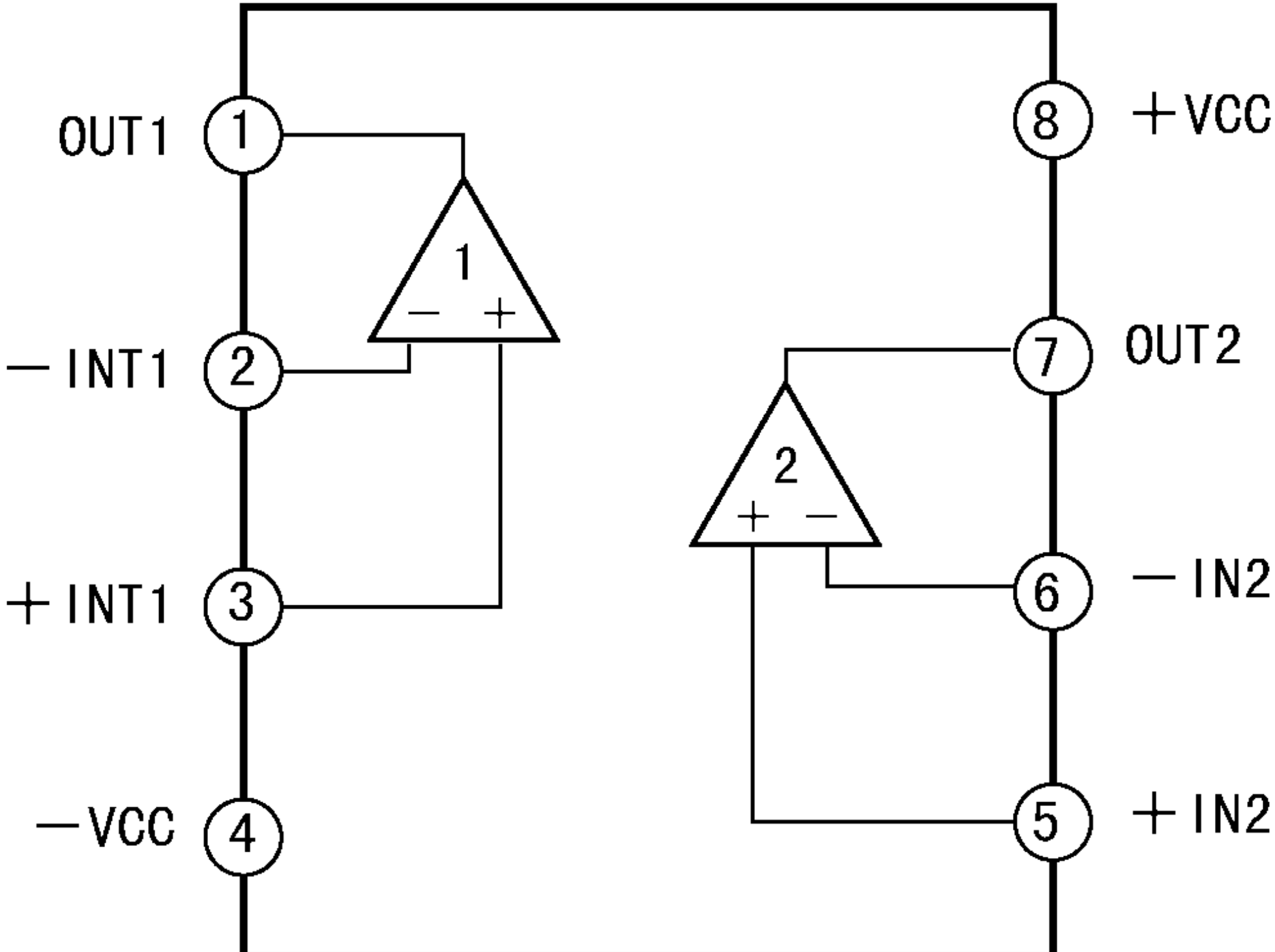
OUT1
1
−INT1
2
+INT1
3
−VCC
4
8
+VCC
7
OUT2
6
−IN2
5
+IN2
1
−
+
2
+
−

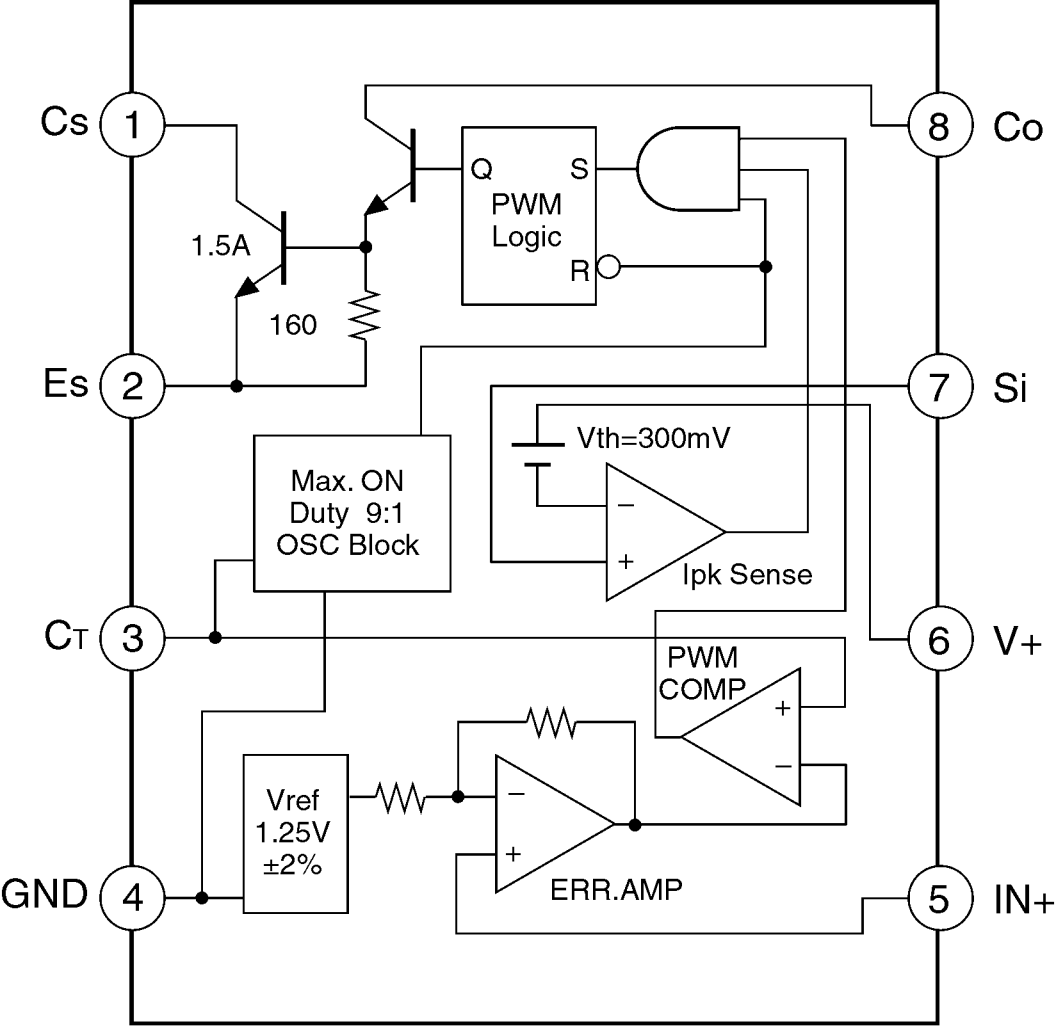
Cs
1
Es
2
CT
3
GND
4
8
Co
7
Si
6
V+
5
IN+
1.5A
160
Q
S
R
PWM
Logic
Max. ON
Duty 9:1
OSC Block
Vth=300mV
Ipk Sense
PWM
COMP
Vref
1.25V
±2%
ERR.AMP

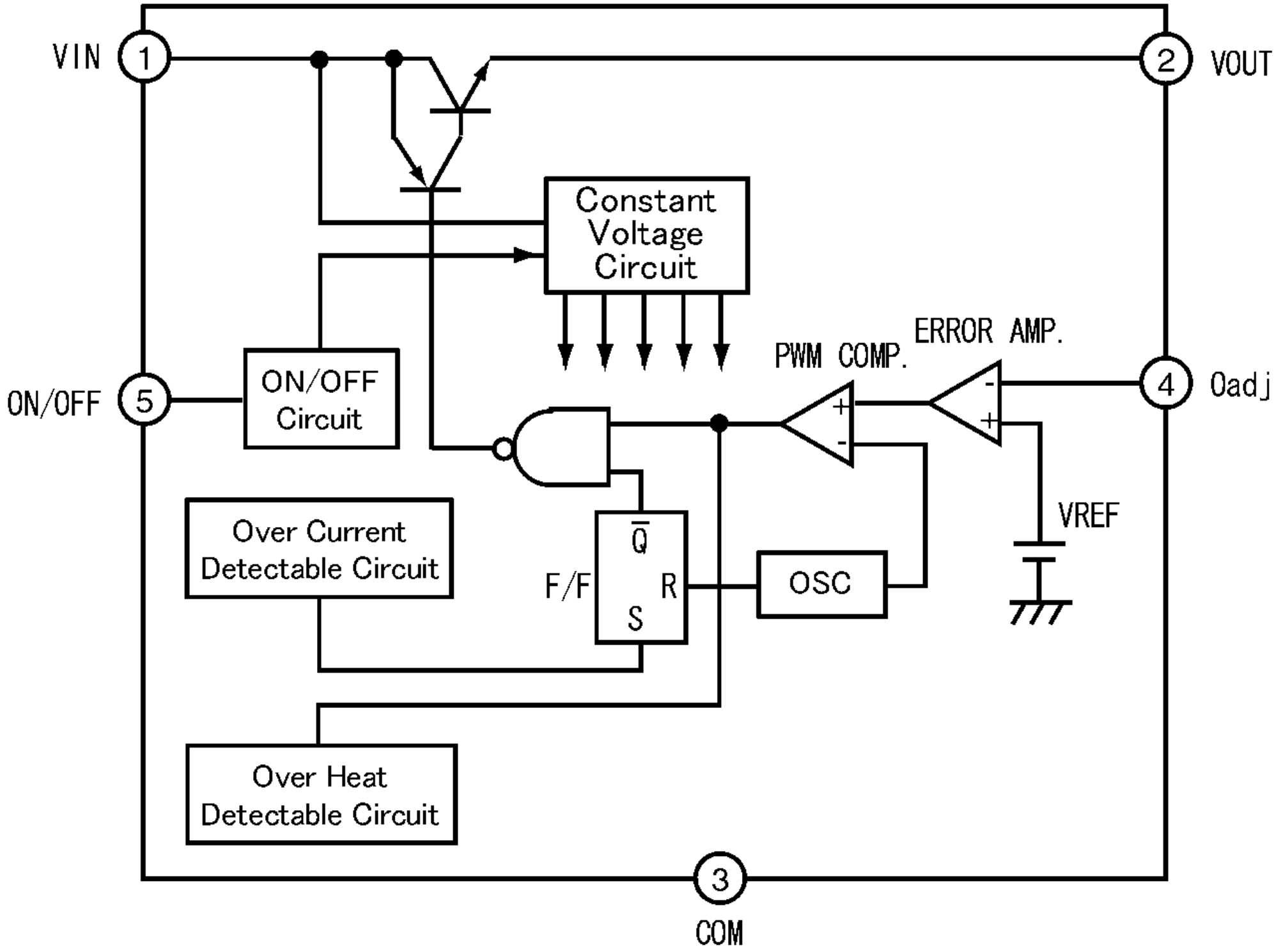
VIN
1
2
VOUT
Constant Voltage Circuit
ERROR AMP.
PWM COMP.
ON/OFF
5
ON/OFF Circuit
4
Oadj
VREF
Over Current Detectable Circuit
Q̄
F/F
R
S
OSC
Over Heat Detectable Circuit
3
COM

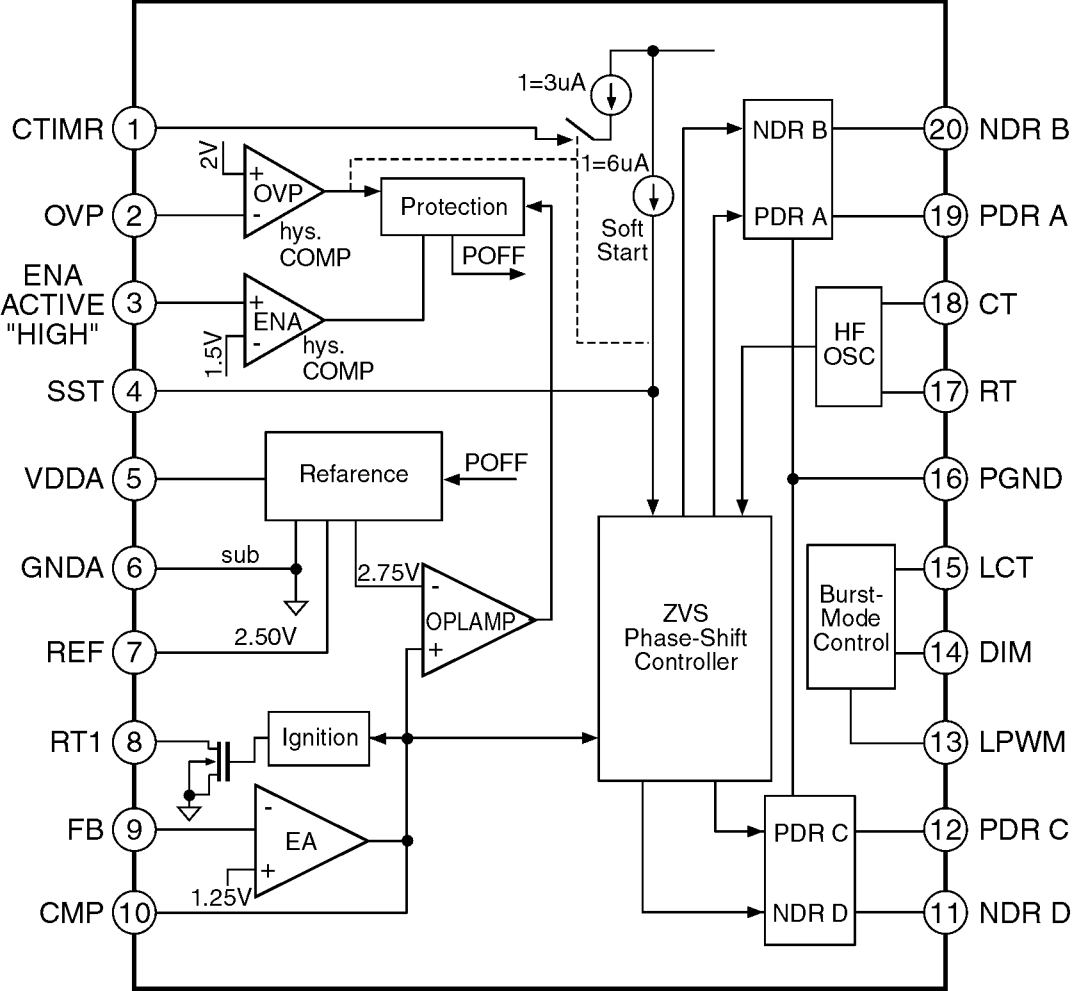
CTIMR 1
OVP 2
ENA ACTIVE "HIGH" 3
SST 4
VDDA 5
GNDA 6
REF 7
RT1 8
FB 9
CMP 10
NDR B 20
PDR A 19
CT 18
RT 17
PGND 16
LCT 15
DIM 14
LPWM 13
PDR C 12
NDR D 11
1=3uA
1=6uA
Soft Start
2V
OVP
hys. COMP
Protection
POFF
ENA
1.5V
hys. COMP
Refarence
POFF
sub
2.50V
2.75V
OPLAMP
Ignition
EA
1.25V
ZVS Phase-Shift Controller
NDR B
PDR A
HF OSC
Burst-Mode Control
PDR C
NDR D

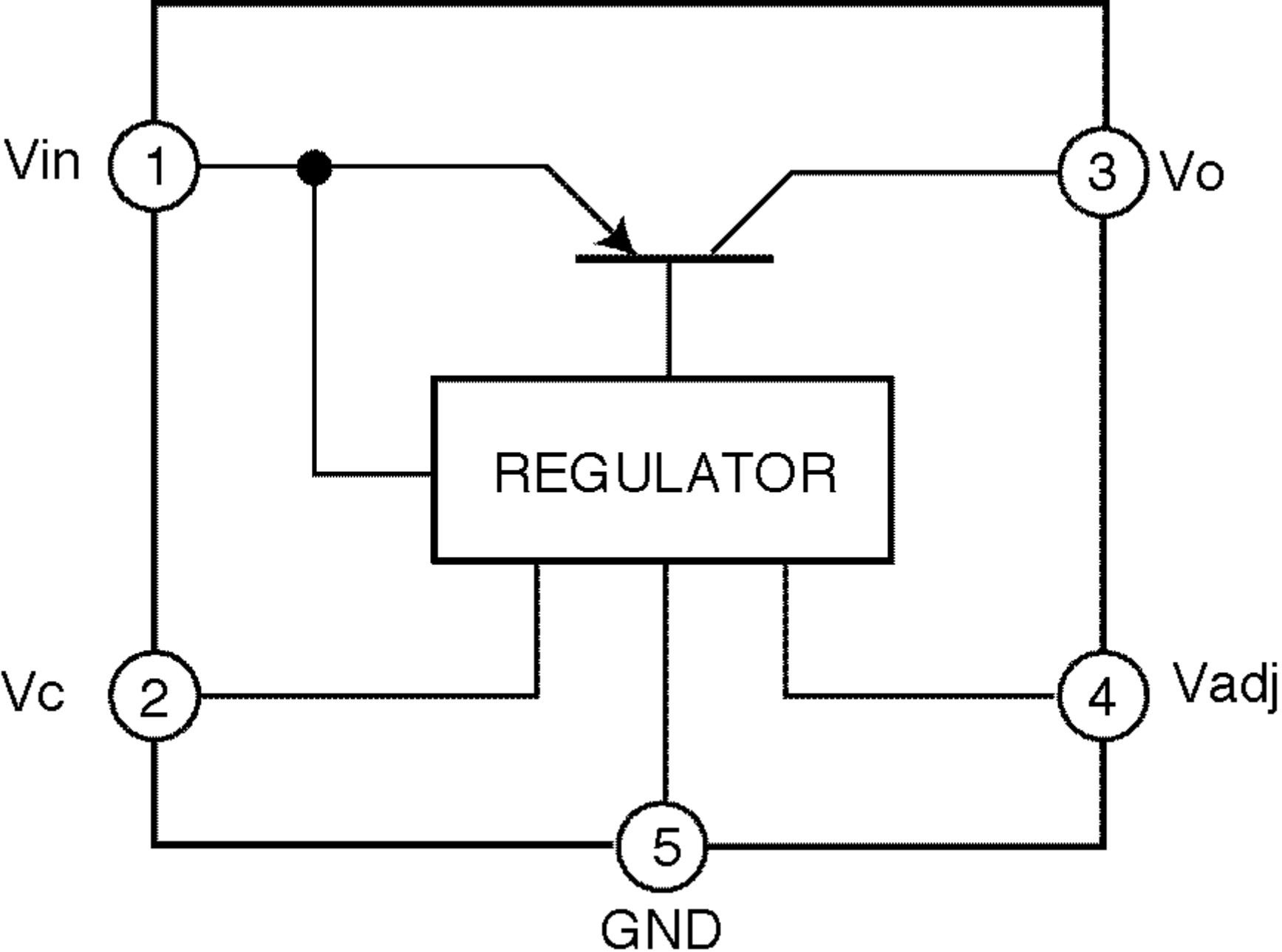
Vin
1
3
Vo
REGULATOR
Vc
2
4
Vadj
5
GND

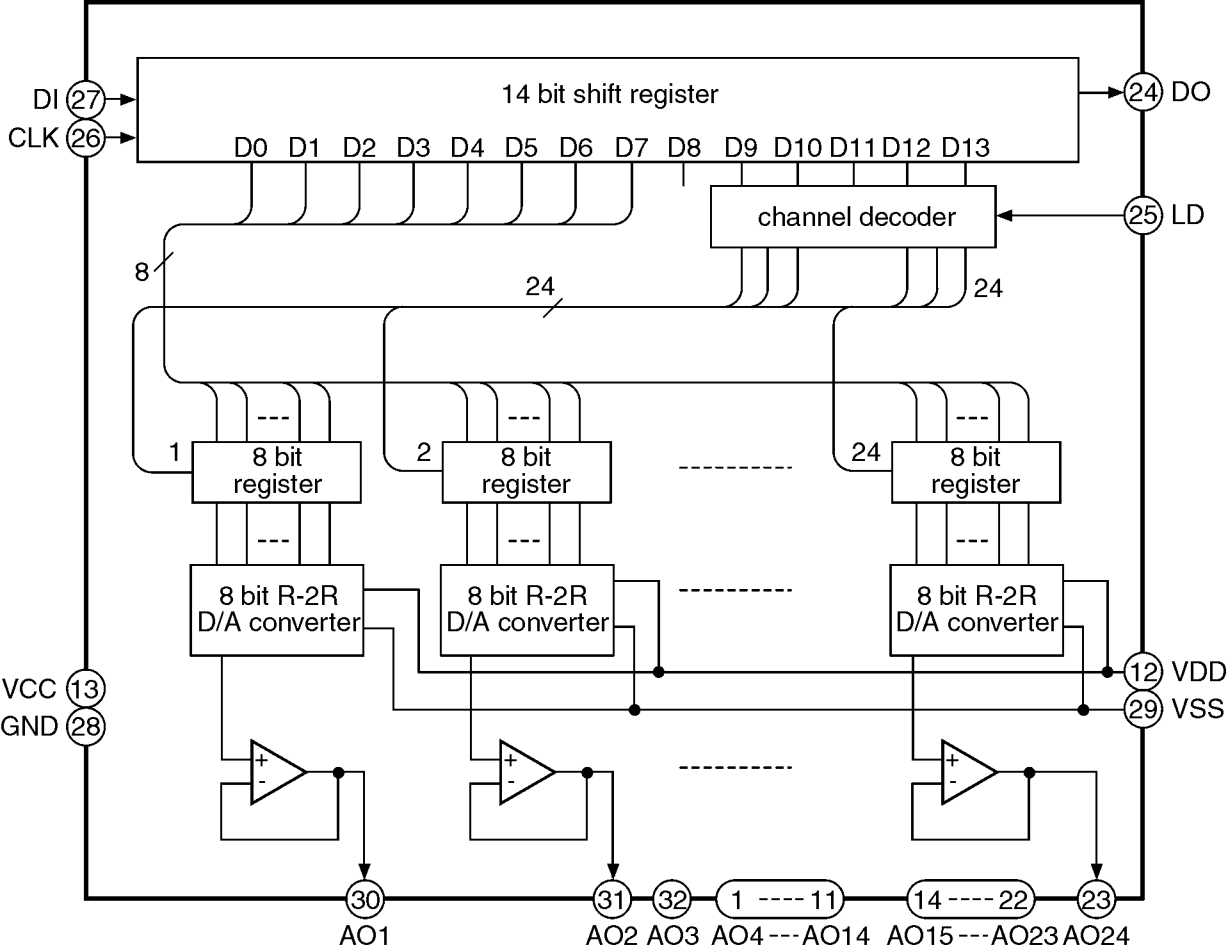
14 bit shift register
DI 27
CLK 26
24 DO
D0 D1 D2 D3 D4 D5 D6 D7 D8 D9 D10 D11 D12 D13
channel decoder
25 LD
8
24
24
1
8 bit register
2
8 bit register
24
8 bit register
8 bit R-2R D/A converter
8 bit R-2R D/A converter
8 bit R-2R D/A converter
VCC 13
GND 28
12 VDD
29 VSS
30 AO1
31 AO2
32 AO3
1 ---- 11 AO4 --- AO14
14 ---- 22 AO15 --- AO23
23 AO24

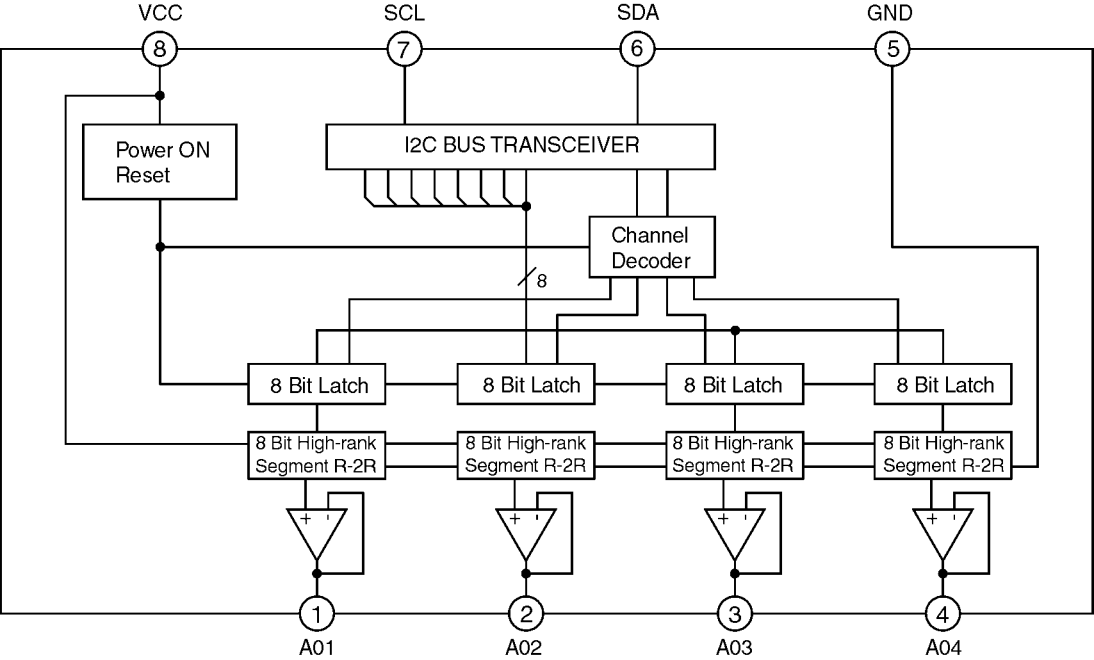
VCC
SCL
SDA
GND
8
7
6
5
Power ON Reset
I2C BUS TRANSCEIVER
Channel Decoder
8
8 Bit Latch
8 Bit Latch
8 Bit Latch
8 Bit Latch
8 Bit High-rank Segment R-2R
8 Bit High-rank Segment R-2R
8 Bit High-rank Segment R-2R
8 Bit High-rank Segment R-2R
1
2
3
4
A01
A02
A03
A04

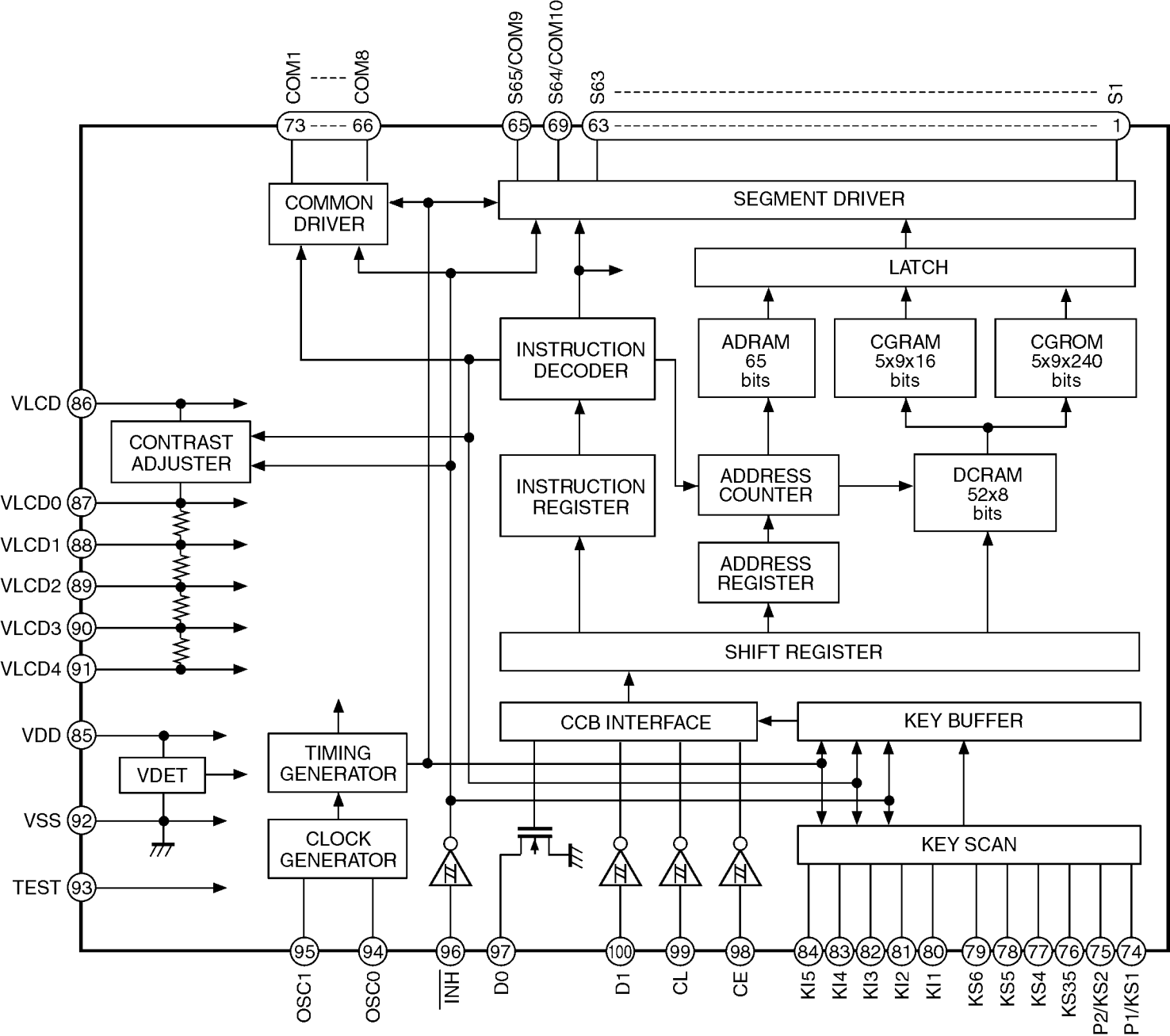
COM1
COM8
S65/COM9
S64/COM10
S63
S1
73
66
65
69
63
1
COMMON DRIVER
SEGMENT DRIVER
LATCH
INSTRUCTION DECODER
ADRAM 65 bits
CGRAM 5x9x16 bits
CGROM 5x9x240 bits
VLCD 86
CONTRAST ADJUSTER
INSTRUCTION REGISTER
ADDRESS COUNTER
DCRAM 52x8 bits
VLCD0 87
VLCD1 88
VLCD2 89
VLCD3 90
VLCD4 91
ADDRESS REGISTER
SHIFT REGISTER
CCB INTERFACE
KEY BUFFER
VDD 85
VDET
TIMING GENERATOR
VSS 92
CLOCK GENERATOR
KEY SCAN
TEST 93
95
94
96
97
100
99
98
84
83
82
81
80
79
78
77
76
75
74
OSC1
OSC0
INH
D0
D1
CL
CE
KI5
KI4
KI3
KI2
KI1
KS6
KS5
KS4
KS35
P2/KS2
P1/KS1

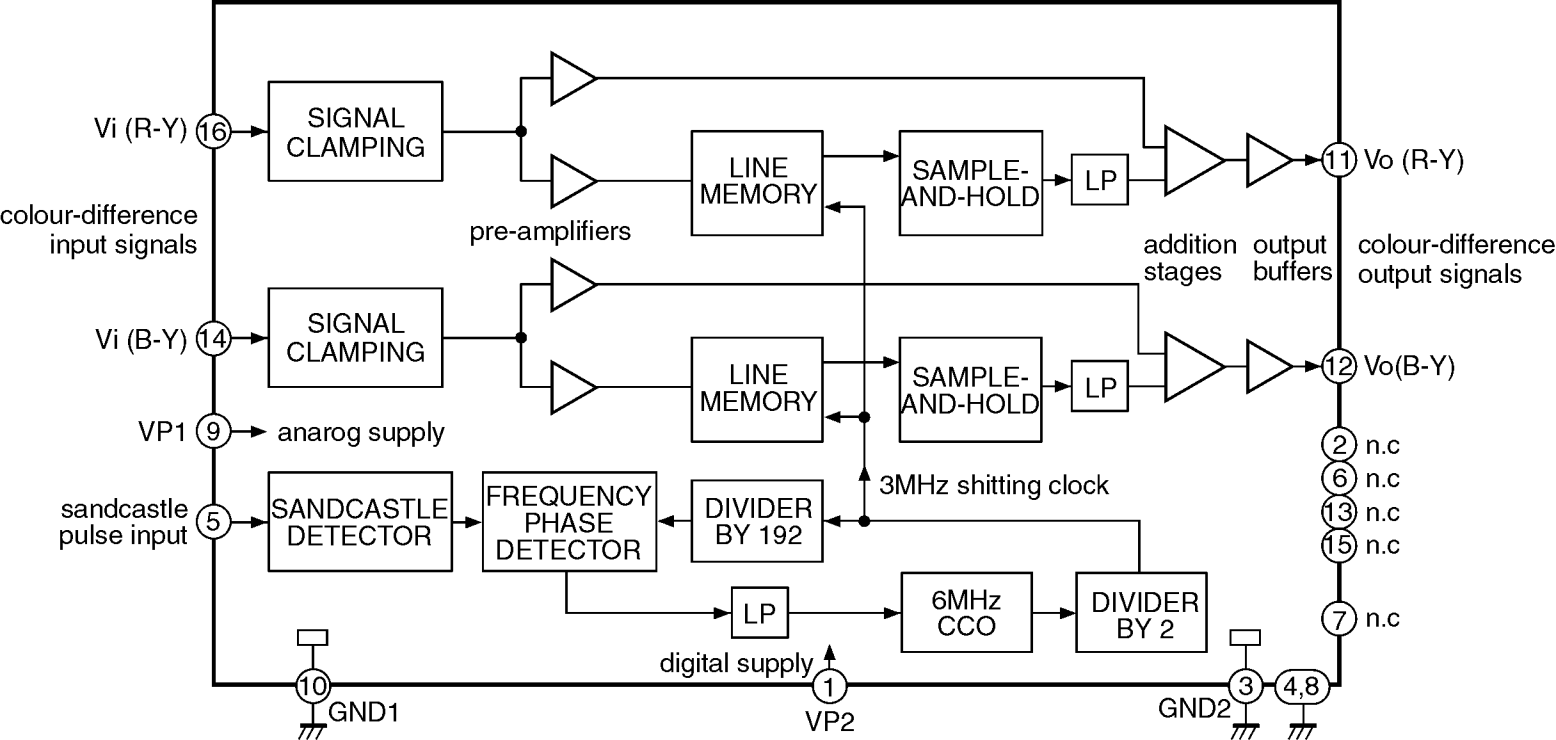
Vi (R-Y)
16
SIGNAL CLAMPING
LINE MEMORY
SAMPLE-AND-HOLD
LP
11
Vo (R-Y)
colour-difference input signals
pre-amplifiers
addition stages
output buffers
colour-difference output signals
Vi (B-Y)
14
SIGNAL CLAMPING
LINE MEMORY
SAMPLE-AND-HOLD
LP
12
Vo(B-Y)
VP1
9
anarog supply
2
n.c
6
n.c
13
n.c
15
n.c
sandcastle pulse input
5
SANDCASTLE DETECTOR
FREQUENCY PHASE DETECTOR
DIVIDER BY 192
3MHz shitting clock
LP
6MHz CCO
DIVIDER BY 2
7
n.c
digital supply
10
GND1
1
VP2
3
GND2
4,8

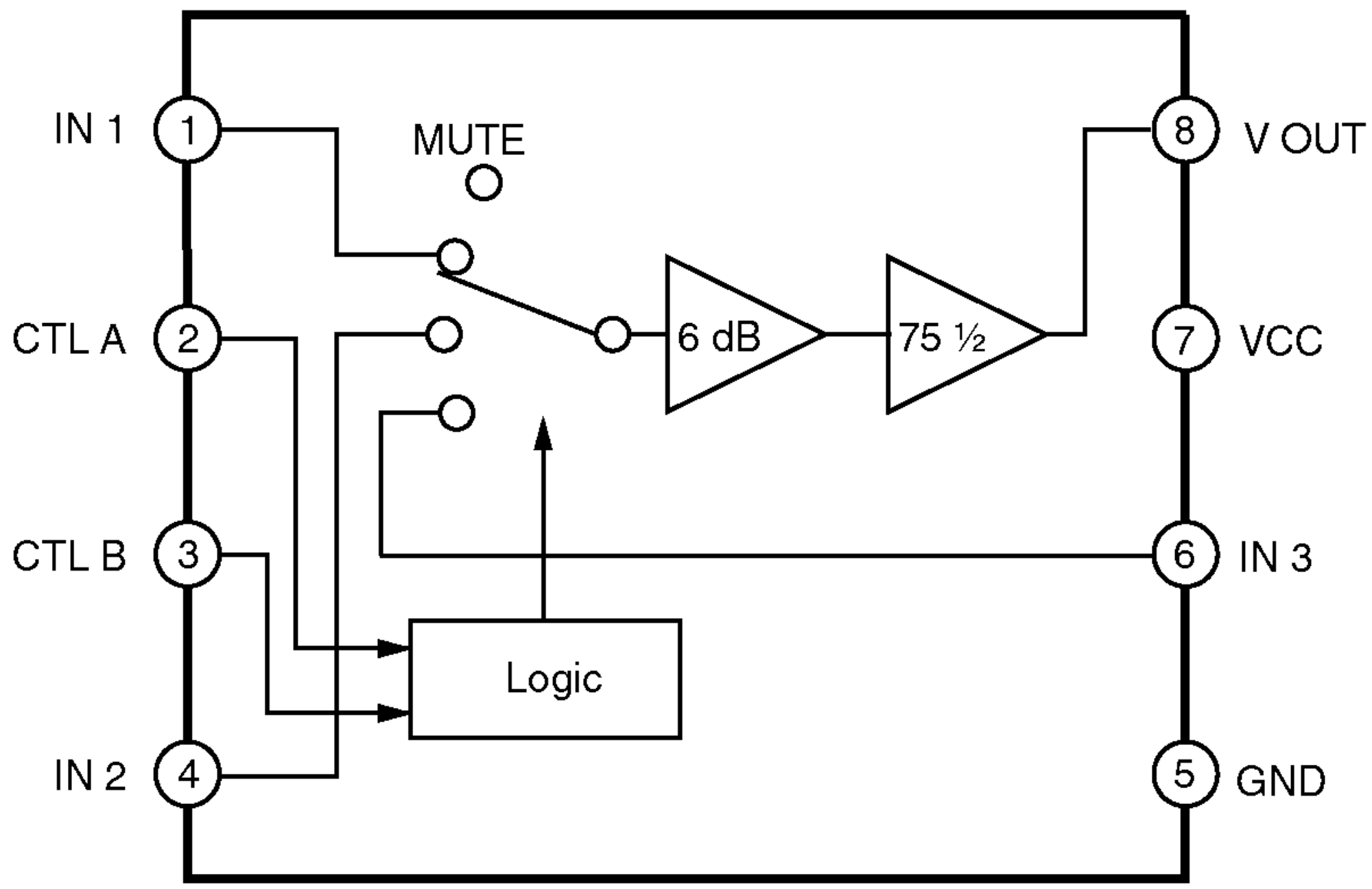
IN 1
1
MUTE
8
V OUT
CTL A
2
6 dB
75 ½
7
VCC
CTL B
3
6
IN 3
Logic
IN 2
4
5
GND

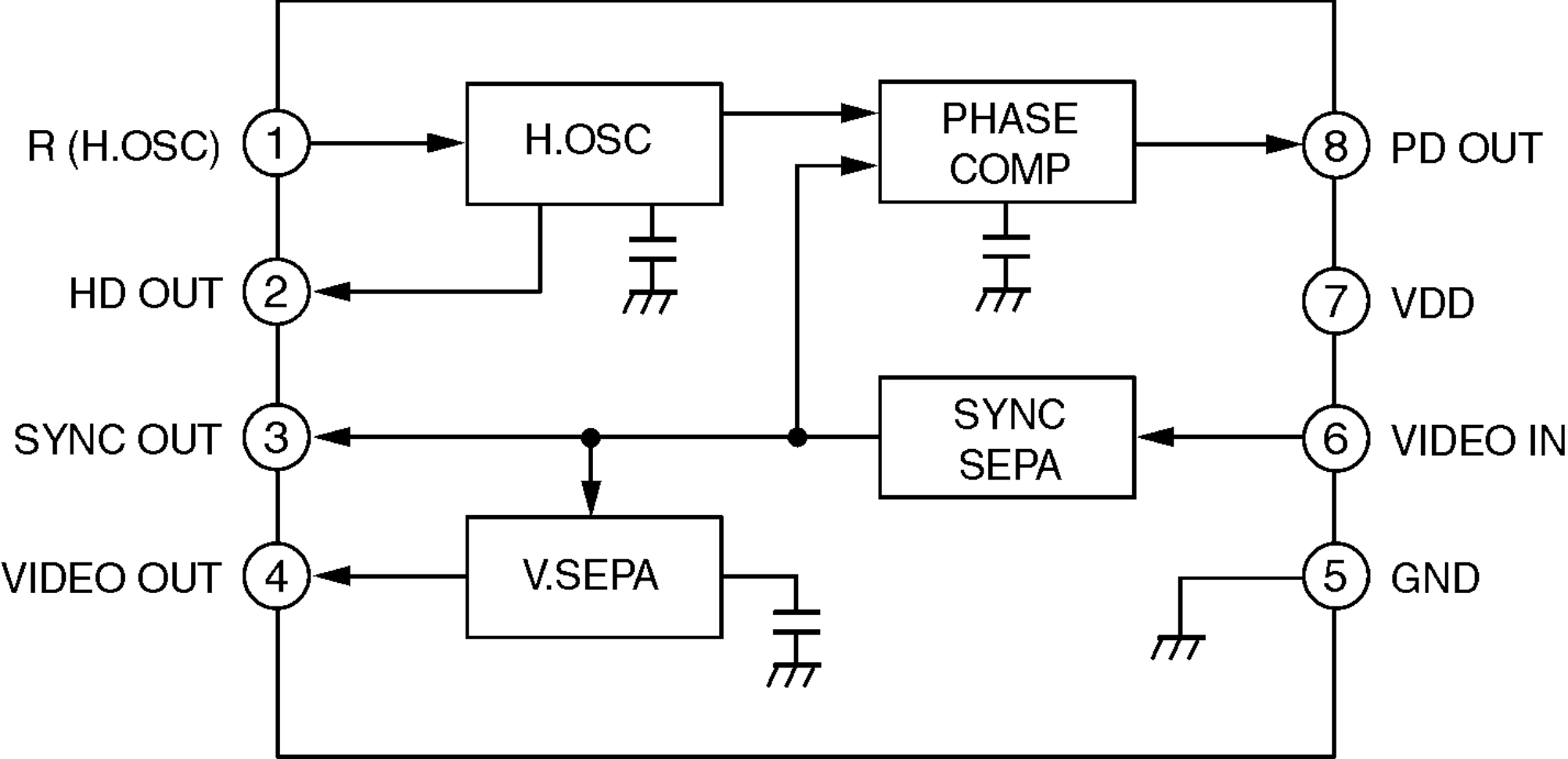
R (H.OSC)
1
H.OSC
PHASE
COMP
8
PD OUT
HD OUT
2
7
VDD
SYNC OUT
3
SYNC
SEPA
6
VIDEO IN
VIDEO OUT
4
V.SEPA
5
GND

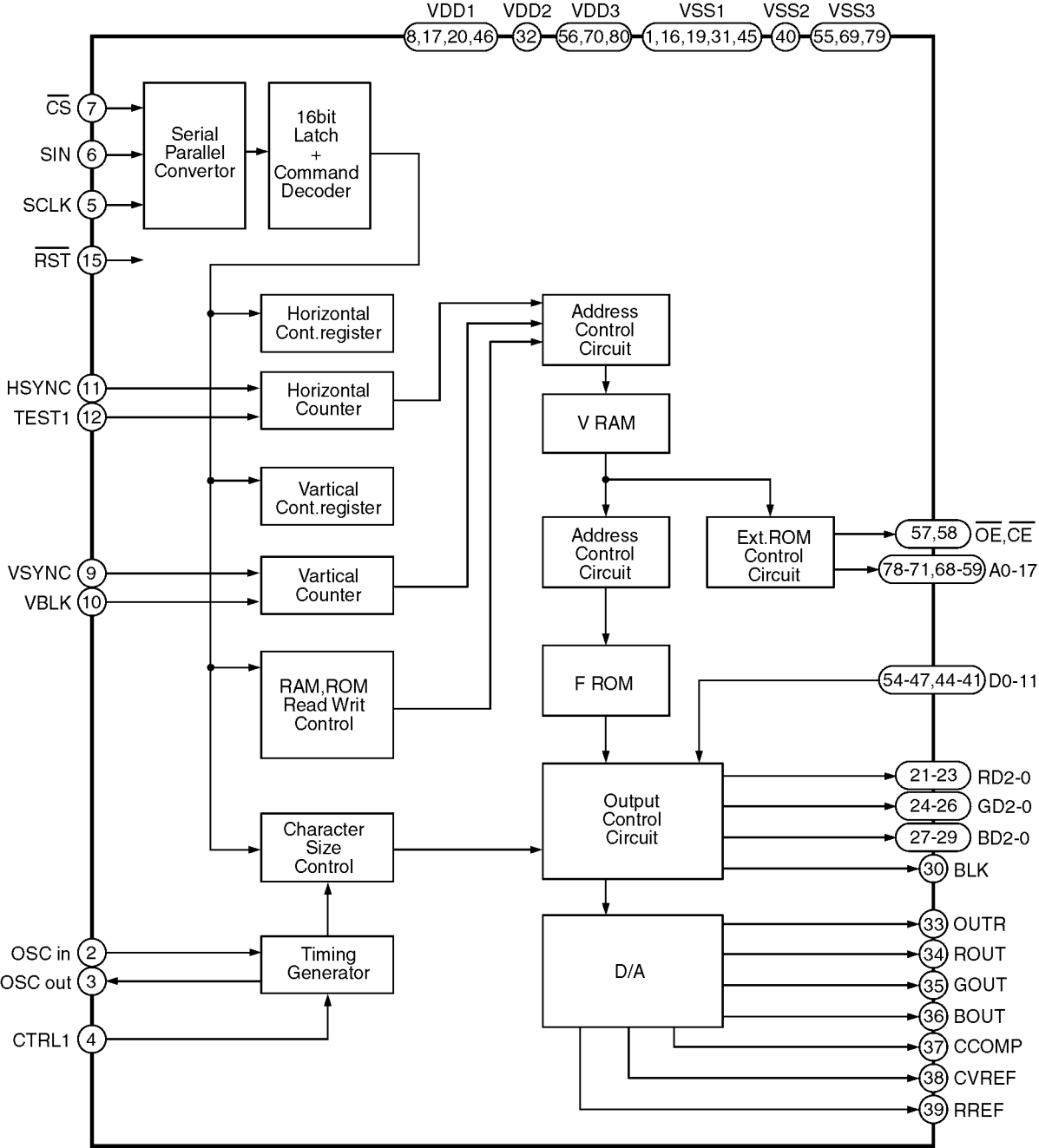
VDD1
VDD2
VDD3
VSS1
VSS2
VSS3
8,17,20,46
32
56,70,80
1,16,19,31,45
40
55,69,79
CS 7
SIN 6
SCLK 5
RST 15
Serial Parallel Convertor
16bit Latch + Command Decoder
Horizontal Cont.register
Horizontal Counter
HSYNC 11
TEST1 12
Vartical Cont.register
Vartical Counter
VSYNC 9
VBLK 10
RAM,ROM Read Writ Control
Character Size Control
Timing Generator
OSC in 2
OSC out 3
CTRL1 4
Address Control Circuit
V RAM
Address Control Circuit
Ext.ROM Control Circuit
F ROM
Output Control Circuit
D/A
57,58 OE,CE
78-71,68-59 A0-17
54-47,44-41 D0-11
21-23 RD2-0
24-26 GD2-0
27-29 BD2-0
30 BLK
33 OUTR
34 ROUT
35 GOUT
36 BOUT
37 CCOMP
38 CVREF
39 RREF

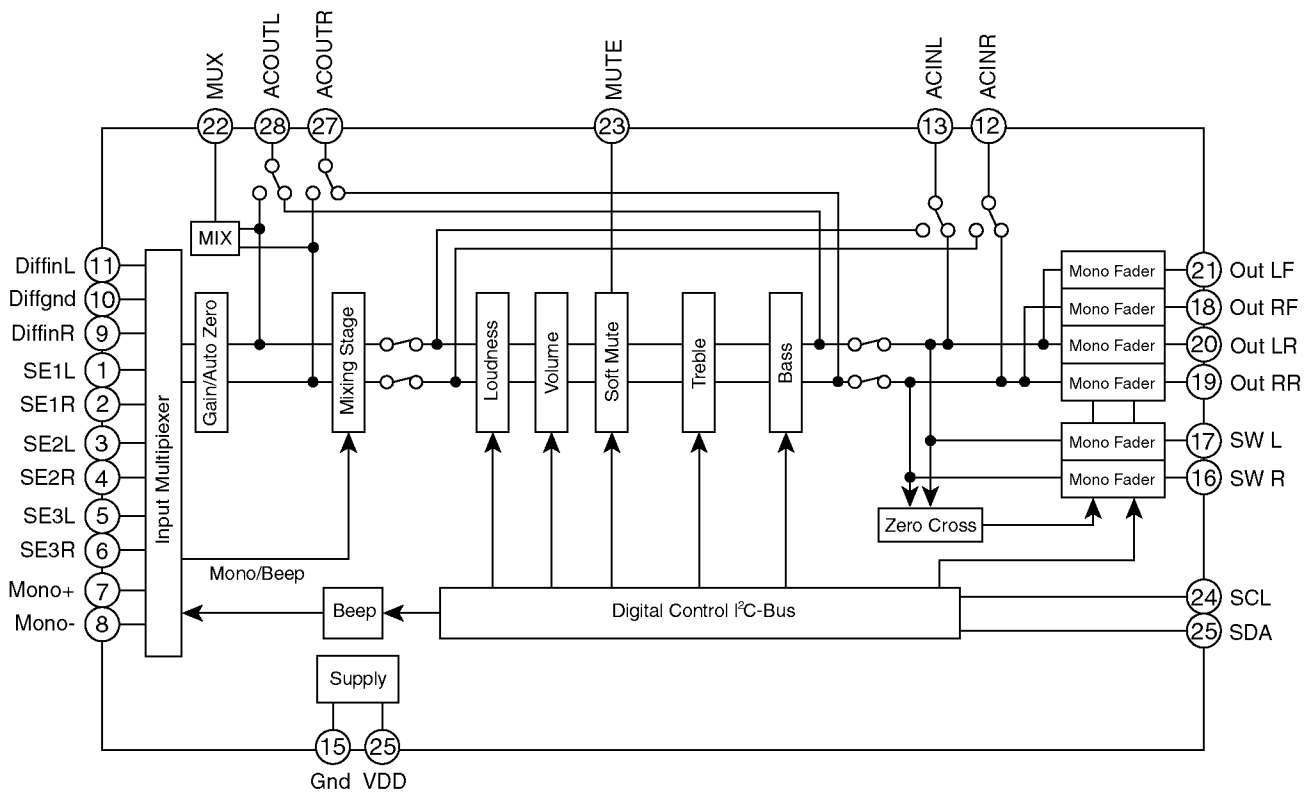
MUX
ACOUTL
ACOUTR
MUTE
ACINL
ACINR
22
28
27
23
13
12
MIX
DiffinL
Diffgnd
DiffinR
SE1L
SE1R
SE2L
SE2R
SE3L
SE3R
Mono+
Mono-
11
10
9
1
2
3
4
5
6
7
8
Input Multipiexer
Gain/Auto Zero
Mixing Stage
Loudness
Volume
Soft Mute
Treble
Bass
Mono Fader
Mono Fader
Mono Fader
Mono Fader
Mono Fader
Mono Fader
21
18
20
19
17
16
Out LF
Out RF
Out LR
Out RR
SW L
SW R
Zero Cross
Mono/Beep
Beep
Digital Control I²C-Bus
24
25
SCL
SDA
Supply
15
25
Gnd
VDD

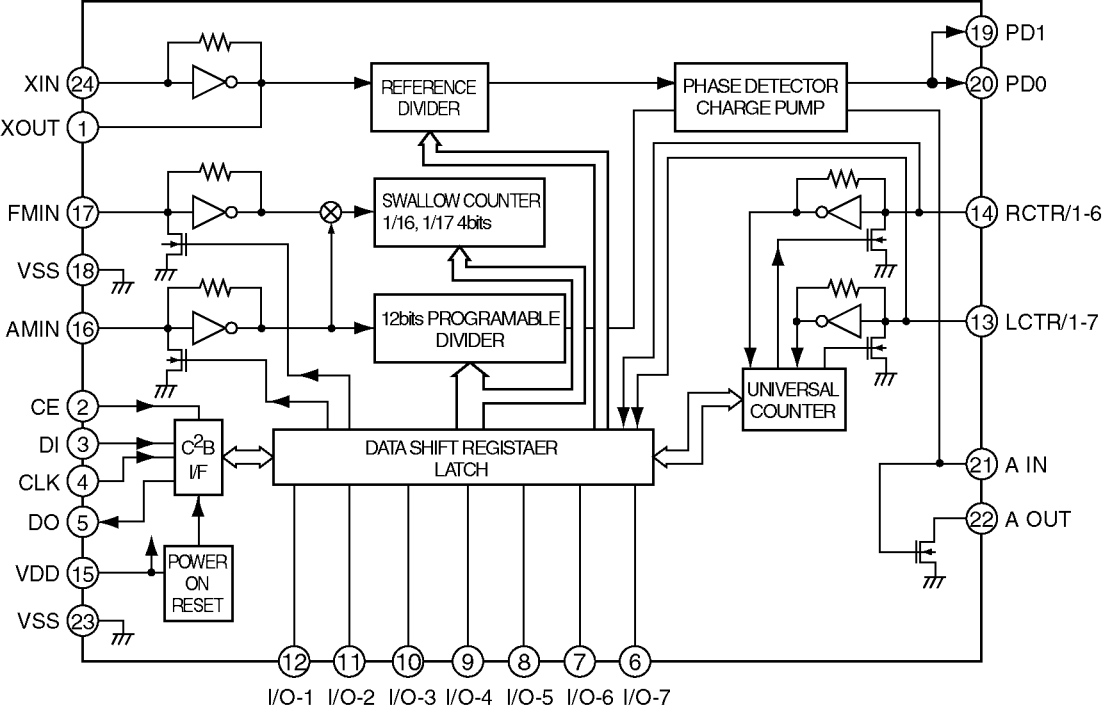
XIN
24
XOUT
1
FMIN
17
VSS
18
AMIN
16
CE
2
DI
3
CLK
4
DO
5
VDD
15
VSS
23
REFERENCE DIVIDER
PHASE DETECTOR CHARGE PUMP
SWALLOW COUNTER 1/16, 1/17 4bits
12bits PROGRAMABLE DIVIDER
C2B I/F
DATA SHIFT REGISTAER LATCH
POWER ON RESET
UNIVERSAL COUNTER
19
PD1
20
PD0
14
RCTR/1-6
13
LCTR/1-7
21
A IN
22
A OUT
12
11
10
9
8
7
6
I/O-1
I/O-2
I/O-3
I/O-4
I/O-5
I/O-6
I/O-7

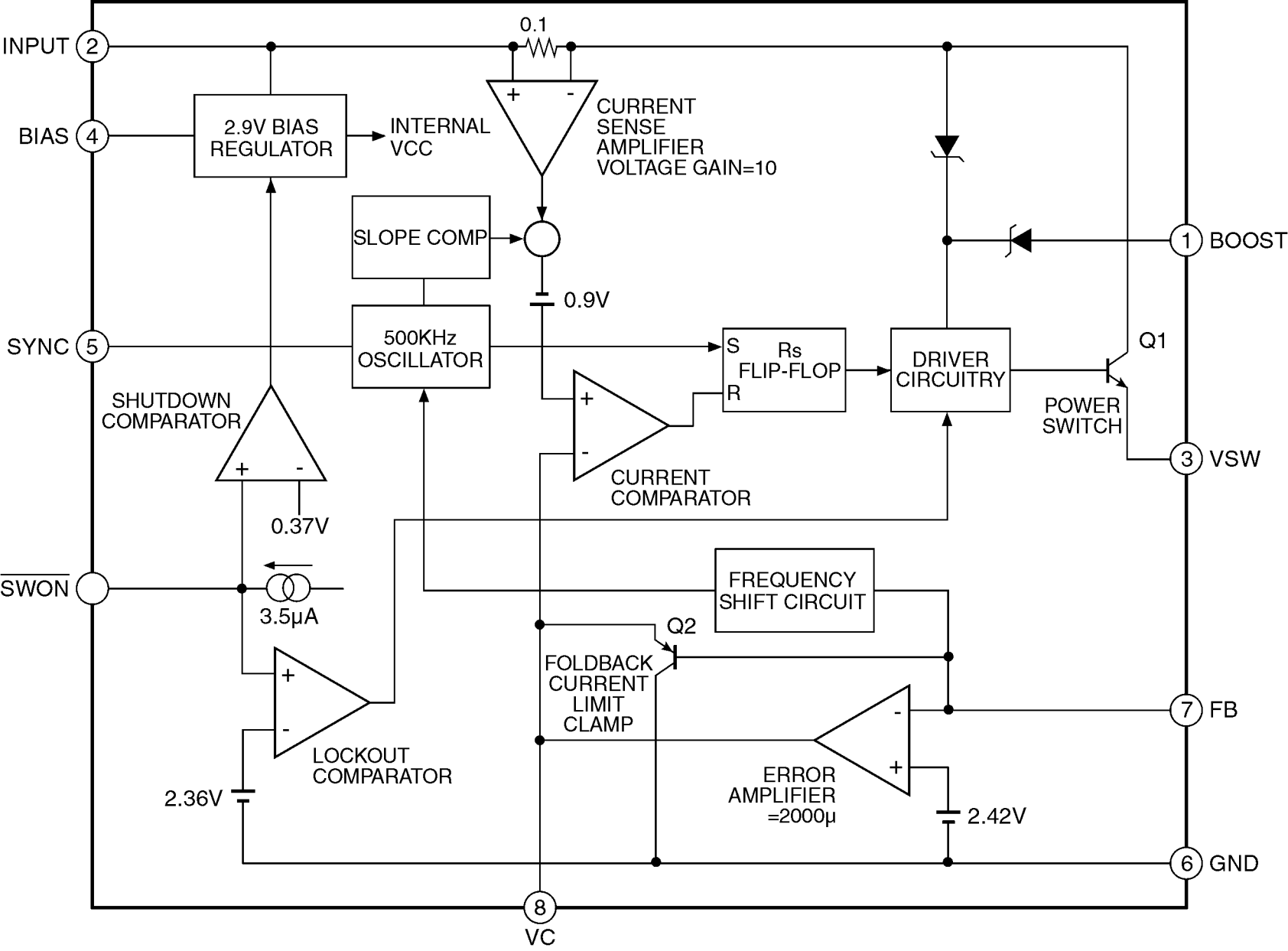
INPUT
2
0.1
BIAS
4
2.9V BIAS REGULATOR
INTERNAL VCC
CURRENT SENSE AMPLIFIER VOLTAGE GAIN=10
SLOPE COMP
0.9V
1
BOOST
SYNC
5
500KHz OSCILLATOR
S
Rs
FLIP-FLOP
R
DRIVER CIRCUITRY
Q1
POWER SWITCH
3
VSW
SHUTDOWN COMPARATOR
CURRENT COMPARATOR
0.37V
SWON
3.5µA
FREQUENCY SHIFT CIRCUIT
Q2
FOLDBACK CURRENT LIMIT CLAMP
7
FB
LOCKOUT COMPARATOR
2.36V
ERROR AMPLIFIER =2000µ
2.42V
6
GND
8
VC

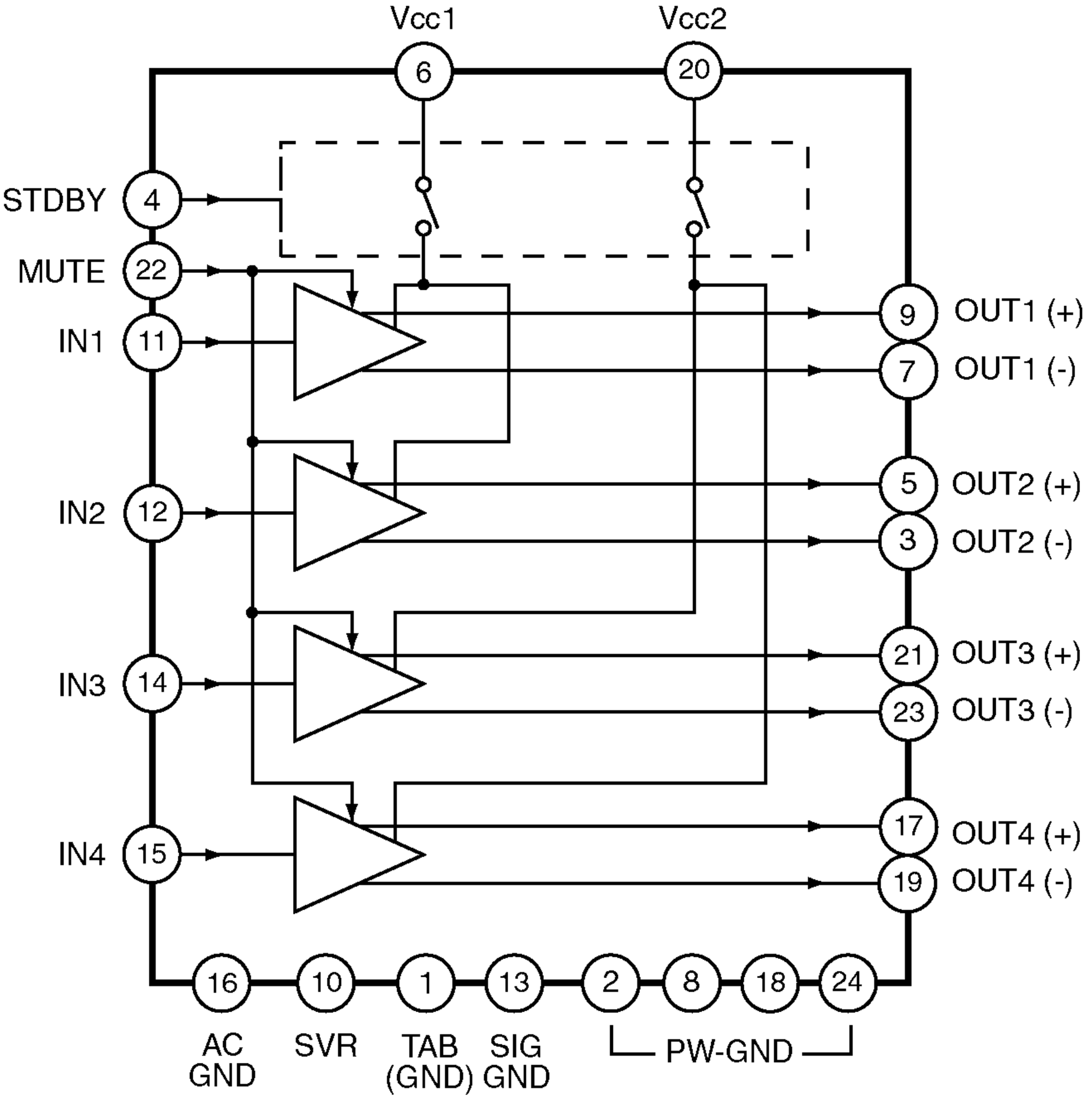
Vcc1
Vcc2
6
20
STDBY
4
MUTE
22
IN1
11
IN2
12
IN3
14
IN4
15
9
OUT1 (+)
7
OUT1 (-)
5
OUT2 (+)
3
OUT2 (-)
21
OUT3 (+)
23
OUT3 (-)
17
OUT4 (+)
19
OUT4 (-)
16
10
1
13
2
8
18
24
AC GND
SVR
TAB (GND)
SIG GND
PW-GND

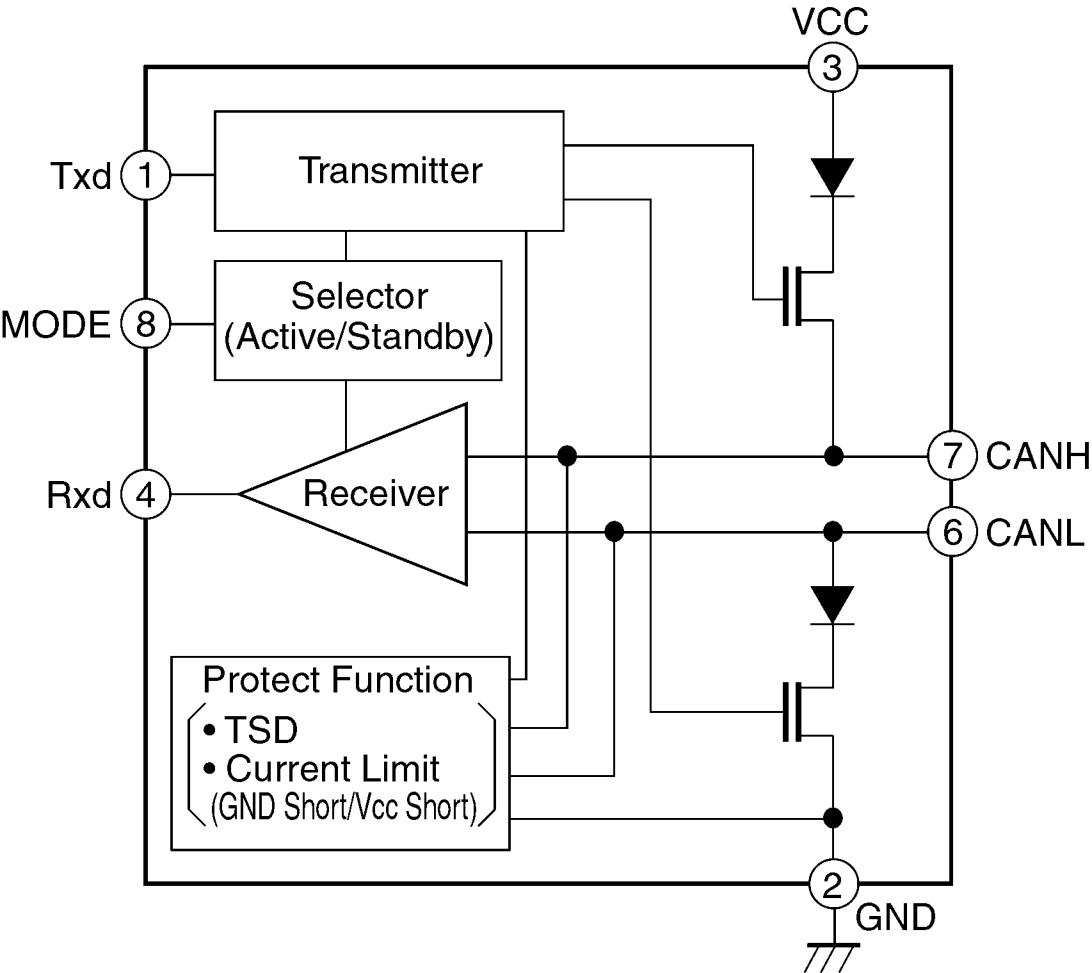
VCC
3
Txd
1
Transmitter
MODE
8
Selector
(Active/Standby)
Rxd
4
Receiver
7
CANH
6
CANL
Protect Function
• TSD
• Current Limit
(GND Short/Vcc Short)
2
GND

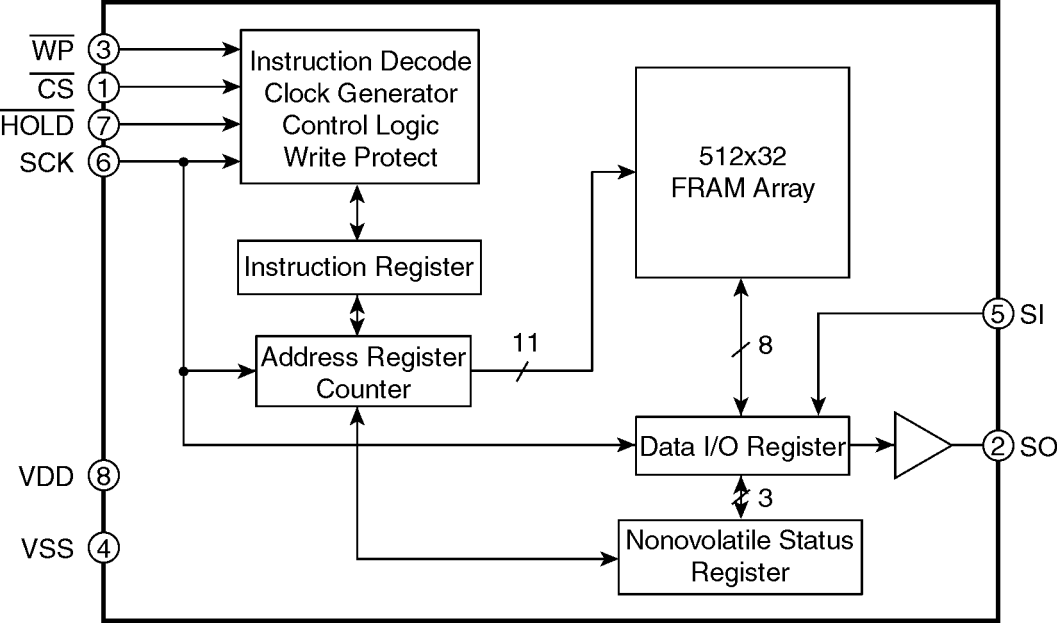
WP
3
CS
1
HOLD
7
SCK
6
Instruction Decode
Clock Generator
Control Logic
Write Protect
512x32
FRAM Array
Instruction Register
Address Register
Counter
11
8
5
SI
Data I/O Register
2
SO
3
VDD
8
VSS
4
Nonovolatile Status
Register

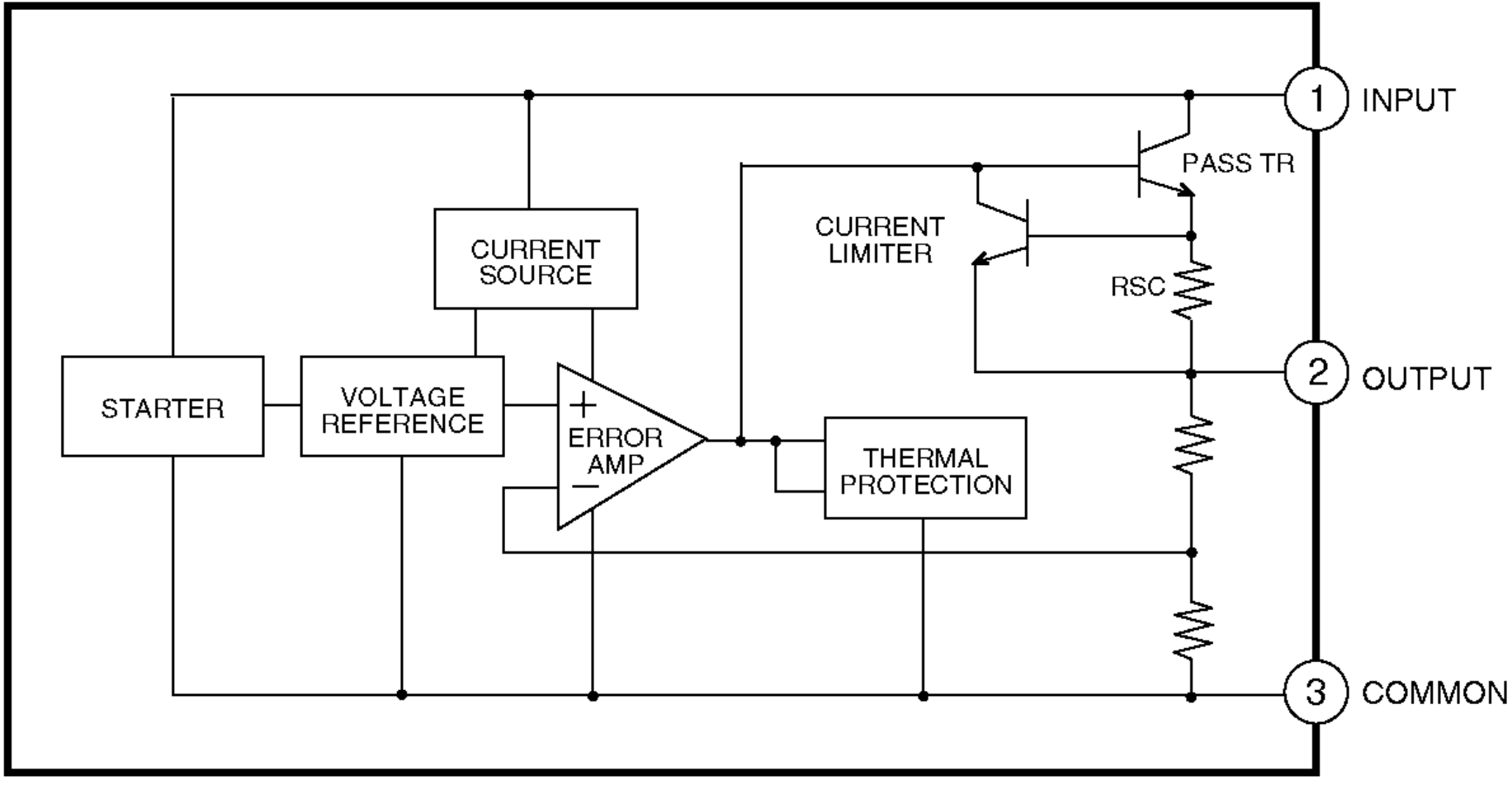
1
INPUT
PASS TR
CURRENT
LIMITER
CURRENT
SOURCE
RSC
2
OUTPUT
STARTER
VOLTAGE
REFERENCE
+
ERROR
AMP
−
THERMAL
PROTECTION
3
COMMON

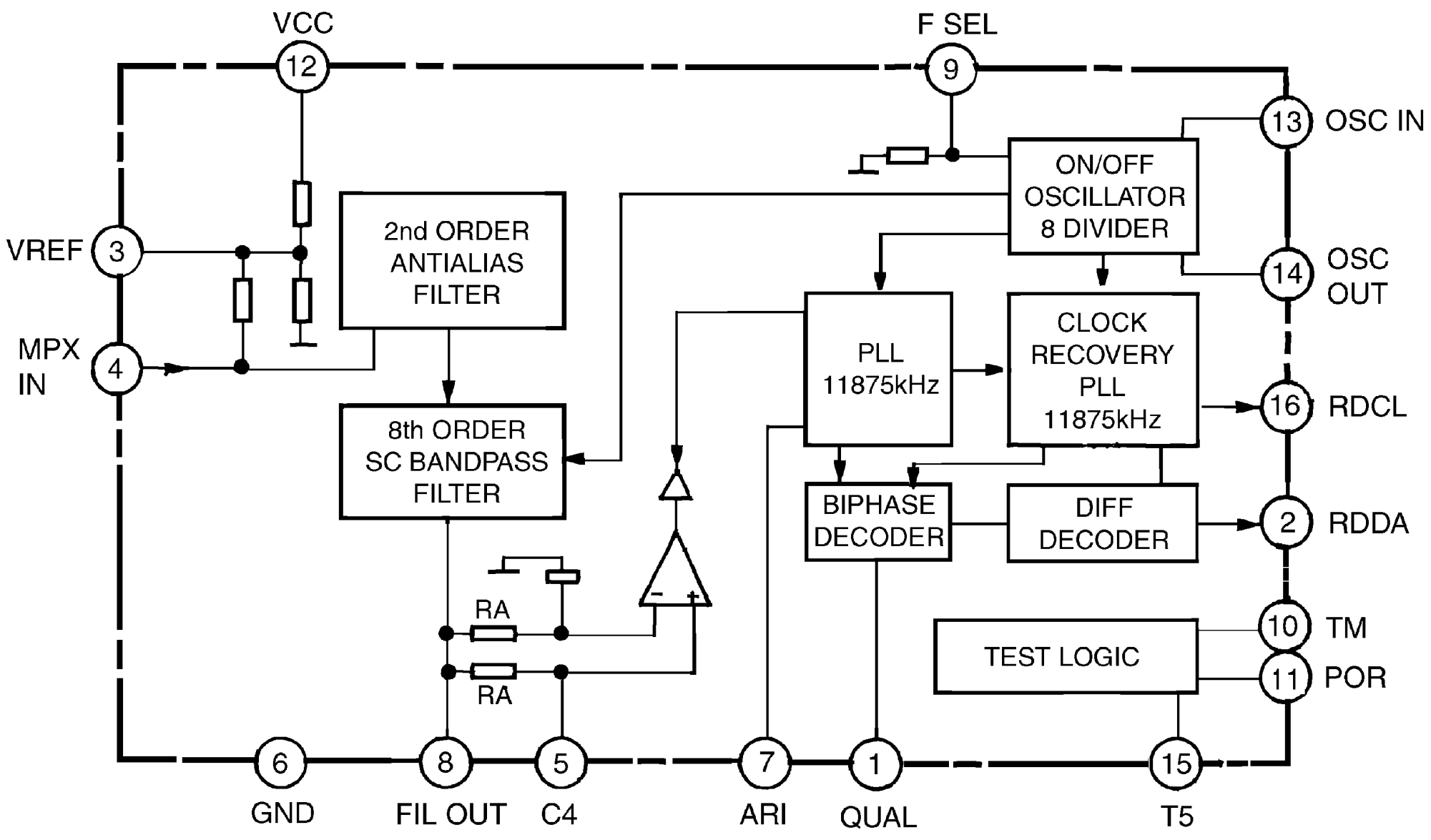
VCC
12
F SEL
9
13
OSC IN
ON/OFF
OSCILLATOR
8 DIVIDER
VREF
3
2nd ORDER
ANTIALIAS
FILTER
14
OSC
OUT
MPX
IN
4
PLL
11875kHz
CLOCK
RECOVERY
PLL
11875kHz
16
RDCL
8th ORDER
SC BANDPASS
FILTER
BIPHASE
DECODER
DIFF
DECODER
2
RDDA
RA
RA
TEST LOGIC
10
TM
11
POR
6
8
5
7
1
15
GND
FIL OUT
C4
ARI
QUAL
T5

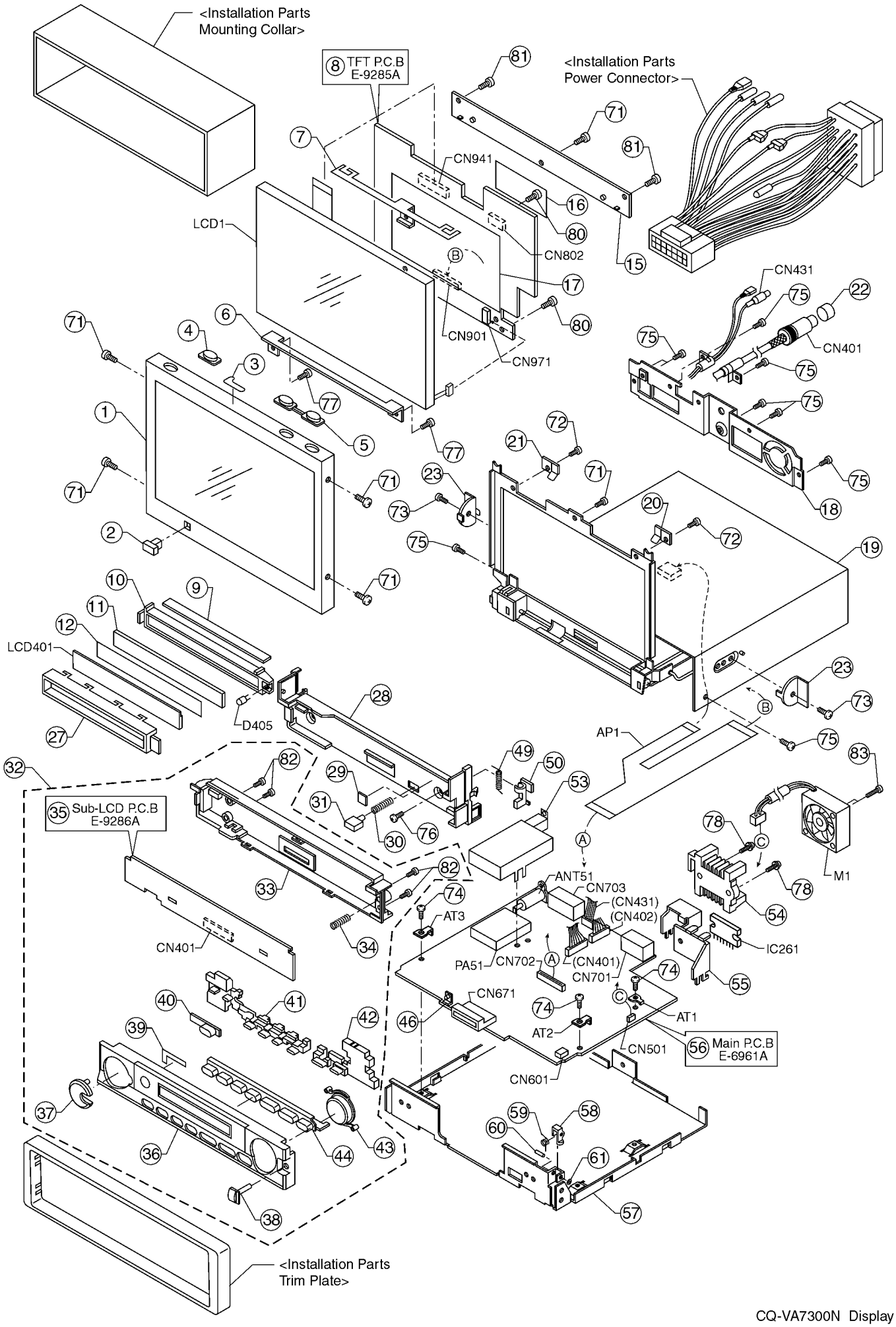

CQ-VA7300N Display

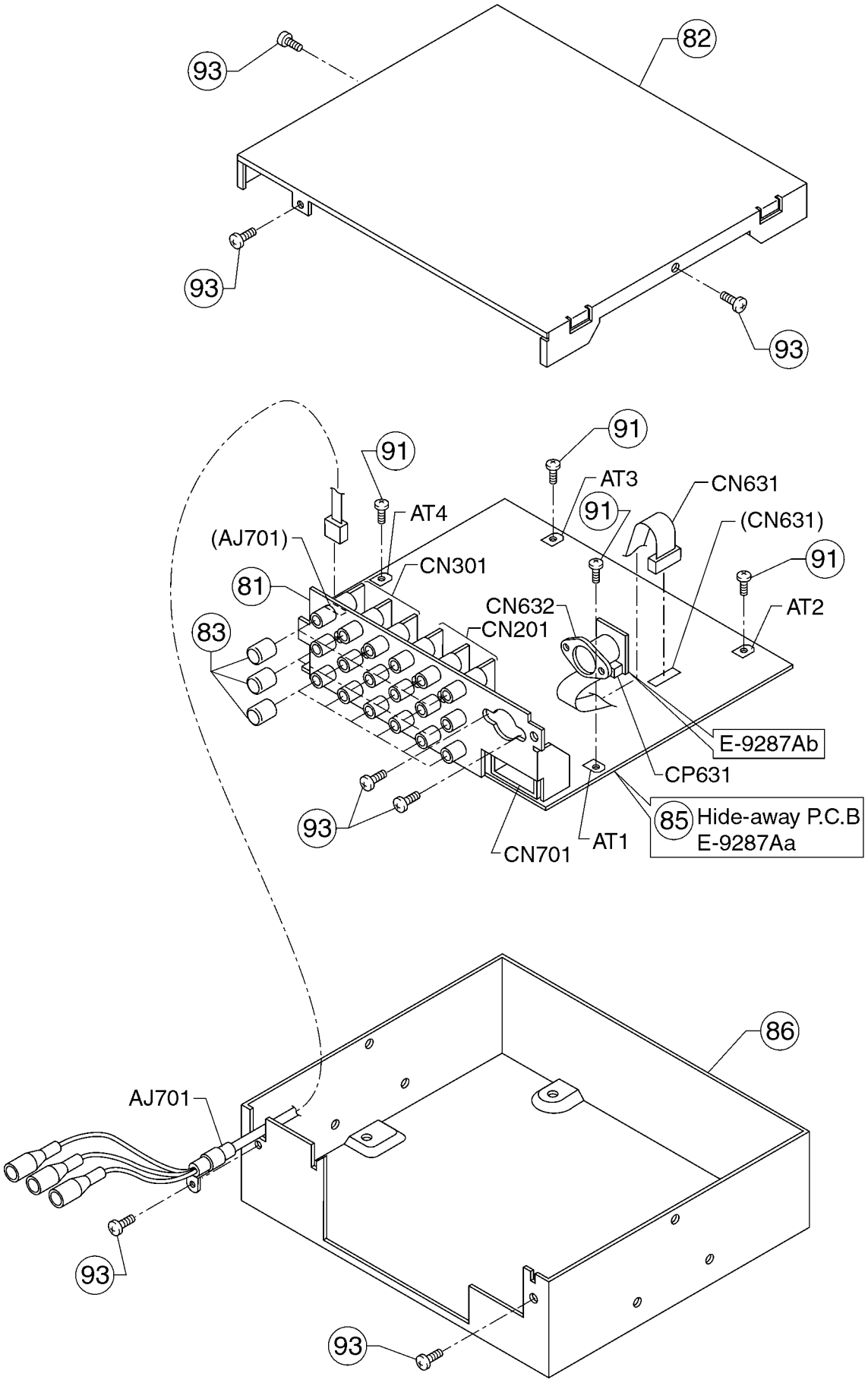
82
93
93
93
91
91
AT3
CN631
91
AT4
(CN631)
(AJ701)
CN301
91
81
CN632
AT2
83
CN201
E-9287Ab
CP631
93
85
Hide-away P.C.B
E-9287Aa
CN701
AT1
86
AJ701
93
93

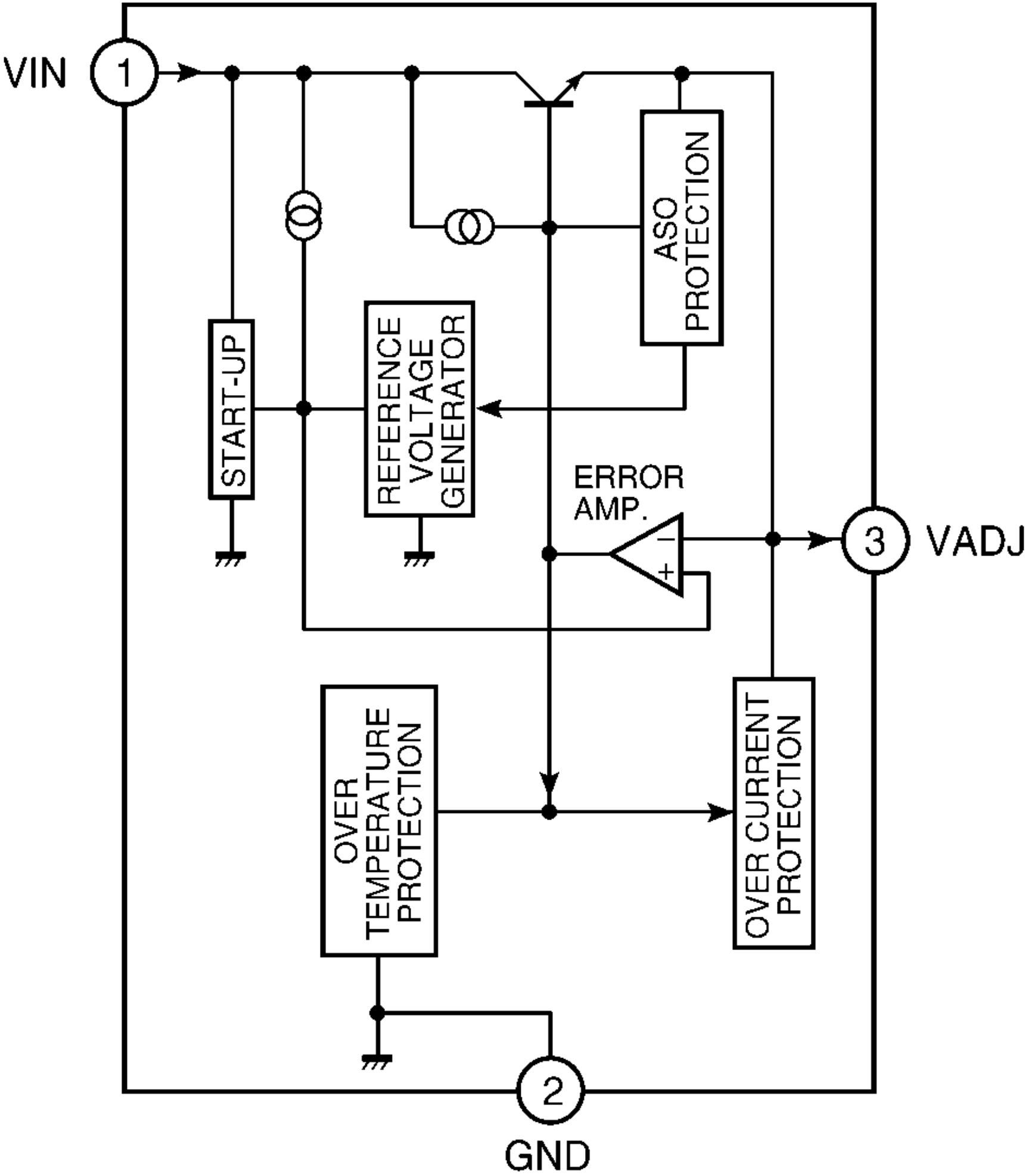
VIN
1
START-UP
REFERENCE VOLTAGE GENERATOR
ASO PROTECTION
ERROR AMP.
3
VADJ
OVER TEMPERATURE PROTECTION
OVER CURRENT PROTECTION
2
GND

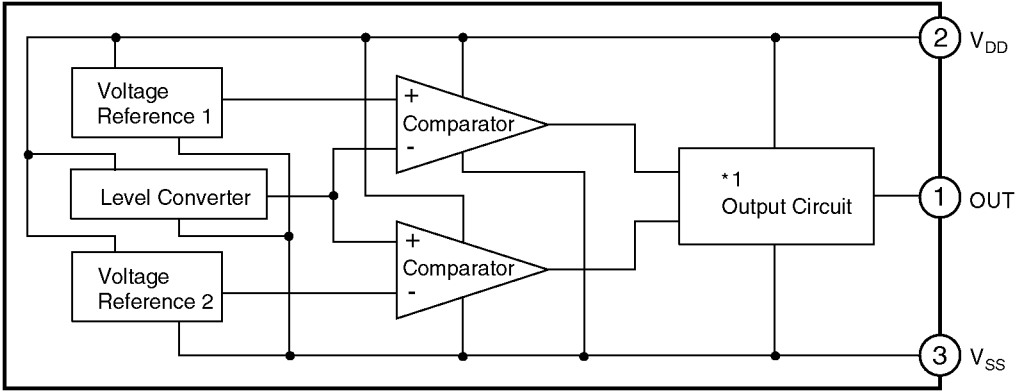
Voltage Reference 1
Level Converter
Voltage Reference 2
+
Comparator
-
+
Comparator
-
*1
Output Circuit
2
V_{DD}
1
OUT
3
V_{SS}

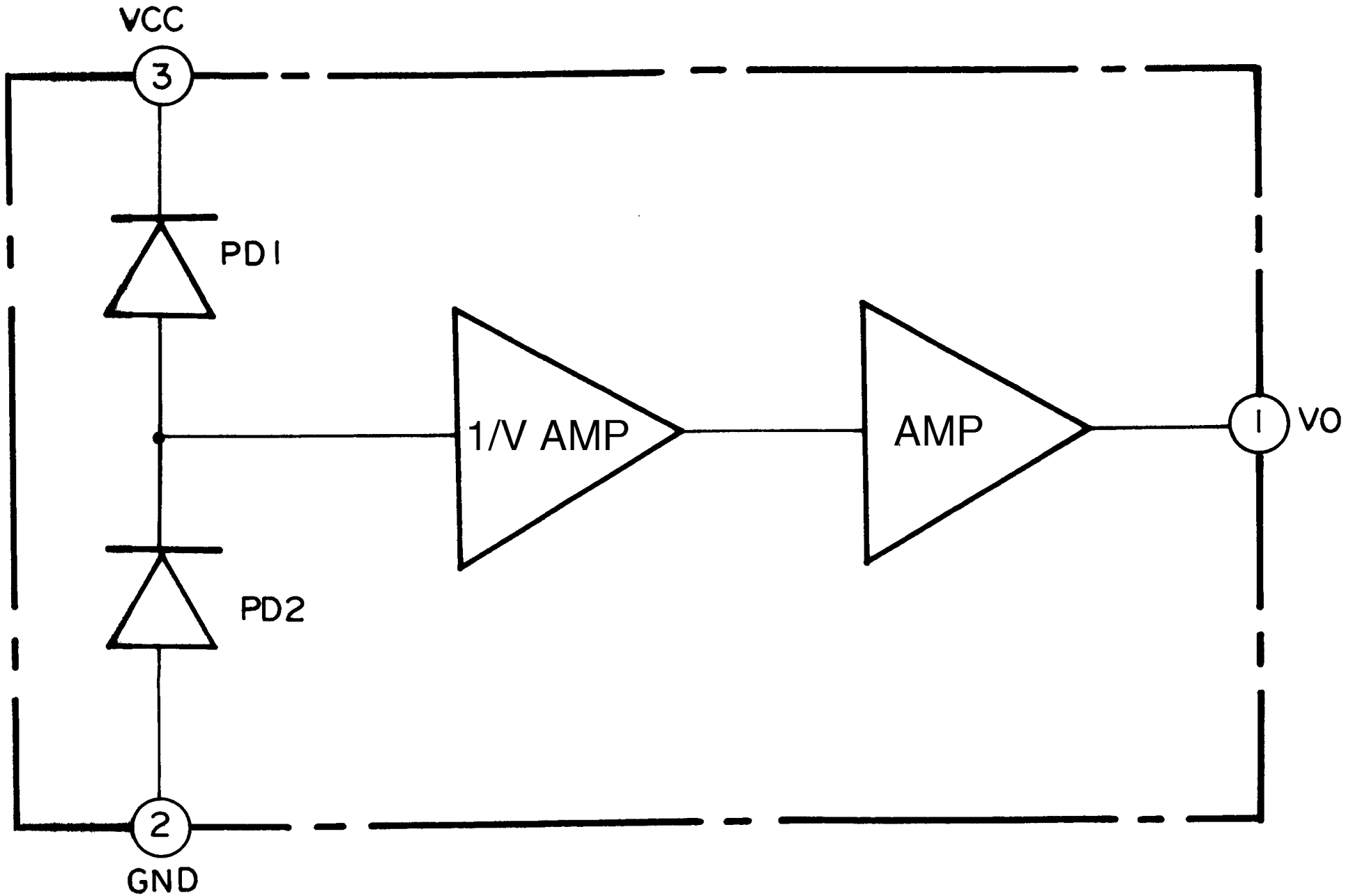
VCC
3
PD1
1/V AMP
AMP
1
VO
PD2
2
GND

17.5. Hide-away Block

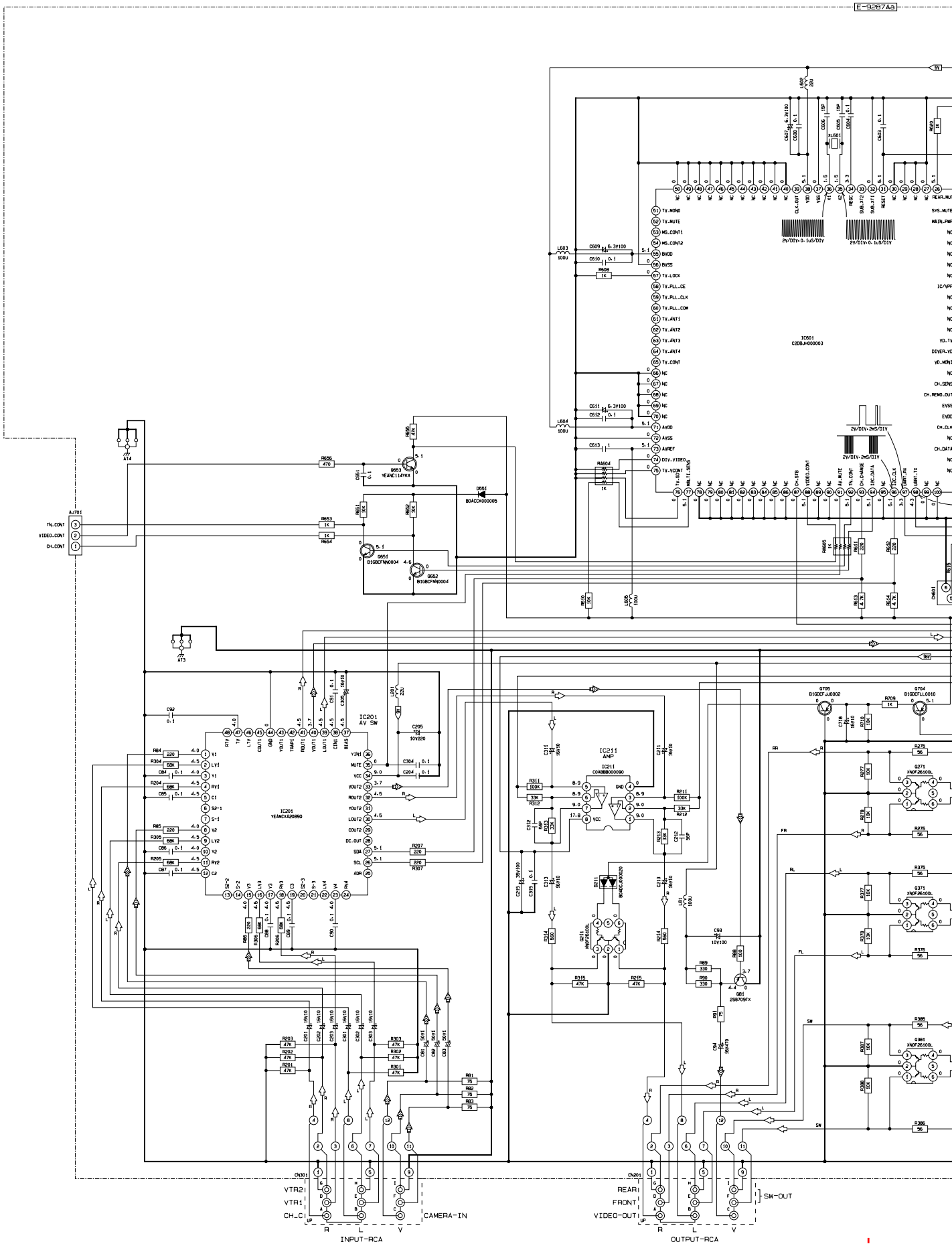

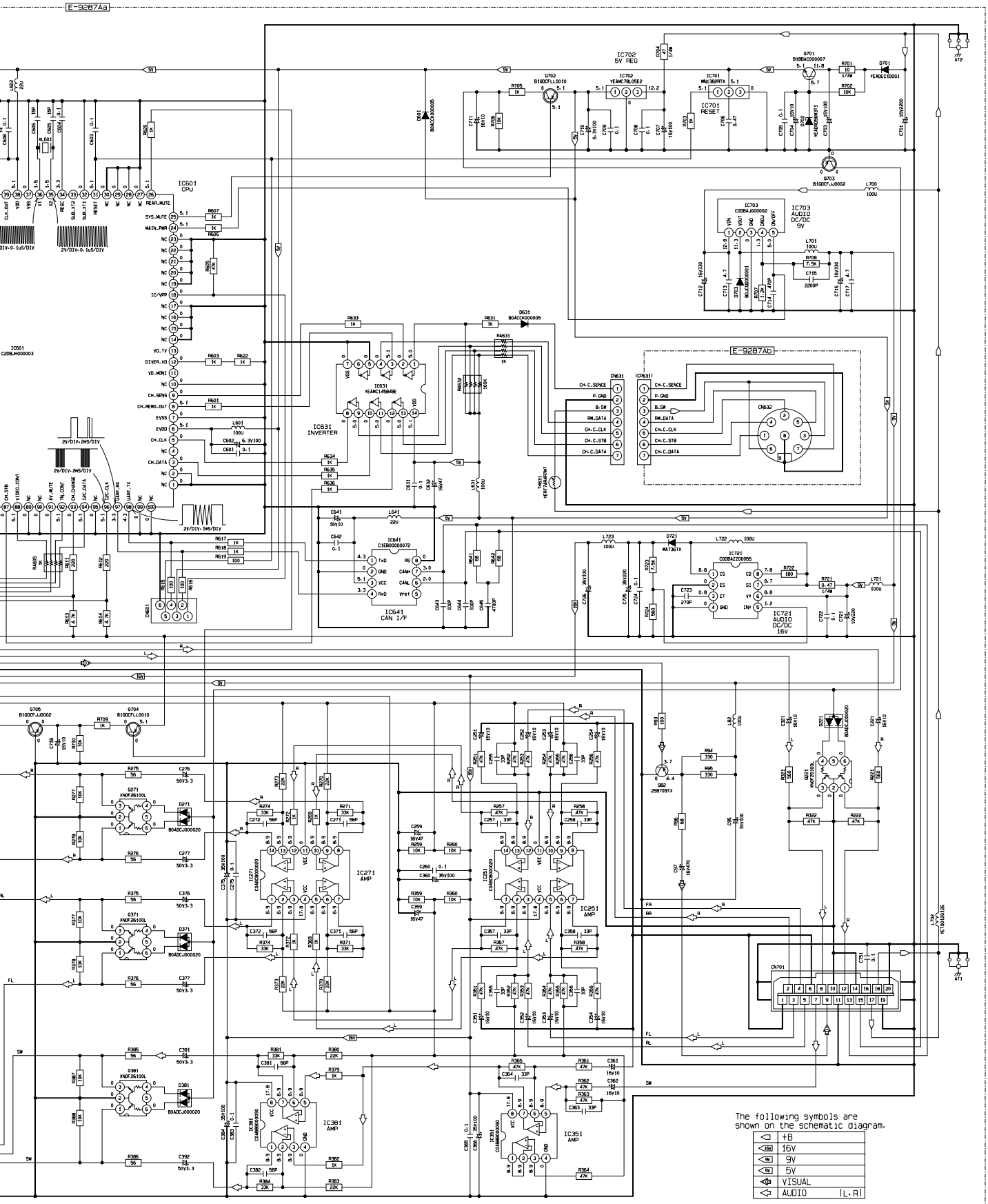
E-9287Aa
E-9287Ab
IC601 CPU
IC702 5V REG
IC701 RESET
IC703 AUDIO DC/DC 9V
IC631 INVERTER
IC641 CAN I/F
IC721 AUDIO DC/DC 16V
IC271 AMP
IC251 AMP
IC381 AMP
IC351 AMP
CN631
CN632
CN651
CN701
The following symbols are shown on the schematic diagram.
+B
16V
9V
5V
VISUAL
AUDIO (L.R)

17.4. Sub-LCD Block

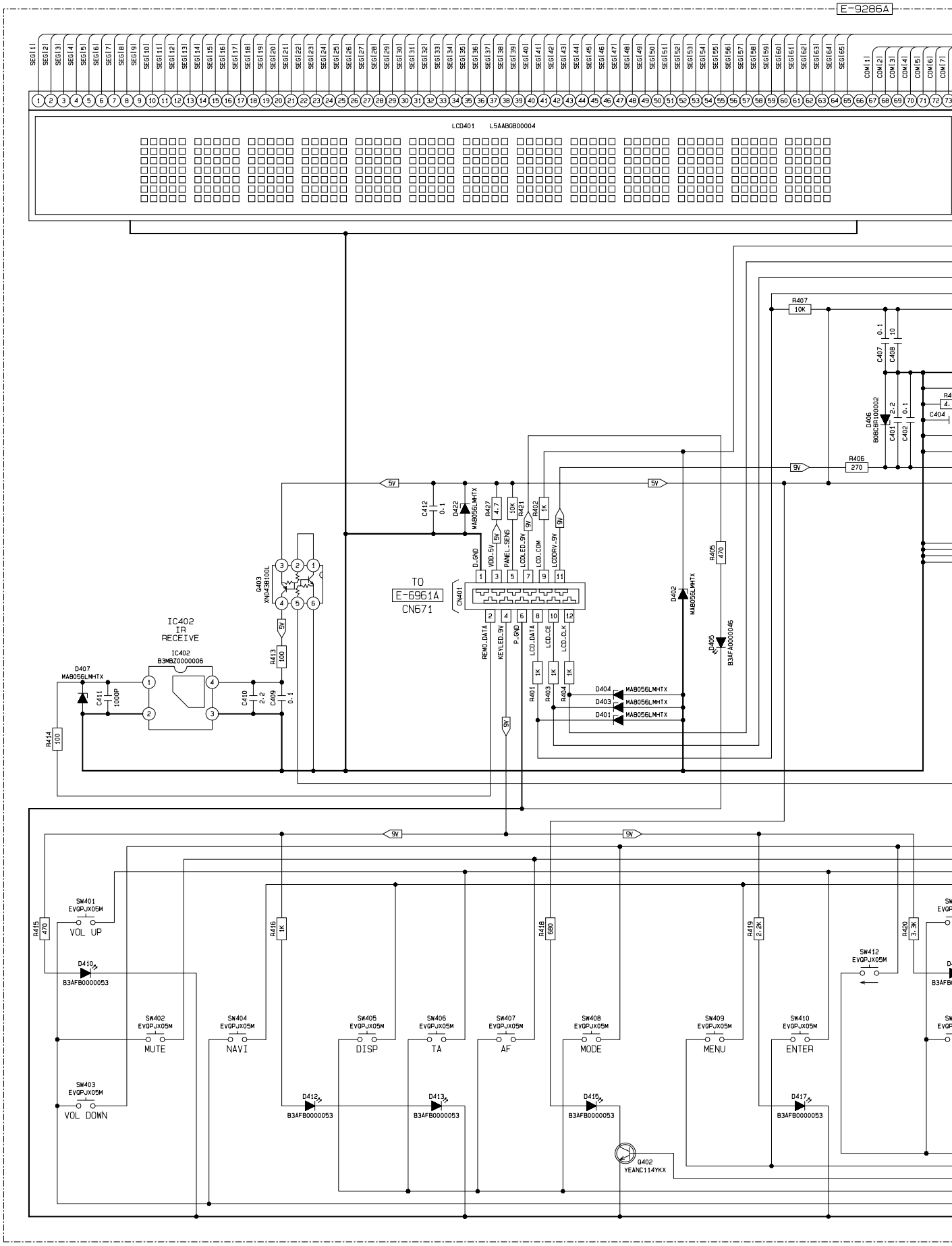

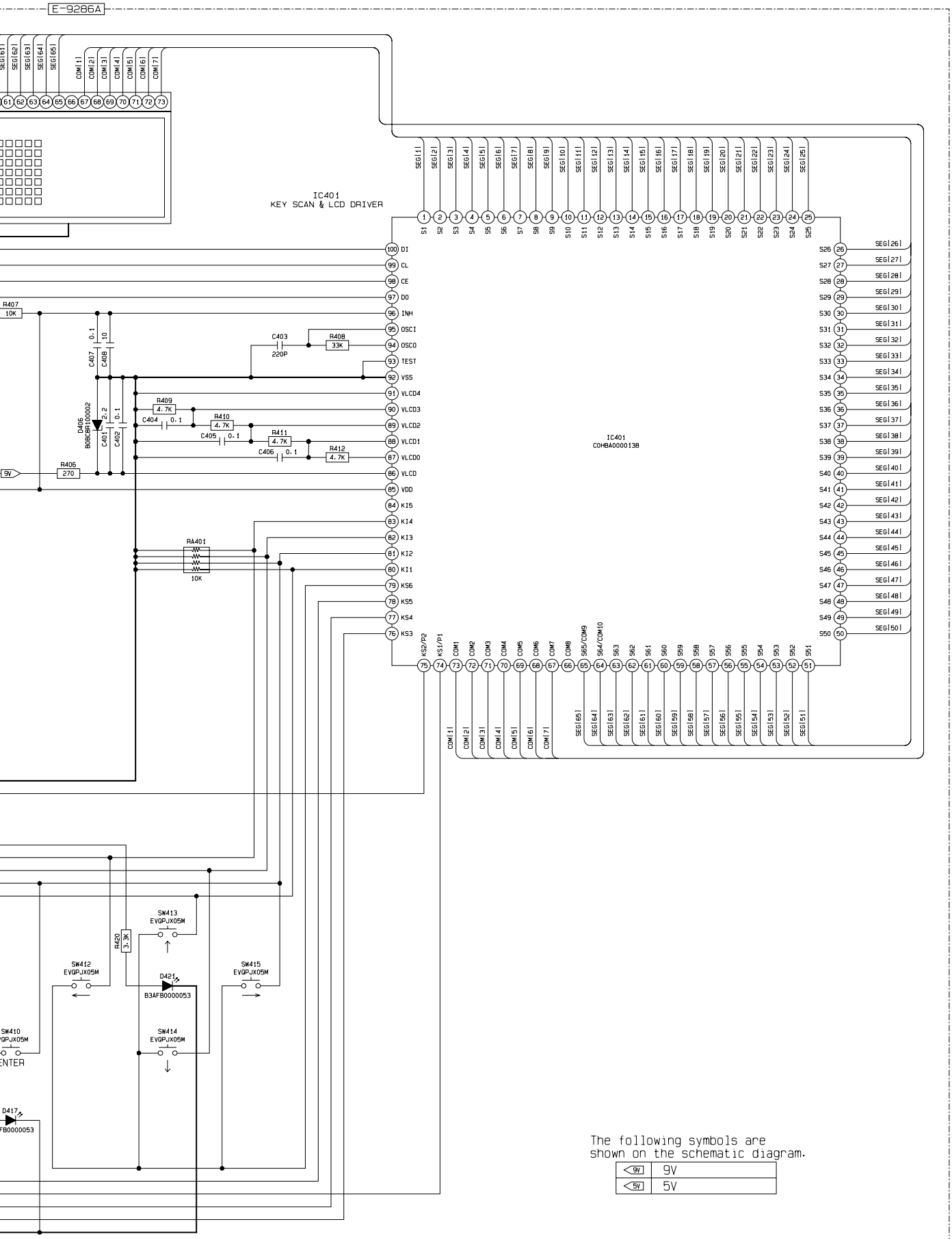

CQ-VA7300N DISP

17 SCHEMATIC DIAGRAM

17.1. Main Block-1

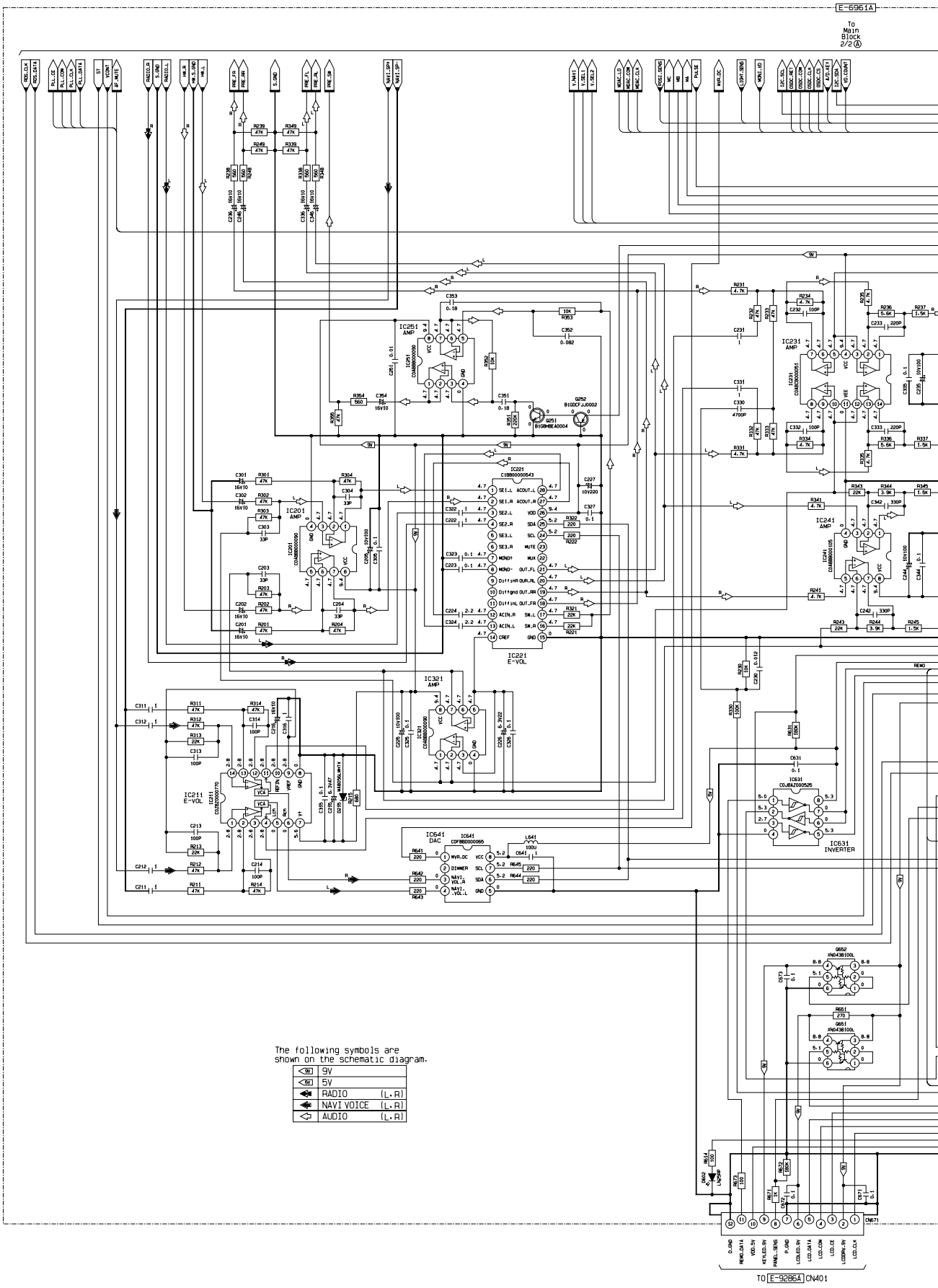

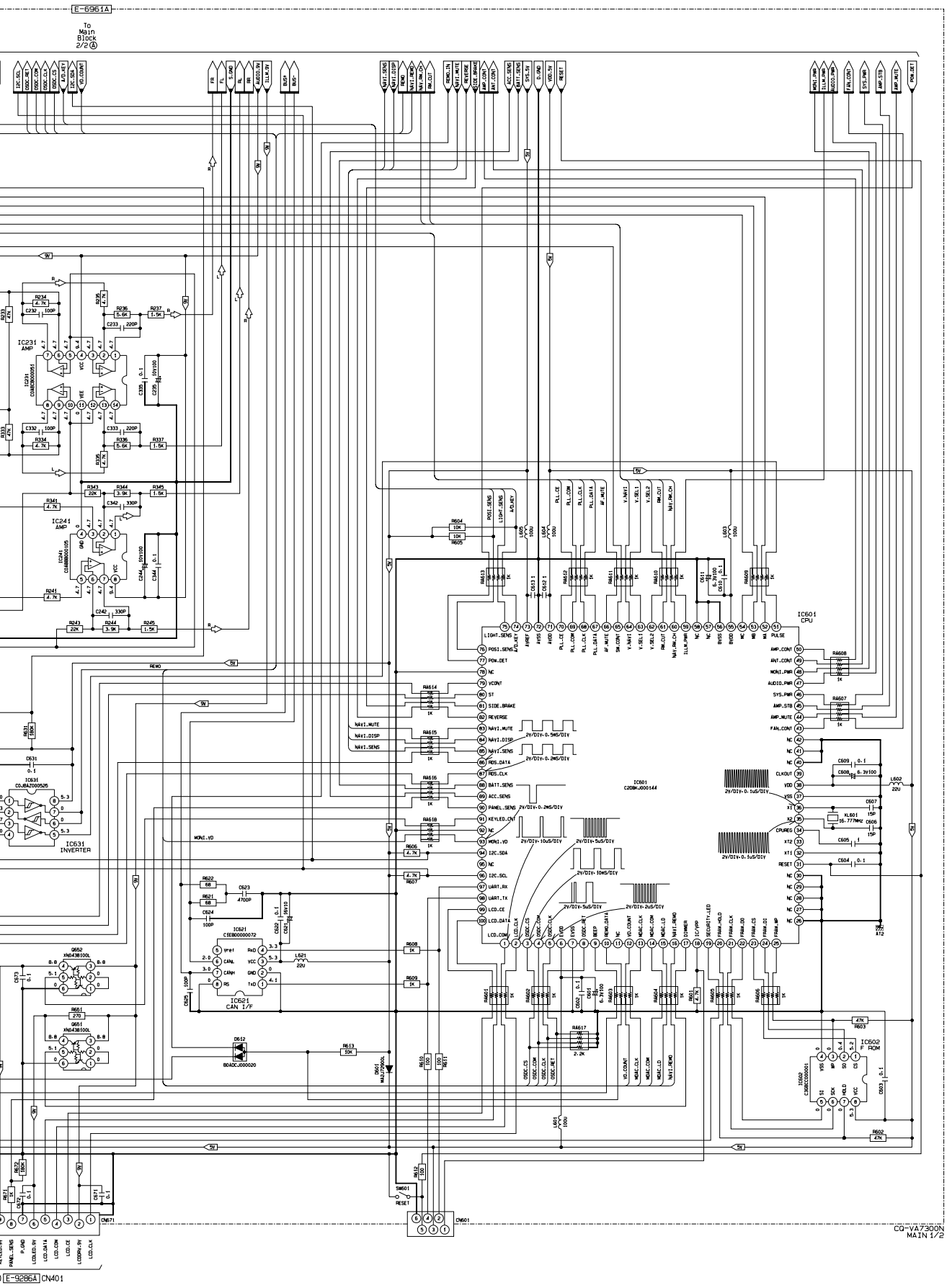
E-6961A
To Main Block 2/2
IC231 AMP
IC241 AMP
IC631 INVERTER
IC601 CPU
IC621 CAN I/F
IC602 F ROM
CN401
CN601
CN671
CQ-VA7300N MAIN 1/2

17.2. Main Block-2

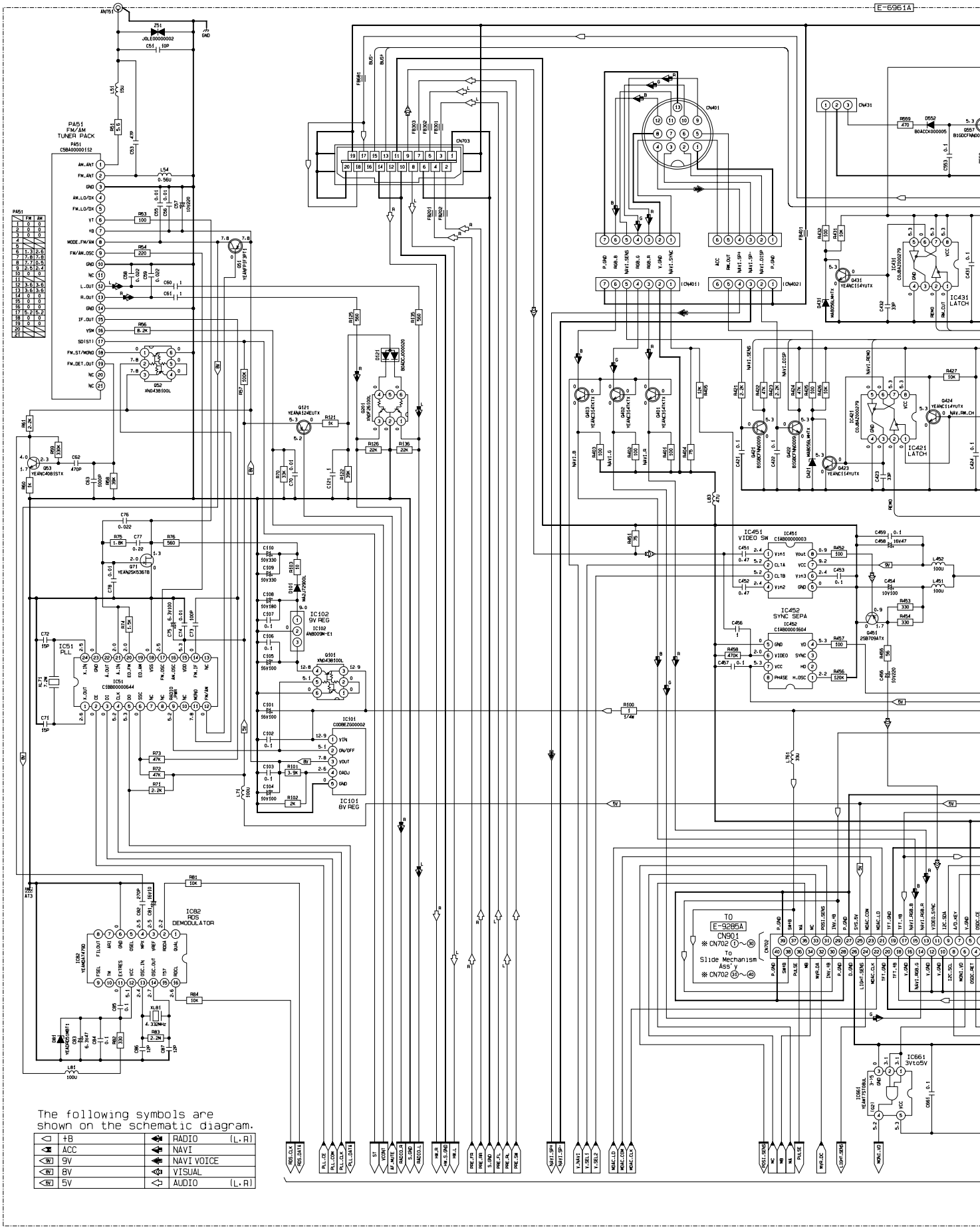

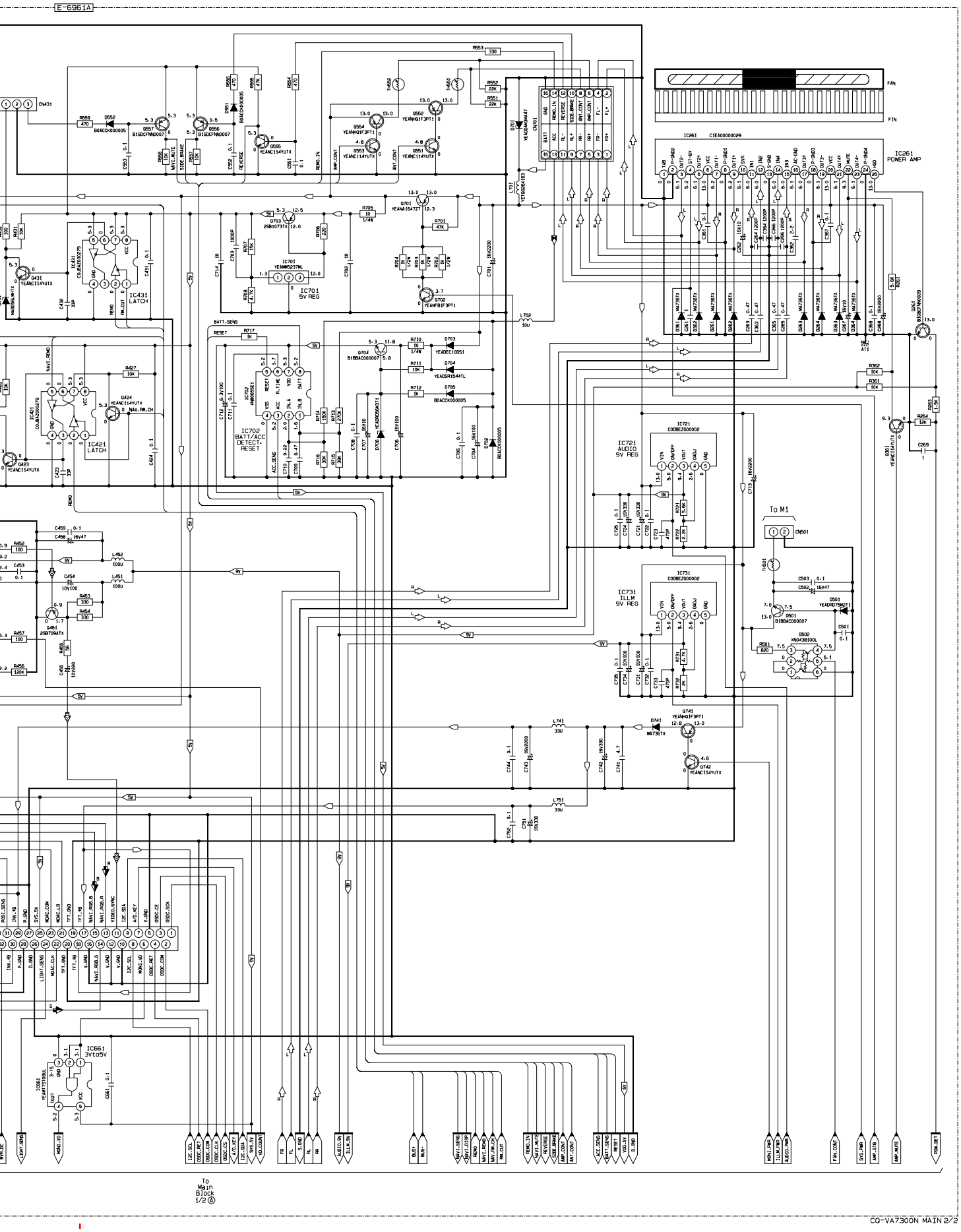
E-6961A
IC431
LATCH
IC421
LATCH
IC701
5V REG
IC702
BATT/ACC
DETECT-
RESET
IC721
AUDIO
9V REG
IC731
ILLM
9V REG
IC261
POWER AMP
IC661
3V to 5V
To M1
To
Main
Block
1/2 Ⓐ

17.3. TFT Block

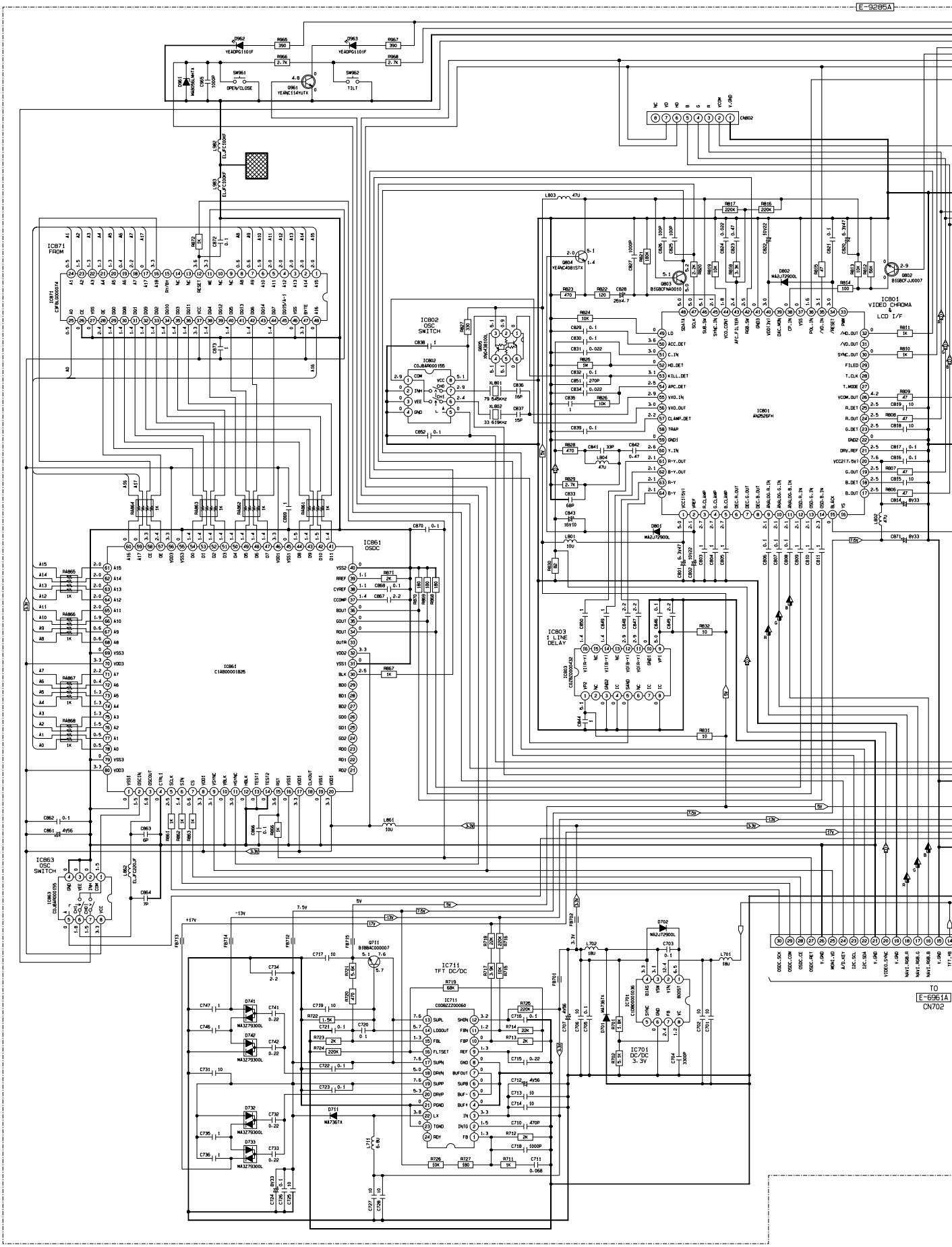

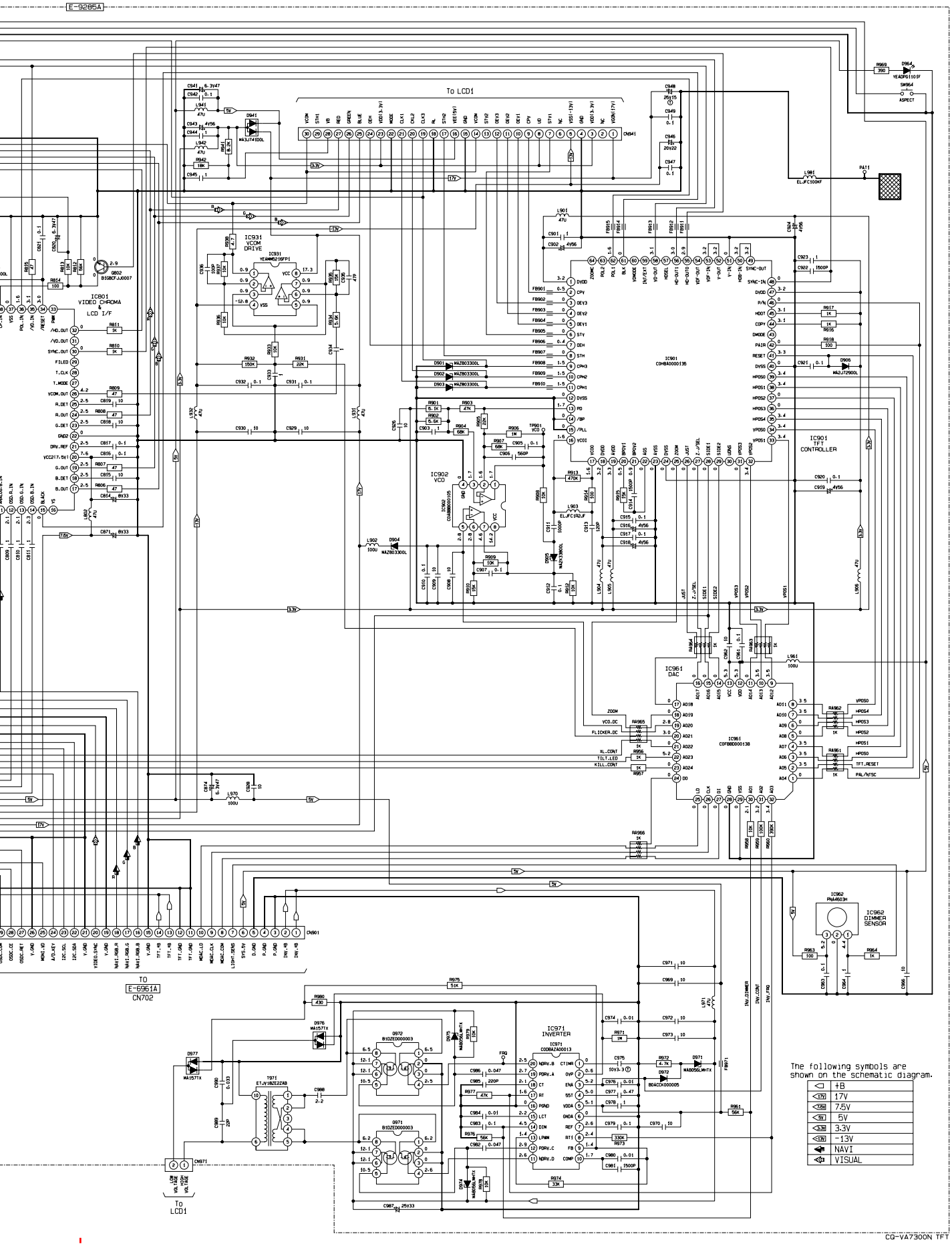
E-9285A
To LCD1
IC931 VCOM DRIVE
IC801 VIDEO CHROMA & LCD I/F
IC901 TFT CONTROLLER
IC902 VCO
IC961 DAC
IC962 DIMMER SENSOR
IC971 INVERTER
TO E-6961A CN702
CN901
CN671
To LCD1
The following symbols are shown on the schematic diagram.
+B
17V
7.5V
5V
3.3V
-13V
NAVI
VISUAL
CQ-VA7300N TFT

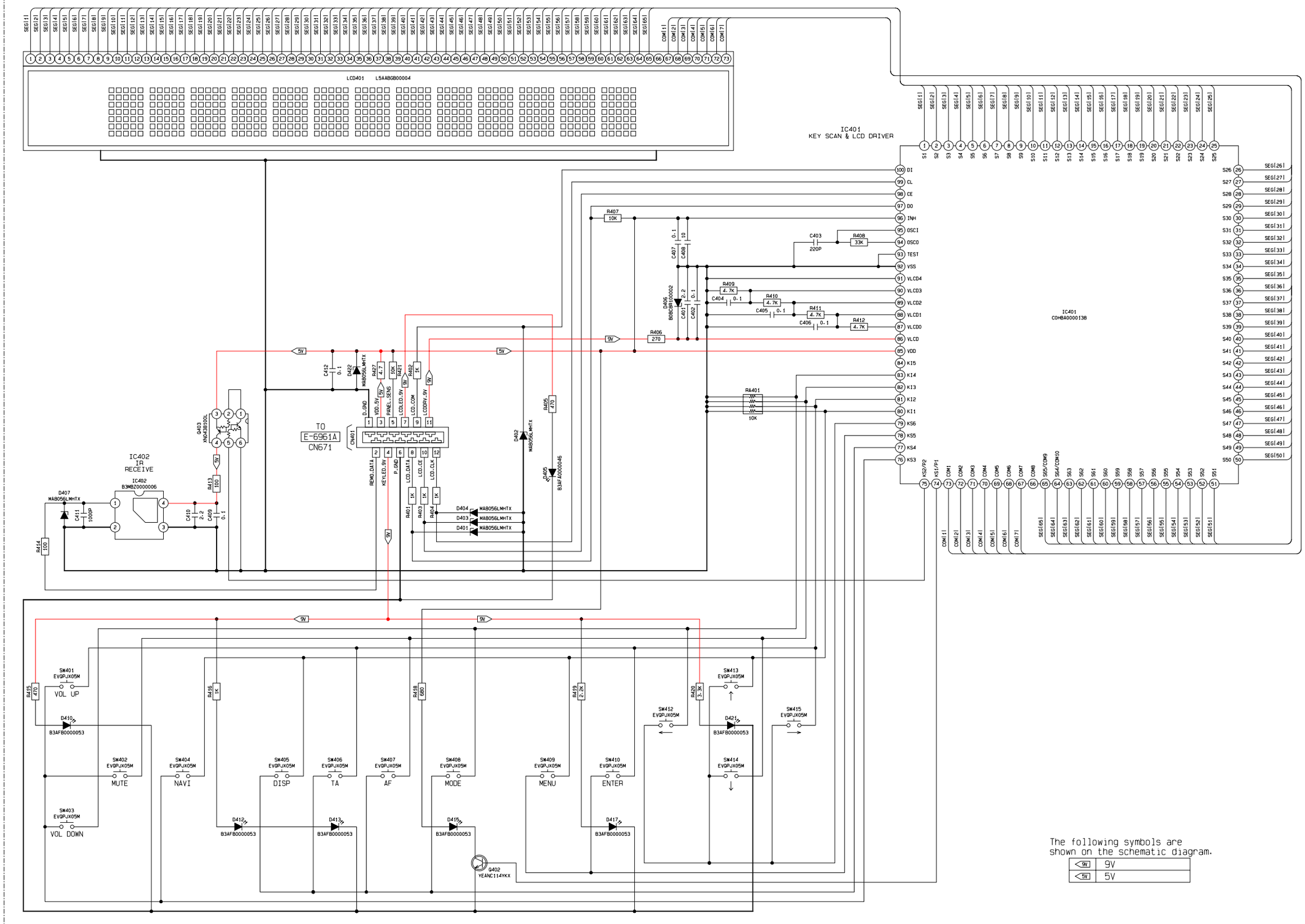
LCD401 L5AABGB00004
IC401
KEY SCAN & LCD DRIVER
IC401
C0HBA0000138
TO
E-6961A
CN671
CN401
IC402
IR
RECEIVE
IC402
B3MBZ0000006
Q403
XN04B9100L
D407
MAB056LMHTX
D402
MAB056LMHTX
D405
B3AFA0000046
D404
MAB056LMHTX
D403
MAB056LMHTX
D401
MAB056LMHTX
D406
B0BZB0000002
RA401
10K
SW401
EVQPJX05M
VOL UP
SW402
EVQPJX05M
MUTE
SW403
EVQPJX05M
VOL DOWN
SW404
EVQPJX05M
NAVI
SW405
EVQPJX05M
DISP
SW406
EVQPJX05M
TA
SW407
EVQPJX05M
AF
SW408
EVQPJX05M
MODE
SW409
EVQPJX05M
MENU
SW410
EVQPJX05M
ENTER
SW412
EVQPJX05M
SW413
EVQPJX05M
SW414
EVQPJX05M
SW415
EVQPJX05M
D410
B3AFB0000053
D412
B3AFB0000053
D413
B3AFB0000053
D415
B3AFB0000053
D417
B3AFB0000053
D421
B3AFB0000053
Q402
YEANC114YKX
The following symbols are
shown on the schematic diagram.
9V
5V

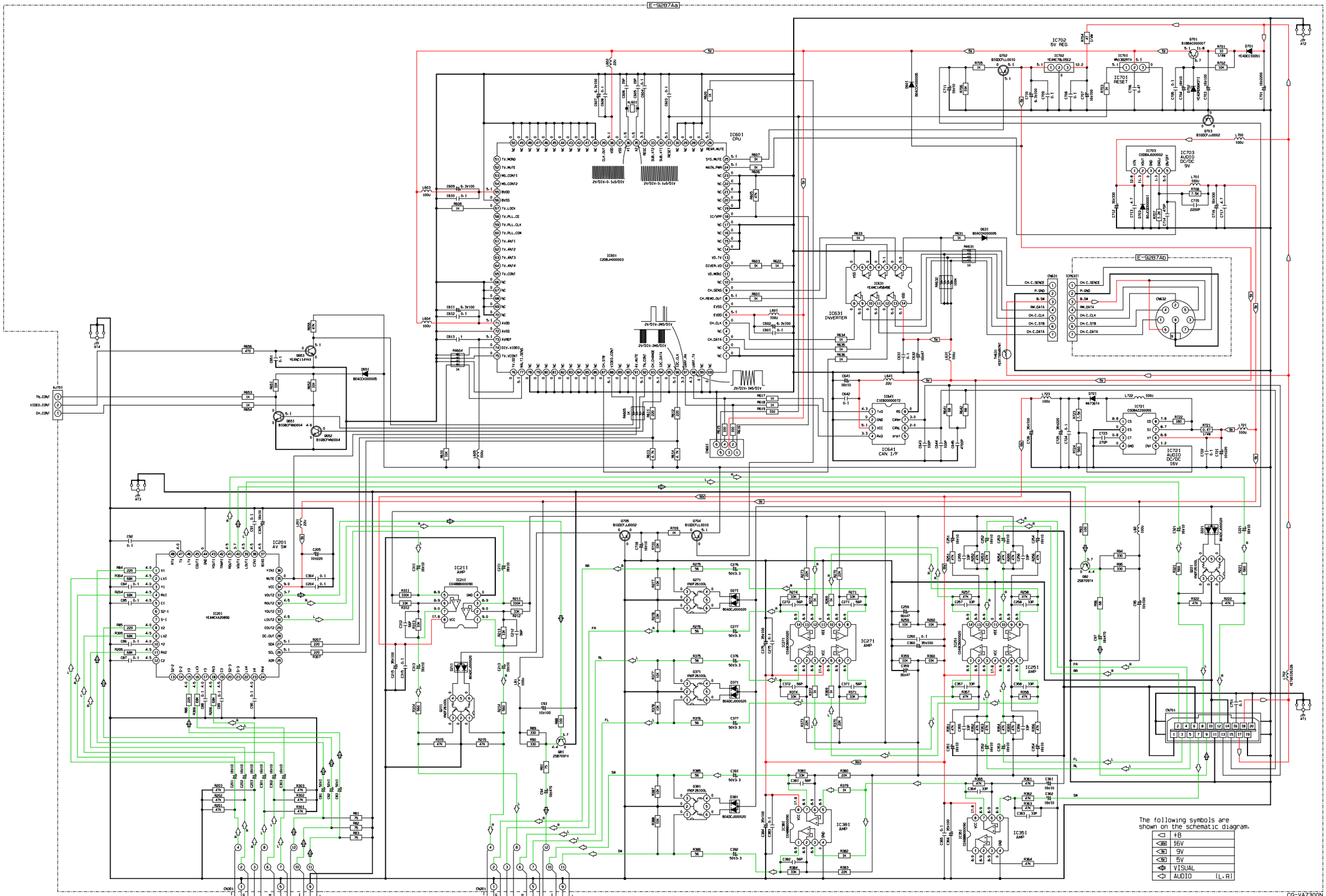

CQ-VA7300N
HIDEAWAY

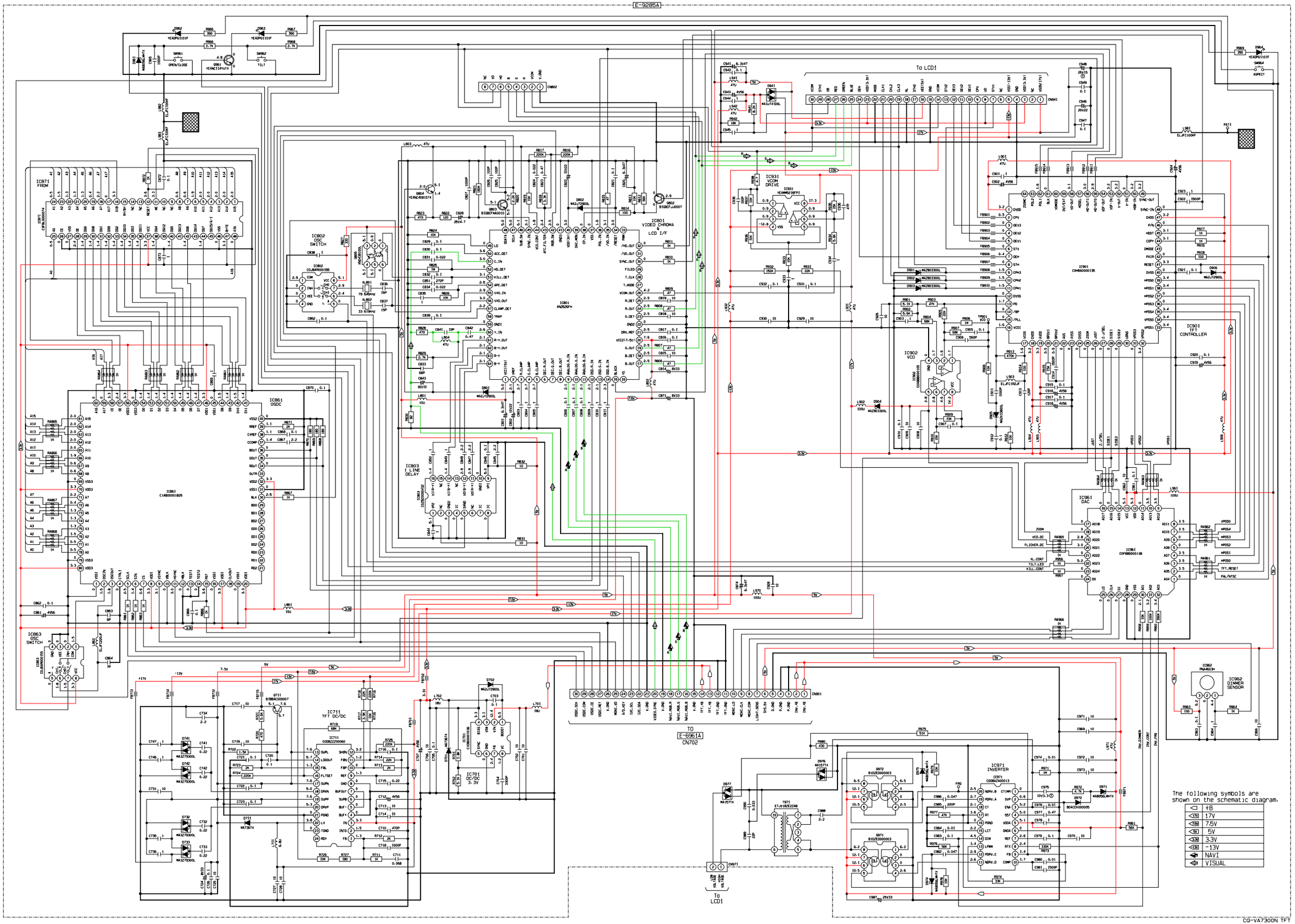
IC871 FROM
IC802 OSC SWITCH
IC861 OSDC
IC863 OSC SWITCH
IC803 1 LINE DELAY
IC801 VIDEO CHROMA LCD I/F
IC931 VCOM DRIVE
IC902 VCD
IC901 TFT CONTROLLER
IC961 DAC
IC962 DIMMER SENSOR
IC711 TFT DC/DC
IC701 DC/DC 3-3V
IC971 INVERTER
To LCD1
TO E-6961A CN702
The following symbols are shown on the schematic diagram.
+B
17V
7.5V
5V
3.3V
-13V
NAVI
VISUAL

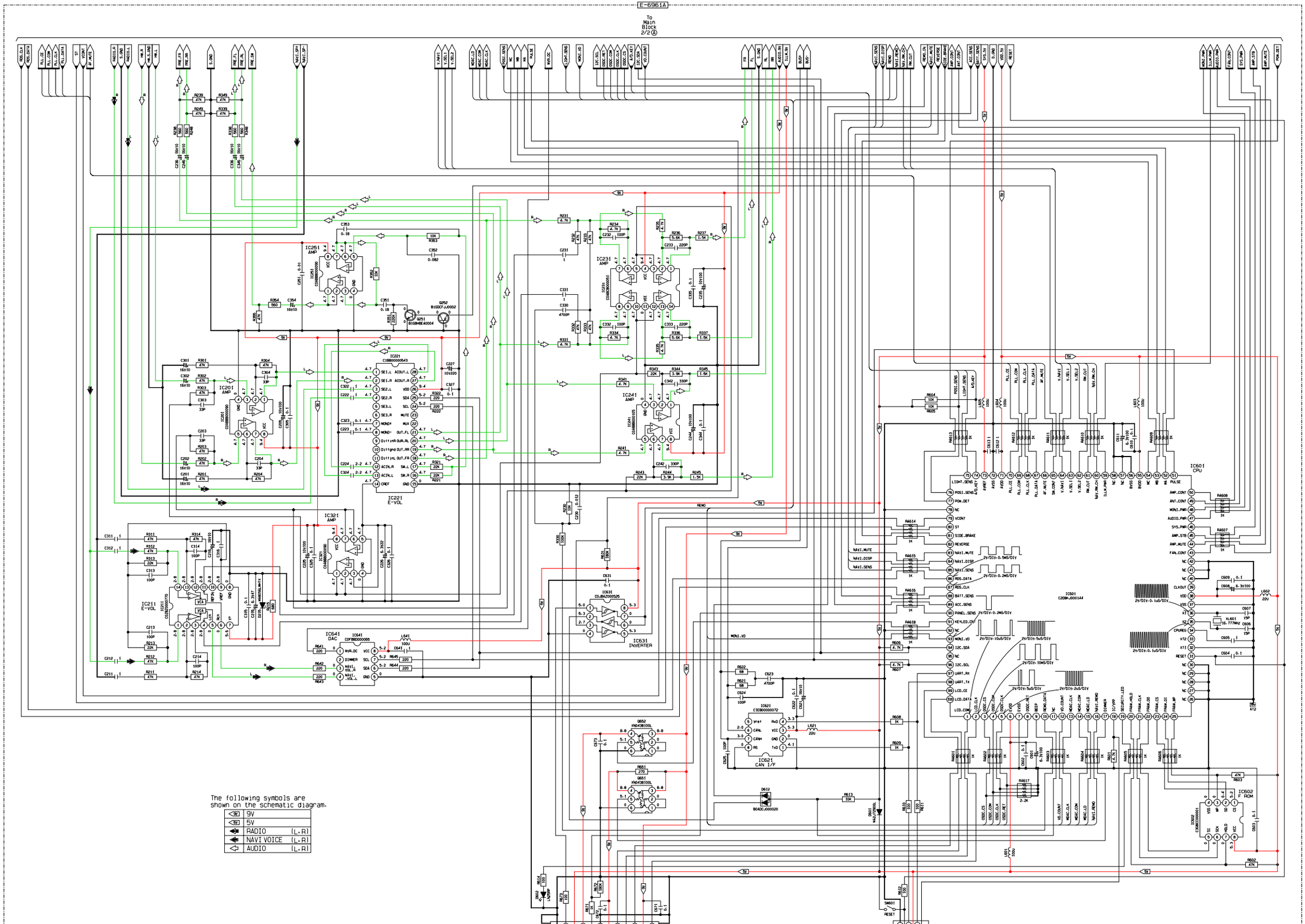
E-6961A
To Main Block 2/2
IC201 AMP
IC211 E-VOL
IC221 E-VOL
IC231 AMP
IC241 AMP
IC251 AMP
IC321 AMP
IC601 CPU
IC602 F ROM
IC621 CAN I/F
IC631 INVERTER
IC641 DAC
Q251
Q252
Q651
Q652
D612
D631
D641
D651
D652
L601
L602
L603
L604
L621
L641
XL601
CN401
CN601
CN671
S601
RESET
TO E-9286A CN401
The following symbols are shown on the schematic diagram.
9V
5V
RADIO (L.R)
NAVI VOICE (L.R)
AUDIO (L.R)
CQ-VA7300N
MAIN 1/2

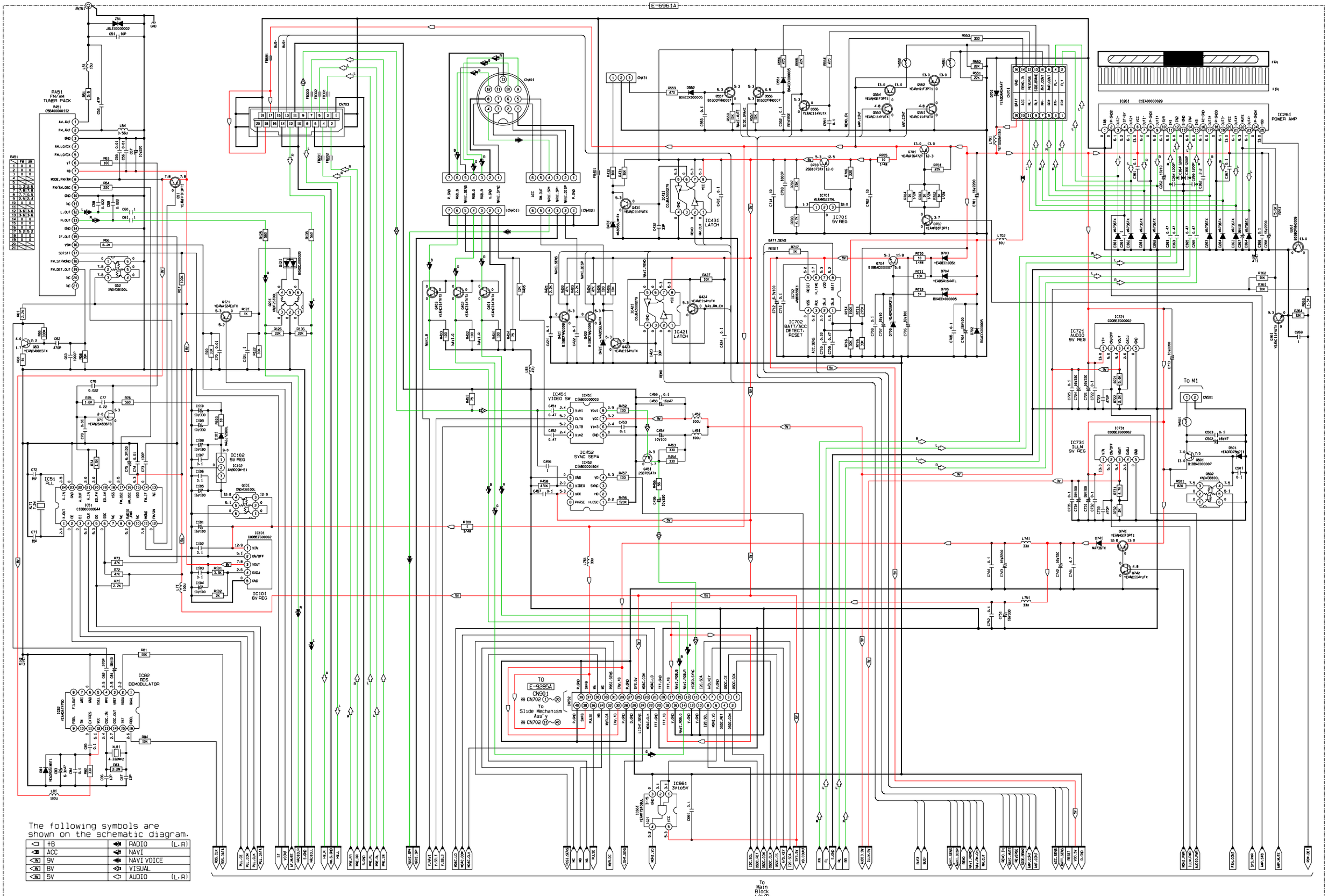
E-6961A
PA51
FM/AM
TUNER PACK
IC51
PLL
IC82
RDS
DEMODULATOR
IC102
9V REG
IC101
8V REG
IC101
CC0BEZ000002
IC451
VIDEO SW
IC452
SYNC SEPA
IC431
LATCH
IC421
LATCH
IC701
5V REG
IC702
BATT/ACC
DETECT-
RESET
IC721
AUDIO
9V REG
IC731
ILLM
9V REG
IC261
POWER AMP
IC661
3V to 5V
CN401
CN402
CN403
CN701
CN901
TO
E-9285A
CN901
※ CN702 1～30
To
Slide Mechanism
Ass'y
※ CN702 31～40
To M1
FAN
FIN
To
Main
Block
1/2 Ⓐ
The following symbols are
shown on the schematic diagram.
+B
ACC
9V
8V
5V
RADIO (L.R)
NAVI
NAVI VOICE
VISUAL
AUDIO (L.R)

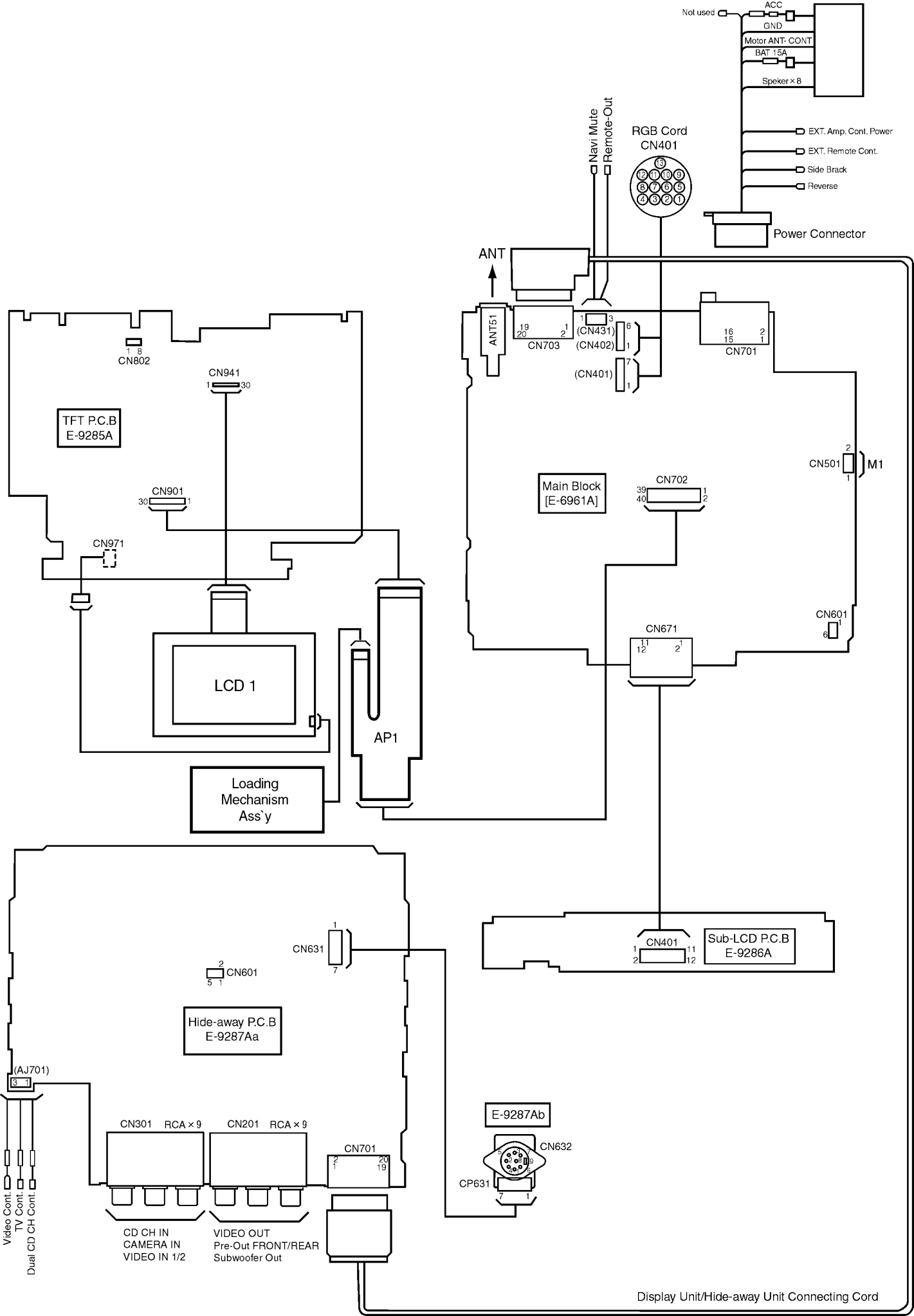
Not used
ACC
GND
Motor ANT- CONT
BAT 15A
Speker × 8
EXT. Amp. Cont. Power
EXT. Remote Cont.
Side Brack
Reverse
Power Connector
Navi Mute
Remote-Out
RGB Cord
CN401
ANT
ANT51
CN703
(CN431)
(CN402)
(CN401)
CN701
CN802
CN941
TFT P.C.B
E-9285A
CN901
CN971
Main Block
[E-6961A]
CN702
CN501
M1
CN601
CN671
LCD 1
AP1
Loading
Mechanism
Ass`y
CN401
Sub-LCD P.C.B
E-9286A
CN631
CN601
Hide-away P.C.B
E-9287Aa
(AJ701)
CN301
RCA × 9
CN201
RCA × 9
CN701
E-9287Ab
CN632
CP631
Video Cont.
TV Cont.
Dual CD CH Cont.
CD CH IN
CAMERA IN
VIDEO IN 1/2
VIDEO OUT
Pre-Out FRONT/REAR
Subwoofer Out
Display Unit/Hide-away Unit Connecting Cord

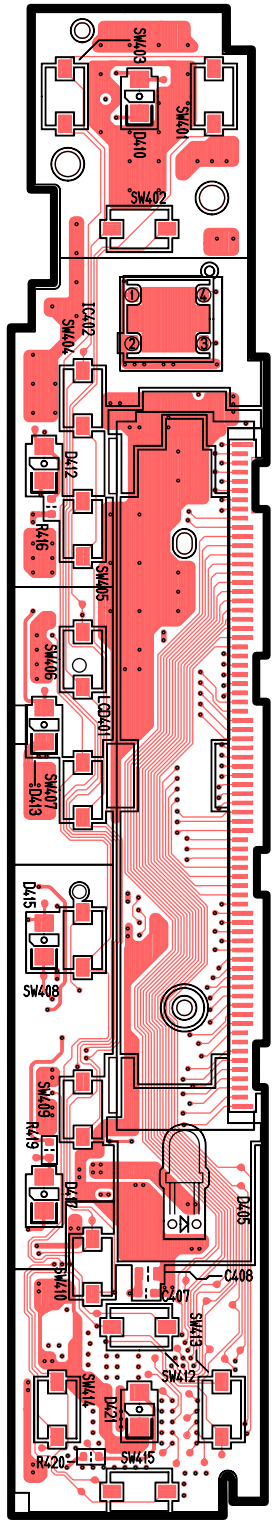

[E-9286A] [Top View]

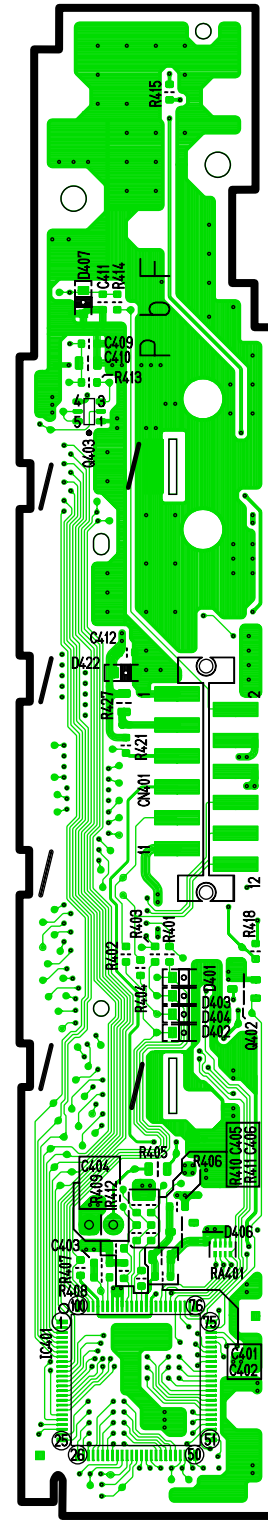

[E-9286A] [Bottom View]

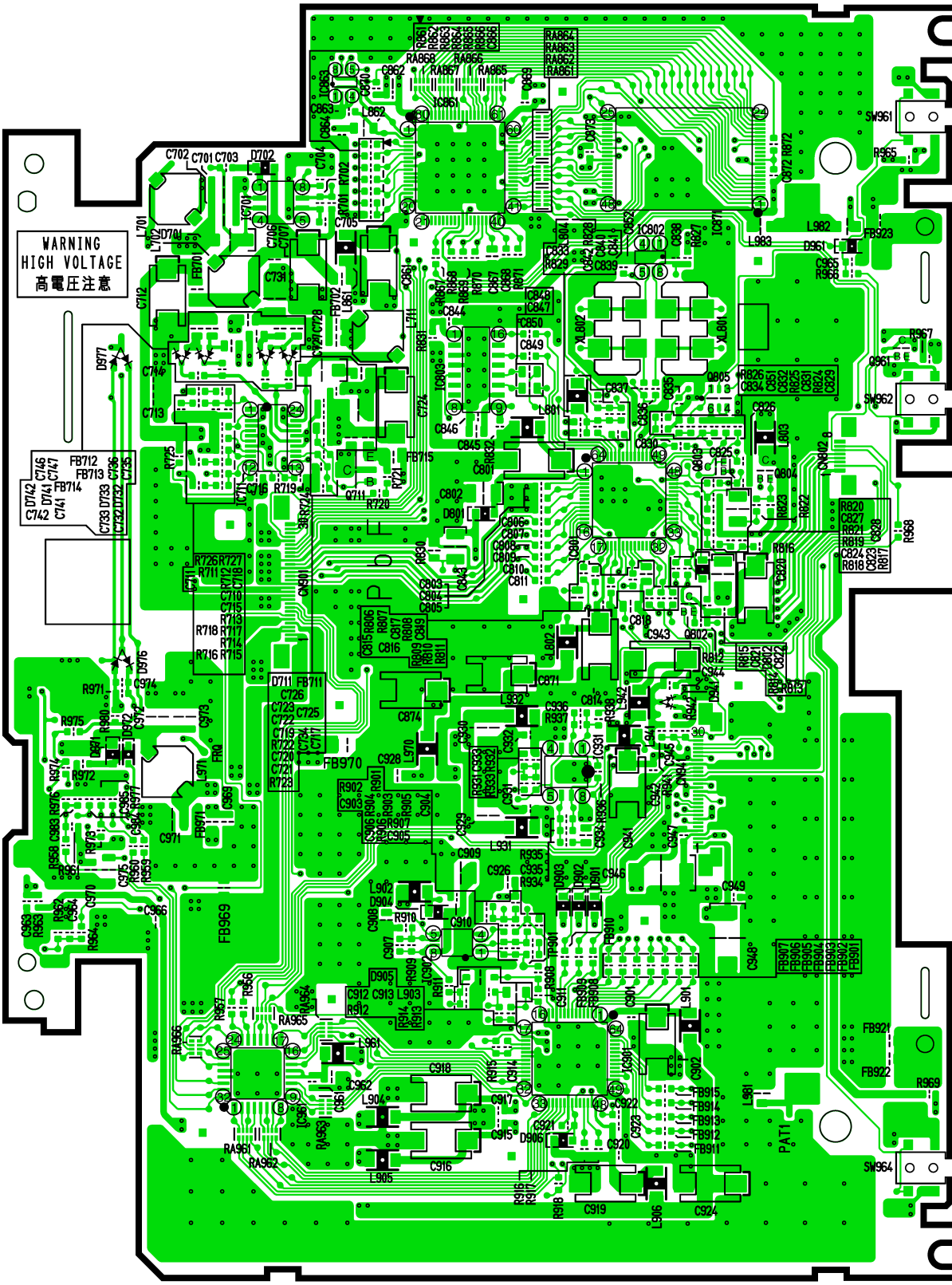

[E-9285A] [Bottom View]

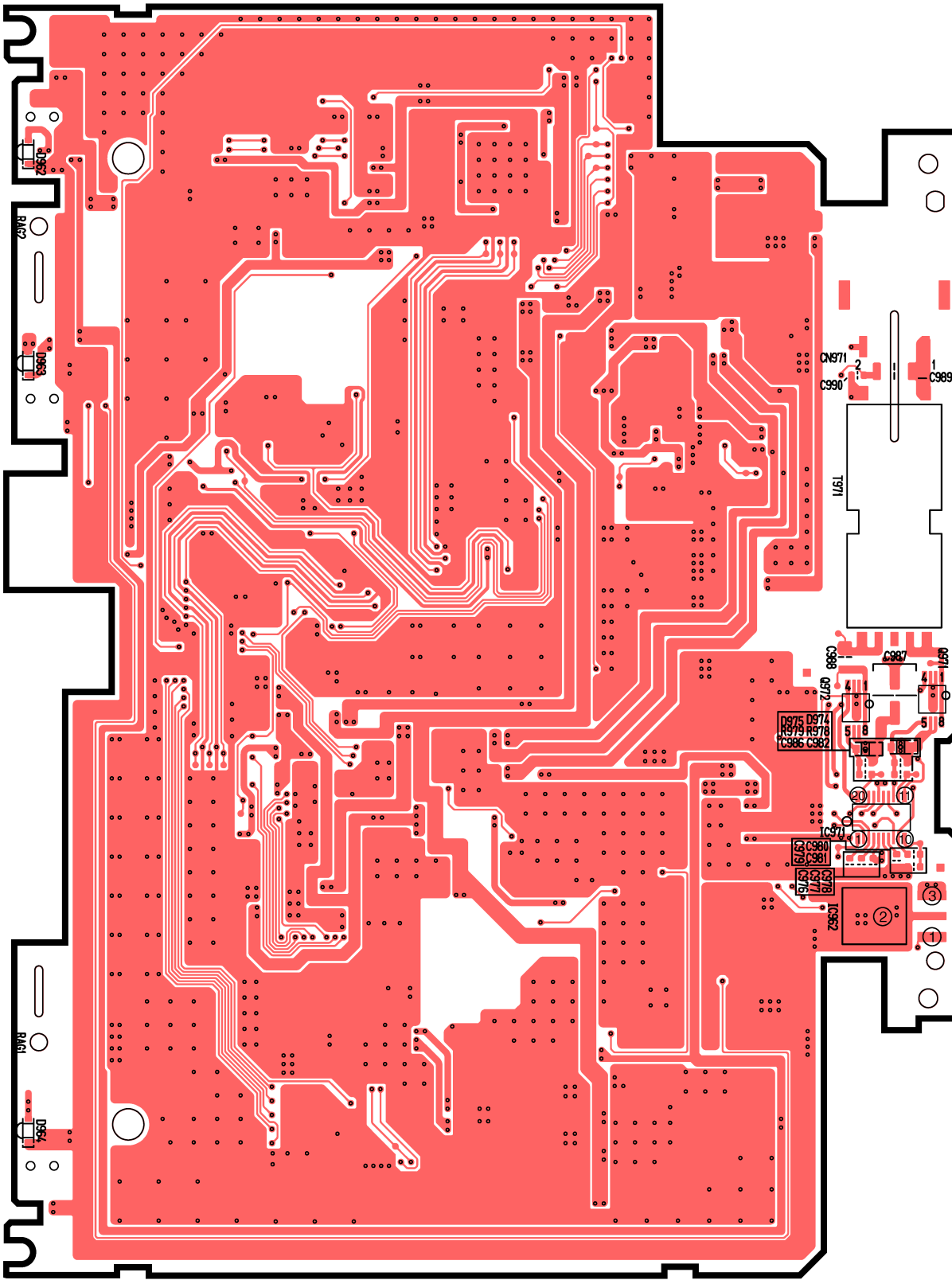

[E-9285A] [Top View]

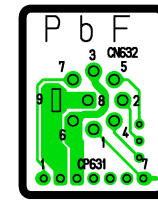

[E-9287Ab]
[Bottom View]

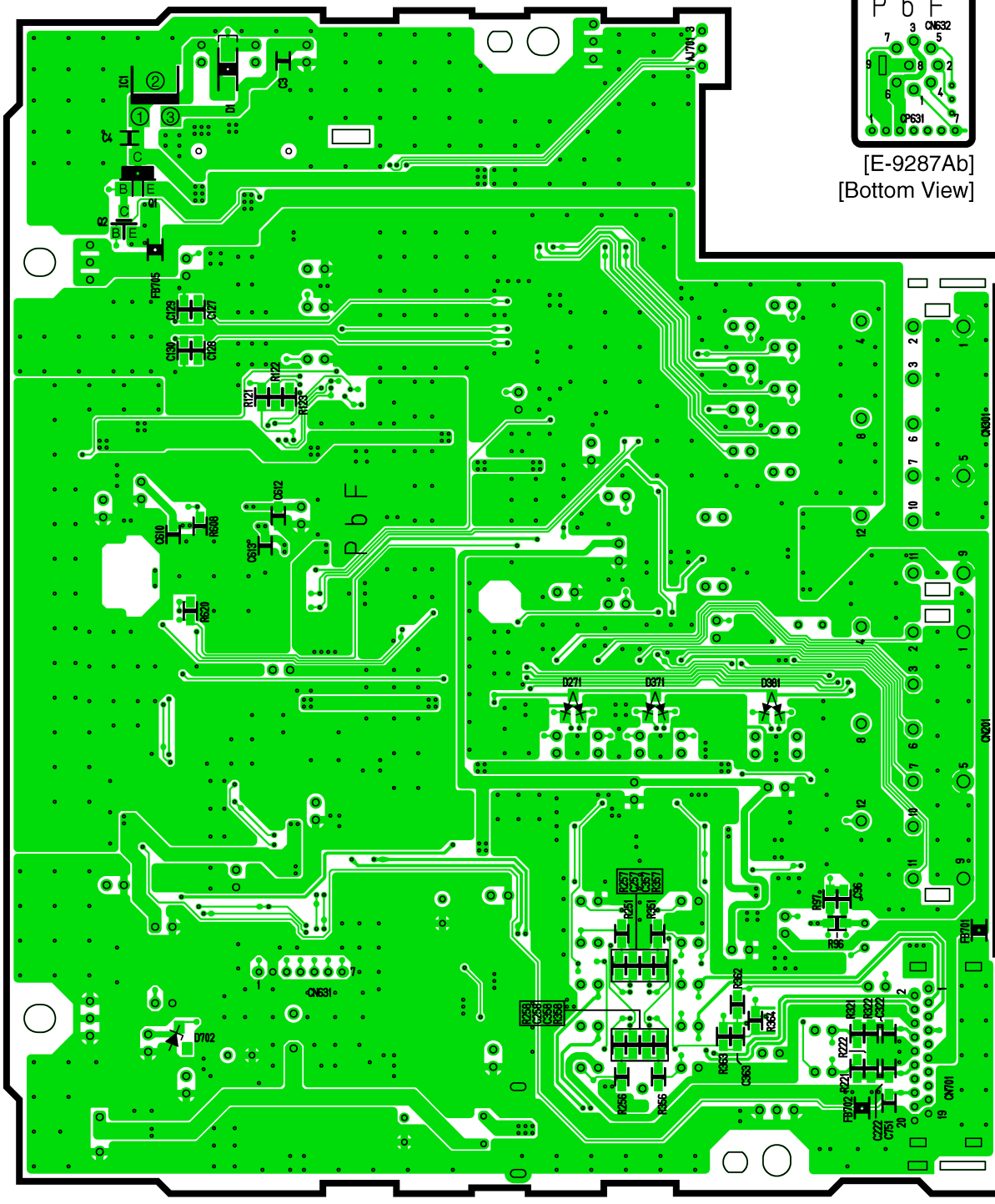

[E-9287Aa] [Bottom View]

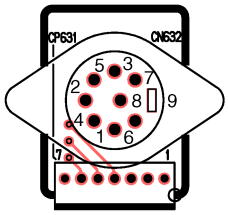

[E-9287Ab]
[Top View]

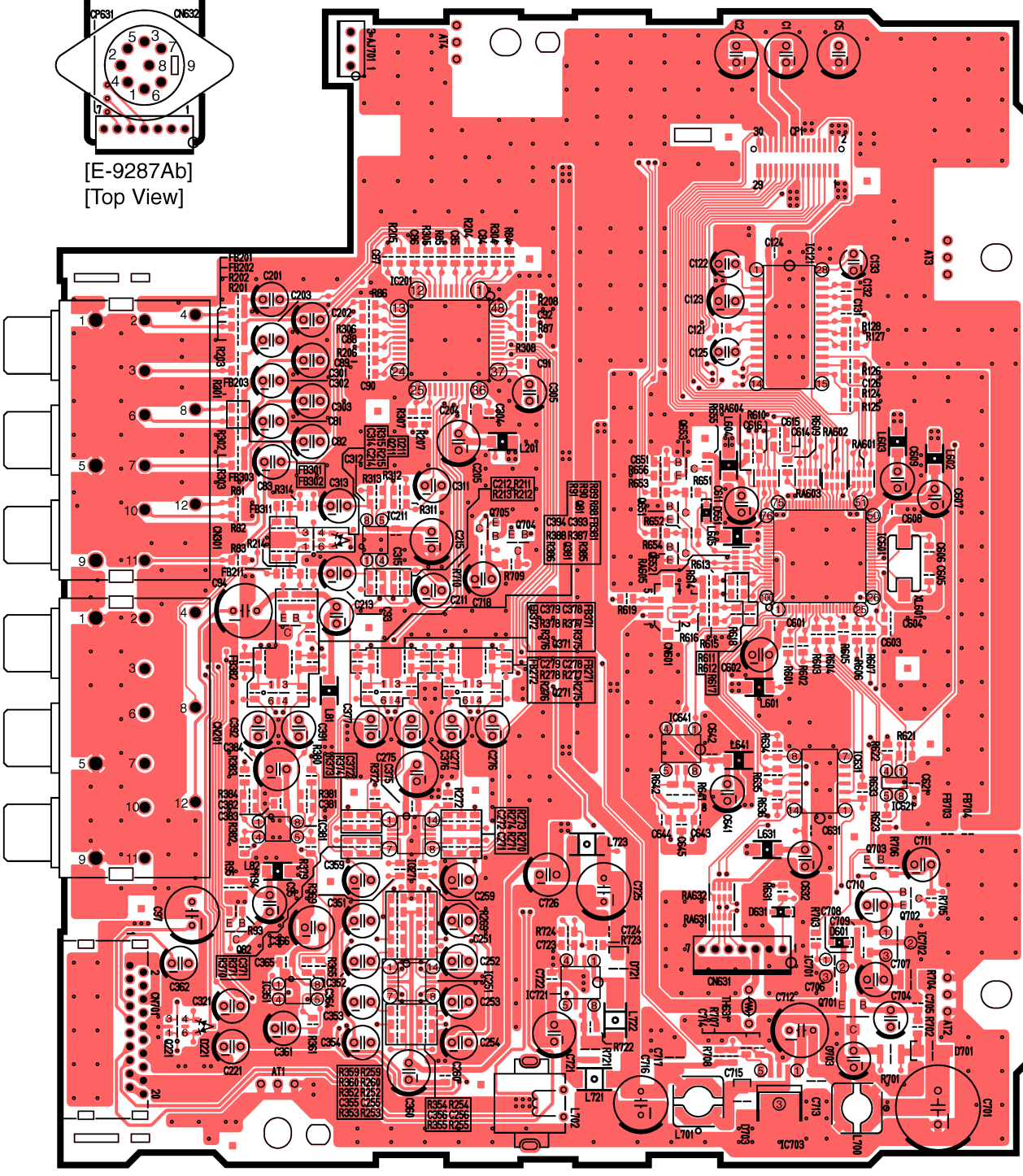

[E-9287Aa] [Top View]

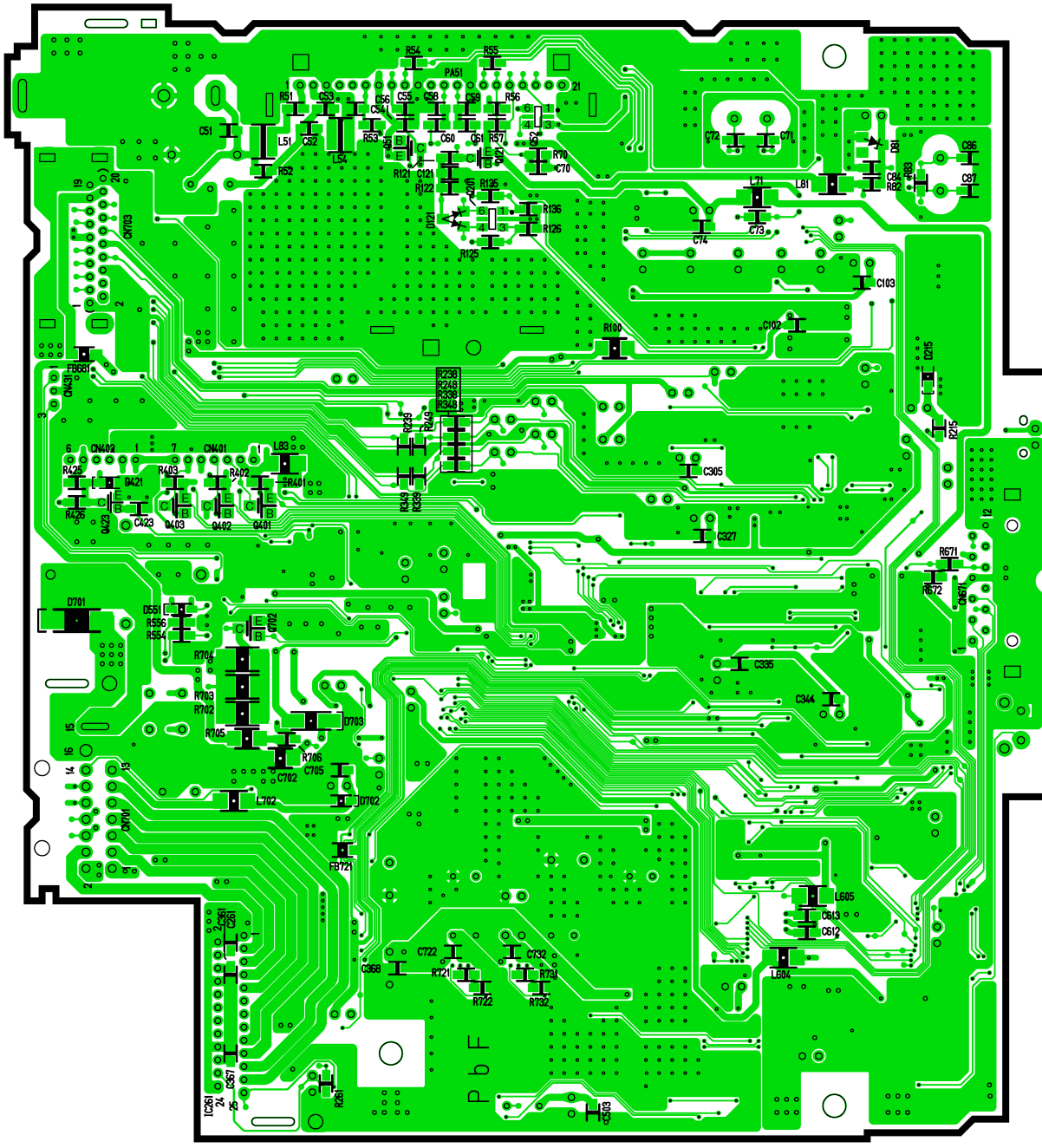

[E-6961A] [Bottom View]

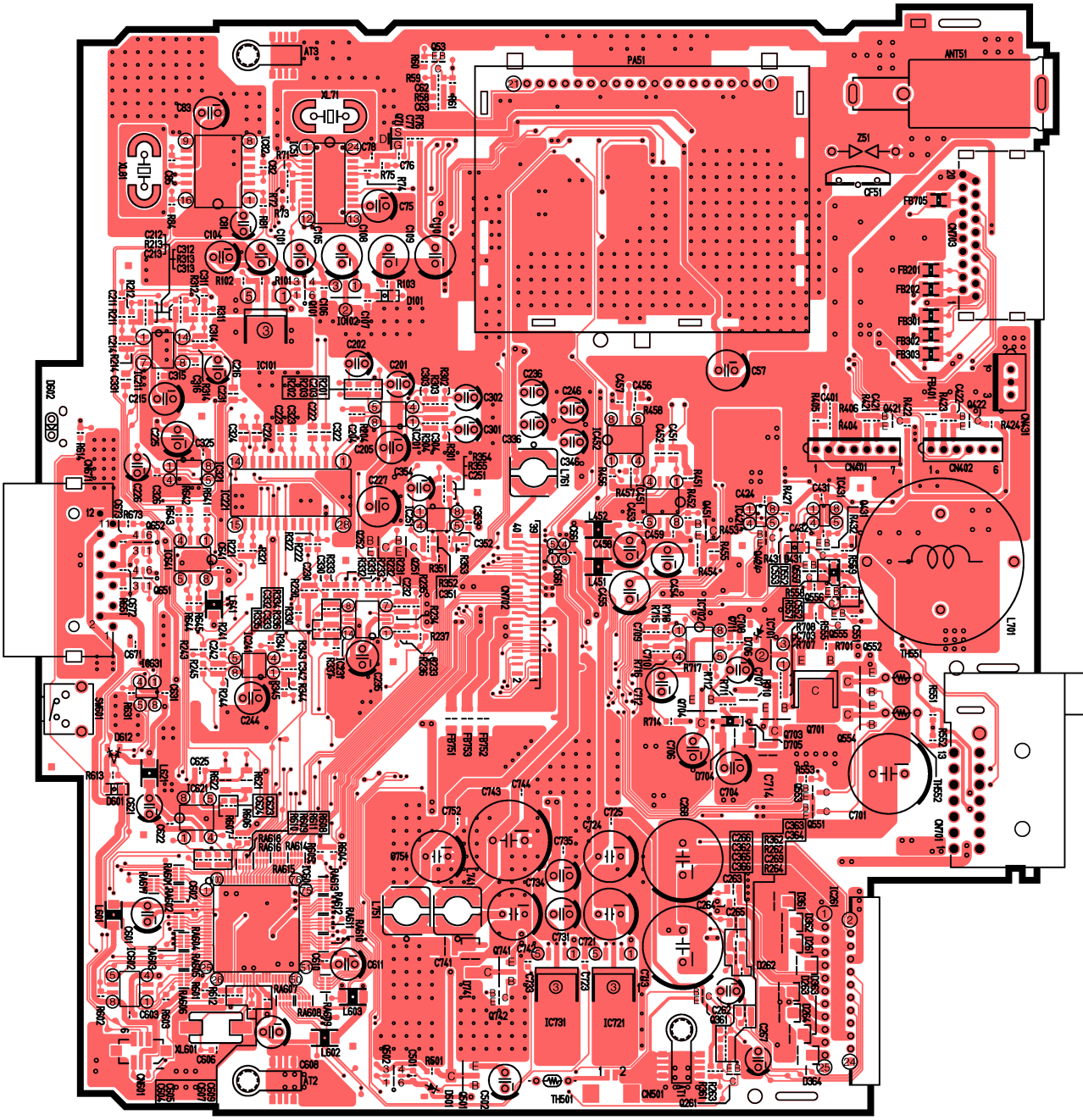

[E-6961A] [Top View]