UM-141EX1
UM-142EX1

FUJITSU TEN SERVICE MANUAL

POWER AMPLIFIER
UM-141EX1
UM-142EX1

POWER AMPLIFIER (100W)

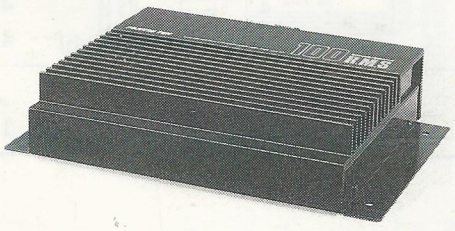

<UM-141EX1>

POWER AMPLIFIER (200W)

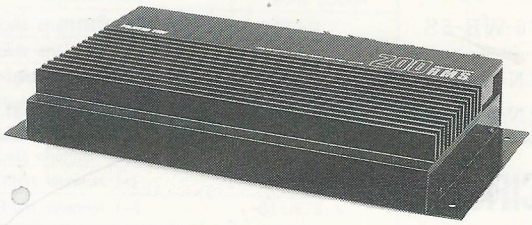

<UM-142EX1>

TABLE OF CONTENTS

COMPOSITIONS • SPECIFICATIONS 2
CONNECTIONS • HOOK-UP 3, 4
SCHEMATIC [UM-141EX1] 5, 6
WIRING ON PC BOARD [UM-141EX1] 7, 8
SCHEMATIC [UM-142EX1] 9, 10
WIRING ON PC BOARD [UM-142EX1] 11, 12
EXPLODED VIEW 13, 14
REPLACEMENT PARTS LIST 15-18

COMPOSITION

Parts No.	Description	Q'ty	
		UM-141EX1	UM-142EX1
UM-141	Power amplifier unit	1	
UM-142	Power amplifier unit		1
RN-EWJ-5045	Wire, BATT.	1	
RN-EWJ-5046	Wire, BATT.	1	
RN-EWJ-4444	Wire, BATT.		1
RN-EWJ-4445	Wire, BATT.		1
RN-EWJ-5097	Wire, ACC	1	1
RN-EWJ-5047	Wire, RCA	2	2
RN-EWJ-5048	Wire, control	1	1
RN-EWJ-5049	Wire, speaker	1	1
RN-MTN-A6×16	Screw, 6×16mm	4	4
RN-MBW-C5×12S	Bolt, 5×12mm	1	1
RN-MNR-D5S	Nut, 5mm	1	1
F6-WM-6S	Washer, 6mm	4	4
F6-WB-6S	Washer, 6mm	4	4
RN-MXT-2126	Installation manual	1	
RN-MXT-2154	Installation manual		1

SPECIFICATIONS

ITEM	UM-141EX1	UM-142EX1
POWER OUTPUT	40 watts or better×2 (THD=10%)	75 watts or better×2 (THD=10%)
INPUT IMPEDANCE	10k ohm	10k ohm
SPEAKER IMPEDANCE	4 ohm per channel	4 ohm per channel
POWER SUPPLY	13.2 VDC	13.2 VDC
CURRENT	Approx. 1A (No signal)	Approx. 2A (No signal)
CURRENT	Approx. 25A (Max.)	Approx. 55A (Max.)
SEMICONDUCTORS	6 ICs, 29 transistors, 22 diodes	6 ICs, 35 transistors, 31 diodes
DEMENSIONS	305(W)×63(H)×208(D)mm	415(W)×63(H)×208(D)mm
WEIGHT	Approx. 3.5 kg	Approx. 5.2 kg

MATCHING OF INPUT SENSITIVITY

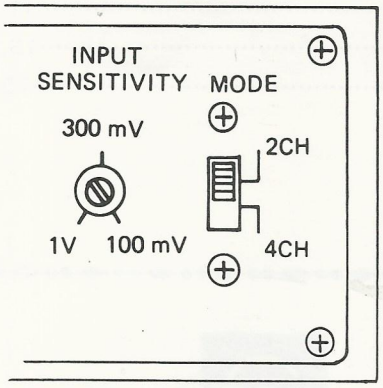

POWER AMPLIFIER

Fig. 1

Before connecting the power amplifier to cassette receiver, set the input sensitivity volume of this unit with a (−) screw driver as follows :

TEN brand cassette receiver		
L series	M & K series	Other receivers
Set to "100mV"	Set to "300mV"	Set to "1V"

CONNECTION 〔UM-141EX1〕

Connect all connectors as shown in Fig. 5, 6 & 7.

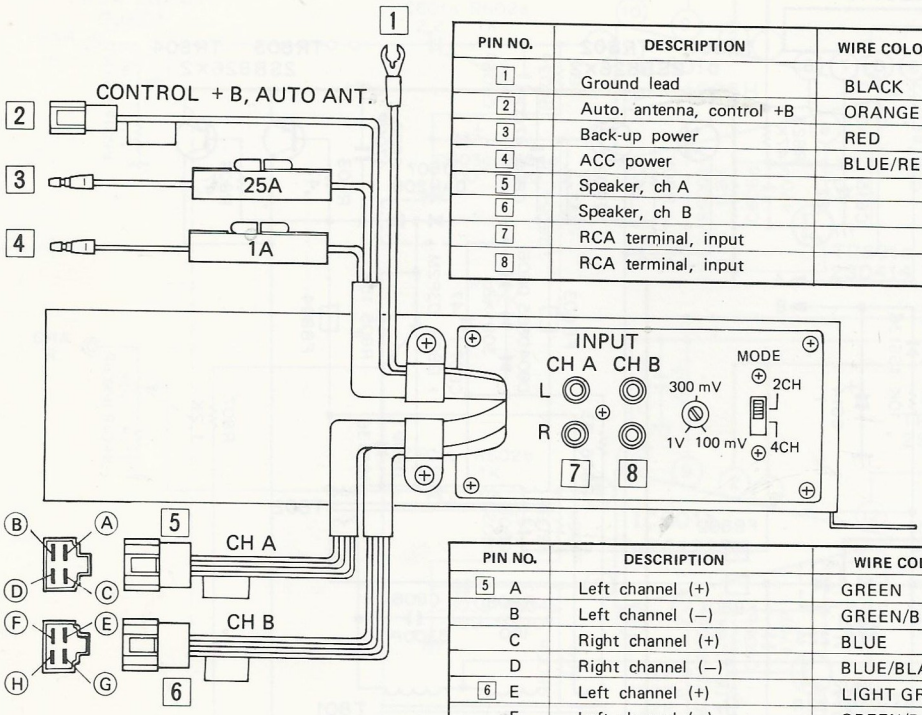

PIN NO.	DESCRIPTION	WIRE COLOR
1	Ground lead	BLACK
2	Auto. antenna, control +B	ORANGE
3	Back-up power	RED
4	ACC power	BLUE/RED
5	Speaker, ch A	
6	Speaker, ch B	
7	RCA terminal, input	
8	RCA terminal, input	

PIN NO.	DESCRIPTION	WIRE COLOR
5 A	Left channel (+)	GREEN
B	Left channel (–)	GREEN/BLACK
C	Right channel (+)	BLUE
D	Right channel (–)	BLUE/BLACK
6 E	Left channel (+)	LIGHT GREEN
F	Left channel (–)	GREEN/BLK
G	Right channel (+)	LIGHT BLUE
H	Right channel (–)	BLUE/BLK

Fig. 2

CONNECTION 〔UM-142EX1〕

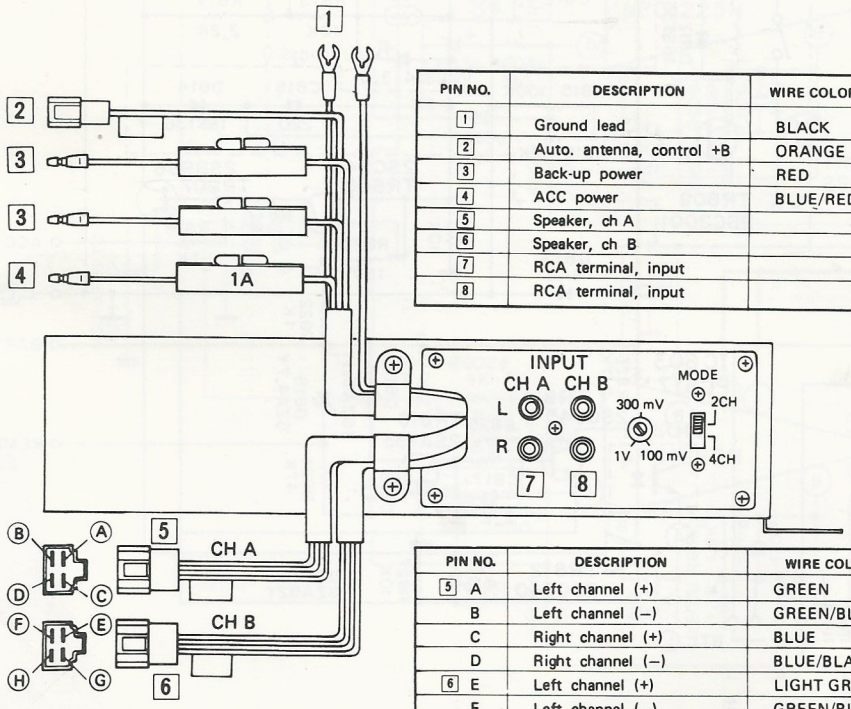

PIN NO.	DESCRIPTION	WIRE COLOR
1	Ground lead	BLACK
2	Auto. antenna, control +B	ORANGE
3	Back-up power	RED
4	ACC power	BLUE/RED
5	Speaker, ch A	
6	Speaker, ch B	
7	RCA terminal, input	
8	RCA terminal, input	

PIN NO.	DESCRIPTION	WIRE COLOR
5 A	Left channel (+)	GREEN
B	Left channel (–)	GREEN/BLACK
C	Right channel (+)	BLUE
D	Right channel (–)	BLUE/BLACK
6 E	Left channel (+)	LIGHT GREEN
F	Left channel (–)	GREEN/BLK
G	Right channel (+)	LIGHT BLUE
H	Right channel (–)	BLUE/BLK

Fig. 3

HOOK-UP 〔UM-141EX1〕

Cassette Receiver plus Power Amplifier

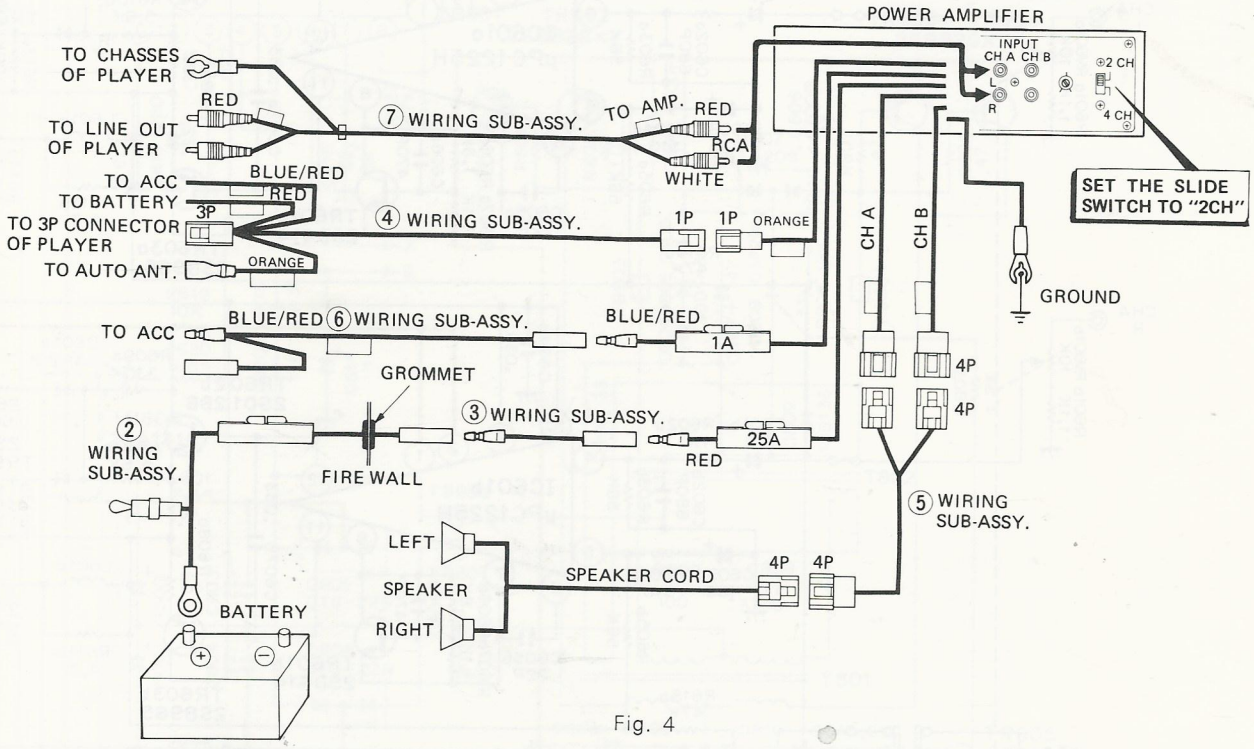

Fig. 4

HOOK-UP 〔UM-142EX1〕

Cassette Receiver plus Power Amplifier

NOTE: Please refer to "Installation Instructions" packed in each cassette receiver respectively.

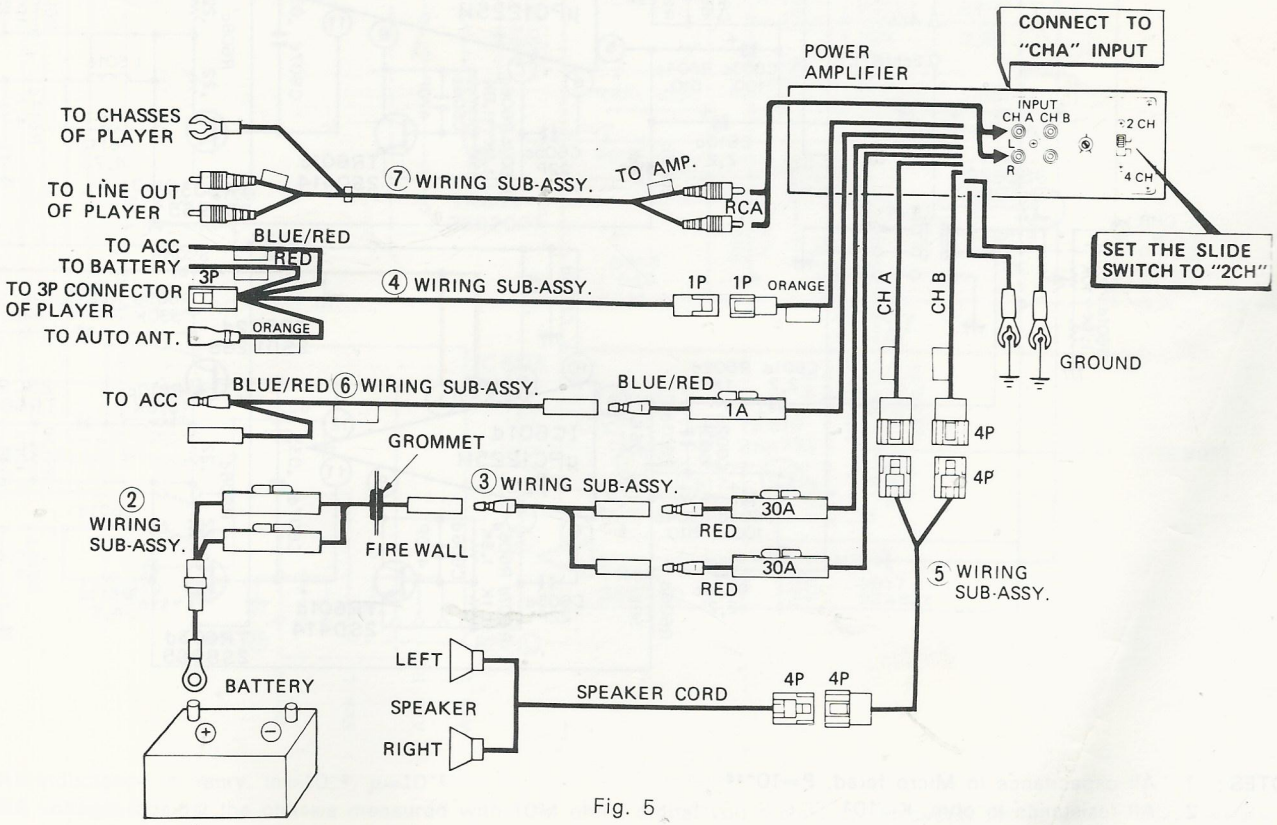

Fig. 5

EXPLODED VIEW 〔UM-141〕

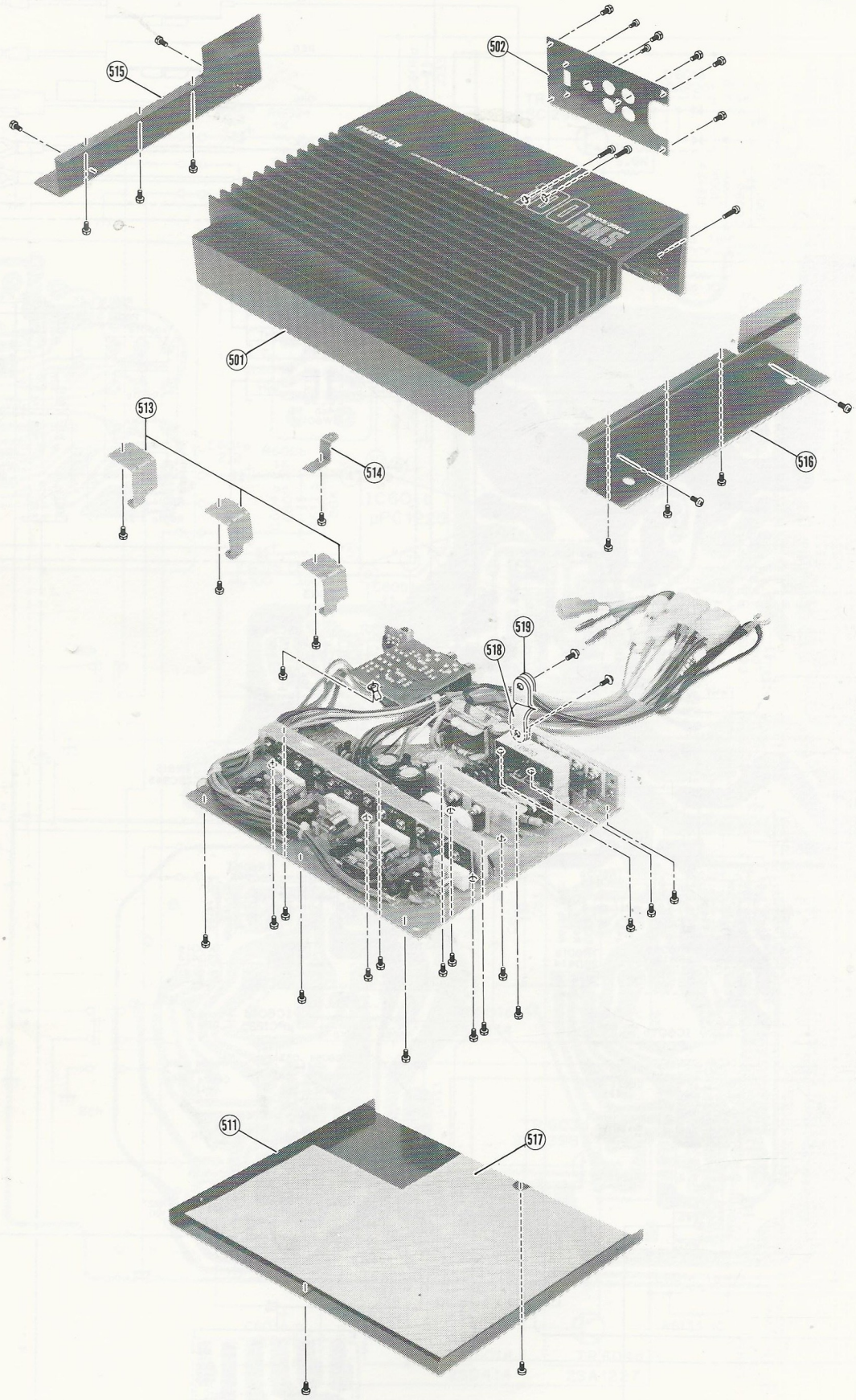

Fig. 10

NOTE : Printed circuit board does not include component parts to be mounted.

EXPLODED VIEW (UM-142)

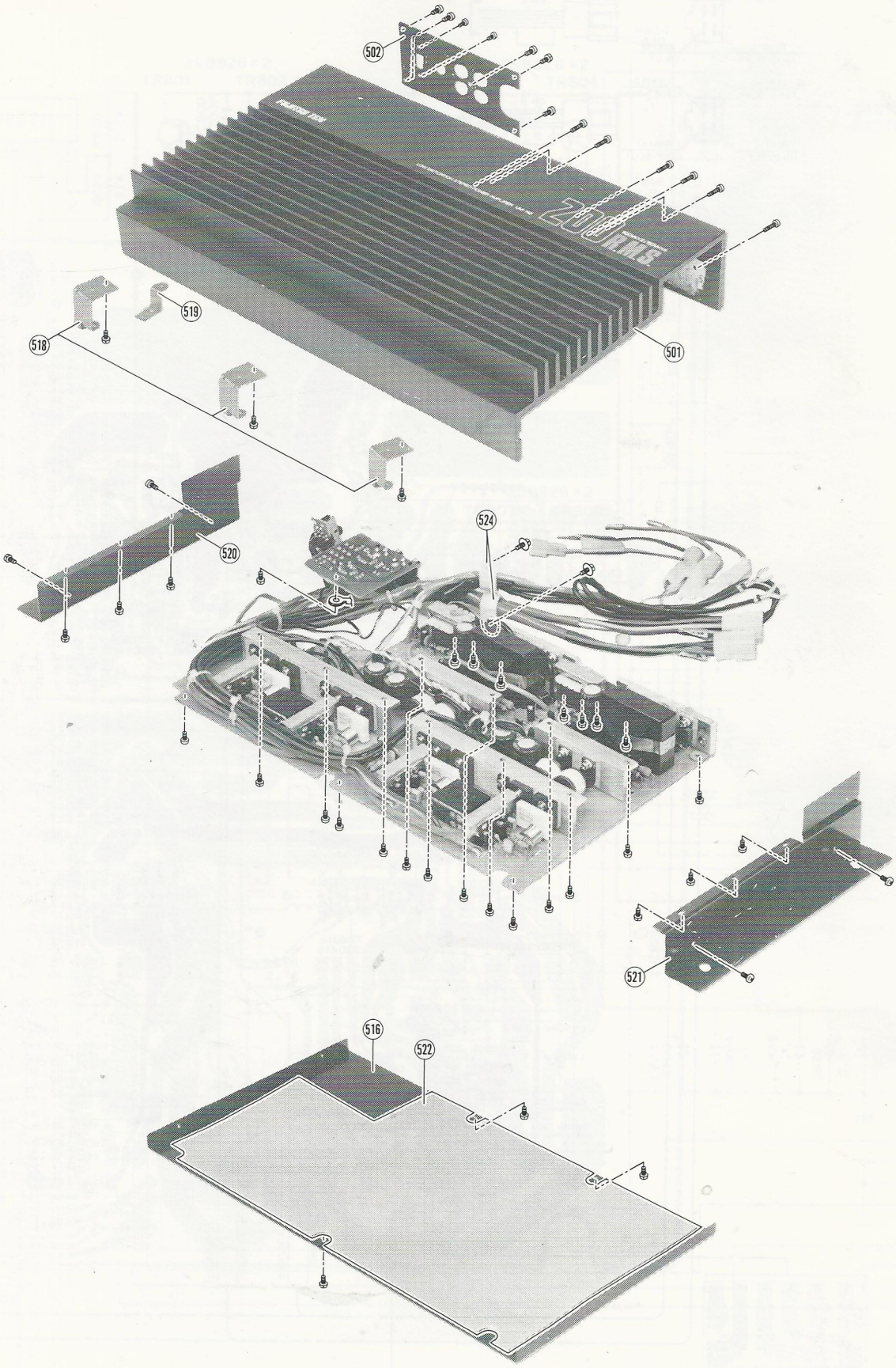

Fig. 11

NOTE : Printed circuit board does not include component parts to be mounted.

REPLACEMENT PARTS LIST

Note:Main replacement parts are marked O in the remarks column.

Symbol. No.	Stock No.	Parts name	Description Chip:(C)	Remark
CAPACITORS			Unit:μF, P=pF	
C601	RN-ECE-M2R2V50-9	Electrolytic	2.2 50 V	
C602	RN-ECK-DB681KY	Ceramic	680 p	
C603	RN-ECE-M101V10	Electrolytic	100 10 V	
C604	RN-ECF-R333J50	Mylar	.033 50 V	
C605	RN-ECC-DSL220JY	Ceramic	22 p 50 V	
C606	RN-ECK-DB471KY	Ceramic	470 p	
C607,609	RN-ECF-R333V50-JZ	Mylar	.033 50 V	
C608	RN-ECE-M101V10-5	Electrolytic	100 10 V	
C609	RN-ECF-R333V50-JZ	Mylar	.033 50 V	
C610	RN-ECE-M2R2V50-N1	Electrolytic	2.2 50 V	
C611	RN-ECB-DBC473E	Ceramic	.047 25 V	
C612	RN-ECB-DBC104E-1	Ceramic	.1 25 V	
C613	RN-ECE-M221V10-31	Electrolytic	220 10 V	
C614	RN-ECE-M1R0V50-51	Electrolytic	1 50 V	
C615	RN-ECE-M220V25-51	Electrolytic	22 25 V	
C616	RN-ECK-DF223K	Ceramic	.022	
C801,802	RN-ECE-M152V35	Electrolytic	1500 35 V	
C803,804	RN-ECH-R224V100-J	M.P.	.22 100V	
C805,806	RN-ECK-DFZ472Z	Ceramic	4700p 50 V	
C807	RN-ECE-M470V16-51	Electrolytic	47 16 V	
C808	RN-ECF-R332V100-2	Mylar	3300p 100V 1/8W	
C809	RN-ECE-M472V16	Electrolytic	4700 16 V	
C810	RN-ECB-DBC104E-1	Ceramic	.1 25 V	
C811	RN-ECE-M2R2V50-52	Electrolytic	2.2 50 V	
C812	RN-ECB-DBC104E-1	Ceramic	.1 25 V	
C813	RN-ECE-M100V16-1	Electrolytic	10 16 V	
C814	RN-ECE-M3R3V50-51	Electrolytic	3.3 50 V	
C816	RN-ECK-DFZ103Z	Ceramic	.01 50 V	
C817	RN-ECE-M2R2V50-9	Electrolytic	2.2 50 V	
C818	RN-ECB-DBC104E-1	Ceramic	.1 25 V	
RESISTORS			Unit:ohm, K=kohm	
R601,807	RN-ERD-AC563JA	Carbon	56 K 5% 1/8W	
R602,817,818 822	RN-ERD-AC102JA	Carbon	1 K 5% 1/8W	
R603,605,615 812	RN-ERD-AC563JA	Carbon	56 K 5% 1/8W	
R604	RN-ERD-AC511JA	Carbon	510 5% 1/8W	
R606	RN-ERD-AC182JA	Carbon	1.8K 5% 1/8W	
R608	RN-ERI-1048-02R22K	Resistor arrey	.22 x 2	
R609,809	RN-ERD-AC334JA	Carbon	330K 5% 1/8W	
R610,622	RN-ERD-AC562JA	Carbon	5.6K 5% 1/8W	
R611,614	RN-ERG-AE4R7JV-NF	Metallic	4.7 5% 1/4W	
R612	RN-ERD-AC683JA	Carbon	68 K 5% 1/8W	
R613	RN-ERD-AC104JA	Carbon	100K 5% 1/8W	

Symbol. No.	Stock No.	Parts name	Description Chip:(C)	Remark
R616,618,619 813,819,820 827	RN-ERD-AC103JA	Carbon	10 K 5% 1/8W	
R617	RN-ERD-AC333JA	Carbon	33 K 5% 1/8W	
R620	RN-ERD-AC682JA	Carbon	6.8K 5% 1/8W	
R623,824,825	RN-ERD-AC473JA	Carbon	47 K 5% 1/8W	
R625	RN-ERG-AH181JV-NF	Metallic	180 5% 2W	
R801,802,803 804	RN-ERG-AGR47JV-NF	Metallic	.47 5% 1W	
R805	RN-ERD-AC153JA	Carbon	15 K 5% 1/8W	
R806	RN-ERG-AH330JV-NF	Metallic	33 5% 2W	
R807,810	RN-ERD-AC122JA	Carbon	1.2K 5% 1/8W	
R808	RN-ERG-AG101JV-NF	Metallic	100 5% 1W	
R811	RN-ERD-AC101JA	Carbon	100 5% 1/8W	
R814	RN-ERD-AC222JA	Carbon	2.2K 5% 1/8W	
R821	RN-ERG-AG471JV-NF	Metallic	470 5% 1W	
R823	RN-ERD-AC151JA	Carbon	150 5% 1/8W	
R826	RN-ERD-AE272JB	Carbon	2.7K 5% 1/4W	
R828,829	RN-ERD-AC820JA	Carbon	82 5% 1/8W	
VR601	RN-ERV-1N4-1002	Variable		O
SEMICONDUCTORS				
D601	RN-EDS-DAP201	Silicon diode		O
D602	RN-EDS-1SS92	Silicon diode		O
D801	RN-EDS-CTG-22S	Silicon diode		O
D802	RN-EDS-CTG-22R	Silicon diode		O
D803,809,811	RN-EDS-1S1555	Silicon diode		O
D804,805,806	RN-EDS-30D1	Silicon diode		O
D807	RN-EDS-DAN208	Silicon diode		O
D808	RN-EDS-03P2M	Silicon diode		O
D810	RN-EDT-RD5R6EB2	Zener diode	5.6V	O
D813	RN-EDS-6A2	Silicon diode		O
D815	RN-EDT-RD4R7EB2	Zener diode	4.7V	O
D816	RN-EDT-RD5R1EB2	Zener diode	5.1V	O
D817	RN-EDT-RD8R2EB2	Zener diode	8.2V	O
D818,819	RN-EDT-RD12EB	Zener diode	12V	O
IC601	RN-EIC-UPC1225H	Linear-monolithic IC		O
IC602	RN-EIC-UPC1237H	Linear-monolithic IC		O
IC603	RN-EVH-PC817	Optical coupler		O
TR601	RN-EVS-2SD414-Q	Silicon transistor		O
TR602	RN-EVS-2SD1288-Q	Silicon transistor		O
TR603	RN-EVS-2SB965-Q	Silicon transistor		O
TR604,806,808 811	RN-EVS-2SC945-QP	Silicon transistor		O
TR605,606	RN-EVS-2SA1348	Silicon transistor		O
TR801,804	RN-EVS-2SB826-R	Silicon transistor		O
TR805	RN-EVS-2SC1842	Silicon transistor		O
TR807	RN-EVS-2SB986	Silicon transistor		O
TR810	RN-EVS-2SA733-PQ	Silicon transistor		O

Symbol. No.	Stock No.	Parts name	Description Chip:(C)	Remark
TR812	RN-EVS-2SC3402	Silicon transistor		○
MISCELLANEOUS ELECTRICAL				
FB801,802,803 804	RN-EFZ-1006	Filter		
J1	RN-EJK-1017	Jack		
J101	RN-EWJ-5095	Lead assembly		
J102	RN-EWJ-5093	Lead assembly		
J103	RN-EWJ-5090	Lead assembly		
J104	RN-EWJ-5091	Lead assembly		
J105	RN-EWJ-5092	Lead assembly		
J106	RN-EWJ-5094	Lead assembly		
L601	RN-ELH-A1R0	Choke		
L801,802,803	RN-ELL-1049	Choke		
RL601,602	RN-EED-1071	DC relay		○
SW1	RN-ESS-42-1079	Slide switch		○
T801	RN-ETP-1016	Transformer		
T802	RN-ETP-1017	Transformer		
TH801	RN-EVR-471-6	Posister		○

Illus. No. (Fig.10)	Stock No.	Parts name	Description	Q'ty	Remark
MECHANICAL					
501	RN-MRE-1204	Heat-sink	Top	1	
502	RN-MNK-1152	Name plate	Rear	1	
511	RN-MAD-1415	Chassis		1	
513	RN-MHE-1961	Holder		3	
514	RN-MHZ-1043	Holder		1	
515	RN-MHE-1959	Holder	L	1	
516	RN-MHE-1960	Holder	R	1	
517	RN-MIP-1603	Insulater		1	
518	RN-MCO-1014	Clamp		1	
519	RN-MCO-1019	Clamp		1	

NOTE : 1.Specifications subject to change without prior notice.

REPLACEMENT PARTS LIST

Note:Main replacement parts are marked ○ in the remarks column.

Symbol. No.	Stock No.	Parts name	Description Chip:(C)	Remark
CAPACITORS			Unit:μF, P=pF	
C601,603	RN-ECE-M2R2V50-9	Electrolytic	2.2 50 V	
C602,609	RN-ECE-M101V10	Electrolytic	100 10 V	
C604	RN-ECK-DB681KY	Ceramic	680 p 50 V	
C605	RN-ECC-DSL220JY	Ceramic	22 p 50 V	
C606,608	RN-ECF-R333J50	Mylar	.033 50 V	
C607	RN-ECK-DB471KY	Ceramic	470 p 50 V	
C610	RN-ECF-R473J50	Mylar	.047 50 V	
C611,612,614 817,822,829	RN-ECB-DBC104E-1	Ceramic	.1 25 V	
C613	RN-ECE-M331V10-51	Electrolytic	330 10 V	
C615	RN-ECE-M470V35	Electrolytic	47 35 V	
C616	RN-ECK-DF223KY	Ceramic	.022	
C617,819	RN-ECE-M1R0V50-51	Electrolytic	1 50 V	
C805,806,807 808	RN-ECH-R104V50-2	M.P.	.1 50 V	
C809,811,813 815	RN-ECK-DFZ472Z	Ceramic	4700p 50 V	
C810,814	RN-ECE-M470V16-51	Electrolytic	47 16 V	
C812,816	RN-ECF-R102V100	Mylar	1000p 100V	
C818,826,830	RN-ECE-M2R2V50-51	Electrolytic	2.2 50 V	
C821,823	RN-ECE-M472V16	Electrolytic	4700 16 V	
C828	RN-ECK-DFZ103Z	Ceramic	.01 50 V	
C801802,803 804	RN-ECE-M152V35	Electrolytic	1500 35 V	
RESISTORS			Unit:ohm , K=kohm	
R601	RN-ERD-AC122JA	Carbon	1.2K 5% 1/8W	
R602	RN-ERD-AC102JA	Carbon	1 K 5% 1/8W	
R603,605,611 617	RN-ERD-AC563JA	Carbon	56 K 5% 1/8W	
R604	RN-ERD-AC391JA	Carbon	390 5% 1/8W	
R606	RN-ERD-AC112JA	Carbon	1.1K 5% 1/8W	
R607	RN-ERD-AC182JA	Carbon	1.8K 5% 1/8W	
R608	RN-ERI-1041-2RR15J	Resistor arrey	.15x2 5%	
R609	RN-ERD-AC394JA	Carbon	390K 5% 1/8W	
R610,620	RN-ERD-AC562JA	Carbon	5.6K 5% 1/8W	
R612	RN-ERD-AC104JA	Carbon	100K 5% 1/8W	
R613,614	RN-ERG-AG100J	Metallic	10 5% 1W	
R615,623,820 837,838	RN-ERD-AC103JA	Carbon	10 K 5% 1/8W	
R616,822	RN-ERD-AC273JA	Carbon	27 K 5% 1/8W	
R618,807,816	RN-ERD-AC153JA	Carbon	15 K 5% 1/8W	
R621,834	RN-ERD-AC473JA	Carbon	47 K 5% 1/8W	
R624,625	RN-ERG-AG181J	Metallic	180 5% 1W	
R626,627,823 839	RN-ERD-AC101JA	Carbon	100 5% 1/8W	

Symbol. No.	Stock No.	Parts name	Description Chip:(C)	Remark
R628	RN-ERD-AC510JA	Carbon	51 5% 1/8W	
R801,802,803 804,810,811 812,813	RN-ERG-AGR47J	Metallic	.47 5% 1W	
R805,814	RN-ERG-AH470J	Metallic	47 5% 2W	
R806,809,815	RN-ERG-AG101J	Metallic	100 5% 1W	
R808,817,825 826	RN-ERD-AC122JA	Carbon	1.2K 5% 1/8W	
R819	RN-ERD-AC222JA	Carbon	2.2K 5% 1/8W	
R821	RN-ERD-AE103JB	Carbon	10 K 5% 1/4W	
R824	RN-ERD-AC154JA	Carbon	150K 5% 1/8W	
R830,831,833	RN-ERD-AC102JA	Carbon	1 K 5% 1/8W	
R832	RN-ERD-AC151JA	Carbon	150 5% 1/8W	
R834	RN-ERG-AG471J	Metallic	470 5% 1W	
R836	RN-ERD-AE272JB	Carbon	2.7K 5% 1/4W	
VR601	RN-ERV-1N4-1002	Variable		○
SEMICONDUCTORS				
D601	RN-EDS-DAP201	Silicon diode		○
D602,603,605 810,816,817	RN-EDS-1S1555	Silicon diode		○
D604,606	RN-EDT-GZA24Y	Zener diode		○
D801,803	RN-EDS-CTG-22S	Silicon diode		○
D802,804	RN-EDS-CTG-22R	Silicon diode		○
D805,806,807 811,812,813	RN-EDS-30D1	Silicon diode		○
D808,814	RN-EDS-DAN208	Silicon diode		○
D809,815	RN-EDS-03P2M	Silicon diode		○
D818	RN-EDT-RD5R6EB2	Zener diode		○
D823	RN-EDT-RD4R7EB3	Zener diode		○
D824,825	RN-EDS-6A2	Silicon diode		○
D826	RN-EDT-RD8R2EB3	Zener diode		○
D827	RN-EDT-RD5R1EB2	Zener diode		○
IC601	RN-EIC-UPC1225H	Linear-monolithic IC		○
IC602	RN-EIC-UPC1237H	Linear-monolithic IC		○
IC603	RN-EVH-PC817	Optical coupler		○
TR601	RN-EVS-2SD414-Q	Silicon transistor		○
TR603	RN-EVS-2SC2987	Silicon transistor		○
TR604	RN-EVS-2SA1227	Silicon transistor		○
TR605,809,816 818	RN-EVS-2SC945-QP	Silicon transistor		○
TR606	RN-EVS-2SA1348	Silicon transistor		○
TR801,802,803 804,805,806 807,808	RN-EVS-2SB826-R	Silicon transistor		○
TR810,811	RN-EVS-2SC1842	Silicon transistor		○
TR814	RN-EVS-2SB986	Silicon transistor		○
TR815	RN-EVS-2SA733-PQ	Silicon transistor		○
TR817	RN-EVS-2SC3402	Silicon transistor		○

Symbol. No.	Stock No.	Parts name	Description Chip:(C)	Remark
MISCELLANEOUS ELECTRICAL				
FB801,802,803 804,805,806 807,808	RN-EFZ-1007	Filter		
J1	RN-EJK-1017	Jack		
J101	RN-EWJ-5093	Lead assembly		
J102	RN-EWJ-5138	Lead assembly		
J103	RN-EWJ-5091	Lead assembly		
J104	RN-EWJ-5092	Lead assembly		
J105	RN-EWJ-5139	Lead assembly		
J106	RN-EWJ-5140	Lead assembly		
L601	RN-ELH-A1R0	Choke		
L805,806	RN-ELL-1052	Choke		
L801802,803 804	RN-ELL-1049	Choke		
RL601,602	RN-EED-1073	DC relay		○
SW1	RN-ESS-42-1079	Slide switch		○
T801,803	RN-ETP-1018	Transformer		
T802,804	RN-ETP-1017	Transformer		
TH801,802	RN-EVR-471-6	Posister		○

Illus. No. (Fig.11)	Stock No.	Parts name	Description	Q'ty	Remark
MECHANICAL					
501	RN-MRE-1208	Heat-sink	Top	2	
502	RN-MNK-1152	Name plate	Rear	2	
503	RN-MRE-1206	Heat-sink		2	
504	RN-MIP-1617	Insulater		2	
516	RN-MAD-1421	Chassis	Bottom	1	
518	RN-MHE-1961	Holder		3	
519	RN-MHZ-1043	Holder		1	
520	RN-MHE-1959	Holder	L	1	
521	RN-MHE-1960	Holder	R	1	
522	RN-MIP-1618	Insulater		1	
524	RN-MCO-1014	Clamp		2	

NOTE : 1.Specifications subject to change without prior notice.

SCHEMATIC (UM-141)

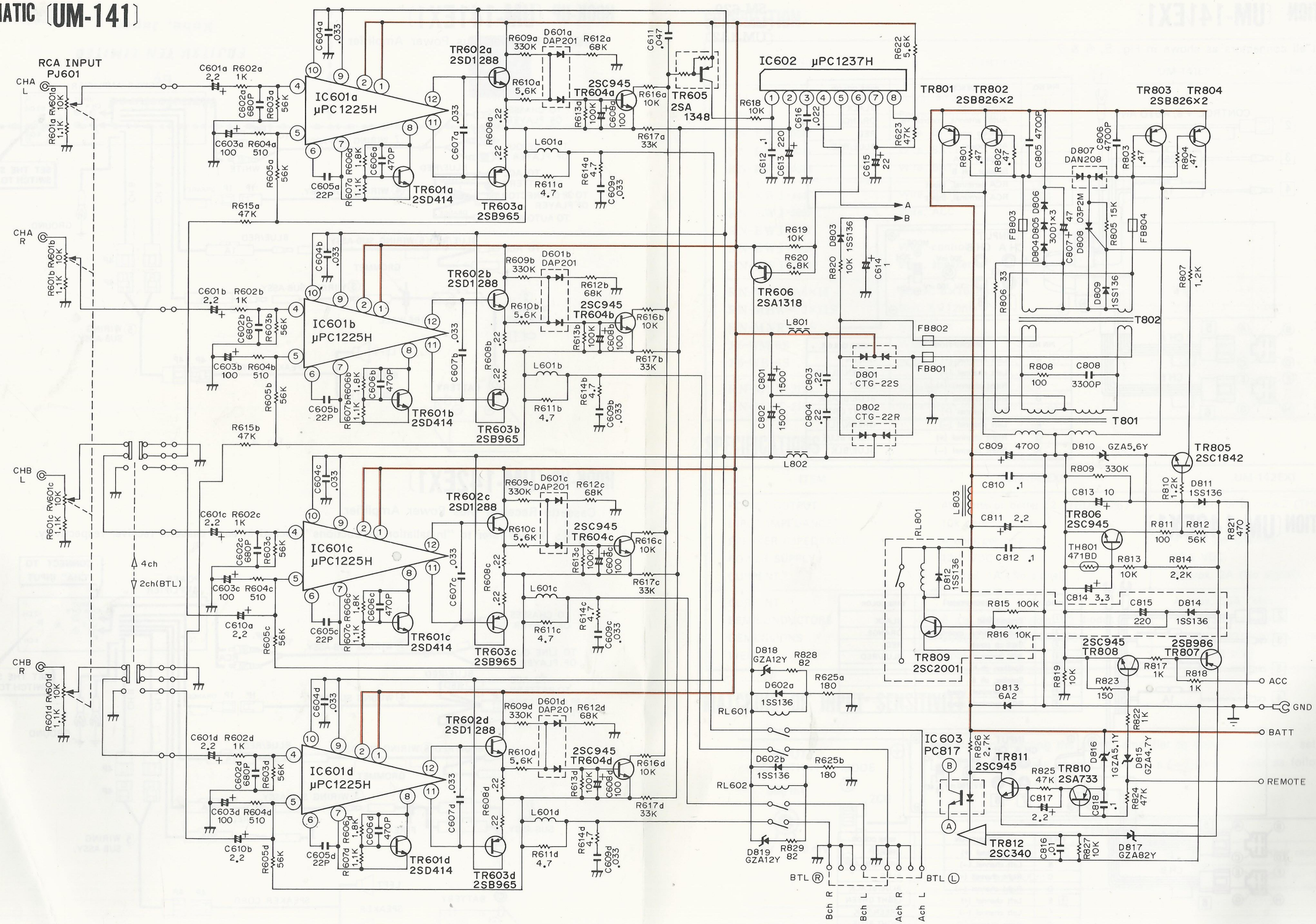

NOTES: 1. All capacitance in Micro farad, $P=10^{-12}$
2. All resistance in ohm, $K=10^{3}$

Fig. 6

3. All inductance in henry, $m=10^{-3}$, $\mu=10^{-6}$
4. DC voltages against the chassis measured with 10M ohms digital volt meter, power supply set at +13.2 VDC, no signal input.

WIRING ON PC BOARD (UM-141)

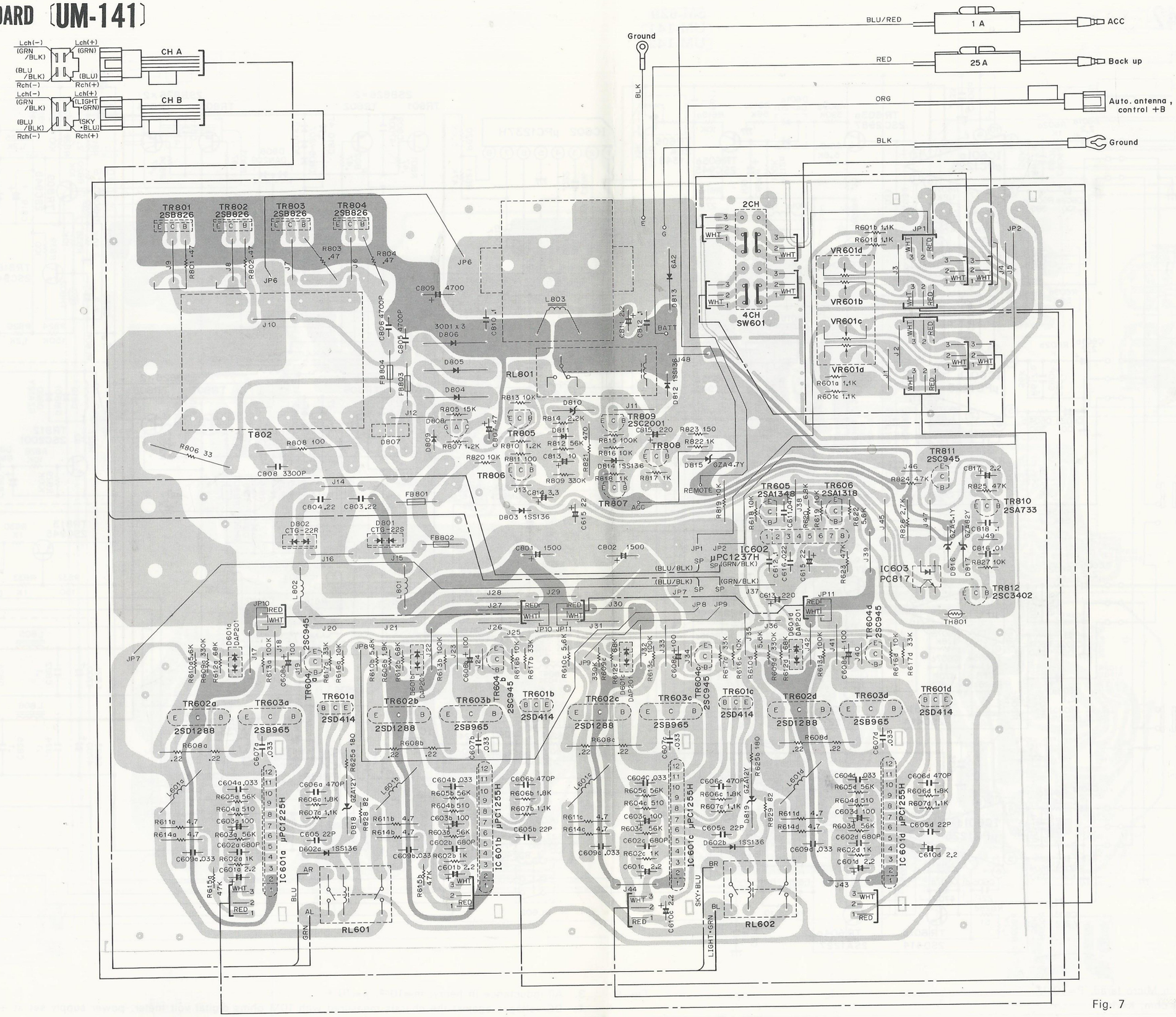

Fig. 7

SCHEMATIC (UM-142)

SM-629
(UM-141)
(UM-142)

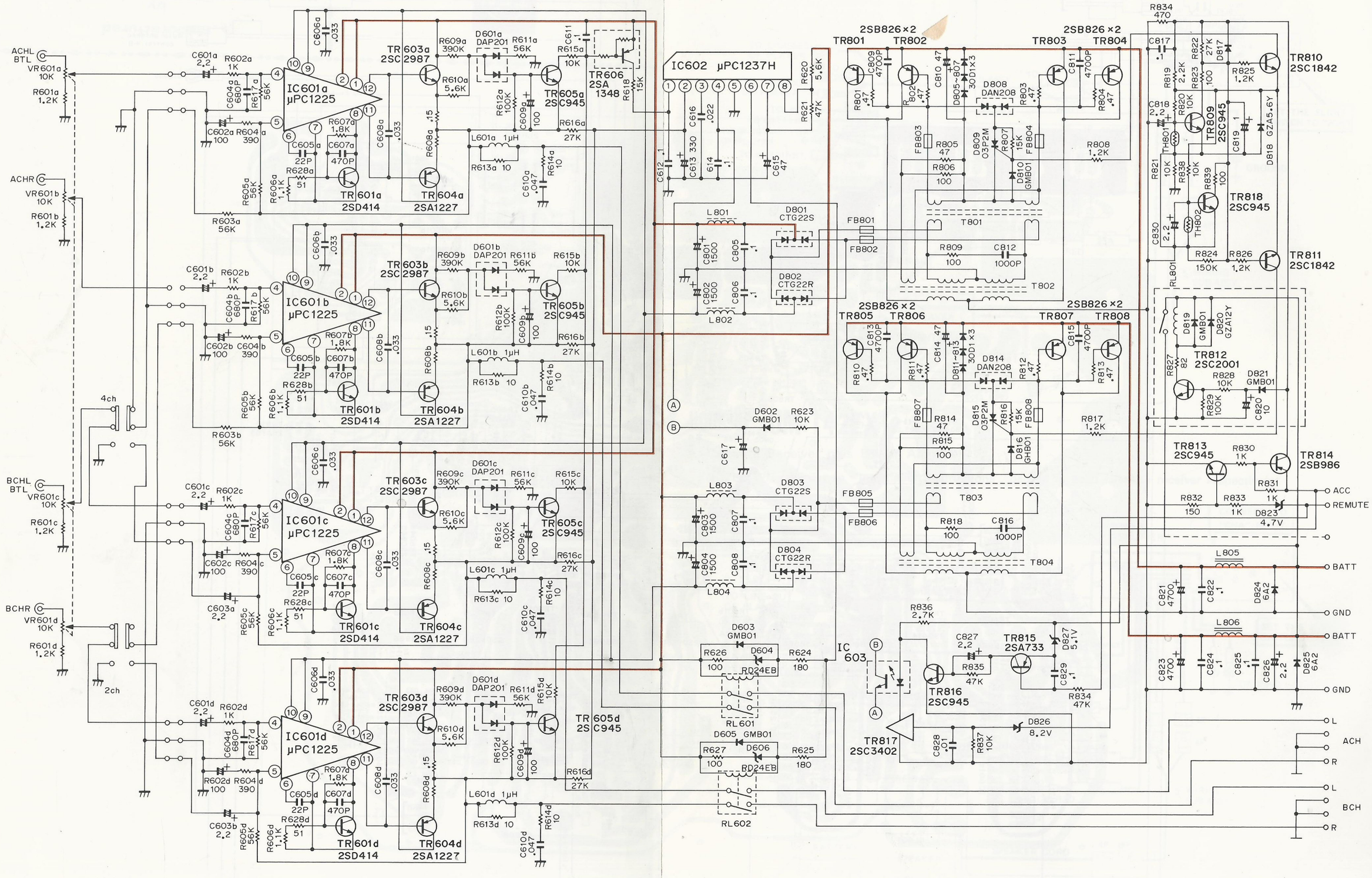

NOTES: 1. All capacitance in Micro farad, $P=10^{-12}$
2. All resistance in ohm, $K=10^{3}$

Fig. 8

3. All inductance in henry, $m=10^{-3}$, $\mu=10^{-6}$
4. DC voltages against the chassis measured with 10M ohms digital volt meter, power supply set at +13.2 VDC, no signal input.

WIRING ON PC BOARD
(UM-142)

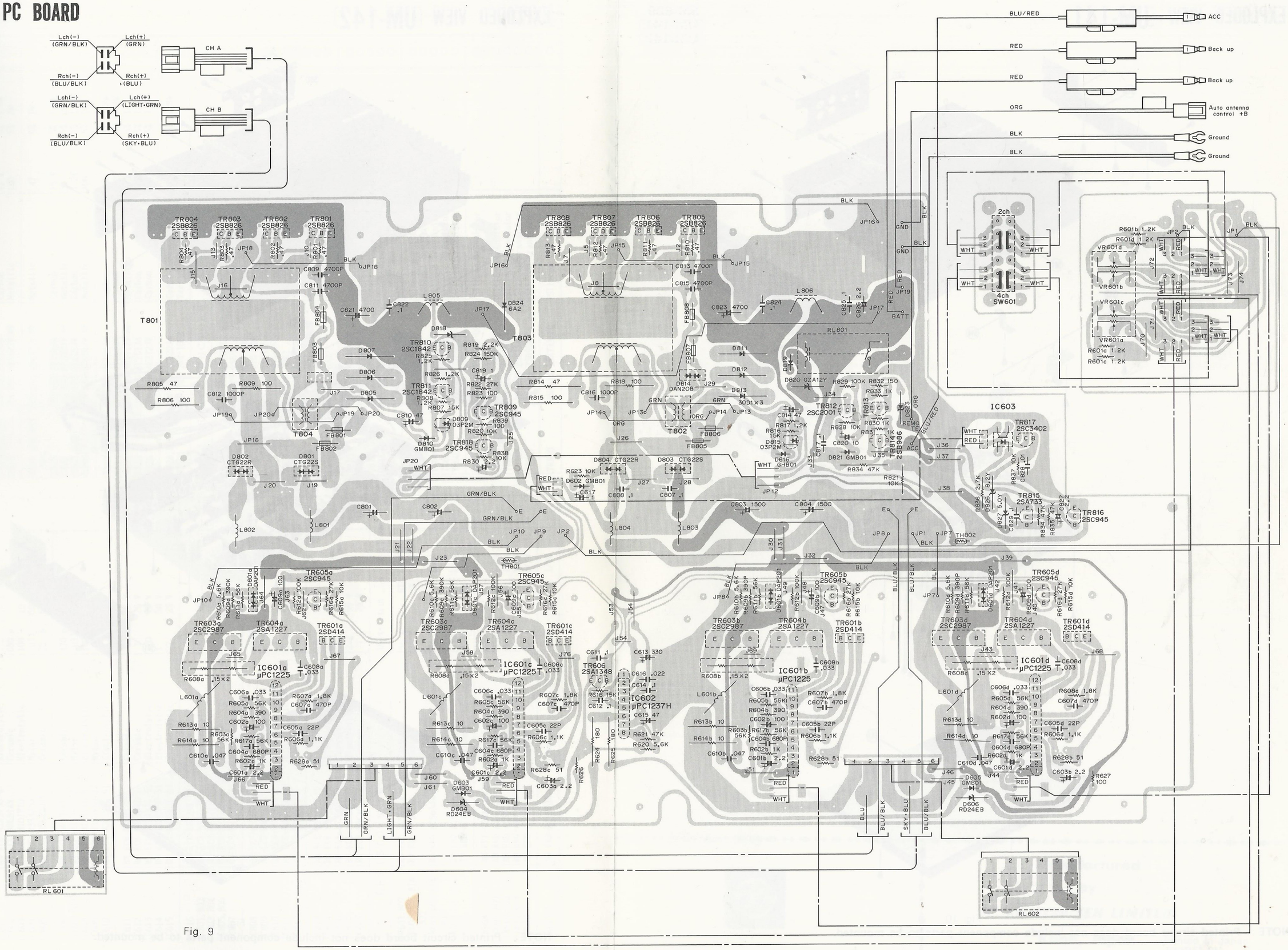

Fig. 9