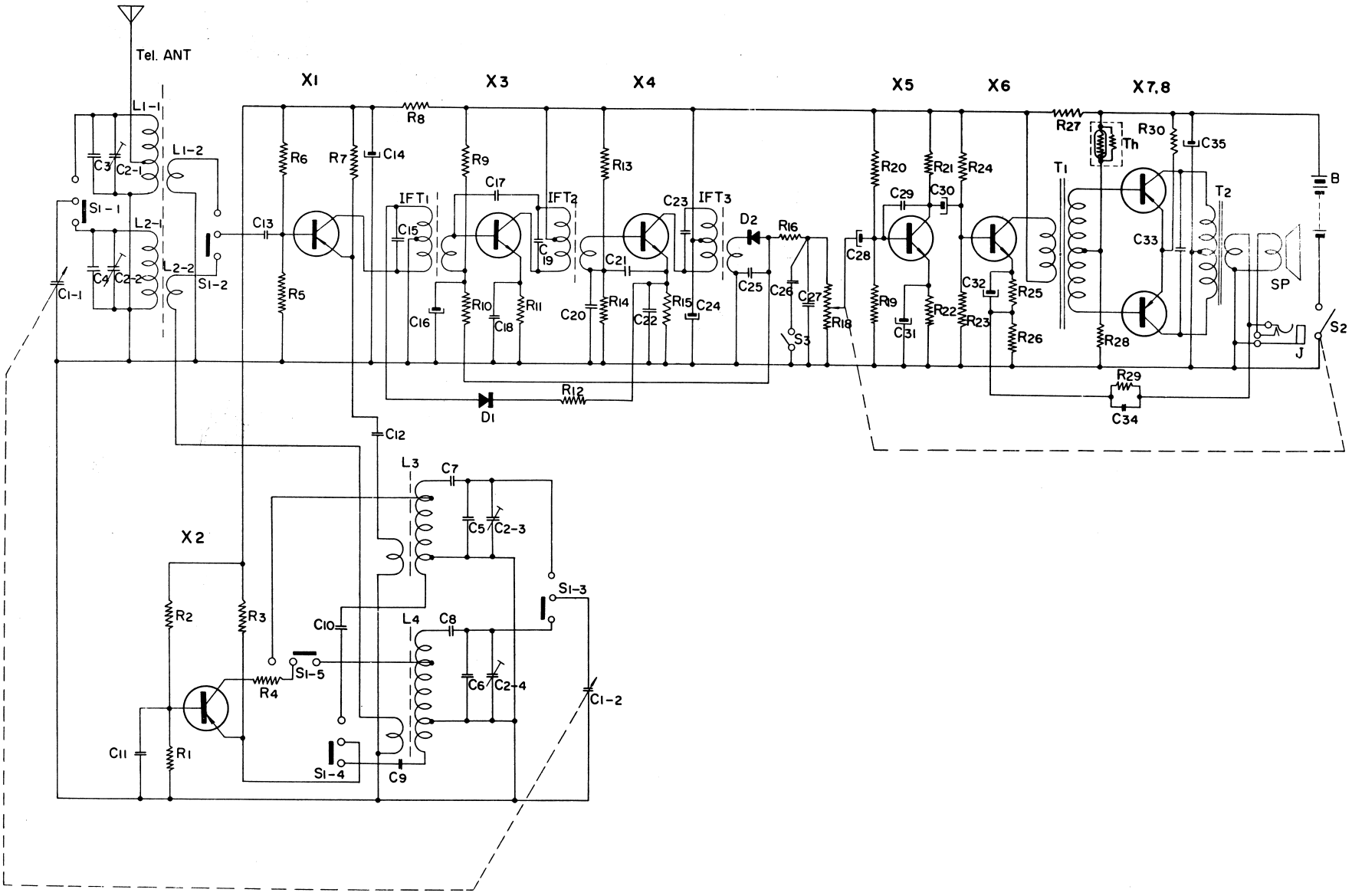
Tel. ANT
X1
X3
X4
X5
X6
X7,8
X2
L1-1
L1-2
L2-1
L2-2
C3
C2-1
C4
C2-2
C1-1
S1-1
S1-2
C13
R6
R5
R7
C14
R8
R9
C17
IFT1
C15
C16
R10
C18
R11
IFT2
C19
R13
C21
C20
R14
C22
R15
C24
C23
IFT3
C25
D2
R16
C26
C27
S3
R18
D1
R12
C28
C29
C30
R20
R21
R24
R9
C31
R22
C32
R23
R25
R26
R27
Th
R30
C35
T1
C33
T2
R28
SP
J
S2
B
R29
C34
C12
L3
C7
C5
C2-3
S1-3
L4
C8
C6
C2-4
C1-2
C10
S1-5
R4
R2
R3
C11
R1
S1-4
C9

## Voltage and Current Distribution Chart at Zero Signal

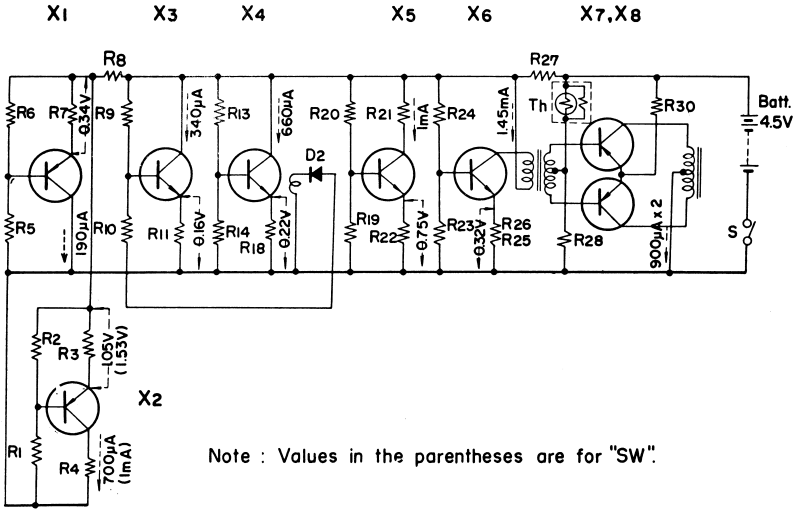


Note : Values in the parentheses are for "SW".

## Mounting Diagram

—Parts Side—

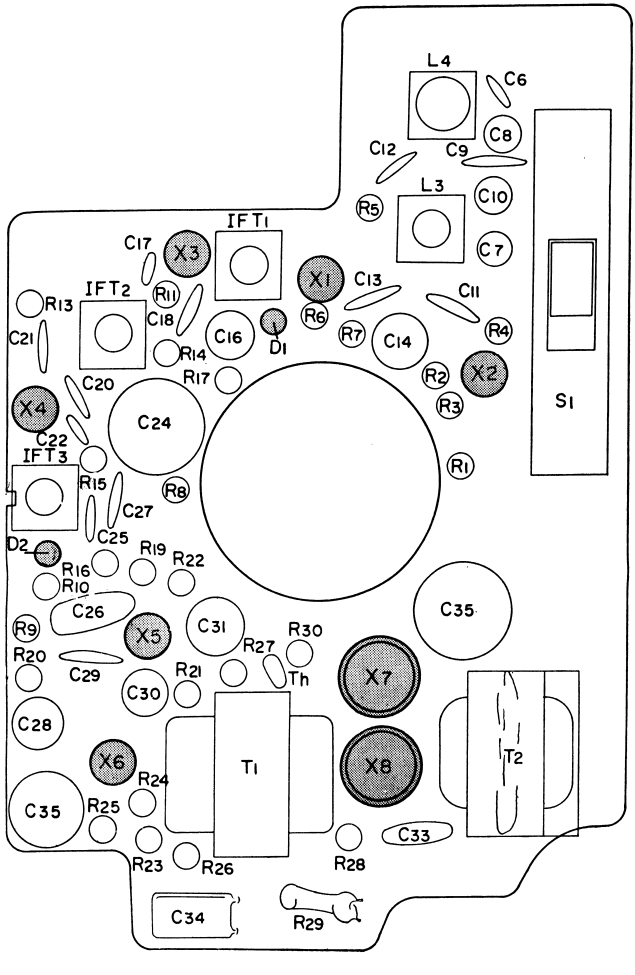

# SONY TR-832

| Part No. | Symbol | Description |
|---|---|---|
| 1-501-042-11 | Tel. ANT | Telescopic Antenna |
| 1-401-183-11 | $L_1$ | SW, Ferrite Bar Antenna |
| | $L_2$ | MW, Ferrite Bar Antenna |
| 1-405-108-11 | $L_3$ | SW, Oscillator Coil |
| -107-11 | $L_4$ | MW, Oscillator Coil |
| 1-403-025-00 | $IFT_1$ | IF Transformer |
| -026-00 | $IFT_2$ | 〃 |
| -027-00 | $IFT_3$ | 〃 |
| 1-423-051-00 | $T_1$ | Driver Transformer |
| 1-427-073-00 | $T_2$ | Output Transformer |
| 1-513-204-11 | $S_1$ | Band Setting Switch |
| | $S_2$ | Power Switch (VR) |
| 1-513-075-00 | $S_3$ | Tone Selector Switch |
| 1-507-050-01 | J | Earphone Jack |
| 1-502-093-12 | SP | Speaker |
| 1-528-003-00 | Batt. | Battery (6 V) |
| | $X_1$ | Transistor 2SA122 |
| | $X_2$ | 〃 2SA122 |
| | $X_3$ | 〃 2SC76 |
| | $X_4$ | 〃 2SC76 |
| | $X_5$ | 〃 2SD65 |
| | $X_6$ | 〃 2SD65 |
| | $X_7$ | 〃 2SB52 |
| | $X_8$ | 〃 2SB52 |
| | $D_1$ | Diode 1T23G |
| | $D_2$ | 〃 1T23G |
| | Th | Thermistor CS-120 |
| | | **Resistor** |
| 1-203-384-00 | $R_1$ | 12KΩ 1/8W Carbon |
| -380-00 | $R_2$ | 6.2KΩ 〃 〃 |
| -405-00 | $R_3$ | 1.5KΩ 〃 〃 |

| Part No. | Symbol | Description |
|---|---|---|
| 1-203-367-00 | $R_4$ | 1KΩ 1/8W Carbon |
| -407-00 | $R_5$ | 39KΩ 〃 〃 |
| -378-00 | $R_6$ | 5.6KΩ 〃 〃 |
| -369-00 | $R_7$ | 1.8KΩ 〃 〃 |
| -360-00 | $R_8$ | 330Ω 〃 〃 |
| -409-00 | *$R_9$ | 68KΩ 〃 〃 |
| -378-00 | $R_{10}$ | 5.6KΩ 〃 〃 |
| -361-00 | $R_{11}$ | 470Ω 〃 〃 |
| -367-00 | $R_{12}$ | 1KΩ 〃 〃 |
| -388-00 | $R_{13}$ | 27KΩ 〃 〃 |
| ( -387-00) | | (22KΩ 〃 〃 ) |
| -373-00 | $R_{14}$ | 3.3KΩ 〃 〃 |
| -360-00 | $R_{15}$ | 330Ω 〃 〃 |
| -361-00 | $R_{16}$ | 470Ω 〃 〃 |
| | $R_{17}$ | —deleted— |
| 1-221-374-11 | $R_{18}$ | 5KΩ Volume Control |
| 1-203-782-00 | $R_{19}$ | 4.2KΩ 1/8W Carbon |
| -386-00 | $R_{20}$ | 18KΩ 〃 〃 |
| -368-00 | $R_{21}$ | 1.2KΩ 〃 〃 |
| -335-00 | $R_{22}$ | 750Ω 〃 〃 |
| -370-00 | $R_{23}$ | 2.2KΩ 〃 〃 |
| -386-00 | $R_{24}$ | 18KΩ 〃 〃 |
| -358-00 | $R_{25}$ | 220Ω 〃 〃 |
| -351-00 | $R_{26}$ | 5.1Ω 〃 〃 |
| -358-00 | $R_{27}$ | 220Ω 〃 〃 |
| -378-00 | $R_{28}$ | 5.6KΩ 〃 〃 |
| -415-00 | $R_{29}$ | 150Ω 〃 〃 |
| -351-00 | $R_{30}$ | 5.1Ω 〃 〃 |
| | | **Capacitor** |
| 1-151-050-00 | $C_{1-1\sim2}$ | Tuning Capacitor, 2 gang |
| | $C_{2-1\sim4}$ | Trimmer Capacitor |
| 1-101-013-13 | $C_3$ | 10PF Ceramic |

| Part No. | Symbol | Description |
|---|---|---|
| 1-101-094-13 | $C_4$ | 7PF Ceramic |
| -094-13 | $C_5$ | 7PF 〃 |
| -051-13 | $C_6$ | 12PF 〃 |
| 1-103-345-12 | $C_7$ | 1600PF Styrol |
| -029-12 | $C_8$ | 250PF 〃 |
| 1-105-043-11 | $C_9$ | 0.005μF Mylar |
| 1-103-090-12 | $C_{10}$ | 400PF Styrol |
| 1-105-041-11 | $C_{11}$ | 0.01μF Mylar |
| -043-11 | $C_{12}$ | 0.005μF 〃 |
| -041-11 | $C_{13}$ | 0.01μF 〃 |
| 1-121-102-06 | $C_{14}$ | 30μF 6V Electrolytic |
| | $C_{15}$ | (built in $IFT_1$) |
| 1-121-104-06 | $C_{16}$ | 10μF 6V Electrolytic |
| 1-101-010-13 | $C_{17}$ | 2PF Ceramic |
| 1-105-045-11 | $C_{18}$ | 0.02μF Mylar |
| | $C_{19}$ | (built in $IFT_2$) |
| 1-105-045-11 | $C_{20}$ | 0.02μF Mylar |
| -041-11 | $C_{21}$ | 0.01μF 〃 |
| -045-11 | $C_{22}$ | 0.02μF 〃 |
| | $C_{23}$ | (built in $IFT_3$) |
| 1-121-115-05 | $C_{24}$ | 100μF 6V Electrolytic |
| 1-105-041-11 | $C_{25}$ | 0.01μF Mylar |
| 1-121-207-11 | $C_{26}$ | 0.1μF 15V Electrolytic |
| 1-105-041-11 | $C_{27}$ | 0.01μF Mylar |
| 1-121-104-06 | $C_{28}$ | 10μF 6V Electrolytic |
| 1-105-043-11 | $C_{29}$ | 0.005μF Mylar |
| 1-121-104-06 | $C_{30}$ | 10μF 6V Electrolytic |
| -102-06 | $C_{31}$ | 30μF 6V 〃 |
| -135-06 | $C_{32}$ | 50μF 6V 〃 |
| 1-105-044-11 | $C_{33}$ | 0.05μF Mylar |
| -045-11 | $C_{34}$ | 0.02μF 〃 |
| 1-121-115-05 | $C_{35}$ | 100μF 6V Electrolytic |

* To be adjusted