Schematic Diagram for TR-816

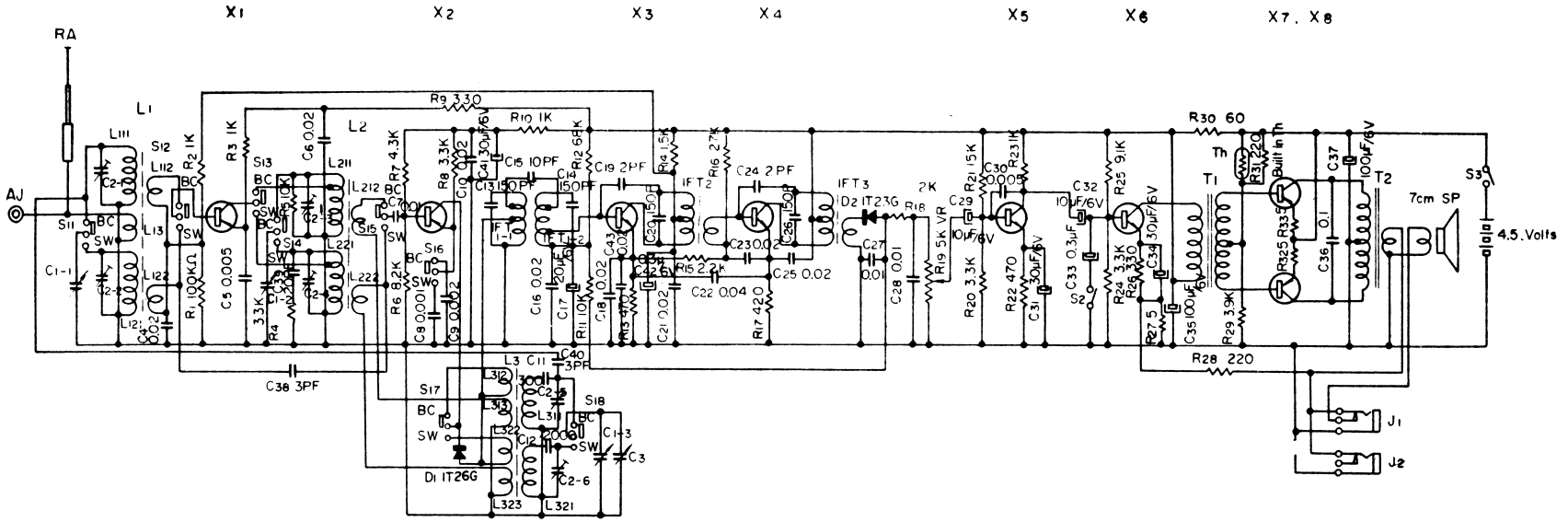

Schematic Diagram for TR-816Y

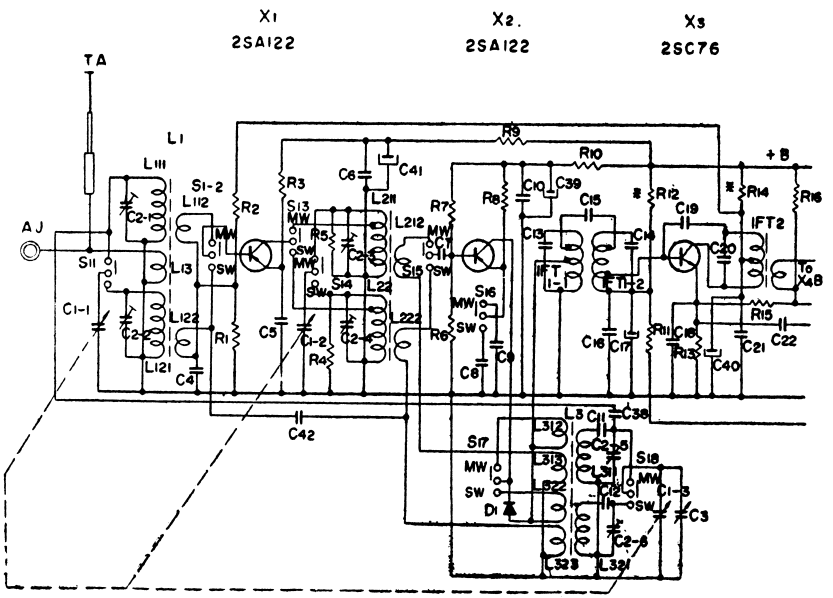

Mounting Diagram for TR-816Y (Printed Side)

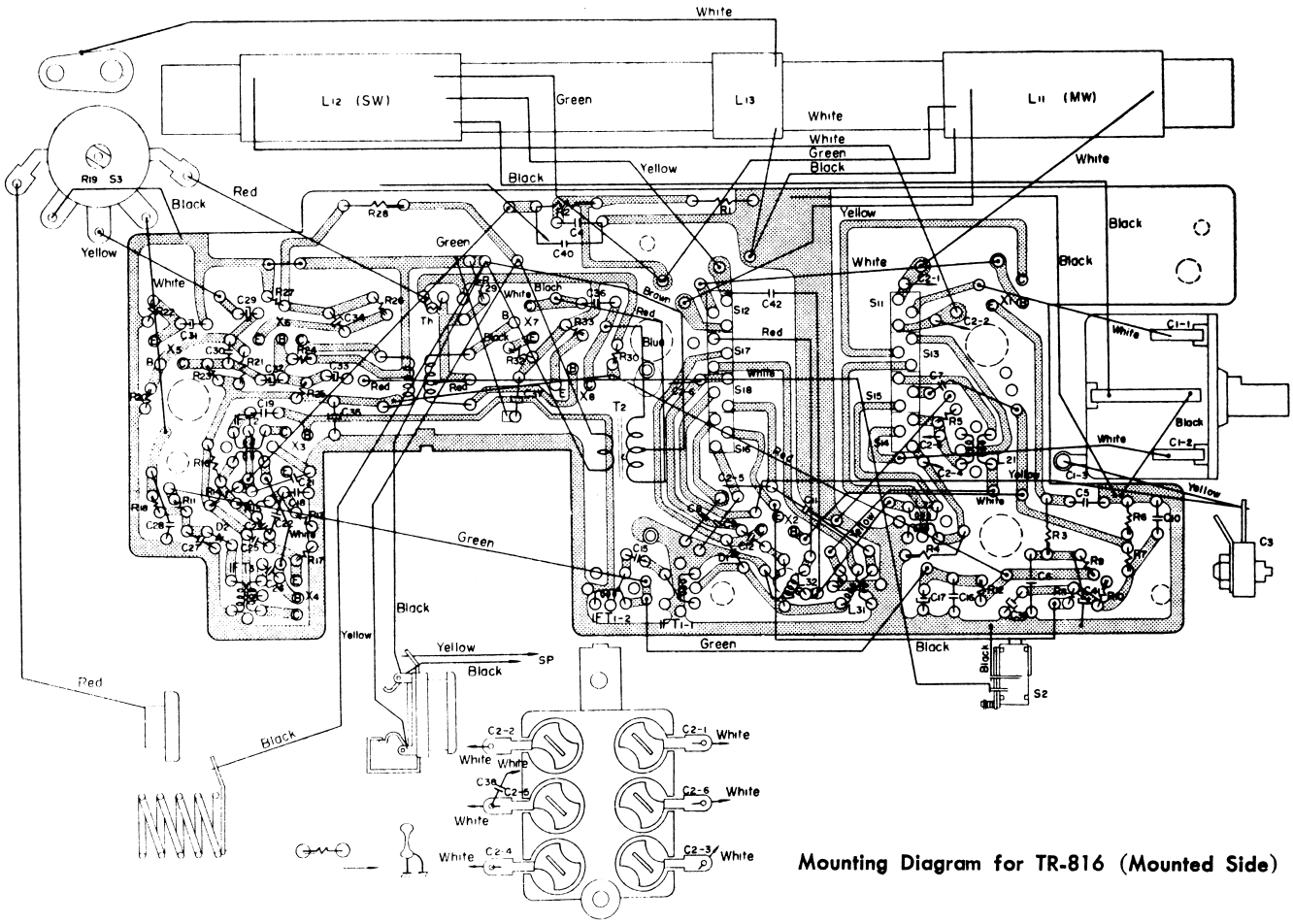

Mounting Diagram for TR-816 (Mounted Side)

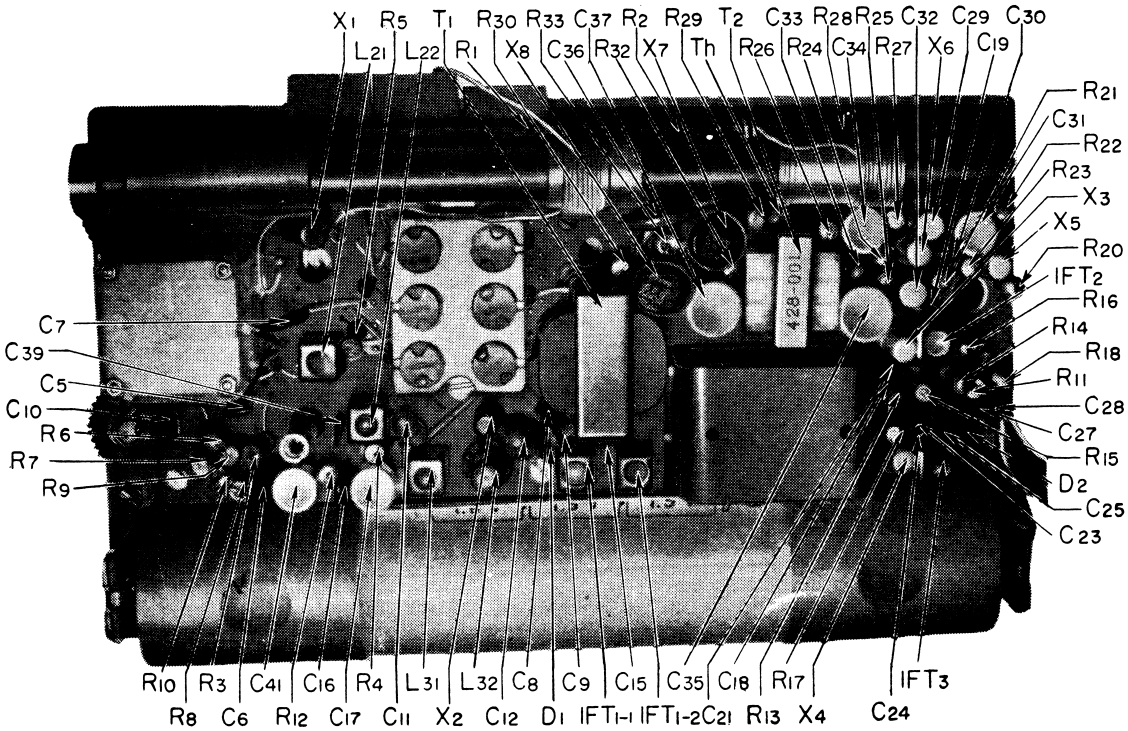

SONY MODEL TR-816 & TR-816Y.

To Remove the Circuit Board :

1) Unscrew two Phillips screws (plus screws) to remove the rear cover.
2) Remove three screws which can be seen through the three holes on the circuit board.
3) Take out the batteries.
4) Remove two screws to remove the battery container.
5) Remove one chassis fix screw on the lower left corner.
6) Remove one screw between the oscillator coil and IFT on the circuit board.

Ajustment and Alignment :

a) Frequency Coverage

	Lower Limit	Adjust	Upper Limit	Adjust
MW	520 Kc	Core of L_{31}	1,680 Kc	C_{2-5}
SW	3.8 Mc	Core of L_{32}	12.6 Mc	C_{2-6}
	(5.8 Mc for TR-816Y)		(18.6 Mc for TR-816Y)	

b) Tracking Alignment (Repeat several times)

	Checking Point	Adjust	
MW	620 Kc	Core of L_{21},	Position of L_{11}
	1,400 Kc	C_{2-3}, C_{2-1}	
SW	3.8 Mc (5.8 Mc for TR-816Y)	Core of L_{22},	Position of L_{12}
	12.6 Mc (18.6 Mc for TR-816Y)	C_{2-4}, C_{2-2}	

Voltage and Current Distribution Chart at Zero Signal

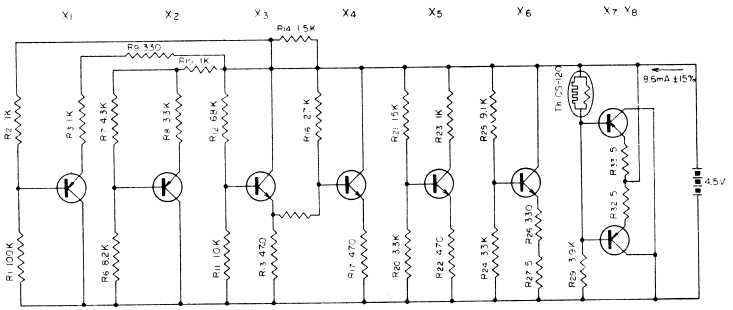

	Collector Current	Emitter Voltage
X_1	190 ~ 270 μA	0.19 ~ 0.27 V
X_2	310 ~ 390 μA	1.0 ~ 1.30 V
X_3	300 ~ 380 μA	0.22 ~ 0.26 V
X_4	380 ~ 520 μA	0.19 ~ 0.24 V
X_5	800 ~ 940 μA	0.38 ~ 0.44 V
X_6	0.9 ~ 3.9 mA	0.75 ~ 0.86 V
$X_{7,8}$	1.0 ~ 1.8 mA	

Electronic Parts List for TR-816 & TR-816Y

Part No.	Symbol	Description	Part No.	Symbol	Description
1-501-017-00	RA	Telescopic Antenna	1-203-802-00	R_{25}	Carbon Resistor 9.1 KΩ RD 1/8 RL ±5%
1-401-103-00	L_1	Ferrite Bar Antenna	1-203-360-00	R_{26}	〃 330 Ω 〃
(1-401-126-00)			1-203-351-00	R_{27}	〃 5.1 Ω 〃
1-425-014-00	L_{21}	MW, RF Transformer	1-203-018-00	R_{28}	〃 220 Ω RD 1/4 L ±5%
1-425-015-00	L_{22}	SW, 〃	1-203-374-00	R_{29}	〃 3.9 KΩ RD 1/8 RL ±5%
(1-425-019-00)			1-203-355-00	R_{30}	〃 62 Ω 〃
1-405-083-00	L_{31}	MW, Oscillator Coil		R_{31}	—deleted—
1-405-084-00	L_{32}	SW, 〃	1-203-351-00	R_{32}	Carbon Resistor 5.1 Ω RD 1/8 RL ±5%
(1-405-202-00)			1-203-351-00	R_{33}	〃 5.1 Ω 〃
1-513-115-00	S_1	Band Setting Switch	1-151-027-00	C^{1-1}_{1-3}	Tuning Capacitor, 3 gang
1-514-047-00	S_2	Tone Control Switch	1-141-123-00	C^{2-1}_{2-6}	Trimmer Capacitor, 6 unit
1-221-240-00	S_3	Power Switch (with R_{19})	1-151-107-01	C_3	Fine Tuning Capacitor
1-507-036-02	AJ	Antenna Jack	1-105-013-00	C_4	Capacitor 0.02 μF ±30/20% Mylar
1-403-055-00	IFT_{1-1}	Double Tuned IFT	1-105-011-00	C_5	〃 0.005 μF 〃
1-403-056-00	IFT_{1-2}	〃	1-105-013-00	C_6	〃 0.02 μF 〃
1-403-026-00	IFT_2	IF Transformer	(1-105-078-00)		〃 (0.04 μF 〃
1-403-027-00	IFT_3	〃	1-105-012-00	C_7	〃 0.01 μF 〃
1-423-001-00	T_1	Driving Transformer	1-105-009-00	C_8	〃 0.001 μF 〃
1-427-052-20	T_2	Output Transformer	1-105-010-00	C_9	〃 0.002 μF 〃
1-507-030-00	$J_{1,2}$	Twin Earphone Jack	1-105-013-00	C_{10}	〃 0.02 μF 〃
1-502-047-00	SP	Speaker VC 8 Ω	1-103-062-00	C_{11}	〃 300 PF ±10% Styrol
	X_1	Transistor 2SA122	1-103-037-00	C_{12}	〃 2000 pF 〃
	X_2	〃 2SA122	(1-103-016-00)		〃 (3000 PF ± 5%)
	X_3	〃 2SC76		C_{13}	〃 150 PF built in IFT
	X_4	〃 2SC76		C_{14}	〃 150 PF built in IFT
	X_5	〃 2SD65	1-101-013-00	C_{15}	〃 10 PF ±1 PF Ceramic
	X_6	〃 2SD65	1-105-013-00	C_{16}	〃 0.02 μF ±30/20% Mylar
	X_7	〃 2SB52	1-121-102-00	C_{17}	〃 30 μF 6 V Electrolytic
	X_8	〃 2SB52	1-105-042-00	C_{18}	〃 0.04 μF ±30/20% Mylar
	D_1	Diode 1T26G	(1-105-013-00)		〃 (0.02 μF 〃)
	D_2	〃 1T23G	1-101-046-00	C_{19}	〃 2 PF ±0.5 PF Ceramic
	Th	Thermistor CS120		C_{20}	〃 150 PF built in IFT
1-203-100-00	R_1	Carbon Resistor 100 KΩ RD 1/4 L ±5%	1-105-013-00	C_{21}	〃 0.02 μF ±30/20% Mylar
(1-203-123-00)		〃 (120 KΩ 〃)	(1-105-078-00)		〃 (0.04 μF 〃)
1-203-035-00	R_2	〃 1.0 KΩ 〃	1-101-023-00	C_{22}	〃 0.04 μF ±100/0% Ceramic
(1-203-031-00)		〃 (7.5 KΩ 〃)	1-105-013-00	C_{23}	〃 0.02 μF ±30/20% Mylar
1-203-367-00	R_3	〃 1.0 KΩ RD 1/8 L ±5%	1-101-046-00	C_{24}	〃 2 PF ±0.5 PF Ceramic
1-203-373-00	R_4	〃 3.3 KΩ RD 1/8 RL ±5%	1-105-013-00	C_{25}	〃 0.02 μF ±30/20% Mylar
(1-203-385-00)		〃 (15 KΩ 〃)		C_{26}	〃 150 PF built in IFT
1-203-383-00	R_5	〃 10 KΩ 〃	1-105-012-00	C_{27}	〃 0.01 μF ±30/20% Mylar
(1-203-390-00)		〃 (33 KΩ 〃)	1-105-012-00	C_{28}	〃 0.01 μF 〃
1-203-408-00	R_6	〃 8.2 KΩ 〃	1-121-104-00	C_{29}	〃 10 μF 6 V Electrolytic
1-203-306-00	R_7	〃 4.3 KΩ 〃	1-105-011-00	C_{30}	〃 0.005 μF ±30/20% Mylar
1-203-373-00	R_8	〃 3.3 KΩ 〃	1-121-102-00	C_{31}	〃 30 μF 6 V Electrolytic
1-203-360-00	R_9	〃 330 Ω 〃	1-121-104-00	C_{32}	〃 10 μF 〃
1-203-367-00	R_{10}	〃 1.0 KΩ 〃	1-127-901-00	C_{33}	〃 0.3 μF 6 V ±100/0% Alox
1-203-383-00	R_{11}	〃 10 KΩ 〃	1-121-102-00	C_{34}	〃 30 μF 6 V Electrolytic
1-203-409-00	R_{12}*	〃 68 KΩ 〃	1-121-115-00	C_{35}	〃 100 μF 〃
1-203-361-00	R_{13}	〃 470 Ω 〃	1-101-109-00	C_{36}	〃 0.1 μF Ceramic
1-203-368-00	R_{14}*	〃 1.2 KΩ 〃	1-121-115-00	C_{37}	〃 100 μF 6 V Electrolytic
1-203-370-00	R_{15}	〃 2.2 KΩ 〃	1-101-047-00	C_{38}	〃 3 PF ±0.5 PF Ceramic
1-203-388-00	R_{16}	〃 27 KΩ 〃	1-103-022-00	C_{39}	〃 20 PF ±10% Styrol
1-203-361-00	R_{17}	〃 470 Ω 〃	(1-121-102-00)		〃 (30 μF 6 V Electrolytic)
1-203-323-00	R_{18}	〃 20 KΩ 〃	1-101-047-00	C_{40}	〃 3 PF ±0.5 PF Ceramic
(1-203-373-00)		〃 (3.3 KΩ 〃)	(1-121-102-00)		〃 (30 μF 6 V Electrolytic)
1-221-240-00	R_{19}	Volume Control	1-121-102-00	C_{41}	〃 30 μF 〃
1-203-373-00	R_{20}	Carbon Resistor 3.3 KΩ RD 1/8 RL ±5%		C_{42}	—deleted—
1-203-385-00	R_{21}	〃 15 KΩ 〃	(1-101-047-00)		〃 (3 PF ±0.5 PF Ceramic)
1-203-361-00	R_{22}	〃 470 Ω 〃		C_{43}	〃
1-203-367-00	R_{23}	〃 1.0 KΩ 〃	1-119-051-00	C_{44}	Capacitor 1 μF 6 V Electrolytic
1-203-373-00	R_{24}	〃 3.3 KΩ 〃			

Parts for TR-816Y are shown in parentheses.
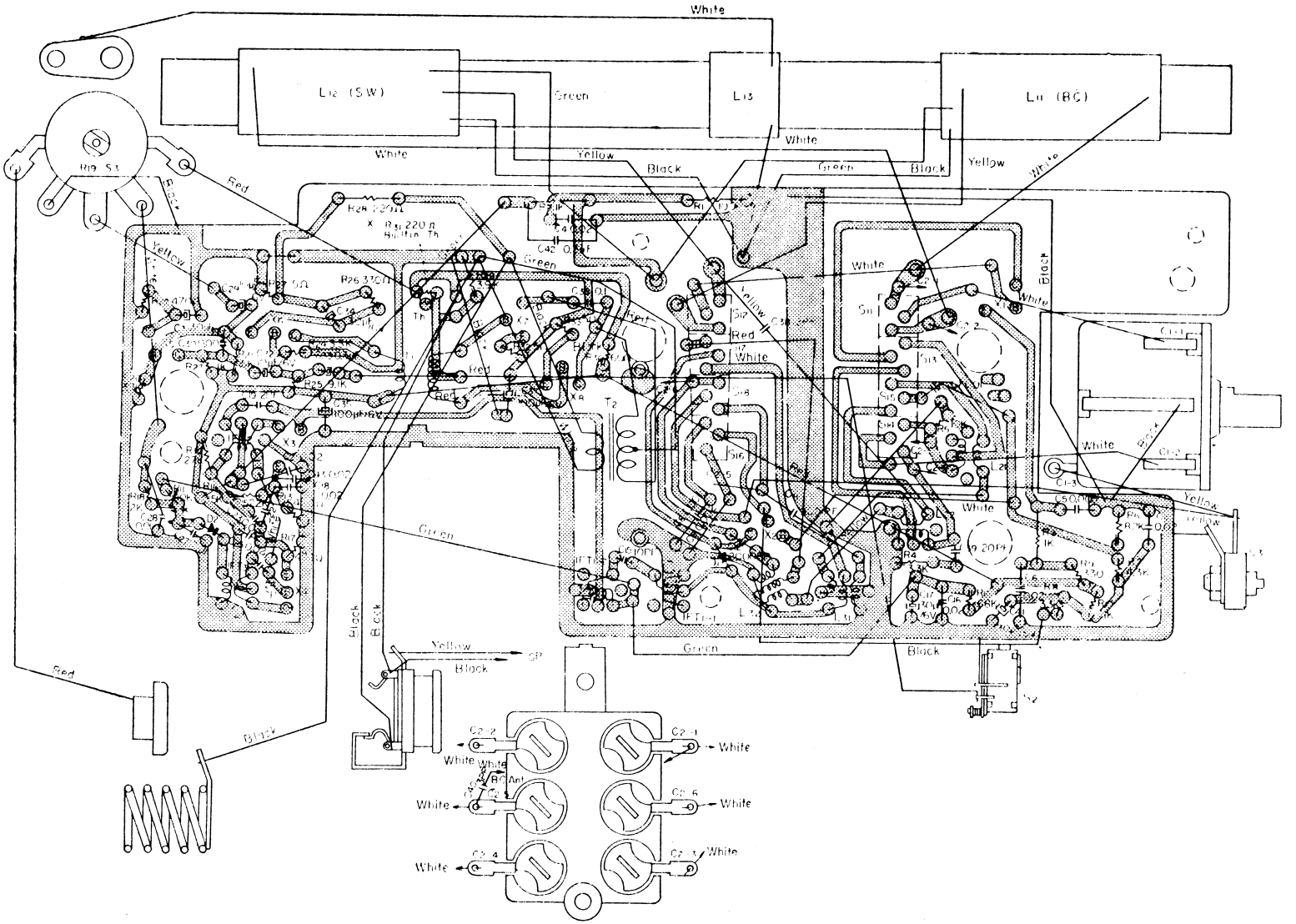
Mounting Diagram for TR-816 (Printed Side)