MODEL TG 4082

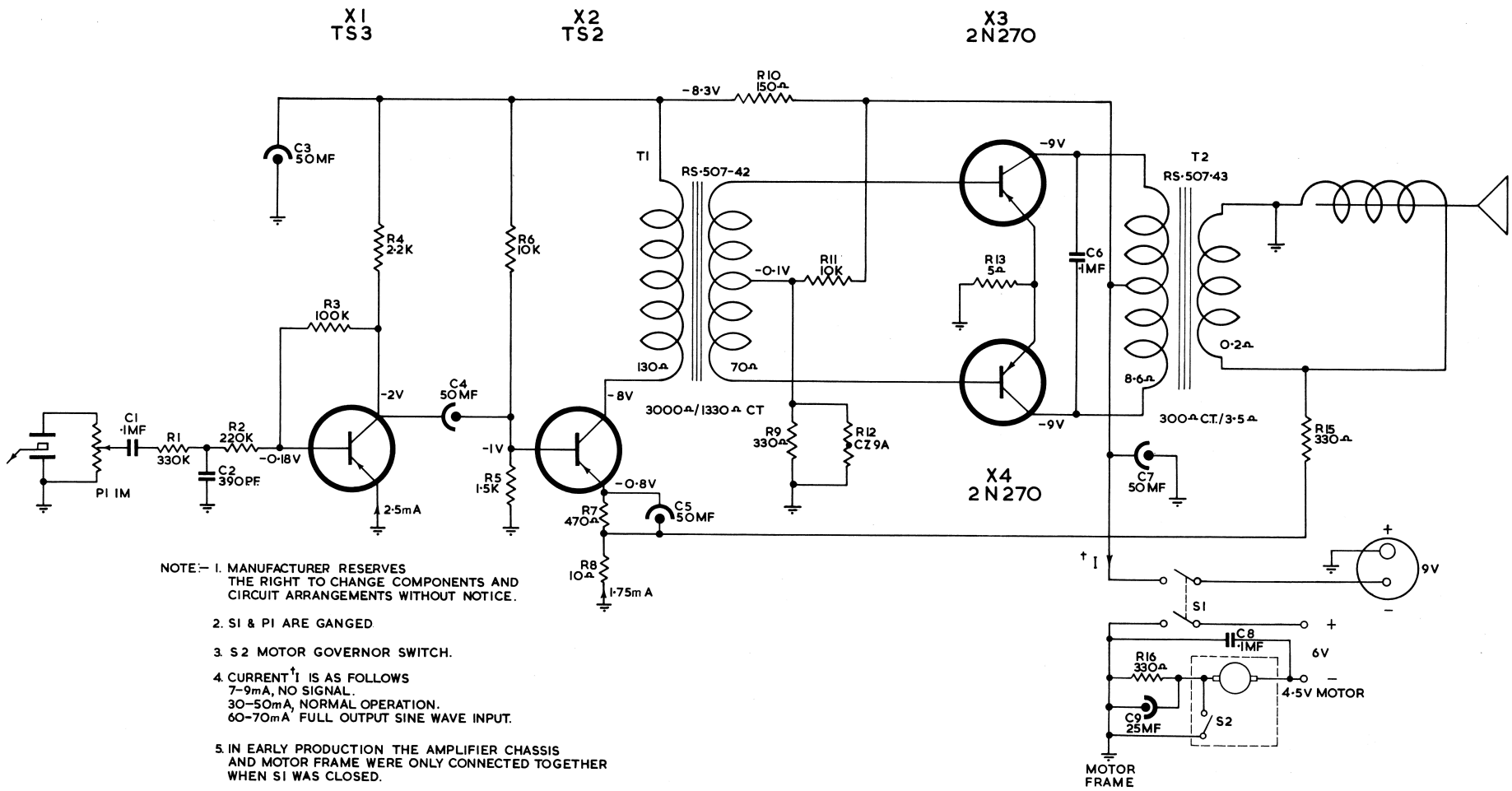

NOTE:– 1. MANUFACTURER RESERVES THE RIGHT TO CHANGE COMPONENTS AND CIRCUIT ARRANGEMENTS WITHOUT NOTICE.

2. S1 & P1 ARE GANGED.

3. S2 MOTOR GOVERNOR SWITCH.

4. CURRENT †I IS AS FOLLOWS
7–9mA, NO SIGNAL.
30–50mA, NORMAL OPERATION.
60–70mA FULL OUTPUT SINE WAVE INPUT.

5. IN EARLY PRODUCTION THE AMPLIFIER CHASSIS AND MOTOR FRAME WERE ONLY CONNECTED TOGETHER WHEN S1 WAS CLOSED.