# Electronic Parts List for TFM-95B

| Part No. | Symbol | Description |
|---|---|---|
| 1-501-016-00 | TA | Telescopic Antenna |
| 1-401-107-00 | $L_1$ | FM, Antenna Coil |
| 1-425-009-00 | $L_2$ | FM, RF Coil |
| 1-405-090-00 | $L_3$ | FM, Oscillator Coil |
| 1-401-127-00 | $L_4$ | MW, SW, Ferrite Bar Antenna |
| 1-401-128-00 | $L_5$ | MW, Car Antenna Coil |
| 1-401-129-00 | $L_6$ | SW, Car Antenna Coil |
| 1-405-204-00 | $L_7$ | MW, Oscillator Coil |
| 1-405-203-00 | $L_8$ | SW, Oscillator Coil |
| 1-407-006-10 | $L_9$, $C_9$ | FM, IF Trap Coil |
| 1-513-157-00 | $S_{1,2,3}$ | Band Setting Switch |
| 1-221-260-00 | $S_4$ | Power Switch (R30) |
| 1-403-221-00 | $IFT_{F-1}$ | FM, Double Tuned IFT |
| 1-403-075-00 | $IFT_{F-2}$ | FM, IF Transformer |
| 1-403-223-00 | $IFT_{F-3}$ | 〃 |
| 1-403-222-00 | $IFT_{F-4}$ | FM, Double Tuned IFT for Discriminator |
| 1-403-050-00 | $IFT_{A-1,2,3}$ | MW, IF Transformer |
| 1-423-043-00 | $T_1$ | Driver Transformer |
| 1-427-061-00 | $T_2$ | Output Transformer |
| 1-507-034-00 | $J_1$ | Det Out Jack } Triple Jack |
| 〃 | $J_2$ | Multiplex Out Jack } Triple Jack |
| 〃 | $J_3$ | Audio in Jack } Triple Jack |
| 1-507-030-00 | $J_4$ | Earphone Jack } Twin Jack |
| 〃 | $J_5$ | 〃 } Twin Jack |
| 1-502-048-00 | SP | Speaker |
| | $X_1$ | Transistor 2SA124 |
| | $X_2$ | 〃 2SA124 |
| | $X_3$ | 〃 2SA122 |
| | $X_4$ | 〃 2SA122 |
| | $X_5$ | 〃 2SA122 |
| | $X_6$ | 〃 2SD64 |
| | $X_7$ | 〃 2SD65 |
| | $X_8$ | 〃 2SB51 |
| | $X_9$ | 〃 2SB51 |
| | $D_1$ | Diode 1T23 |
| | $D_2$ | 〃 1T23 |
| | $D_3$ | 〃 1T23 |
| | $D_4$ | 〃 1T26 |
| | $D_5$ | 〃 1T26 |
| | Th | Thermistor S-90 |
| 1-203-131-00 | $R_1$ | Carbon Resistor 7.5 KΩ RD ¼ L ±5% |
| 1-203-049-00 | $R_2$ | 〃 2.2 KΩ 〃 |
| 1-203-031-00 | $R_3$ | 〃 1 KΩ 〃 |
| 1-203-039-00 | $R_4$ | 〃 1.5 KΩ 〃 |
| 1-203-006-00 | $R_5$ | 〃 27 Ω 〃 |
| 1-203-026-00 | $R_6$ | 〃 470 Ω 〃 |
| 1-203-026-00 | $R_7$ | 〃 470 Ω 〃 |
| 1-203-024-00 | $R_8$ | 〃 330 Ω 〃 |
| | $R_9$ | —deleted— |
| 1-203-091-00 | $R_{10}$ | Carbon Resistor 36 KΩ RD ¼ L ±5% |
| 1-203-069-00 | $R_{11}$ | 〃 10 KΩ 〃 |
| 1-203-049-00 | $R_{12}$ | 〃 2.2 KΩ 〃 |
| 1-203-018-00 | $R_{13}$ | 〃 220 Ω 〃 |
| 1-203-125-00 | $R_{14}$* | 〃 82 KΩ RD ¾ L ±50% |
| 1-203-065-00 | $R_{15}$ | 〃 5.6 KΩ RD ¾ L ±5% |
| 1-203-026-00 | $R_{16}$ | 〃 470 Ω 〃 |
| 1-203-006-00 | $R_{17}$ | 〃 27 Ω 〃 |
| 1-203-130-00 | $R_{18}$ | 〃 18 KΩ 〃 |
| 1-203-058-00 | $R_{19}$ | 〃 3.3 KΩ 〃 |
| 1-203-026-00 | $R_{20}$ | 〃 470 Ω 〃 |
| 1-203-049-00 | $R_{21}$ | 〃 2.2 KΩ 〃 |
| 1-203-065-00 | $R_{22}$ | 〃 5.6 KΩ 〃 |
| 1-203-024-00 | $R_{23}$ | 〃 330 Ω 〃 |
| 1-203-024-00 | $R_{24}$ | 〃 330 Ω 〃 |
| 1-203-031-00 | $R_{25}$ | 〃 1 KΩ 〃 |
| 1-203-031-00 | $R_{26}$ | 〃 1 KΩ 〃 |
| 1-203-031-00 | $R_{27}$ | 〃 1 KΩ 〃 |
| 1-203-039-00 | $R_{28}$ | 〃 1.5 KΩ 〃 |
| 1-221-155-00 | $R_{29}$ | Potentiometer (for AFC) 500 KΩ |
| 1-221-260-00 | $R_{30}$ | Volume Control 5 KΩ |
| 1-203-083-00 | $R_{31}$ | Carbon Resistor 22 KΩ RD ¼ L ±5% |
| 1-203-091-00 | $R_{32}$* | 〃 36 KΩ ±10% |
| 1-203-157-00 | $R_{33}$ | 〃 680 Ω RD ¾ L ±5% |
| 1-203-151-00 | $R_{34}$ | 〃 1.8 KΩ 〃 |
| 1-203-039-00 | $R_{35}$ | 〃 1.5 KΩ 〃 |
| 1-203-026-00 | $R_{36}$ | 〃 470 Ω 〃 |
| 1-203-058-00 | $R_{37}$ | 〃 3.3 KΩ 〃 |
| 1-203-131-00 | $R_{38}$ | Carbon Resistor 7.5 KΩ RD ¼ L ±5% |
| 1-203-018-00 | $R_{39}$ | 〃 220 Ω 〃 |
| 1-203-001-00 | $R_{40}$ | 〃 5.1 Ω 〃 |
| 1-203-154-00 | $R_{41}$ | 〃 75 Ω 〃 |
| 1-203-039-00 | $R_{42}$ | 〃 1.5 KΩ 〃 |
| 1-203-010-00 | $R_{43}$ | 〃 82 Ω 〃 |
| 1-203-584-00 | $R_{44}$ | 〃 3 Ω 〃 |
| 1-203-584-00 | $R_{45}$ | 〃 3 Ω 〃 |
| 1-203-018-00 | $R_{46}$ | 〃 220 Ω 〃 |
| 1-203-024-00 | $R_{47}$ | 〃 330 Ω 〃 |
| 1-203-155-00 | $R_{48}$ | 〃 5.1 KΩ 〃 |
| 1-203-027-00 | $R_{49}$ | 〃 560 Ω 〃 |
| 1-151-125-00 | $C_{1-1\sim4}$ | Tuning Capacitor 4 Gang |
| 1-141-122-00 | $C_{2-1\sim6}$ | Trimmer Capacitor 6 Unit |
| 1-141-053-00 | $C_{3-1\sim2}$ | Cylindrical Trimmer Capacitor |
| 1-101-115-00 | $C_4$ | Capacitor 30 pF ±10% Ceramic |
| 1-101-020-00 | $C_5$ | 〃 0.005 μF $^{+100\%}_{0}$ 〃 |
| 1-101-020-00 | $C_6$ | 〃 0.005 μF 〃 〃 |
| 1-101-020-00 | $C_7$ | 〃 0.005 μF 〃 〃 |
| 1-101-047-00 | $C_8$ | 〃 3 pF ±0.5 pF 〃 |
| 1-407-006-10 | $C_9$ | 〃 500 pF (built in FM-IF Trap Coil $L_9$) Styrol |
| 1-101-020-00 | $C_{10}$ | 〃 0.005 μF $^{+100\%}_{0}$ Ceramic |
| 1-101-049-00 | $C_{11}$ | 〃 5 pF ±0.5 pF 〃 |
| 1-101-155-00 | $C_{12}$ | 〃 70 pF ±10% 〃 |
| 1-101-020-00 | $C_{13}$ | 〃 0.005 μF $^{+100\%}_{0}$ 〃 |
| 1-101-154-00 | $C_{14}$ | 〃 60 pF ±10% 〃 |
| 1-101-020-00 | $C_{15}$ | 〃 0.005 μF $^{+100\%}_{0}$ 〃 |
| 1-105-104-00 | $C_{16}$ | 〃 0.002 μF ±20% Mylar |
| 1-101-069-00 | $C_{17}$ | 〃 4 pF ±0.5 pF Ceramic |
| 1-101-110-00 | $C_{18}$ | 〃 100 pF ±10% 〃 |
| | $C_{19}$ | 〃 180 pF built in IFT |
| 1-101-021-00 | $C_{20}$ | 〃 0.01 μF $^{+80\%}_{-20}$ 〃 |
| 1-103-071-00 | $C_{21}$ | 〃 2000 pF ±5% Styrol |
| 1-103-063-00 | $C_{22}$ | 〃 330 pF 〃 〃 |
| 1-101-021-00 | $C_{23}$ | 〃 0.01 μF $^{+80\%}_{-20}$ Ceramic |
| 1-121-104-00 | $C_{24}$ | 〃 10 μF 6 V Electrolytic |
| 1-101-021-00 | $C_{25}$ | 〃 0.01 μF $^{+80\%}_{-20}$ Ceramic |
| 1-101-045-00 | $C_{26}$ | 〃 1 pF ±0.5 pF 〃 |
| 1-101-114-00 | $C_{27}$ | 〃 15 pF ±10% 〃 |
| | $C_{28}$ | 〃 180 pF built in IFT |
| 1-101-021-00 | $C_{29}$ | 〃 0.01 μF $^{+80\%}_{-20}$ Ceramic |
| 1-101-021-00 | $C_{30}$ | 〃 0.01 μF 〃 〃 |
| 1-101-021-00 | $C_{31}$ | 〃 0.01 μF 〃 〃 |
| 1-101-021-00 | $C_{32}$ | 〃 0.01 μF 〃 〃 |
| 1-101-045-00 | $C_{33}$ | 〃 1 pF ±0.5 pF 〃 |
| 1-101-046-00 | $C_{34}$ | 〃 2 pF 〃 〃 |
| 1-101-113-00 | $C_{35}$ | 〃 80 pF ±10% 〃 |
| | $C_{36}$ | 〃 180 pF built in IFT |
| 1-101-021-00 | $C_{37}$ | 〃 0.01 μF $^{+80\%}_{-20}$ 〃 |
| 1-101-021-00 | $C_{38}$ | 〃 0.01 μF 〃 〃 |
| 1-101-022-00 | $C_{39}$ | 〃 0.02 μF 〃 〃 |
| 1-121-106-00 | $C_{40}$ | 〃 5 μF 6 V Electrolytic |
| 1-101-113-00 | $C_{41}$ | 〃 80 pF ±10% Ceramic |
| 1-101-030-00 | $C_{42}$ | 〃 200 pF ±5% 〃 |
| 1-101-030-00 | $C_{43}$ | 〃 200 pF 〃 〃 |
| 1-121-102-00 | $C_{44}$ | 〃 30 μF 6 V Electrolytic |
| 1-101-030-00 | $C_{45}$ | 〃 200 pF ±5% Ceramic |
| 1-101-022-00 | $C_{46}$ | 〃 0.02 μF $^{+80\%}_{-20}$ 〃 |
| 1-121-145-00 | $C_{47}$ | 〃 1 μF 6 V Electrolytic |
| 1-121-130-00 | $C_{48}$ | 〃 3 μF 3 V 〃 |
| 1-121-115-00 | $C_{49}$ | 〃 100 μF 6 V 〃 |
| 1-121-115-00 | $C_{50}$ | 〃 100 μF 6 V 〃 |
| 1-121-115-00 | $C_{51}$ | 〃 100 μF 6 V 〃 |
| 1-121-123-00 | $C_{52}$ | 〃 200 μF 6 V 〃 |
| 1-121-106-00 | $C_{53}$ | 〃 5 μF 6 V 〃 |
| 1-121-115-00 | $C_{54}$ | 〃 100 μF 6 V 〃 |
| 1-121-123-00 | $C_{55}$ | 〃 200 μF 6 V 〃 |
| 1-105-015-00 | $C_{56}$ | 〃 0.1 μF ±20% Mylar |
| 1-121-115-00 | $C_{57}$ | 〃 100 μF 6 V Electrolytic |
| 1-101-021-00 | $C_{58}$ | 〃 0.01 μF $^{+80\%}_{-20}$ Ceramic |
| 1-121-115-00 | $C_{59}$ | 〃 100 μF 6 V Electrolytic |
| 1-103-062-00 | $C_{60}$ | 〃 300 pF ±5% Styrol |
| 1-121-106-00 | $C_{61}$ | 〃 5 μF 6 V Electrolytic |
| 1-121-102-00 | $C_{62}$ | 〃 30 μF 6 V 〃 |
| 1-101-047-00 | $C_{63}$ | 〃 3 pF ±0.5 pF Ceramic |
| 1-121-102-00 | $C_{64}$ | 〃 30 μF 6 V Electrolytic |
| 1-101-020-00 | $C_{65}$ | 〃 0.005 μF $^{+100\%}_{0}$ Ceramic |

# SONY MODEL TFM-95B

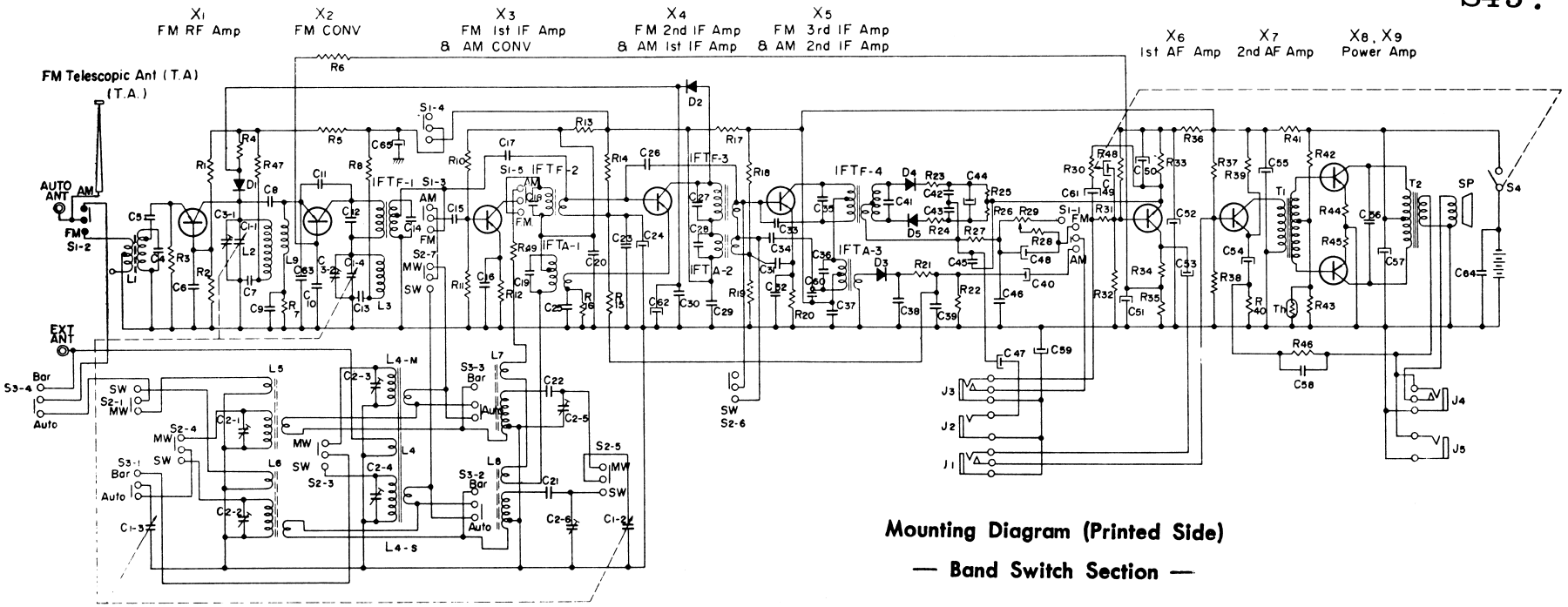


## Mounting Diagram (Printed Side)

## — Band Switch Section —

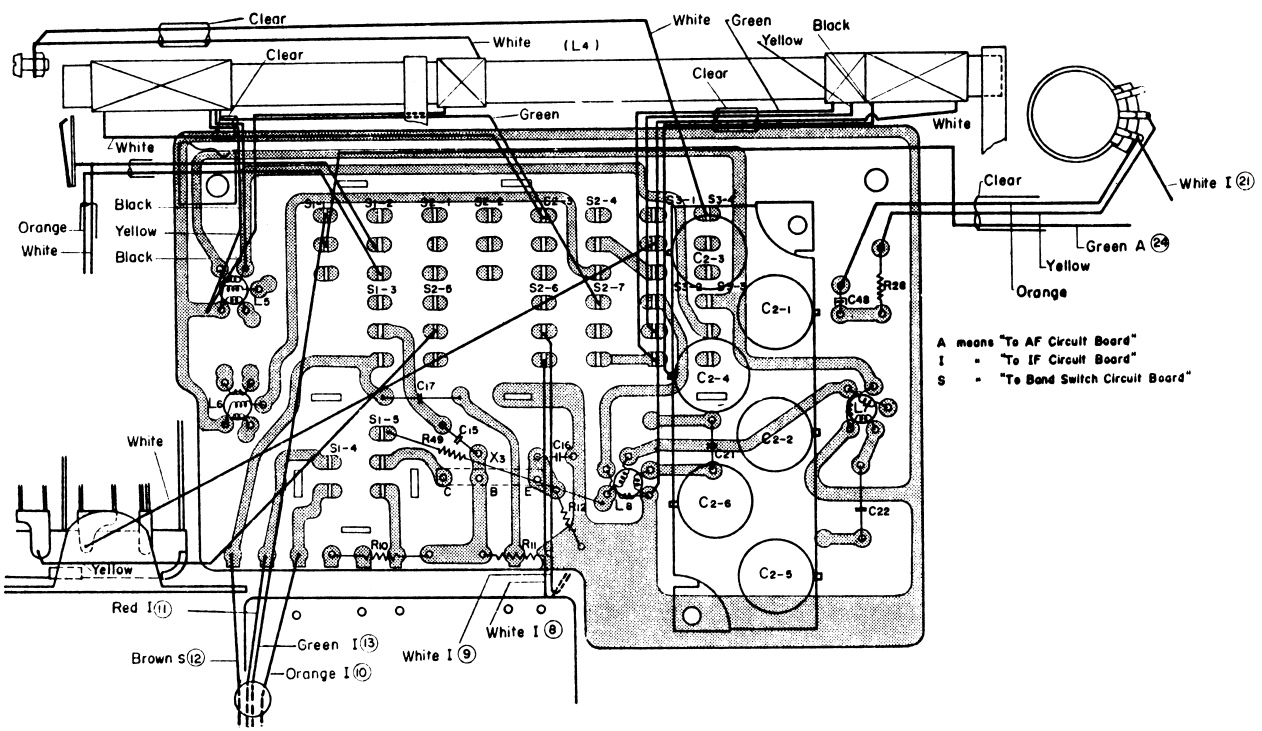

# SONY MODEL TFM-95B

## Mounting Diagram (Printed Side)

— AF Section —

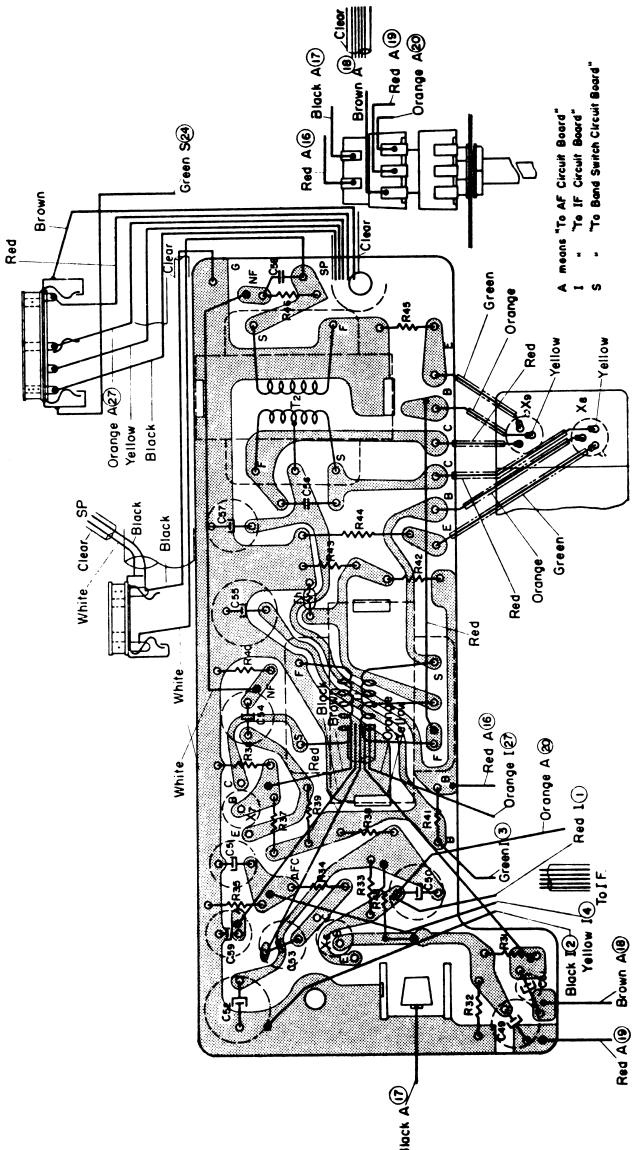

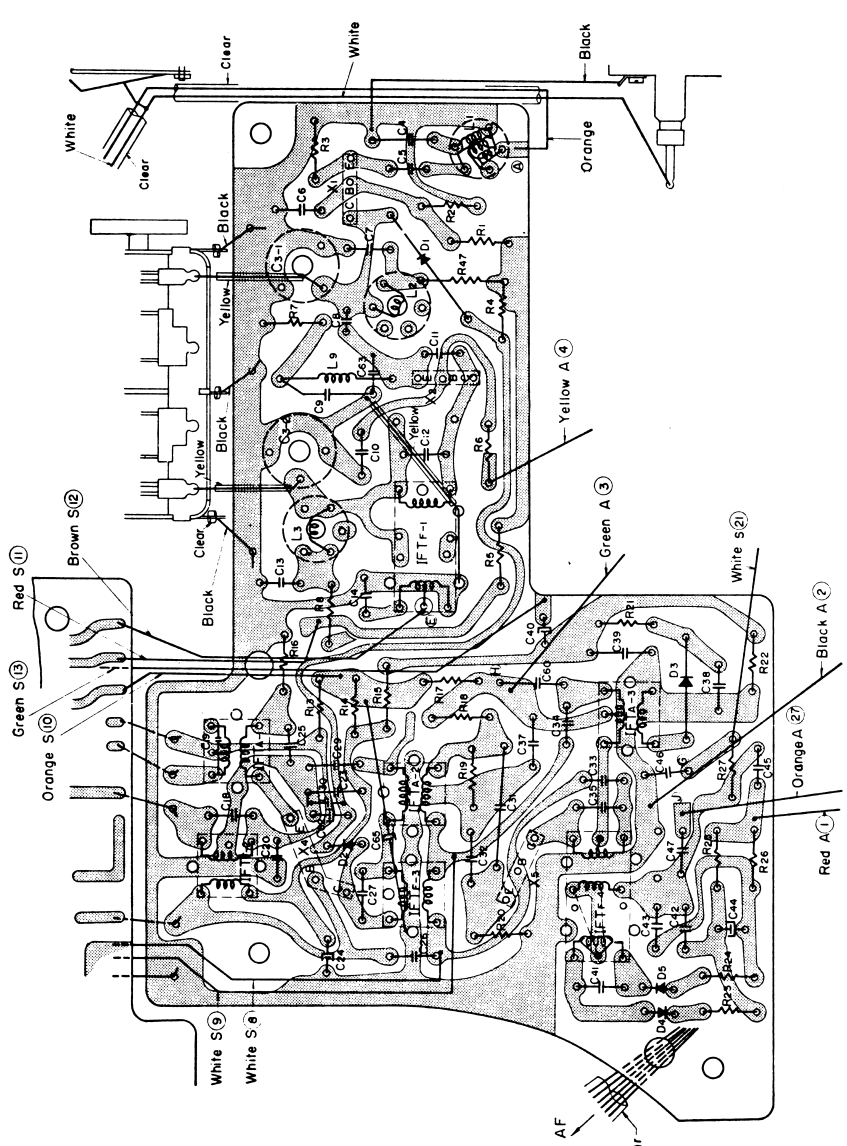
— IF Section —