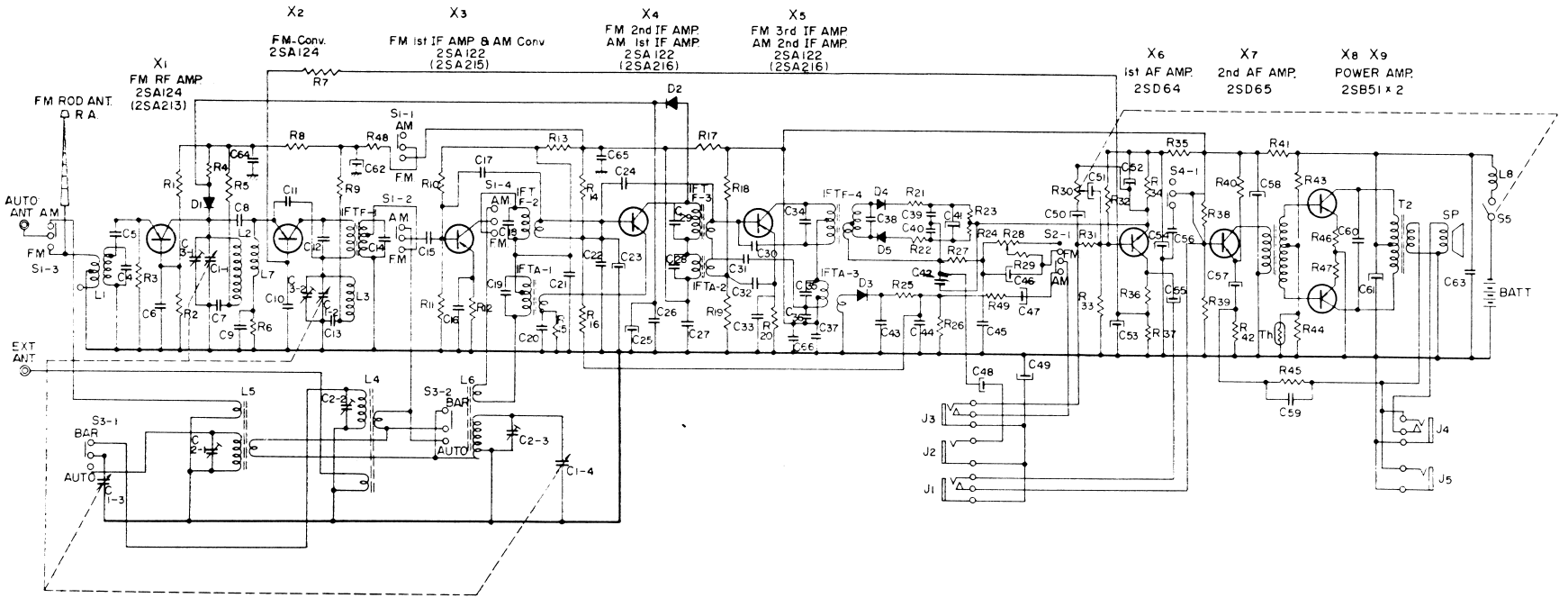
X1
FM RF AMP
2SA124
(2SA213)
X2
FM-Conv.
2SA124
X3
FM 1st IF AMP & AM Conv
2SA122
(2SA215)
X4
FM 2nd IF AMP.
AM 1st IF AMP.
2SA122
(2SA216)
X5
FM 3rd IF AMP
AM 2nd IF AMP.
2SA122
(2SA216)
X6
1st AF AMP.
2SD64
X7
2nd AF AMP.
2SD65
X8 X9
POWER AMP.
2SB51 x 2
FM ROD ANT.
D R A
AUTO ANT AM
FM
S1-3
EXT ANT
S1-1
AM
FM
S1-2
S1-4
S3-1
BAR
AUTO
S3-2
S4-1
S2-1
S5
SP
BATT
Th
J1
J2
J3
J4
J5

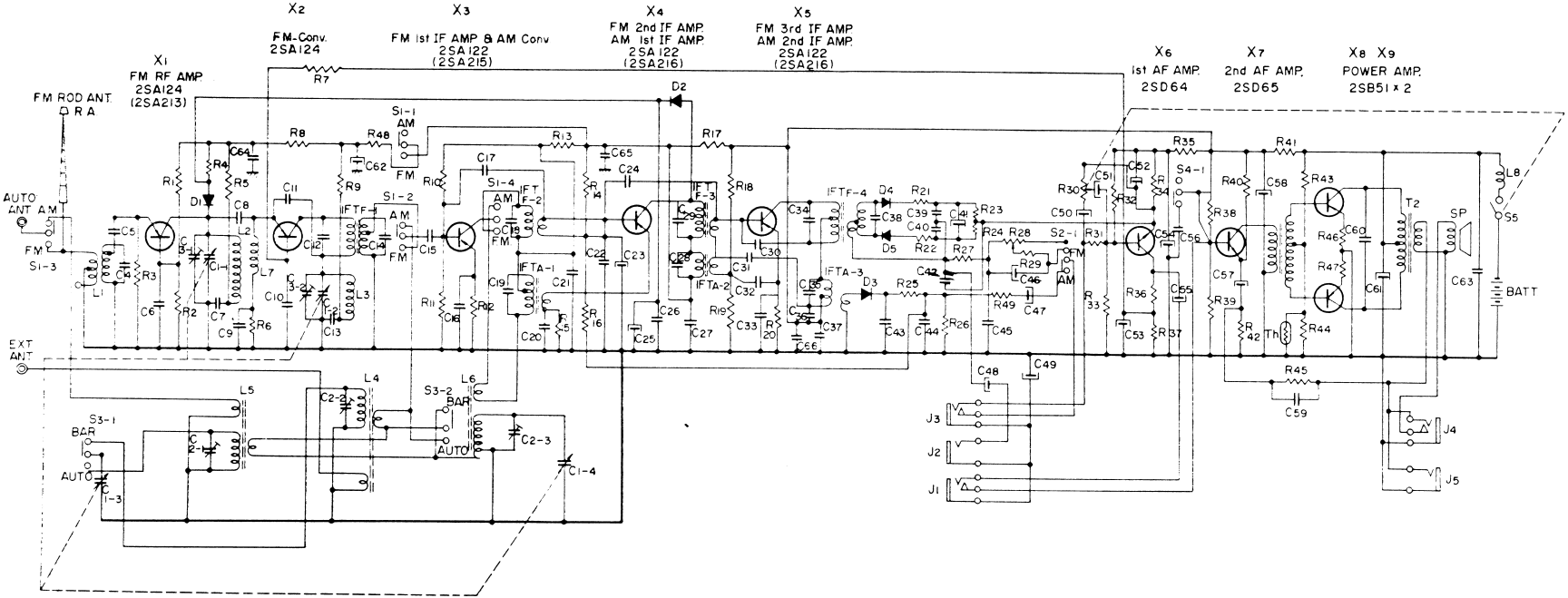
X1
FM RF AMP
2SA124
(2SA213)
X2
FM-Conv.
2SA124
X3
FM 1st IF AMP & AM Conv
2SA122
(2SA215)
X4
FM 2nd IF AMP.
AM 1st IF AMP.
2SA122
(2SA216)
X5
FM 3rd IF AMP
AM 2nd IF AMP.
2SA122
(2SA216)
X6
1st AF AMP.
2SD64
X7
2nd AF AMP.
2SD65
X8 X9
POWER AMP.
2SB51 x 2
FM ROD ANT.
AUTO ANT. AM
FM
EXT ANT
BATT
SP
Th
J1
J2
J3
J4
J5
S1-1
S1-2
S1-3
S1-4
S2-1
S3-1
S3-2
S4-1
S5
L8
T2
IFTF-1
IFTF-2
IFTF-3
IFTF-4
IFTA-1
IFTA-2
IFTA-3
BAR
AUTO
AM
FM