SONY TFM-825L

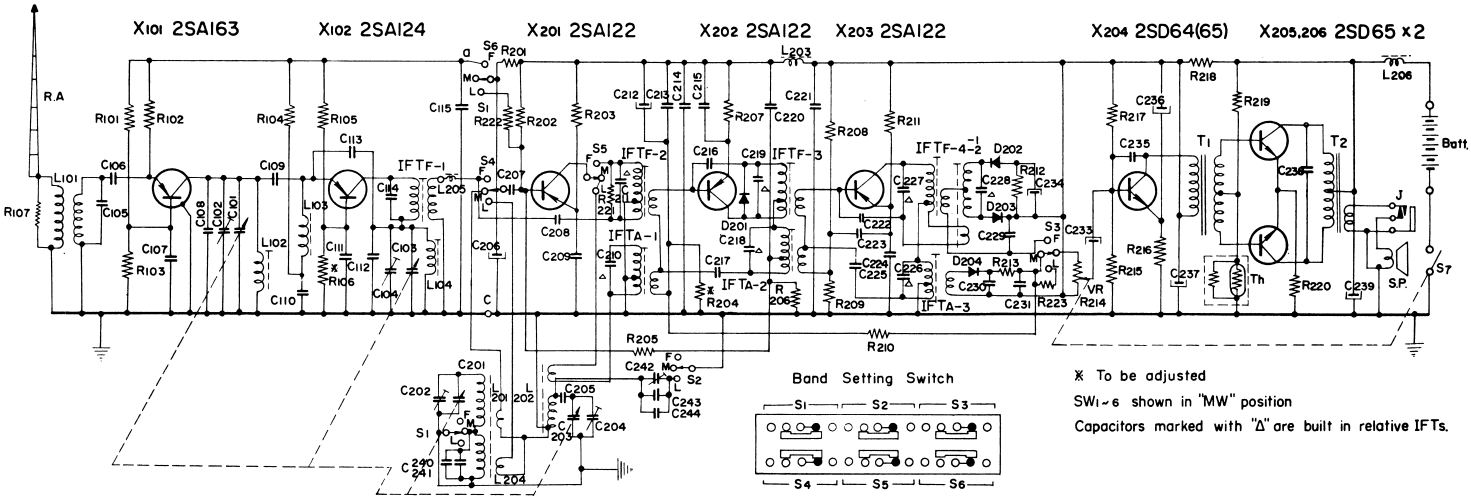

Part No.	Symbol	Description
1-501-038-11	Tel. ANT	Telescopic Antenna
1-401-165-11	L_{101}	FM Antenna Coil
1-425-046-11	L_{102}	FM RF Coil
1-409-025-11	L_{103}	FM IF Trap Coil
1-405-244-11	L_{104}	FM Oscillator Coil
1-401-180-11	L_{201}	MW Ferrite Bar Antenna
1-405-054-22	L_{202}	AM Oscillator Coil
1-407-029-11	L_{203}	Micro Inductor 47μH
1-401-180-11	L_{204}	LW Ferrite Bar Antenna
1-407-034-11	L_{205}	Micro Inductor 1μH
-029-11	L_{206}	〃 47μH
1-403-231-11	IFT_{F-1}	FM IF Transformer
-232-11	IFT_{F-2}	FM 〃
-233-11	IFT_{F-3}	FM 〃
-234-11	IFT_{F-4-1}	FM Discriminator
-234-21	IFT_{F-4-2}	FM 〃
-026-00	IFT_{A-1}	AM IF Transformer
-026-00	IFT_{A-2}	AM 〃
-027-00	IFT_{A-3}	AM 〃
1-423-062-11	T_1	Driver Transformer
1-427-090-11	T_2	Output Transformer
1-513-200-11	$S_{1\sim6}$	Band Setting Switch
	S_7	Power Switch (built in R_{214})
1-507-038-02	J	Earphone Jack
1-502-090-11	SP	Speaker
1-528-006-00	Batt.	Battery (9V)
	X_{101}	Transistor 2SA163
	X_{102}	〃 2SA124
	X_{201}	〃 2SA122
	X_{202}	〃 2SA122
	X_{203}	〃 2SA122
	X_{204}	〃 2SD65
	X_{205}	〃 2SD65
	X_{206}	〃 2SD65
	D_{201}	Diode 1T26
	D_{202}	〃 1T26
	D_{203}	〃 1T26
	D_{204}	〃 1T23
	Th	Thermistor CS-120
		Resistor
1-203-426-00	R_{101}	7.5KΩ 1/16W Carbon

Part No.	Symbol	Description
1-203-421-00	R_{102}	1KΩ 1/16W Carbon
-439-00	*R_{103}	12KΩ 〃 〃
-421-00	R_{104}	1KΩ 〃 〃
-426-00	R_{105}	7.5KΩ 〃 〃
-439-00	*R_{106}	12KΩ 〃 〃
-423-00	R_{107}	2.2KΩ 〃 〃
-594-00	R_{201}	100Ω 〃 〃
1-204-010-00	R_{202}	68KΩ 〃 〃
1-203-439-00	R_{203}	12KΩ 〃 〃
-618-00	*R_{204}	91KΩ 〃 〃
-427-00	R_{205}	10KΩ 〃 〃
-438-00	R_{206}	6.8KΩ 〃 〃
-420-00	R_{207}	470Ω 〃 〃
-997-00	R_{208}	3.6KΩ 〃 〃
-439-00	R_{209}	12KΩ 〃 〃
-425-00	R_{210}	5.6KΩ 〃 〃
-339-00	R_{211}	1.8KΩ 〃 〃
-427-00	R_{212}	10KΩ 〃 〃
-420-00	R_{213}	470Ω 〃 〃
1-221-381-11	R_{214}	5KΩ Volume Control
1-203-427-00	R_{215}	10KΩ 1/16W Carbon
-422-00	R_{216}	1.5KΩ 〃 〃
-634-00	R_{217}	33KΩ 〃 〃
-419-00	R_{218}	220Ω 〃 〃
-438-00	R_{219}	6.8KΩ 〃 〃
-418-00	R_{220}	10Ω 〃 〃
-629-00	R_{221}	15KΩ 〃 〃
1-204-010-00	R_{222}	68KΩ 〃 〃
1-203-997-00	R_{223}	3.6KΩ 〃 〃
		Capacitor
1-151-066-11	$C_{101,\ 103}$	Tuning Capacitor, 4 gang
-066-11	$C_{102,\ 104}$	Trimmer Capacitor, 4 unit
1-101-097-11	C_{105}	60PF Ceramic
-072-14	C_{106}	0.01μF 〃
-072-14	C_{107}	0.01μF 〃
-530-11	C_{108}	22PF 〃
-048-11	C_{109}	4PF 〃
1-103-058-12	C_{110}	500PF Styrol
1-101-072-14	C_{111}	0.01μF Ceramic
-530-11	C_{112}	22PF 〃
-048-11	C_{113}	4PF 〃
	C_{114}	50PF (built in IFT_{F-1})

Part No.	Symbol	Description
1-101-072-14	C_{115}	0.01μF Ceramic
1-151-066-11	$C_{201,\ 203}$	Tuning Capacitor, 4 gang
-066-11	$C_{202,\ 204}$	Trimmer Capacitor, 4 unit
1-103-024-11	C_{205}	130PF Styrol
1-121-105-00	C_{206}	10μF 10V Electrolytic
1-105-043-11	C_{207}	0.005μF Mylar
1-101-012-11	C_{208}	5PF Ceramic
1-105-043-11	C_{209}	0.005μF 〃
	C_{210}	150PF (built in IFT_{A-1})
	C_{211}	50PF (built in IFT_{F-2})
1-121-104-00	C_{212}	10μF 6V Electrolytic
1-101-072-14	C_{213}	0.01μF Ceramic
-072-14	C_{214}	0.01μF 〃
1-105-043-11	C_{215}	0.005μF Mylar
	C_{216}	
1-101-009-11	C_{217}	1PF Ceramic
	C_{218}	150 PF (built in IFT_{A-2})
	C_{219}	50PF (built in IFT_{F-3})
1-101-072-14	C_{220}	0.01μF Ceramic
-072-14	C_{221}	0.01μF 〃
-011-11	C_{222}	3PF 〃
-072-14	C_{223}	0.01μF 〃
1-105-043-11	C_{224}	0.005μF Mylar
1-101-011-11	C_{225}	3PF Ceramic
	C_{226}	150PF (built in IFT_{A-3})
	C_{227}	33PF (built in IFT_{F-4})
	C_{228}	130PF (built in IFT_{F-4})
1-101-074-11	C_{229}	0.04μF Ceramic
-073-14	C_{230}	0.02μF 〃
-072-14	C_{231}	0.01μF 〃
	C_{232}	—deleted—
1-121-178-00	C_{233}	3μF 12V Electrolytic
-112-00	C_{234}	10μF 3V 〃
1-103-217-12	C_{235}	100PF Styrol
1-121-110-00	C_{236}	30μF 10V Electrolytic
-110-00	C_{237}	30μF 10V 〃
1-101-073-14	C_{238}	0.02μF Ceramic
1-121-110-00	C_{239}	30μF 10V Electrolytic
1-101-120-11	C_{240}	30PF Ceramic
-011-11	C_{241}	3PF 〃
1-141-024-11	C_{242}	Trimmer Capacitor
1-103-228-11	C_{243}	120PF Styrol
	C_{244}	

* To be adjusted C_{216}, C_{244}: Used in some sets for adjustment purpose

SONY TFM-825L

Mounting Diagram for IF · AF Section

—Printed Side—

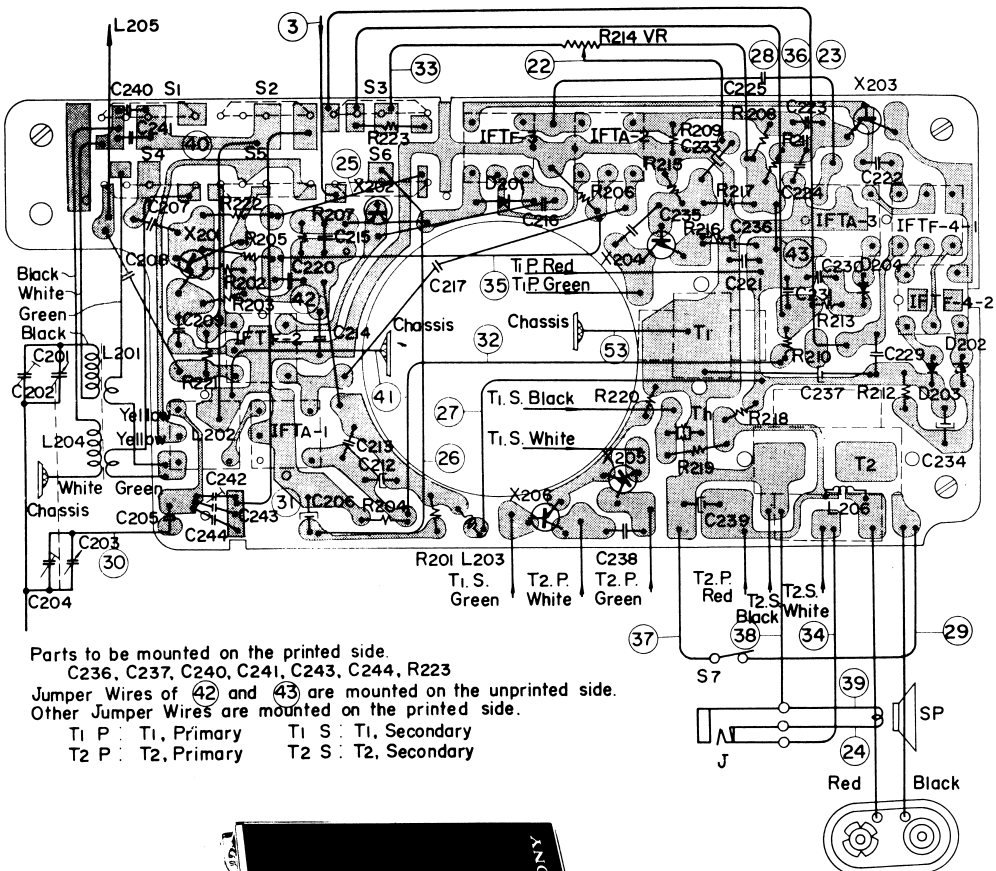

Parts to be mounted on the printed side.
C236, C237, C240, C241, C243, C244, R223
Jumper Wires of (42) and (43) are mounted on the unprinted side.
Other Jumper Wires are mounted on the printed side.

Ti P : Ti, Primary Ti S : Ti, Secondary
T2 P : T2, Primary T2 S : T2, Secondary

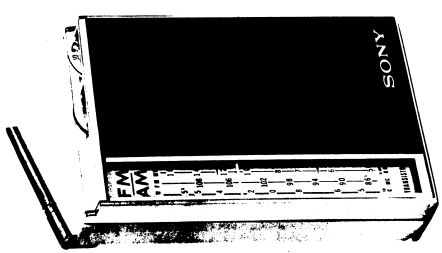

Diagram for Tuner Section

—Printed Side—

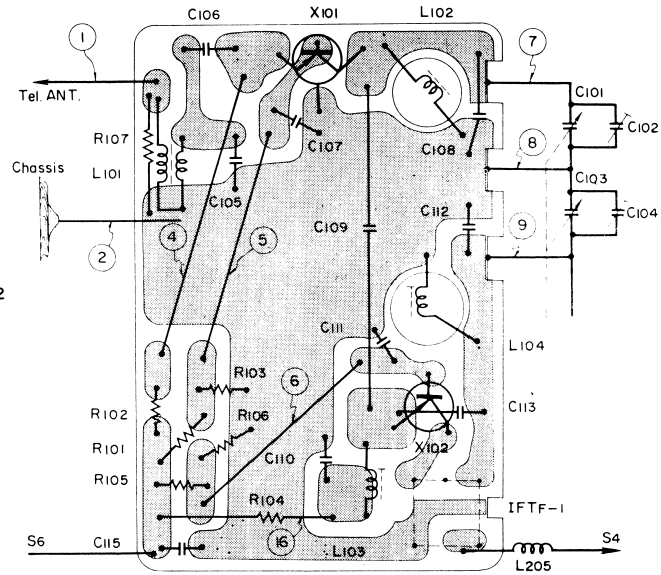

R107 and C113 are mounted on the printed side.
Jumper Wires of (4), (5) and (6) are mounted on the printed side.

P. V. C. Wire		
No.	Color	For Connection
①	White	Tel. ANT—L_{101}
②	Black	Chassis—L_{101}
③	Red	S_6—C_{113}
⑩	White	R_{214}—C_{233}
⑪	〃	S_1—C_{229}
⑭	〃	SP—J
⑮	Red	S_6—R_{222}
⑯	〃	S_6—C_{206}
⑰	〃	I_{203}—R_{218}
⑱	〃	R_{214}—R_{206}
⑲	〃	B—S_7
⑳	Yellow	C_{203}—C_{205}
㉑	〃	S_2—C_{243}
㉒	〃	R_{204}—R_{210}
㉓	〃	S_3—R_{214}
㉔	〃	T_2—J
㉕	Green	R_{204}—R_{208}
㉖	〃	S_5—C_{221}
㉗	〃	S_7—C_{239}

No.	Color	For Connection
㉘	Black	T_2—J
㉙	〃	T_2—SP
㉚	〃	S_2—L_{202}
㉛	〃	I_{203}—Chassis
㉜	〃	T_1—Chassis

Tinned Copper Wire		
No.	Dia.	For Connection
④	0.4φ	X_{101}—R_{102}
⑤	〃	X_{101}—R_{103}
⑥	〃	X_{102}—R_{106}
⑫	〃	C_{213}—C_{214}
⑬	〃	C_{221}—R_{217}

Braided Wire		
No.		For Connection
⑦	3 mm	C_{101}—L_{102}
⑧	〃	C_{101}(G)—G
⑨	〃	C_{103}—L_{104}