Service
Service
Service

Service Manual

FOUR TRACK AUTO REVERSE STEREO CASSETTE PLAYER

12 V

SPECIFICATIONS

NUMBER OF TRACKS	4 TRACKS 2 CHANNELS
TAPE CARTRIDGE	STEREO/MONO COMPACT CASSETTE
TAPE SPEED	4.76 cm/sec.
POWER OUTPUT	4 WATTS
SPEAKER IMPEDANCE	4 ohms PER CHANNEL
POWER SUPPLY	12 VOLTS NEGATIVE TO EARTH
CURRENT	0.6 AMP. APPROX.
SEMI CONDUCTORS	4 IC's
TAKE UP TORQUE	45 - 60 gcm
PINCHROLLER PRESSURE	300 - 400 g

Subject to modification
4802 725 17097

A DIVISION OF PHILIPS INDUSTRIES LIMITED (INC. IN N.S.W.)

PHILIPS

EXPLODED VIEW (CASSETTE DECK MDK-44/8)

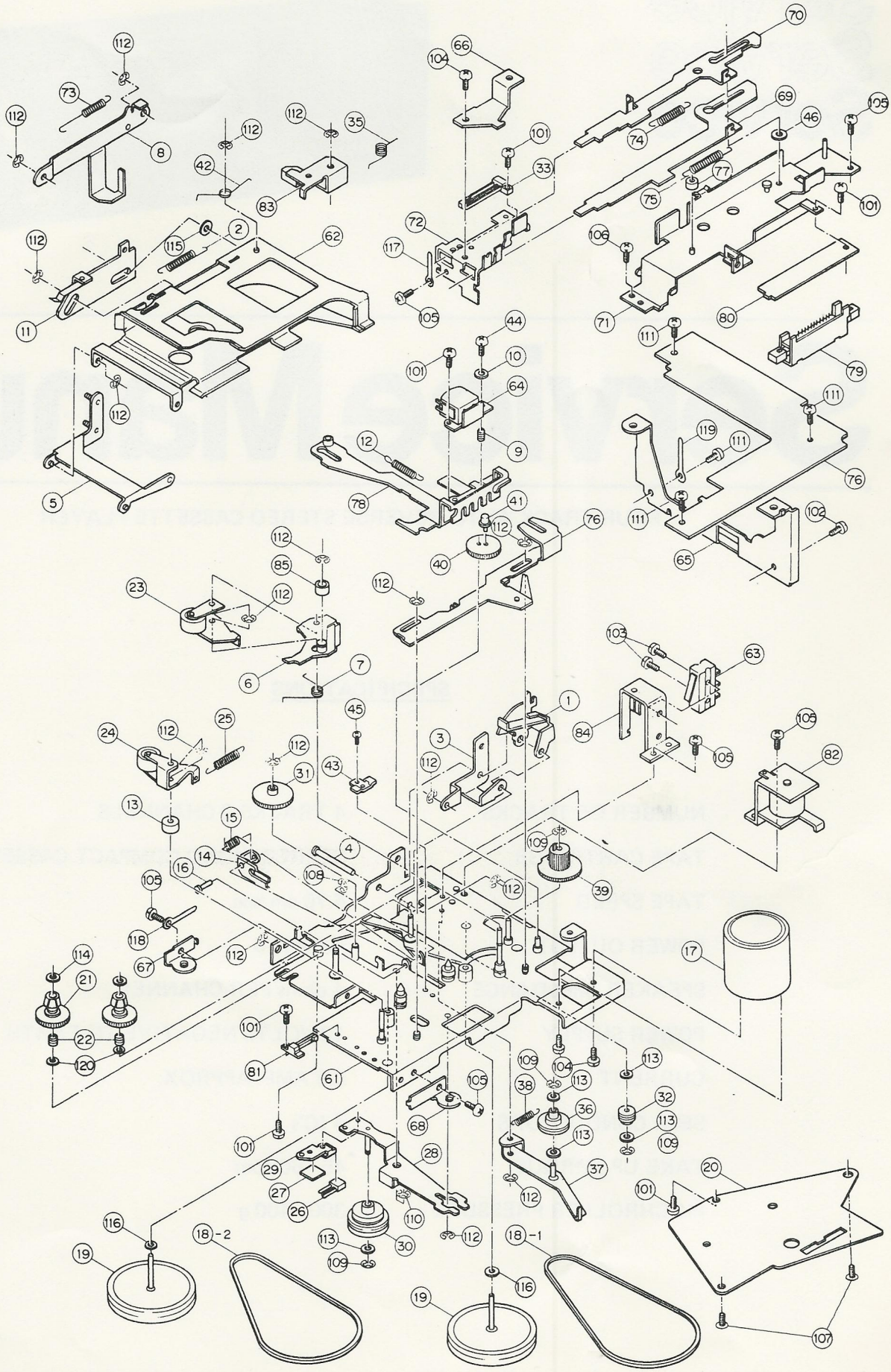

Fig. 9

EXPLODED VIEW (TAPE PLAYER)

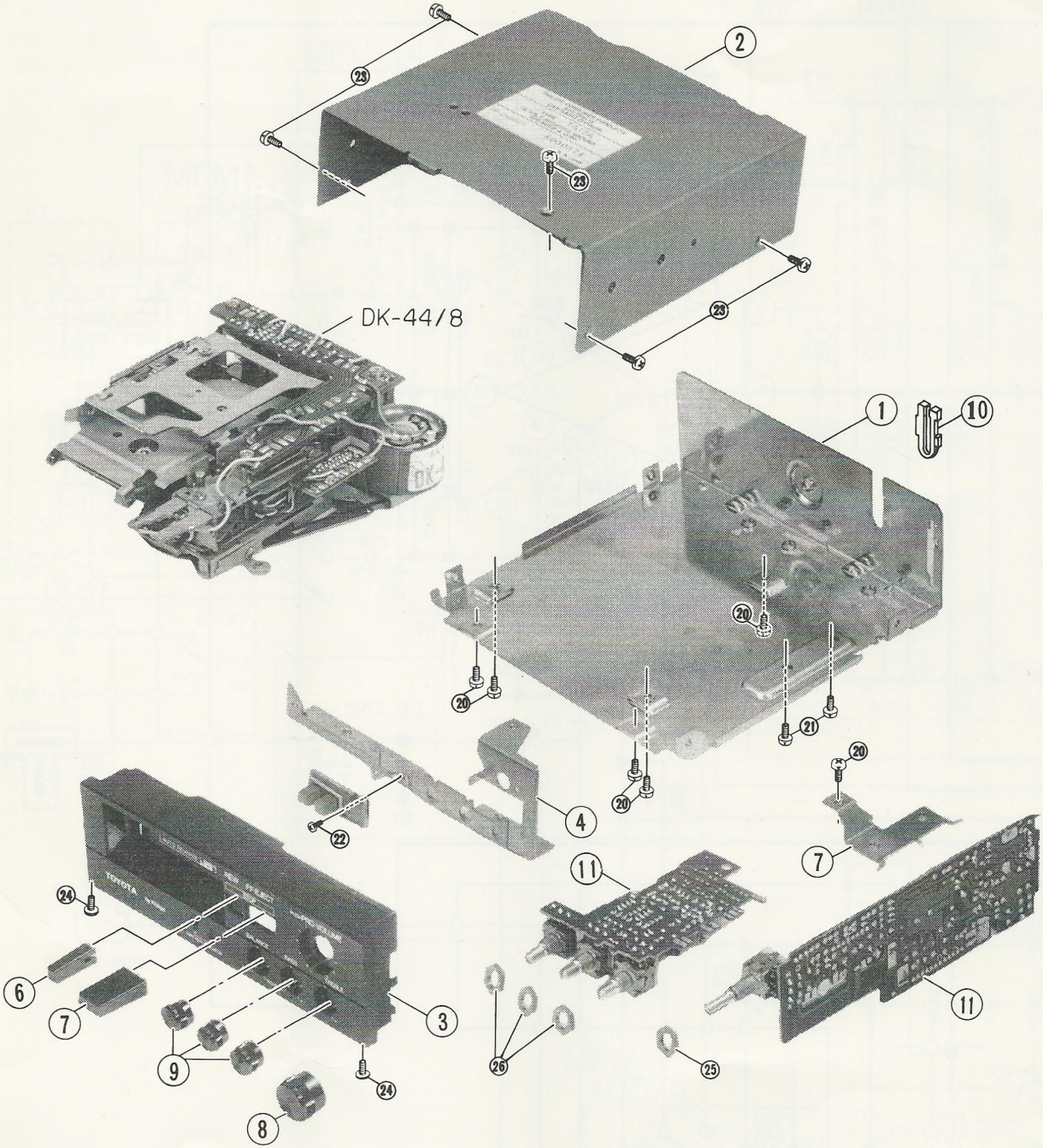

Fig. 8

CASSETTE DECK UNIT (RN-MDK-44/8)

Ref. No.	Description	Service Code
RV1.2	Pot. Bass, Treble	4802 102 17074
RV3	Pot. Balance	4802 102 17075
RV4.S4	Pot. Vol/Programme	4802 102 17076
IC1	I.C. M51521L	4822 209 80573
IC2	I.C. MB3722M	4802 209 87762
IC3	I.C. DN6838	4822 209 80748
IC4	I.C. AN6248	4802 209 87466
TR1.2	TRSTR. 2SC536	4802 130 37422
TR3	TRSTR. 2SC2594	4802 130 47433
D1.2	L.E.D. 9NG4	4802 130 37536
D3.4	Diode 1S1555	4822 130 30613
D5	Diode SR1K2	4802 130 37022
D6	Diode 10E1	4822 130 30684
A1	Head	4802 249 37028
M1	Motor	4802 361 27154
S1	Switch	4802 277 17139
RY1	Relay	4802 280 27033
—	Escutcheon (with flap)	4802 454 17183
	Button FF/Eject	4802 411 27174
	Button Rewind	4802 411 27175
	Knob Vol/Programme	4802 410 27651
	Knob Bass/Treble	4802 410 27652
18-1	Belt	4802 358 37039
18-2	Belt	4802 358 37003

Ref. No.	Description		Service Code
S2	Switch, Leaf		4802 277 17029
S3	Switch, Leaf		4802 278 97078
S5	Switch		4802 271 37041
2	RN-MSC-293	Spring	4802 492 37461
7	RN-MSC-295	Spring	4802 492 37462
9	RN-N SC-221	Spring	4802 492 37385
12	RN-MSC-296A	Spring	4802 492 37463
15	RN-MSC-297	Spring	4802 492 37464
19	RN-MUF-1001	Flywheel	4802 528 67103
23	RN-MKR-12A	Pinchroller assv.	4802 403 47089
24	RN-MKR-13B	Pinchroller assv.	4802 403 47091
25	RN-MSC-299	Spring	4802 492 37466
30	RN-MKS-18C	Slip mechanism	4802 402 37006
31	RN-MUG-24	Gear	4802 528 17272
35	RN-MSC-301	Spring	4802 482 37467
36	RN-MUG-25	Gear	4802 528 17273
38	RN-MSC-303	Sring	4802 492 37468
39	RN-MUG-26B	Gear	4802 522 27019
40	RN-MUG-27	Gear	4802 522 27021
42	RN-MSC-268	Spring	4802 492 37425
43	RN-MSP-166	Spring	4802 492 37473
62	RN-MHE-1062	Holder	4802
73	RN-MSC-317B	Spring	4802
74	RN-MSC-302	Spring	4802 492 37471
75	RN-MSC-1019	Spring	4802 492 37472
82	RN-E EM-1007A	Solenoid	4802 282 37009

CONNECTIONS

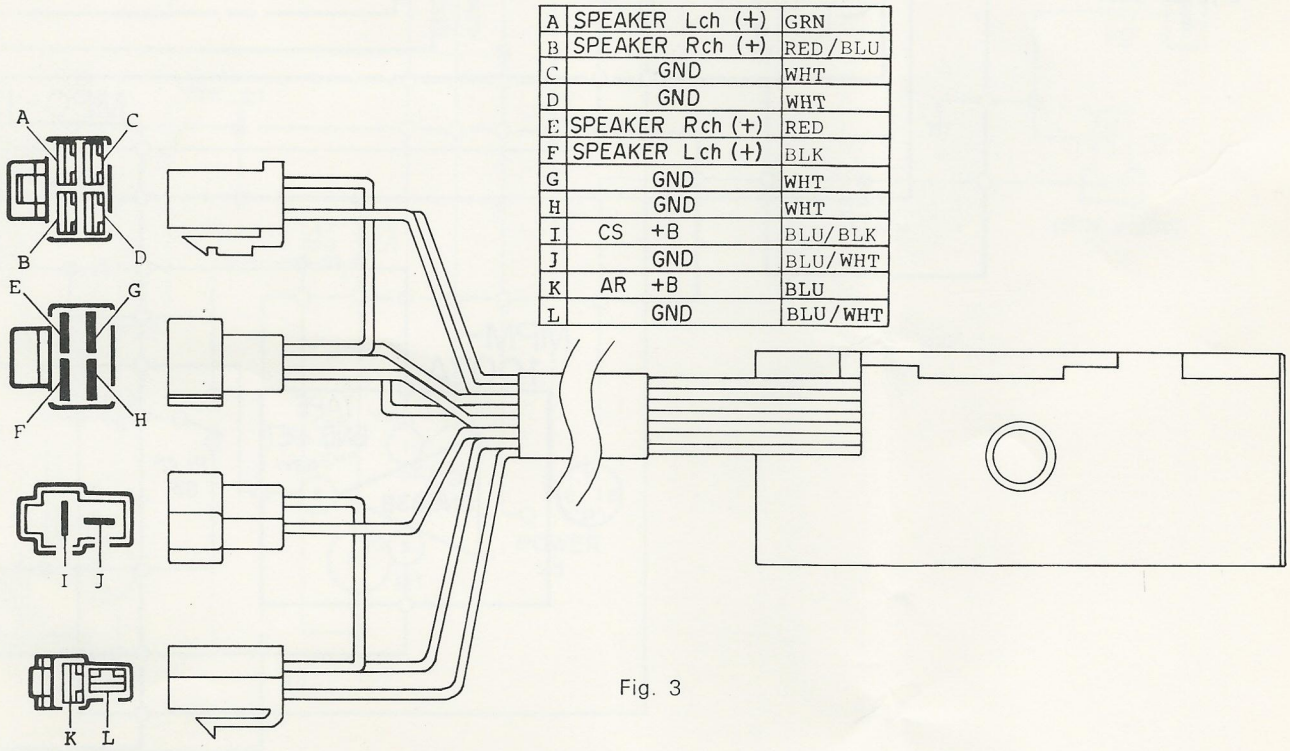

A	SPEAKER Lch (+)	GRN
B	SPEAKER Rch (+)	RED/BLU
C	GND	WHT
D	GND	WHT
E	SPEAKER Rch (+)	RED
F	SPEAKER Lch (+)	BLK
G	GND	WHT
H	GND	WHT
I	CS +B	BLU/BLK
J	GND	BLU/WHT
K	AR +B	BLU
L	GND	BLU/WHT

Fig. 3

ADJUSTMENT FOR TAKE-UP TORQUE

1. Measure the take-up torque by inserting the torque gauge cartridge into the slip mechanism.
2. The torque should be always between **40** and **70** g-cm.
   The roller has five positions for the spring to be set.
3. Set the spring in one of ①—⑤ positions for the sufficient value.
   The take-up torque may vary 5 g-cm per one step of the roller.

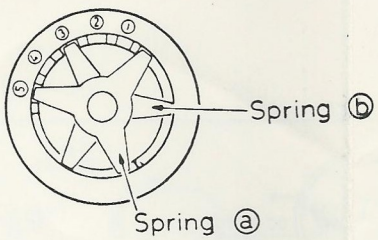

Fig. 4

PLAYBACK HEAD ADJUSTMENT (Azimuth)

1. Carefully adjust the azimuth adjust screw for maximum volume and treble tone without using test instrument.
2. If test tape is not available, use a stereo tape with some high treble tones and follow the same procedure as outlined above.

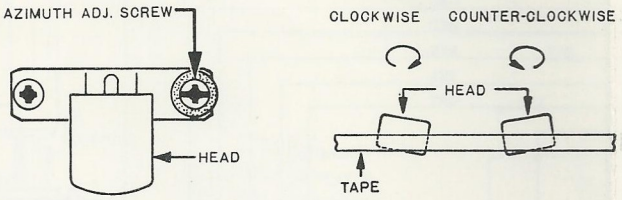

Fig. 5

BELT REPLACEMENT

1. Remove two screws (2×4mm) fixing PC board in lower part of deck.
2. Remove two flat screws [1] (2.6×3mm) and cover, then belt [A] can be replaced.
3. Remove E ring [2] and spring [3] than belt [B] can be replaced.

MOTOR REPLACEMENT

Remove two screws [4] (2.6×3mm) and belt, then motor can be replaced.

SLIP MECHANISM REPLACEMENT

Remove E ring, washer [5] and belt, then slip mechanism can be replaced.

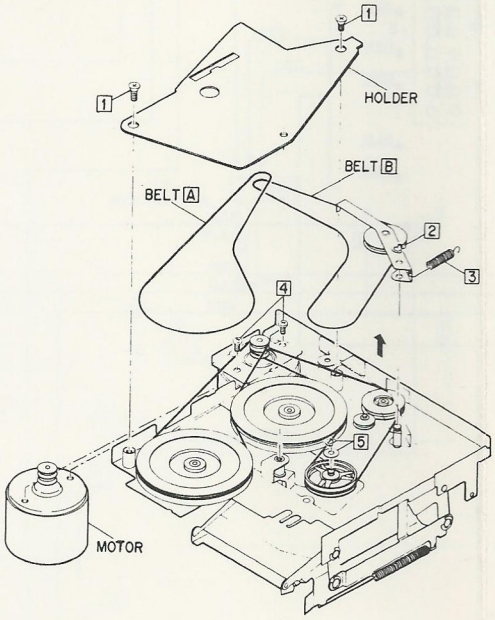

Fig. 6

HEAD REPLACEMENT

1. Remove screws [5] (2.6×2mm) and [6] (2.6×3mm).
2. Remove screw [9] (2.6×3mm) fixing PC board and holder unit.
3. Remove screw [7] (2×4mm) fixing head and special screw [8] (2×6mm).
   Unsolder flexible PC board, then head can be replaced.

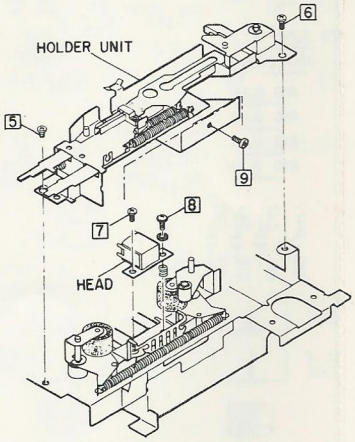

Fig. 7

SCHEMATIC

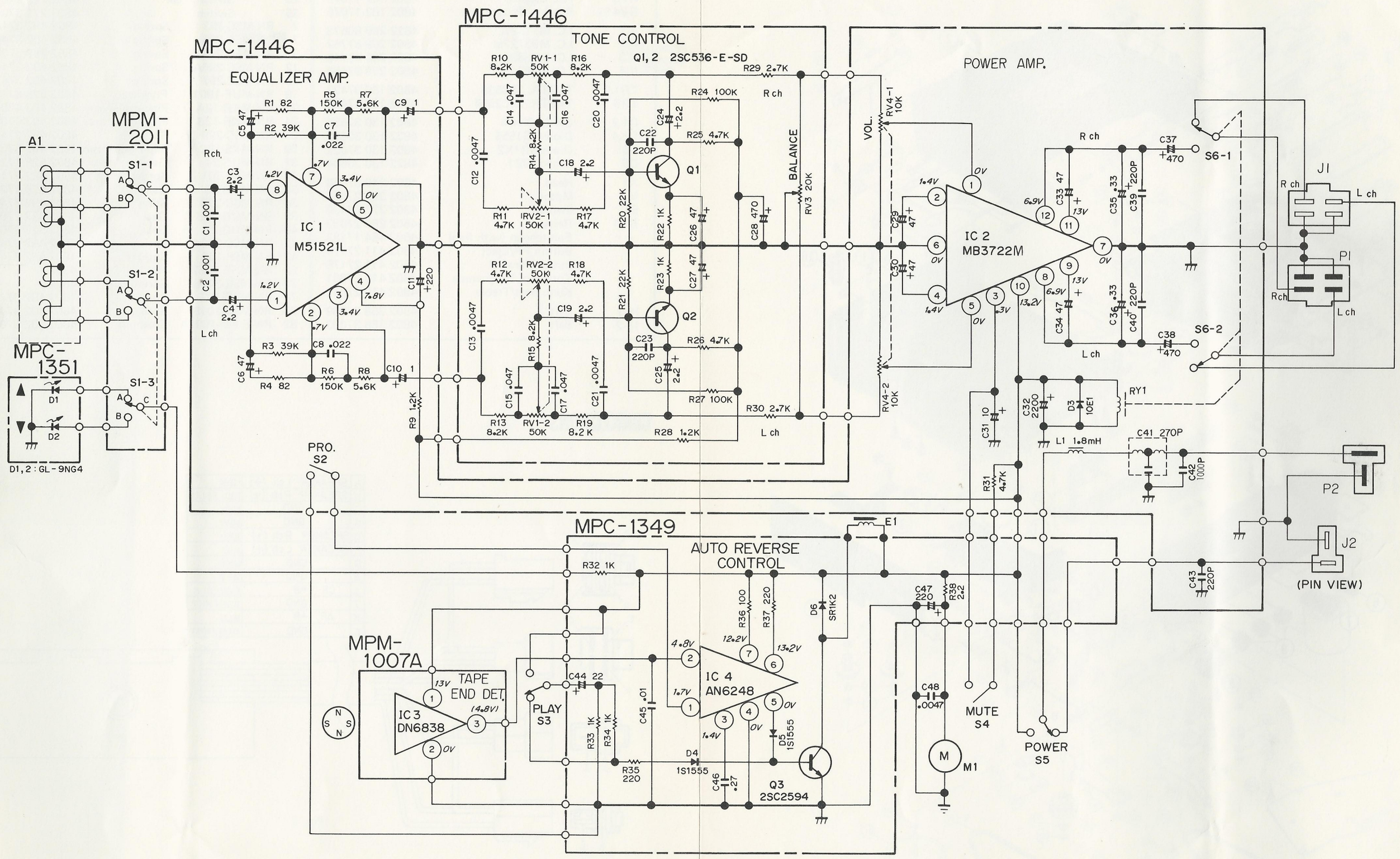

Fig. 1

NOTES :
1. All capacitance in Micro farad, $P=10^{-12}$
2. All resistance in ohm, $K=10^{3}$
3. All inductance in henry, $m=10^{-3}$, $\mu=10^{-6}$
4. DC voltage against the chassis measured with 100k ohm/volt meter, power supply set at + 13.2 VDC, no signal input.

WIRING ON PC BOARDS

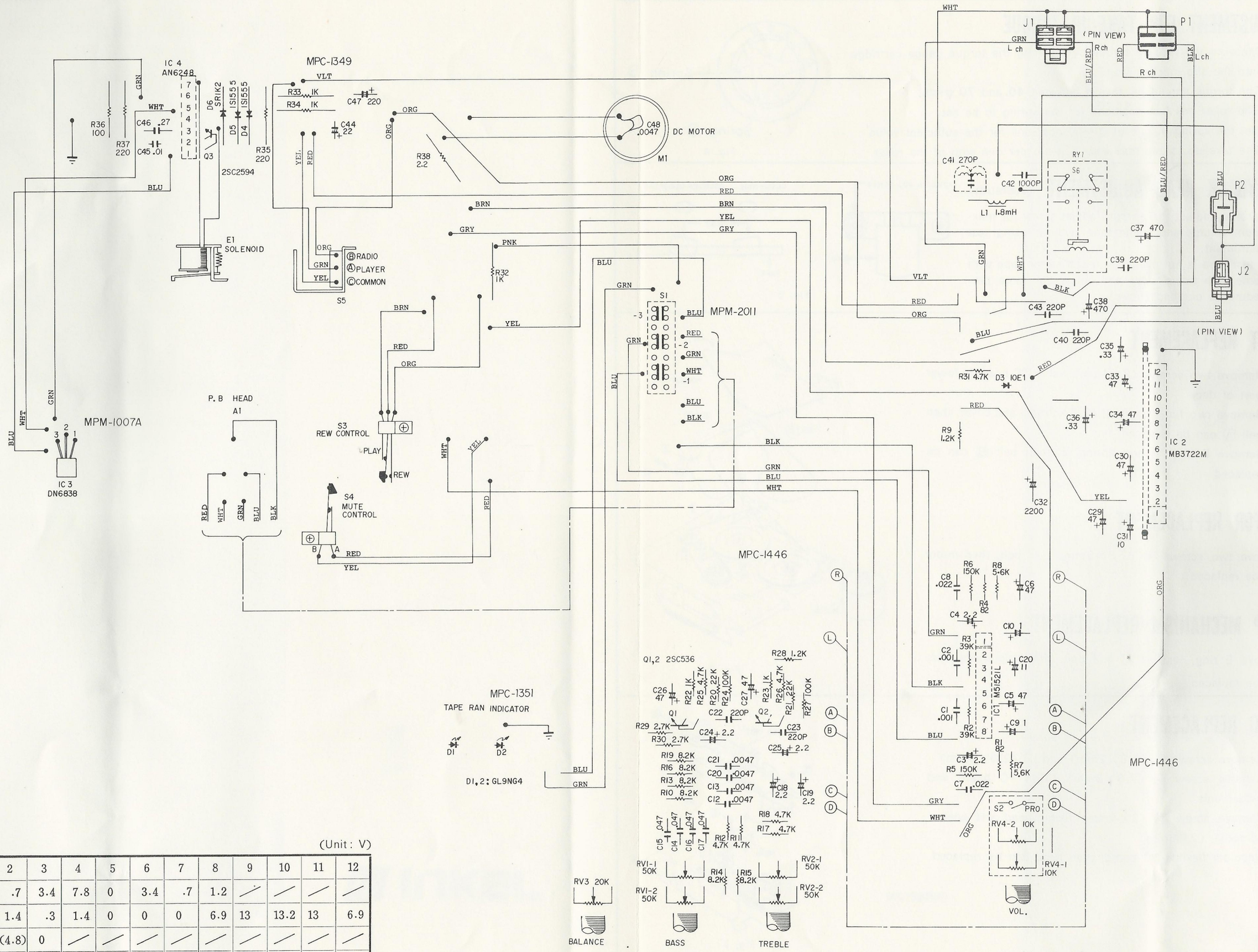

Fig. 2

(Unit: V)

IC No. \ Pin No.	1	2	3	4	5	6	7	8	9	10	11	12
IC 1	1.2	.7	3.4	7.8	0	3.4	.7	1.2	/	/	/	/
IC 2	0	1.4	.3	1.4	0	0	0	6.9	13	13.2	13	6.9
IC 3	13	(4.8)	0	/	/	/	/	/	/	/	/	/
IC 4	1.7	(4.8)	1.4	0	0	13.2	12.2	—	—	—	—	—