Car Stereo Cassette Player TA10A

Service
Service
Service

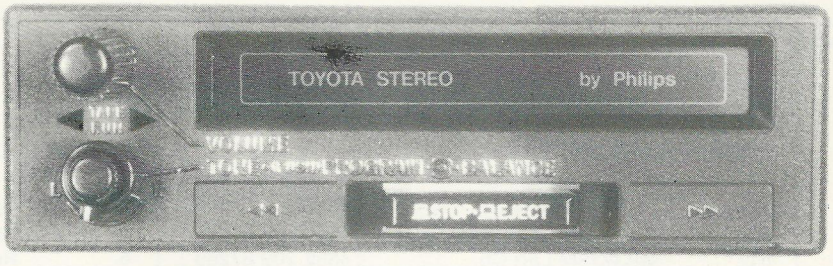

Service Manual

FOUR TRACK AUTO REVERSE STEREO CASSETTE PLAYER

12 V

SPECIFICATIONS

NUMBER OF TRACKS	4 TRACKS 2 CHANNELS
TAPE CARTRIDGE	STEREO/MONO COMPACT CASSETTE
TAPE SPEED	4.76 cm/sec.
POWER OUTPUT	4 WATTS
SPEAKER IMPEDANCE	4 ohms PER CHANNEL
POWER SUPPLY	12 VOLTS NEGATIVE TO EARTH
CURRENT	0.56 AMP. APPROX.
SEMI CONDUCTORS	6 IC's 5 DIODES
TAKE UP TORQUE	45 - 60 gcm
PINCHROLLER PRESSURE	300 - 400 g

Subject to modification

4802 725 17064

PHILIPS

REPLACEMENT PARTS

Ref. No.	Description	Service Code

SEMICONDUCTORS

IC1	MB3106M	4802 209 87396
IC2	MB3713M Left Ch.	4802 209 87259
IC3	MB3712M Right Ch.	4802 209 87278
IC4-5	DN6838	4822 209 80748
IC6	AN6250	4802 209 87185
D1-2	LED. LN312	4802 130 37189
D3-4-5	SR1K2	4802 130 37022

CAPACITORS

NOTE: All Capacitors are standard values and tolerances.

RESISTORS

NOTE: All Resistors are standard values and tolerances unless specified otherwise.

RV1-2-3	Balance + Tone + Switch	4802 102 27064
RV4-5	Volume.	4802 101 37029

MISCELLANEOUS ELECTRICAL

A1	Head, Playback LMT	4802 249 37011
E1	Solenoid	4802 281 57012
M1	Motor	4802 361 27046
S1-4	Switch, Programme	4802 277 67038
S-6	Switch, Micro	4822 271 30025
RY1	Relay	4802 280 87008
RY2	Relay	4802 280 87005

MISCELLANEOUS MECHANICAL

3	Escutcheon (with flap)	4802 459 57093
4	Knob, Balance	4802 411 27153
5	Knob, Volume	4802 413 37275
6	Knob, Tone, Programme	4802 410 47104
8	Button, Stop/Eject	4802 410 27398

CASSETTE DECK

2	Spring	4802 492 37384
4	Spring, Azimuth	4802 492 37385
6	Roller	4802 528 77212
7	Spring	4802 492 37386
8	Roller	4802 528 77213
9	Pinchroller Assy. (L)	4802 403 47032
10	Pinchroller Assy. (R)	4802 403 47034
11	Spring	4802 492 37387
12	Spring	4802 492 37388
16	Spring	4802 492 37389
22	Belt	4802 358 37051
23	Flywheel	4802 528 67065
24	Supporter, Flywheel	4802 466 87126
25	Pulley	4802 528 87088
26	Idler Mechanism (L)	4802 403 47039
27	Idler Mechanism (R)	4802 403 47041
28	Spring	4802 492 37391
30	Idler Mechanism	4802 403 47044
32	Spring	4802 492 37392
33	Clutch, Slip Mechanism	4802 528 17086
34	Sub Chassis, Clutch	4802 403 27096
35	Spring	4802 492 37393
37	Spring	4802 492 37394
38	Cassette Guide (L)	4802 403 57169
39	Cassette Guide (R)	4802 403 57171
43	Spring	4802 492 37395
44	Spring	4802 492 37396
55	P.C. Board (IC4-5)	4802 214 57097

CASSETTE DECK

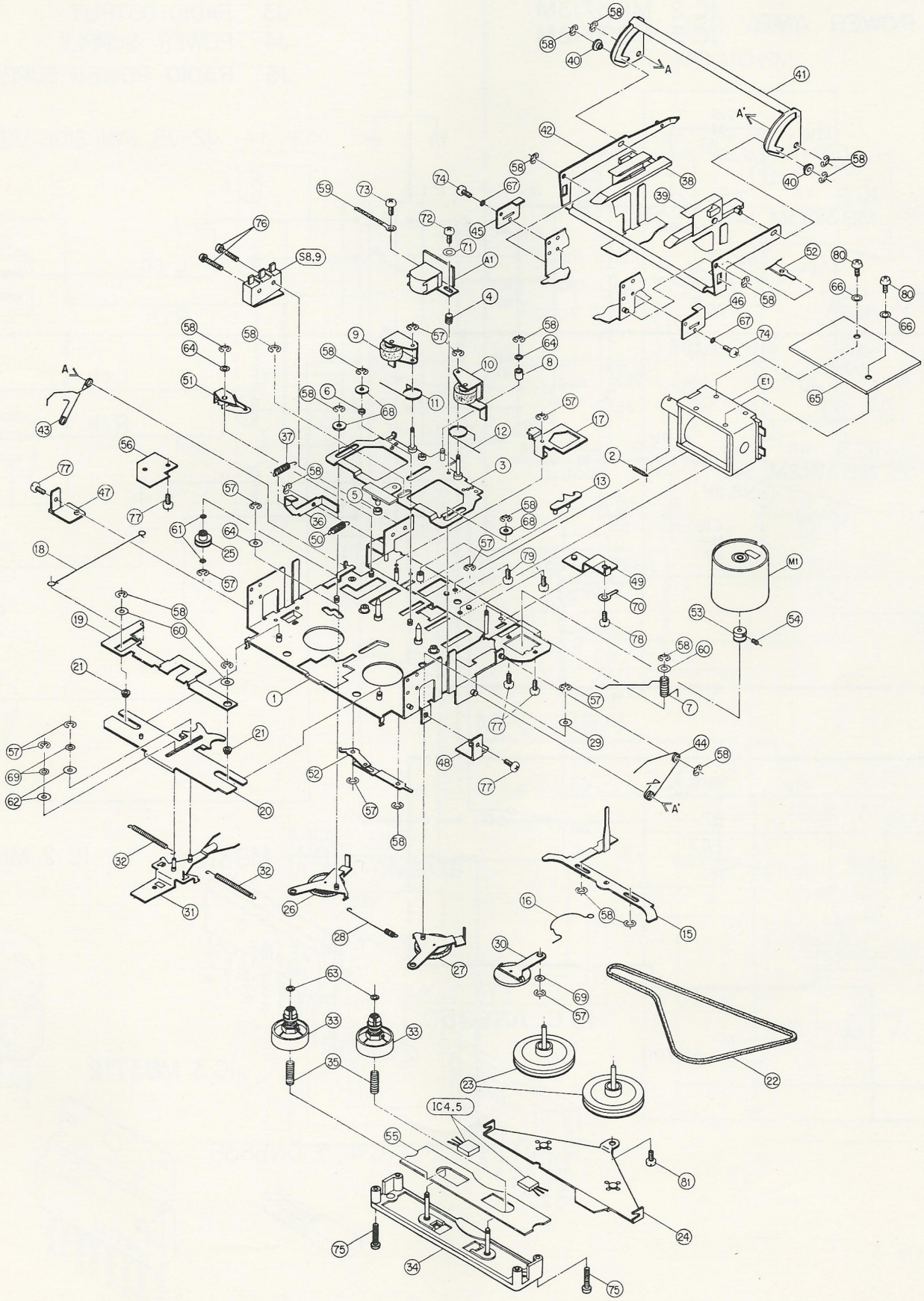

Fig. 9

EXPLODED VIEW

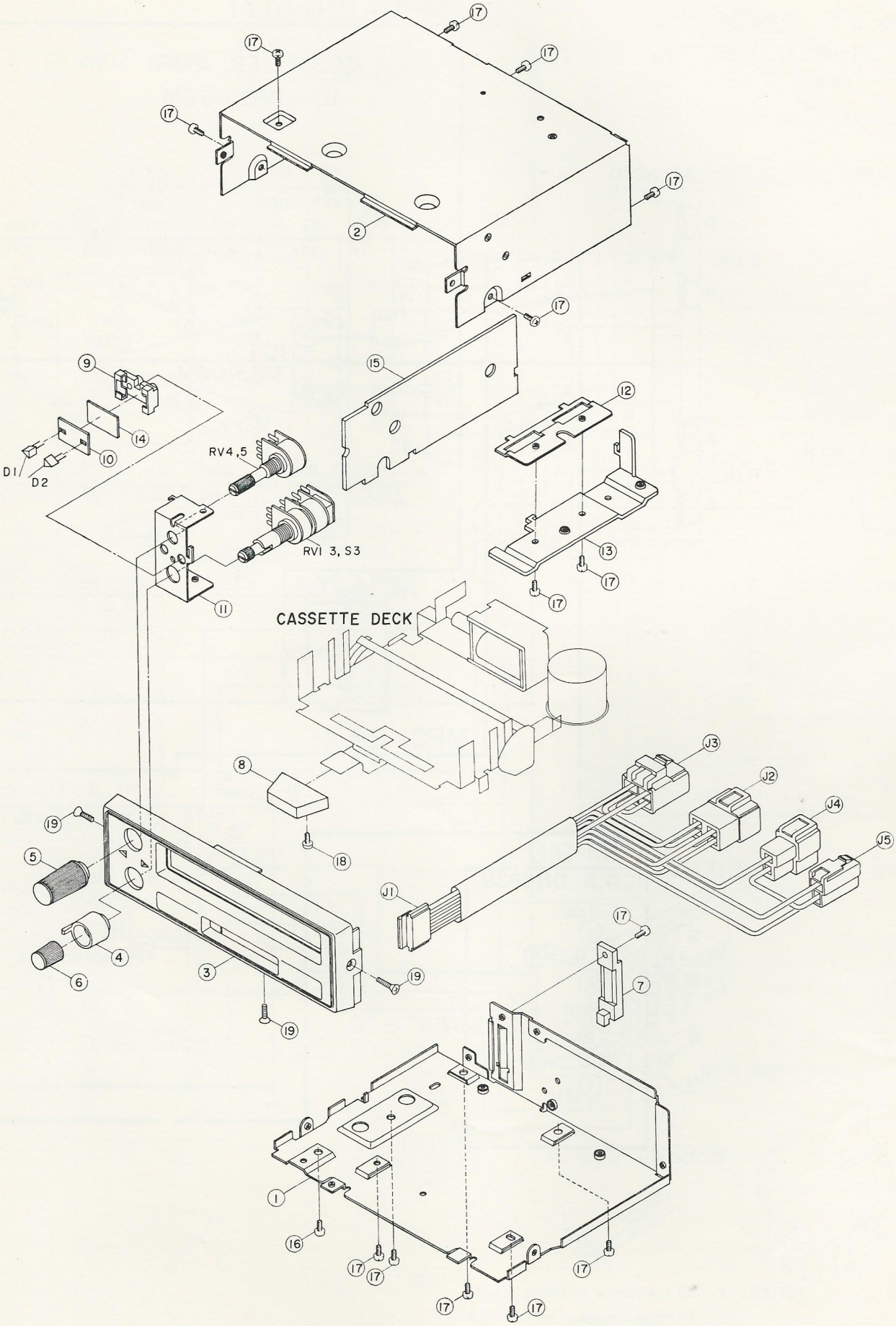

Fig. 8

PLAYBACK HEAD ADJUSTMENT (Azimuth)

Normally, the adjustment is precisely set at the factory and further adjustment should not be required unless the playback head or its mounting components are replaced.

Incorrect adjustment will cause a reduction in performance.

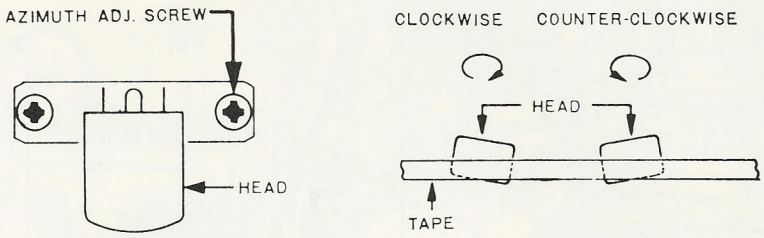

Fig. 14.

If the azimuth is moved, then carefully adjust the azimuth screw as shown in Fig. 14.

Using a Test Tape for Azimuth Adjustment

Insert a test tape and set the control knobs as follows:

VOLUME CONTROL KNOB (VOL)	Normal Volume
BALANCE CONTROL KNOB (BAL)	In Centre Position
TONE CONTROL KNOB (TONE)	Turn Fully Clockwise

Carefully adjust the azimuth adjustment screw for maximum volume and treble tones. It is recommended that a VTVM or Circuit Tester is connected to the speaker terminals for obtaining the maximum value because the test tape for azimuth adjustment is recorded in high treble tones.

If a test tape is not available, use a stereo music tape with some high treble tones (piano or violin music) and follow the same procedure as above.

CLEANING

After extended use, a layer of iron-oxide from the tape can build-up on the tape playback head and the drive capstan. The oxide layer prevents the tape from making full contact with the playback head, resulting in a gradual loss of high frequency response and an increased noise level. In the case of the capstan, the oxide deposit can cause slippage (wow) which might be mistaken for a more serious mechanical problem. To clean the head, a swab moistened with alcohol should be used.

WARNING – Do not use a solvent such as lighter fluid or thinners as these may cause damage to plastic parts or instrument finish.

First, using the end of a pencil, press the rod in the cassette door back until it clicks into position and then thoroughly clean the playback head, capstan and pinchroller.

After cleaning, press the eject button to return the rod to its original position.

DEMAGNETISATION

The playback head may become magnetised over a period of time. A magnetised head will record noise on a tape, even when it is being used for playback, so it is important that the head be periodically demagnetised. This can be done with a commercial demagnetiser (or degausser).

ADJUSTMENT FOR TAKE-UP TORQUE

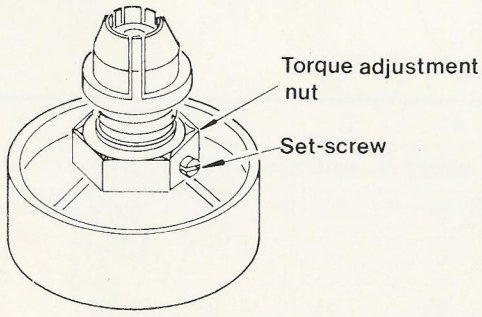

ADJUSTMENT FOR TAKE UP TORQUE

With the motor running, use an appropriate gauge to measure the take up torque. This should be between 45 and 55 g-cm. If adjustment is required, loosen the set screw in the torque adjustment nut (Fig. 15) and turn the nut clockwise to increase the torque or anti-clockwise to decrease it. Tighten the set screw.

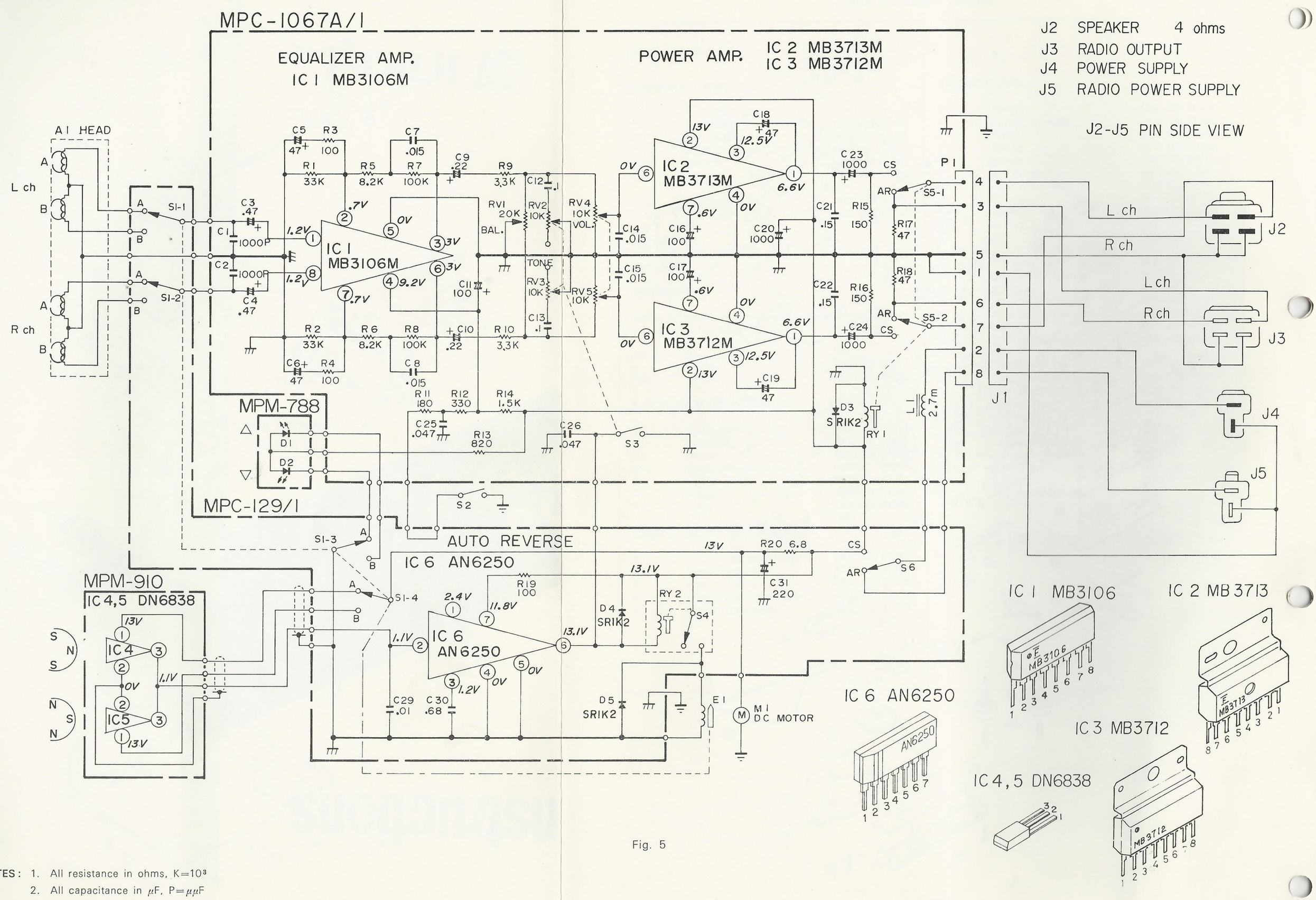

Fig. 5

NOTES: 1. All resistance in ohms, K=10^3
2. All capacitance in μF, P=$\mu\mu$F
3. DC voltages against the chassis measured with 100k ohm/volt meter, power supply set at +13.2 VDC, no signal input.

WIRING ON PC BOARD

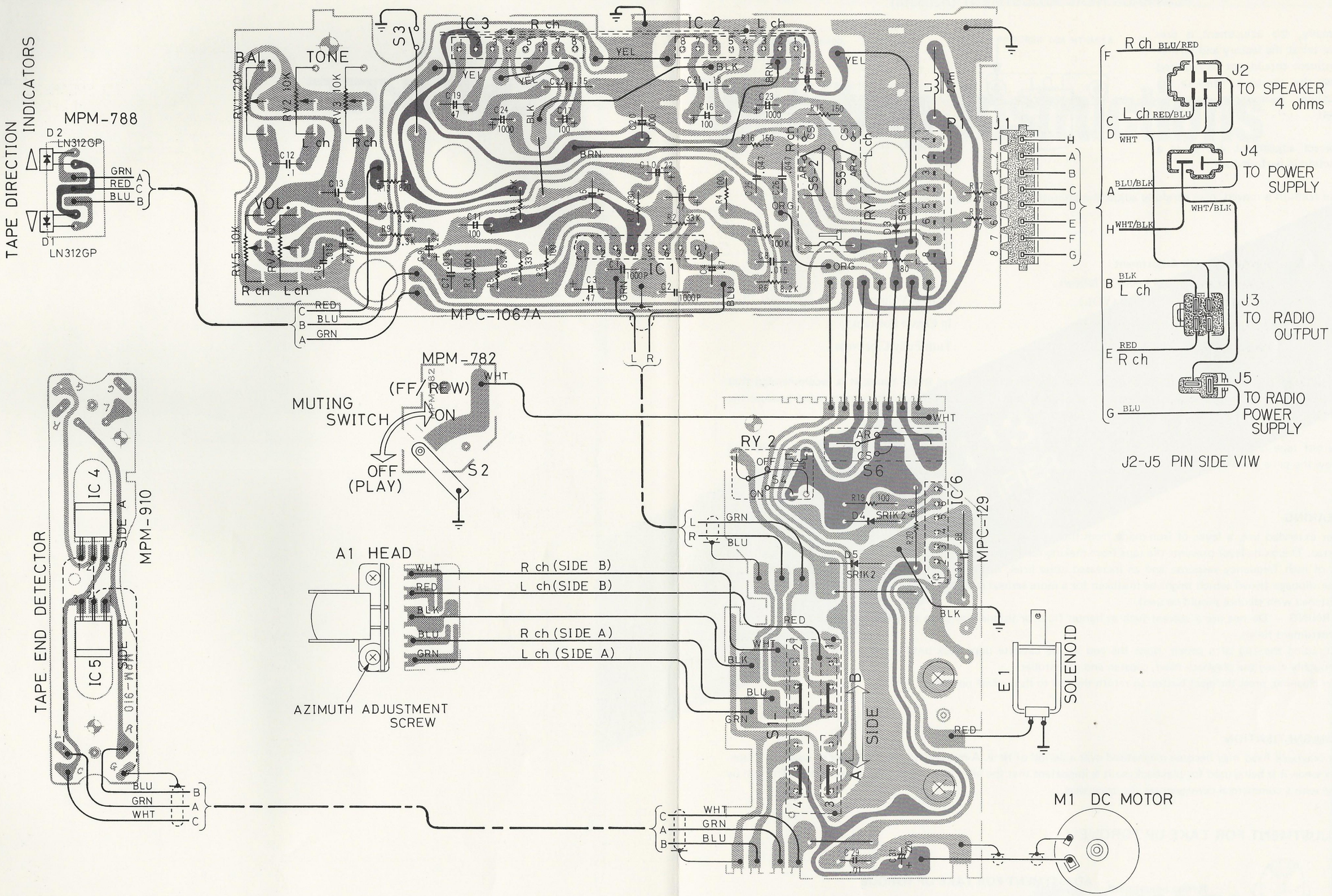

Fig. 6

IC \ Pin No.	1	2	3	4	5	6	7	8
IC 1	1.2V	0.7V	3V	9.2V	0V	3V	0.7V	1.2V
IC 2, 3	6.6V	13V	12.5V	0V	—	0V	0.6V	—
IC 4, 5	13V	0V	0~1.2V					
IC 6	2.4V	0~1.2V	1.2V	0V	0V	13.1V	11.8V	

NOTES: 1. On PC board (MPM-910), points shown by dashed line are reverse-side wiring.
2. All connectores are shown to pin-side view.