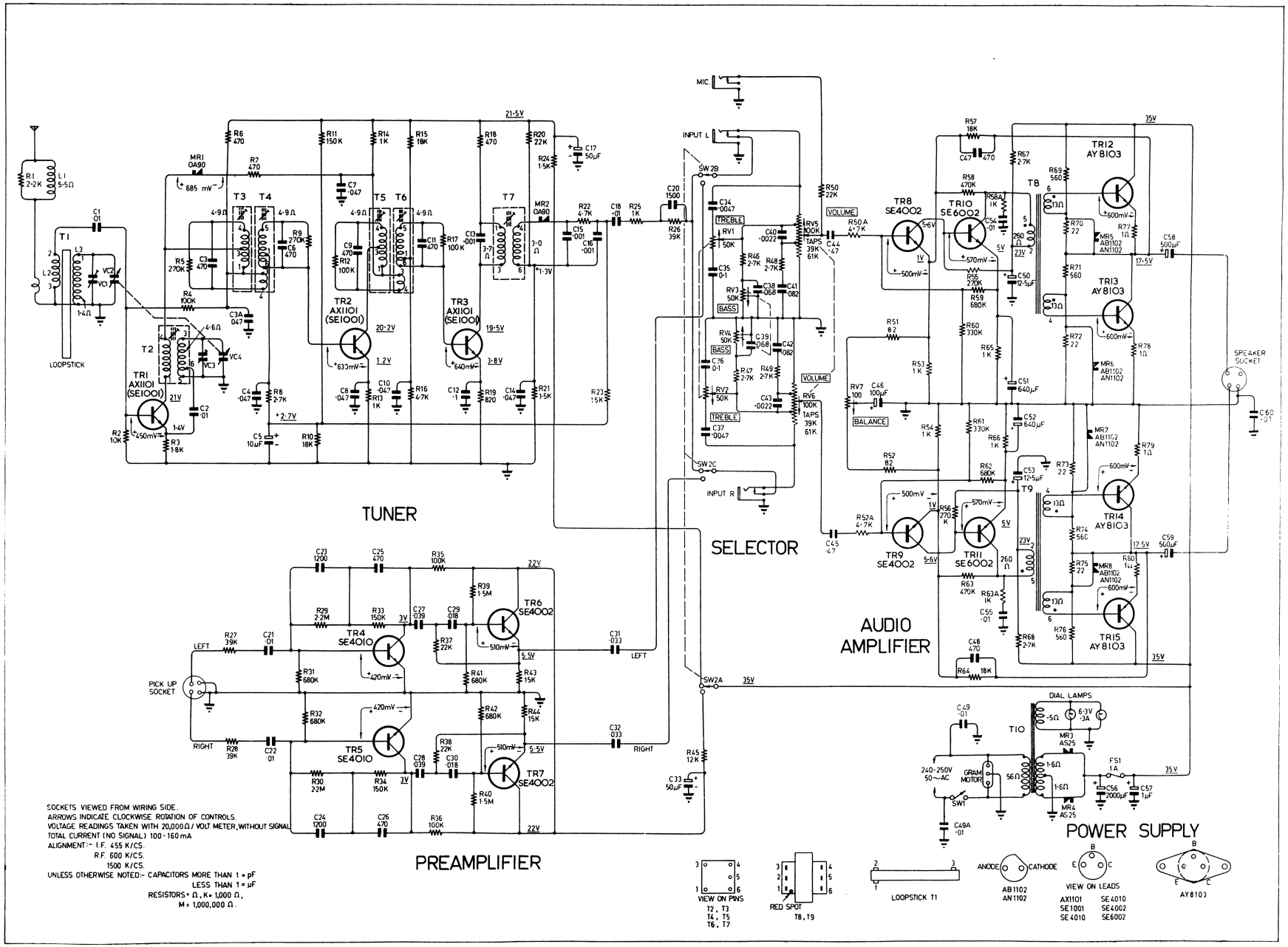

MODIFIED CIRCUIT DIAGRAM (FOR CHASSIS AFTER SERIAL NO. 1400, APPROX.)