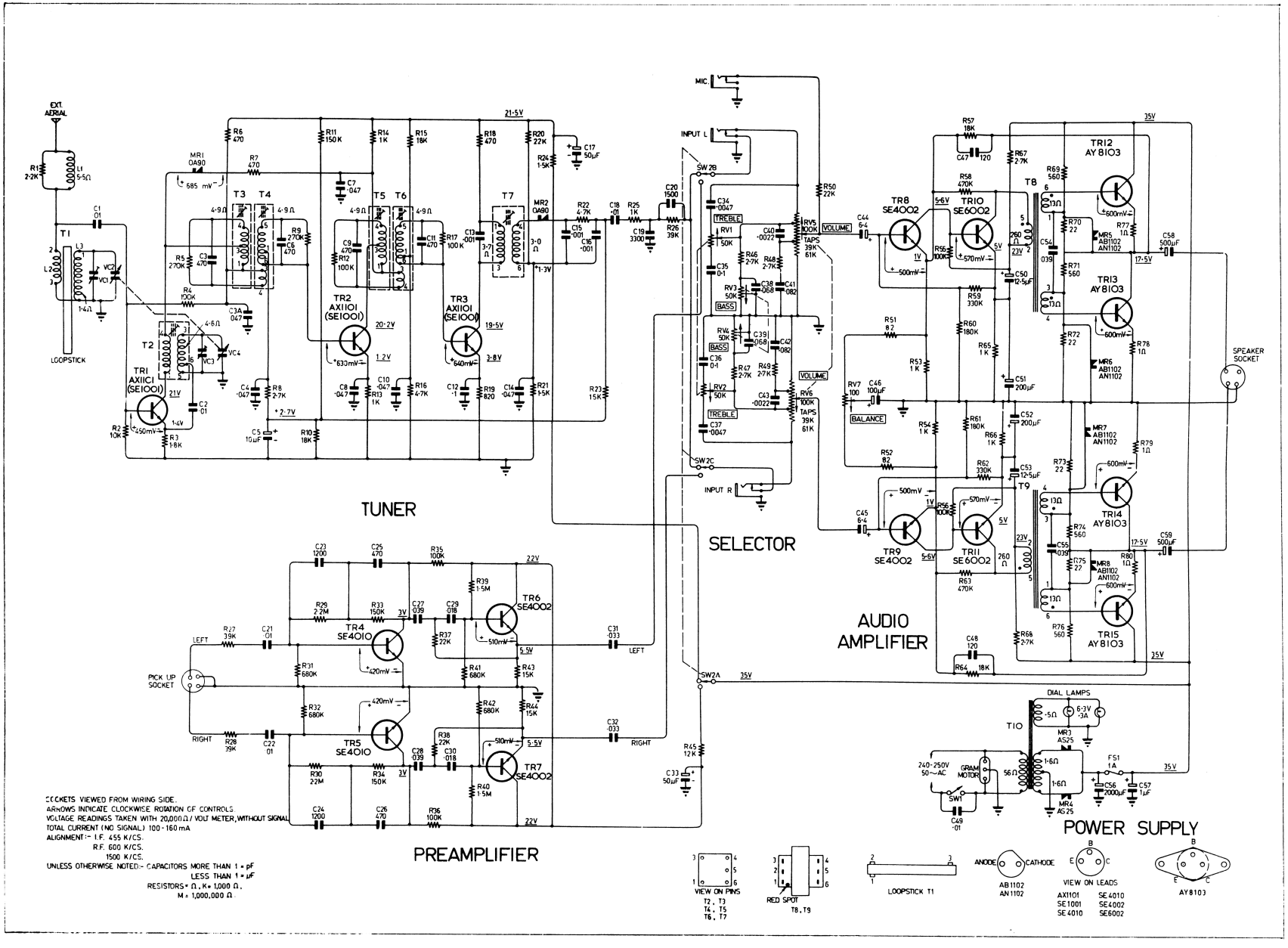

SOCKETS VIEWED FROM WIRING SIDE.
ARROWS INDICATE CLOCKWISE ROTATION OF CONTROLS.
VOLTAGE READINGS TAKEN WITH 20,000 Ω / VOLT METER, WITHOUT SIGNAL
TOTAL CURRENT (NO SIGNAL) 100 - 160 mA
ALIGNMENT:- I.F. 455 K/CS.
R.F. 600 K/CS.
1500 K/CS.
UNLESS OTHERWISE NOTED:- CAPACITORS MORE THAN 1 = pF
LESS THAN 1 = µF
RESISTORS = Ω, K = 1,000 Ω,
M = 1,000,000 Ω.

ORIGINAL CRICUIT DIAGRAM (FOR CHASSIS PRIOR TO SERIAL NO. 1400 APPROX.).