DISMANTLING—Model T3-46

Remove the power plug from the mains supply socket. Raise the lid of the cabinet. Unscrew the two chassis fixing screws which are located underneath the cabinet. The chassis can now be lifted out and freed by removing the aerial, pickup, power and speaker cables.

ALIGNMENT PROCEDURE

In any case where a component replacement has been made in either IF or RF circuits of the receiver, all circuits should be re-aligned. IF alignment should always precede RF alignment. An output meter, having a resistance of at least 250 ohms, is connected across the voice coil of one of the speakers.

In carrying out the following operations, it is important that the input to the receiver from the signal generator be kept low and progressively reduced as the circuits are brought into line, in order that overloading shall be avoided.

Note:

(a) The tuning tool should be a small plastic screwdriver with a tip which fits cleanly into the tuning core.

(b) When tuning the core, do not use any downward pressure, as the threaded former has enough resilience to detune the circuit, after the pressure is released.

IF ALIGNMENT

(1) Set the signal generator to 455 Kc/s, with 30% modulation at 400 c/s. Turn the receiver volume control to maximum and set the tuning control to the LF end of the band.

(2) Detune the five cores of the IF transformers by screwing them well out.

(3) Inject the signal from the generator, via a 0.1 uF capacitor, into the base of TR3. Adjust the core of T7 for maximum reading on the output meter.

(4) Inject the signal into the base of TR2. Adjust the cores of T5 and T6 for maximum reading on the output meter.
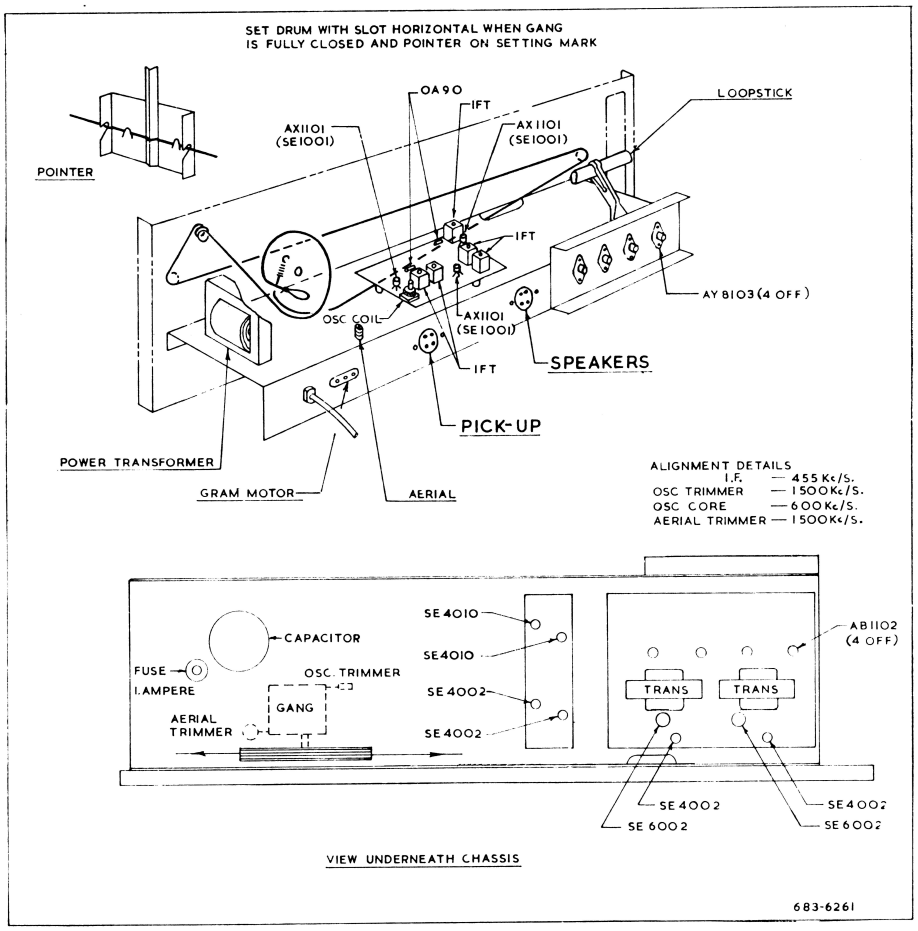
(5) Inject the signal into the base of TR1. Adjust the cores of T3 and T4 for maximum reading on the output meter.