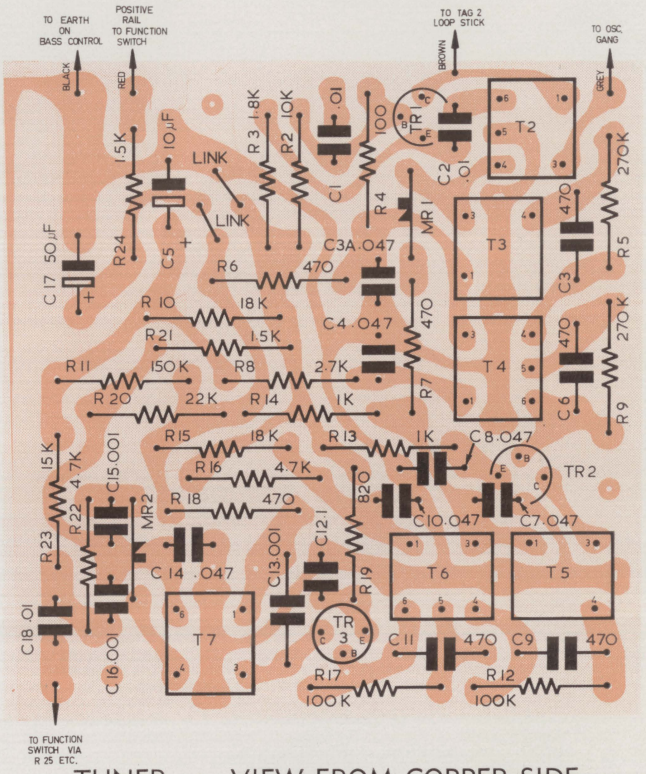

TUNER — VIEW FROM COPPER SIDE.

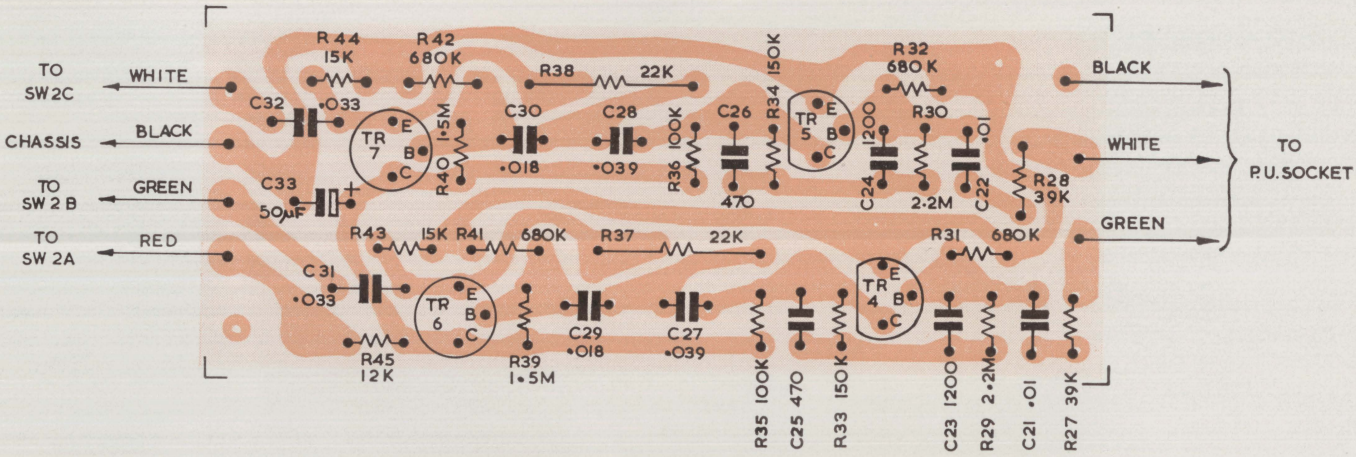

PRE-AMPLIFIER—VIEW FROM COPPER SIDE