MODEL T-51

TR1	TR2	TR3	D1	TR4	TR5 & TR6
2SA102	2SA102	2SA102	OA70	2SB171	2SB176
Con V.	1st IF Amp.	2nd IF Amp.	Det. & A.G.C.	AF Amp.	Output

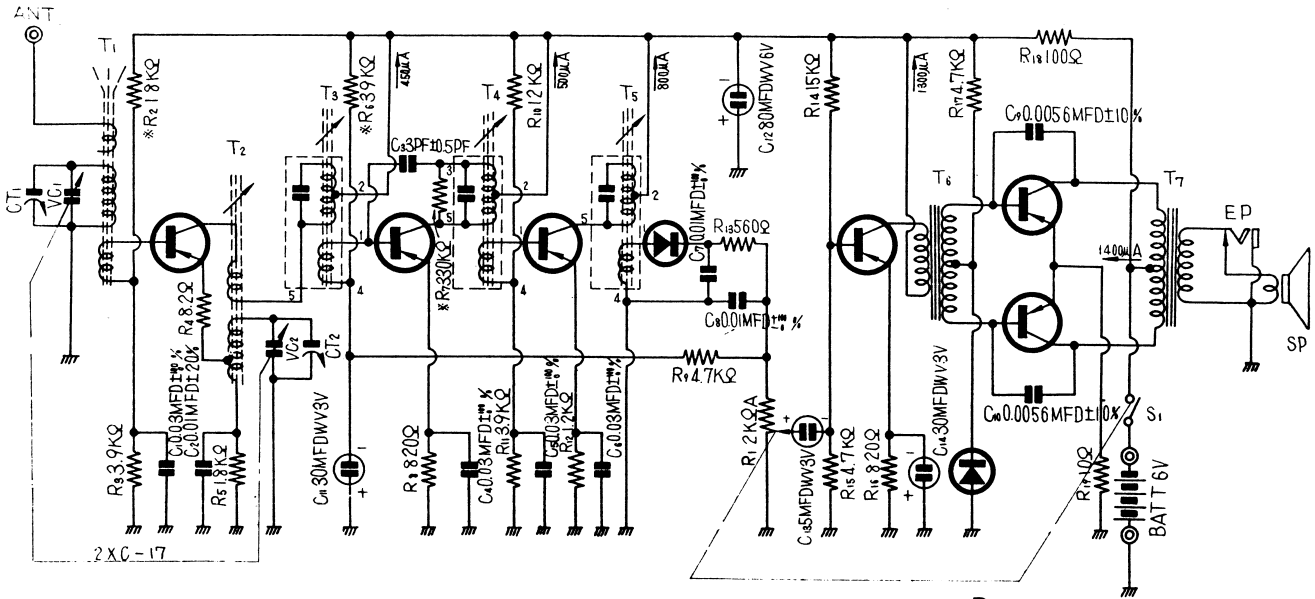

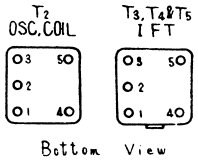

D2
MA23
A.O.C.

Notes:

1. Power switch now at "OFF" position.
2. Voltages indecated are standard values measured at no signal. They may be slightly variable on each set.
3. ※ mark (R_2, R_4, R_7) resistors are the standard values. They may be slightly on each set.
   R_2 15KΩ 18KΩ 22KΩ R_4 33KΩ 39KΩ 47KΩ R_7 330KΩ 150KΩ 82KΩ or not
4. Voltages indicated in the schematic diagram are the actual values measured with 10KΩ/V circuit tester.

• Ib at no signal 7.0mA
  at maximum output 70.0mA

NATIONAL T-51

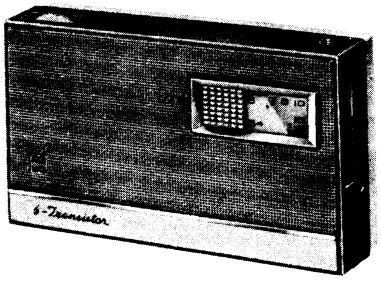

SPECIFICATIONS

Frequency Range :	540 ~ 1600 Kc/s (556 ~ 187.5 m)
Intermediate Frequency :	455 Kc/s
Sensitivity :	MW 200 μV / m / 5 mW
Power Output :	120mW undistorted 200mW maximum
Batteries :	6V (Four No. 3 penlight dry cells, 1.5V) (NATIONAL UM-3 or equivalents)
Speaker :	6.5cm (2½″) PM dynamic speaker Voice coil impedance, 8Ω

PRINTED CIRCUIT BOARD

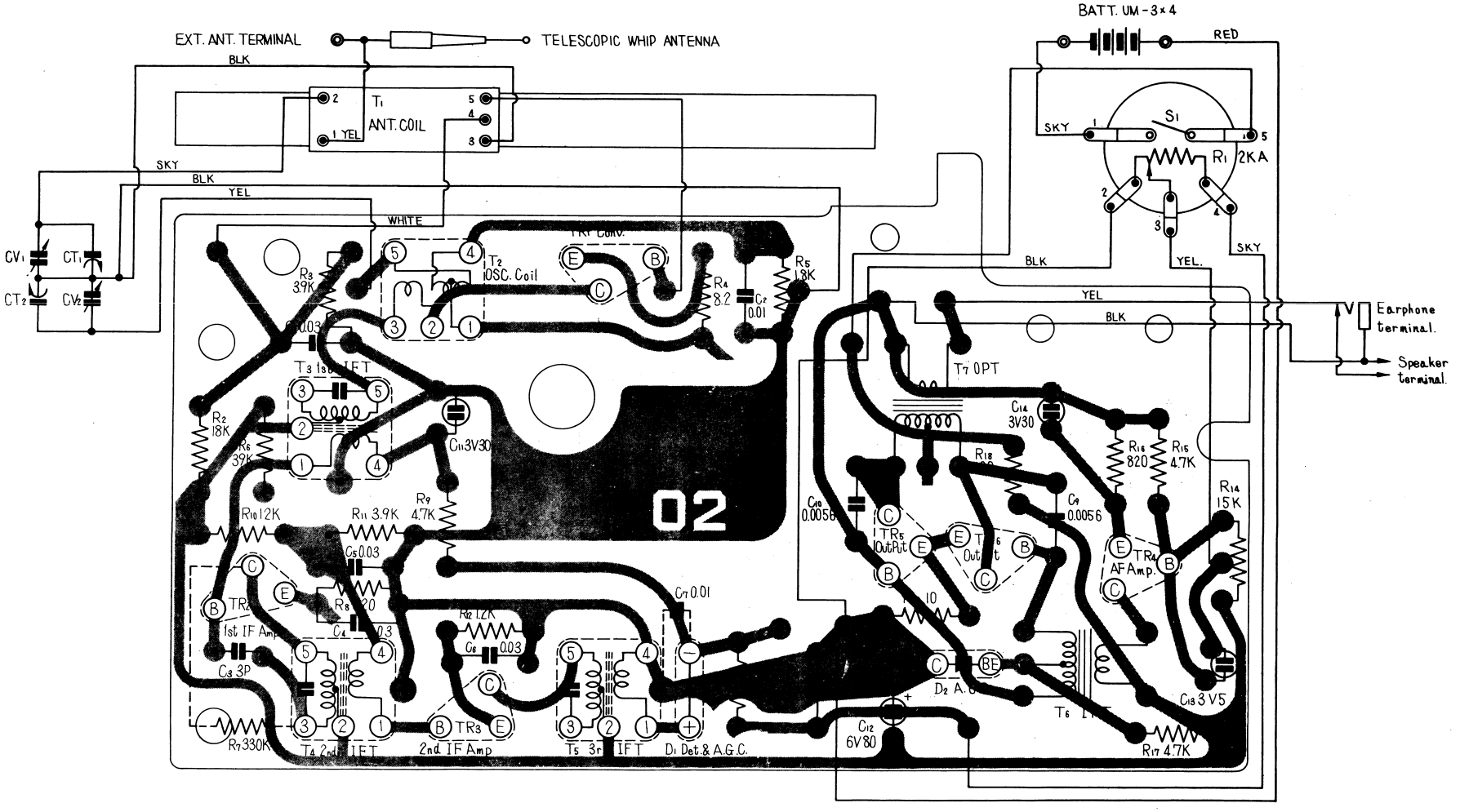

NATIONAL T-51

PRINTED CIRCUIT BOARD

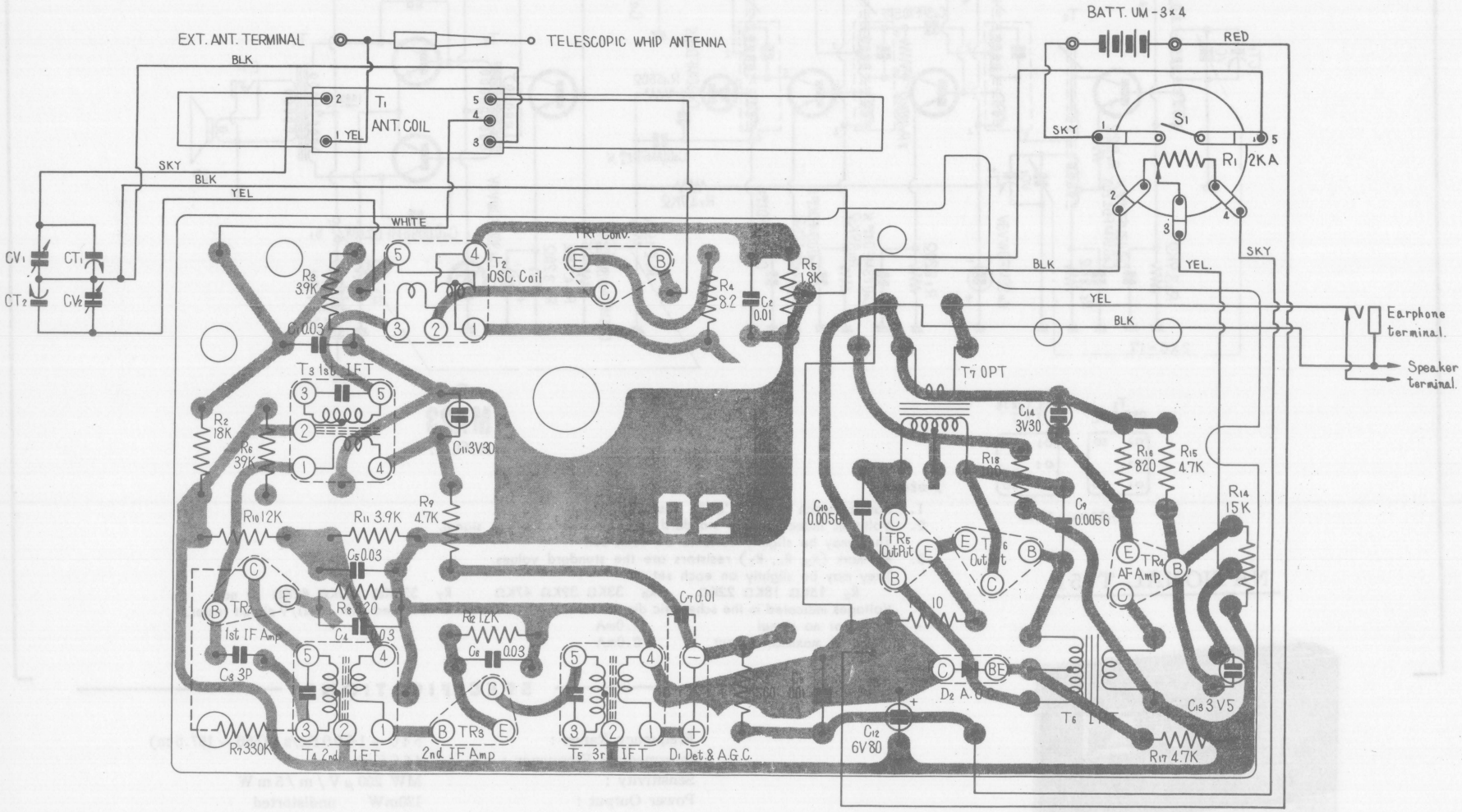

NATIONAL T-51