NATIONAL MODEL T44

TR₁	D₁	TR₂	TR₃	D₂	TR₄	TR₅	TR₆ & TR₇
2SA103	0A70	2SA101	2SA101	0A70	2SB173	2SB175	2SB172×2
Conv.	OSC.Comp.	1st I.F.Amp.	2nd I.F.Amp.	Det & A.G.C.	1st A.F.Amp.	2nd A.F.Amp.	Output

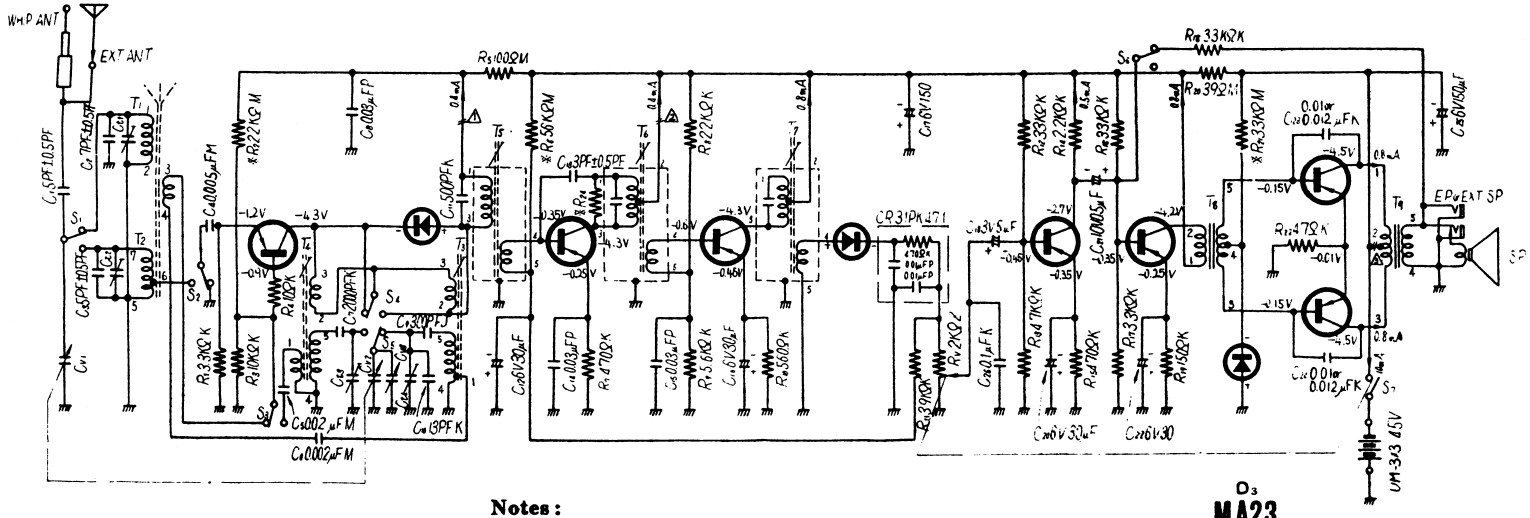

D₃
MA23
A.O.C.

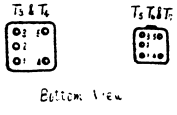

Notes:

1. $S_1 \sim S_4$: Radio band selection switch is now at "MW" position.
2. S_7: Power switch is now at "OFF" position.
3. Voltages and current indicated are the standard values measured at no signal. They may vary in each radio.
4. Voltages indicated in the schematic diagram are the actual values measured with 10KΩ/V circuit tester.
5. Values of resistor given in the schematic diagram may vary according to radio receiver.

R_2	18KΩ	22KΩ	27KΩ
R_{41}	47KΩ	56KΩ	68KΩ
R_{21}	2.7KΩ	3.3KΩ	3.8KΩ

Battery current (Ib): at no signal 8 mA; at maximum output 75 mA

SPECIFICATIONS

Frequency Range :	MW 535 ~ 1600KC (566~187.5 m) SW 3.9 ~ 12 MC (76.9 ~ 30 m)
Intermediate Frequency :	455 KC
Sensitivity :	MW 100 μV / m / 5 mW SW 100 μV / m / 5 mW
Power Output :	120 mW(10%) undistorted 200 mW maximum
Speaker :	2⅜″ (6cm) PM dynamic speaker Voice coil impedance 8Ω

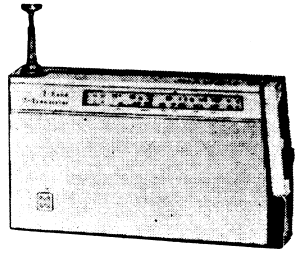

ALIGNMENT PROCEDURE

OUTPUT METER ..... Connect Output Meter across speaker voice coil terminals.

OUTPUT LEVEL ..... Attenuate Signal Generator output to maintain 0.28 volt on Output Meter to prevent overloading of the receiver.

SIGNAL GENERATOR..... Modurate Signal Generator at 1000 c/s (when IF) or 400 c/s (when MW, SW) and connect the lead wires of Signal Generator output to Radiation Loop Coil.

RADIO RECEIVER..... Place the radio 24″ (60cm) away from Radiation Loop Coil.
Set volume control to maximum.
Set power source voltage to 4.5V.

RADIATION LOOP COIL... Make up a 20 turn, 10″ (25cm) diameter bobbin, using 0.04″ (1mm) copper wire.

Circuit		Step	Signal Generator output	Dial setting	Adjusting for maximum output
I F		1	455 KC	Variable capacitor at maximum capacity	IF transformers (T_7, T_6, T_5)
		2	455 KC		Repeat step ① three times
MW	OSC	3	530 KC		MW OSC coil (T_3)
		4	1650 KC	Variable capacitor at minimum capacity	MW OSC trimmer (Ct_1)
		5	530 KC or 1650 KC	Variable capacitor at max. or min. capacity	Repeat steps ③ and ④ three times.
	ANT	6	600 KC	600 KC	MW ANT coil (T_1)
		7	1500 KC	1500 KC	MW ANT trimmer (Ct_1)
		8	600 KC or 1500 KC	600 KC or 1500 KC	Repeat steps ⑥ and ⑦ three times.
SW	OSC	9	3.8 MC	Variable capacitor at maximum capacity	SW OSC coil (T_4)
		10	12.7 MC	Variable capacitor at minimum capacity	SW OSC trimmer (Ct_3)
		11	3.8 MC or 12.7 MC	Variable capacitor at max. or min. capacity	Repeat steps ⑨ and ⑩ three times.
	ANT	12	4 MC	4 MC	SW ANT coil (T_2)
		13	12 MC	12 MC	SW ANT trimmer (Ct_2)
		14	4 MC or 12 MC	4 MC or 12 MC	Repeat steps ⑫ and ⑬ three times.

1. Adjust by an adjusting stick. Fix the coil with micro crystaline wax, and not the trimmer.
2. If you find any oscillation in the case of alignment, make a realignment of IFT, and then operate IF dump resistor R_{24} in the following values of R_{24}.

   R_{24} 100KΩ, 180KΩ, 200KΩ, 330KΩ & ∞

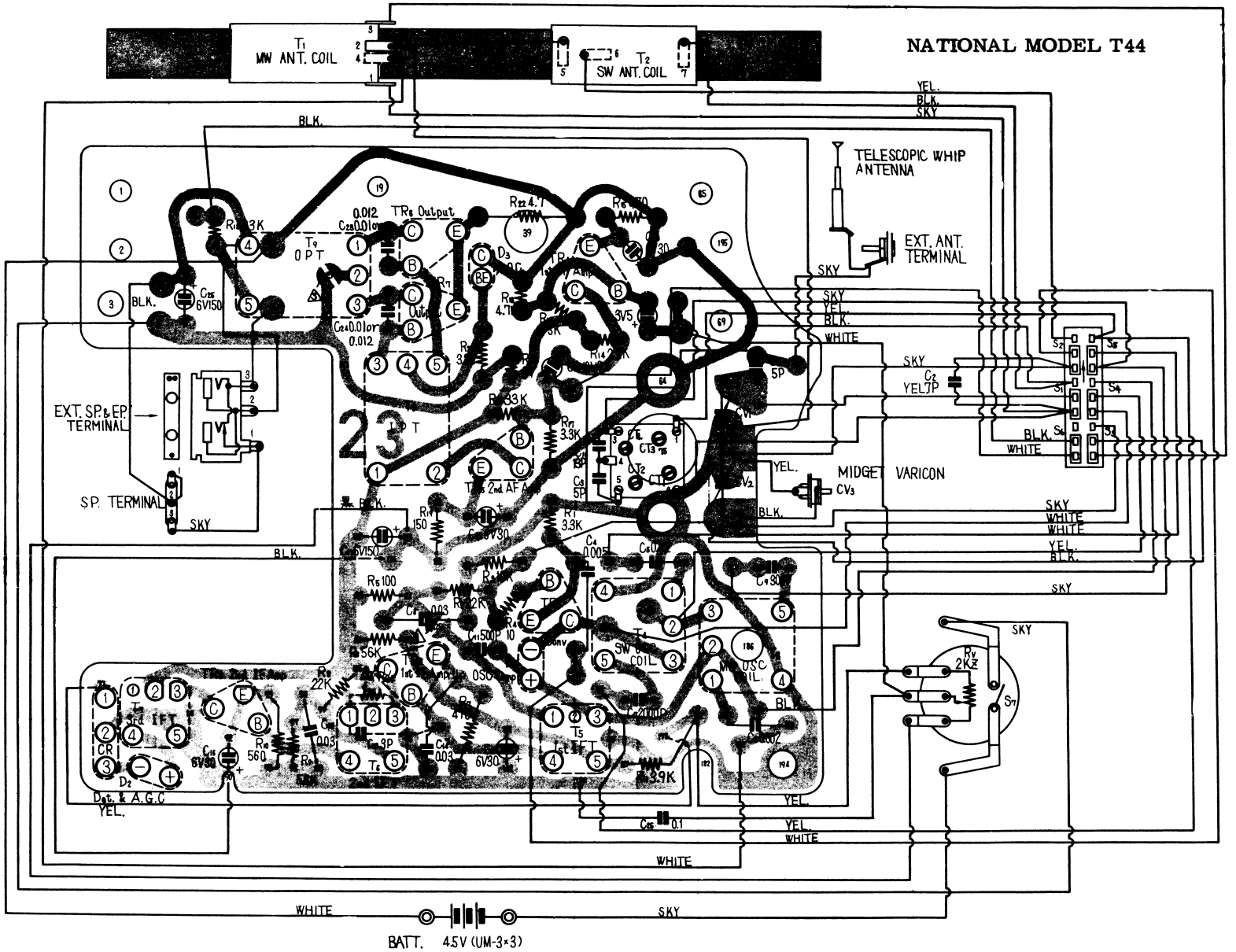
NATIONAL MODEL T44
T1
MW ANT. COIL
T2
SW ANT. COIL
TELESCOPIC WHIP ANTENNA
EXT. ANT. TERMINAL
EXT. SP. & EP. TERMINAL
SP. TERMINAL
MIDGET VARICON
CV3
Det. & A.G.C
BATT. 4.5V (UM-3×3)
BLK.
SKY
YEL.
WHITE

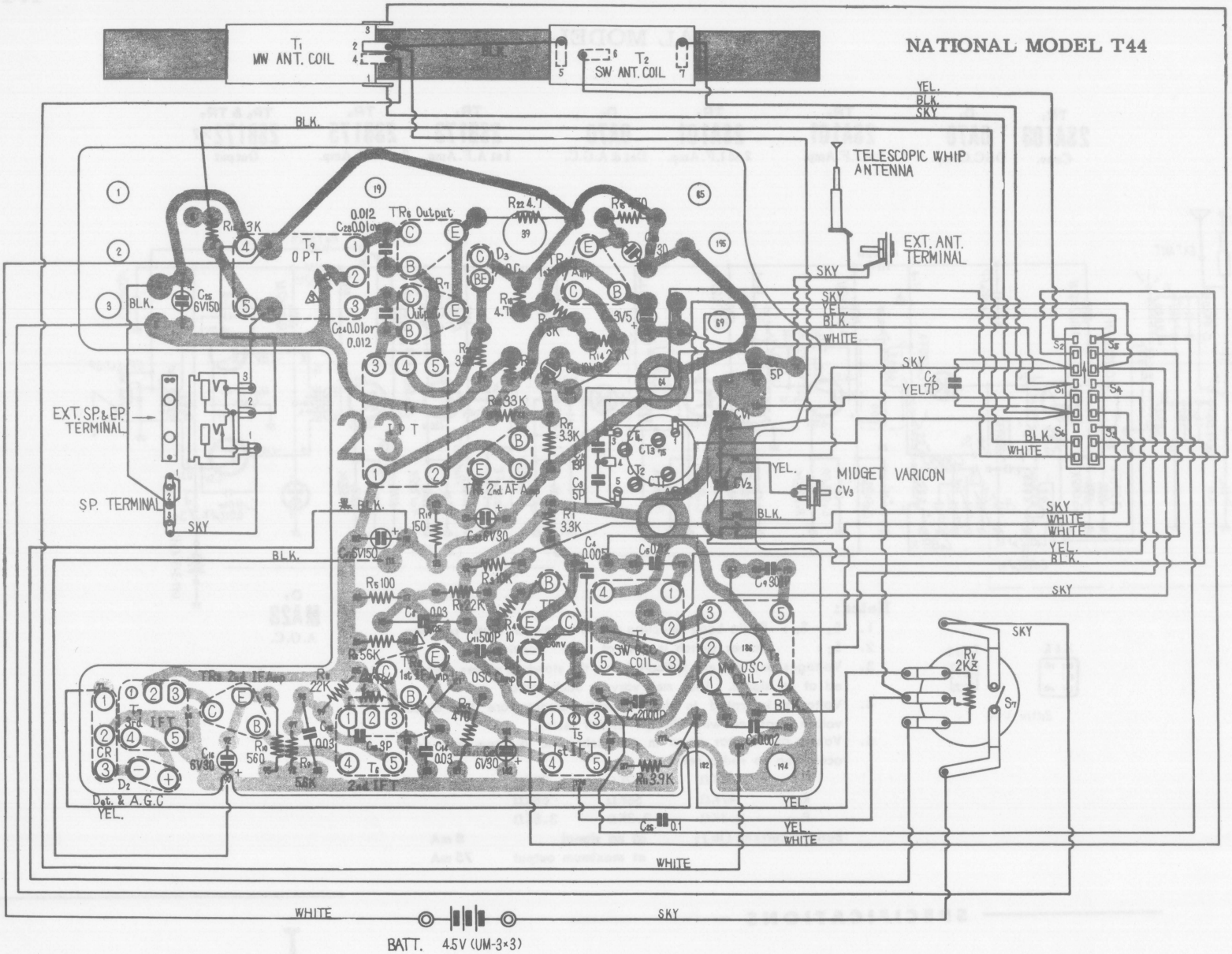
NATIONAL MODEL T44
T1
MW ANT. COIL
T2
SW ANT. COIL
TELESCOPIC WHIP ANTENNA
EXT. ANT. TERMINAL
EXT. SP. & EP. TERMINAL
SP. TERMINAL
MIDGET VARICON
CV3
TR6 Output
T9
OPT
TR5 2nd AF Amp
TR4 1st AF Amp
TR3 2nd IF Amp
TR2 1st IF Amp
OSC Amp
Conv
T4
SW OSC COIL
MW OSC COIL
T5
1st IFT
T6
2nd IFT
T7
3rd IFT
Det. & A.G.C
BATT. 4.5V (UM-3×3)
BLK.
SKY
YEL.
WHITE