# 配線図 NATIONAL RADIO MODEL T - 19

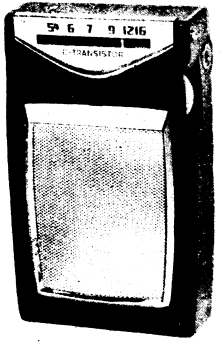

| TR—1 | TR—2 | TR—3 | D—1 | TR—4 | TR-5 & TR-6 |
|---|---|---|---|---|---|
| 2SA102 | 2SA102 | 2SA102 | 0A70 | 2SB171 | 2SB172 |
| Conv. | 1st IF Amp. | 2nd IF Amp. | Det.& A. G. C. | AF Amp. | Power Output |

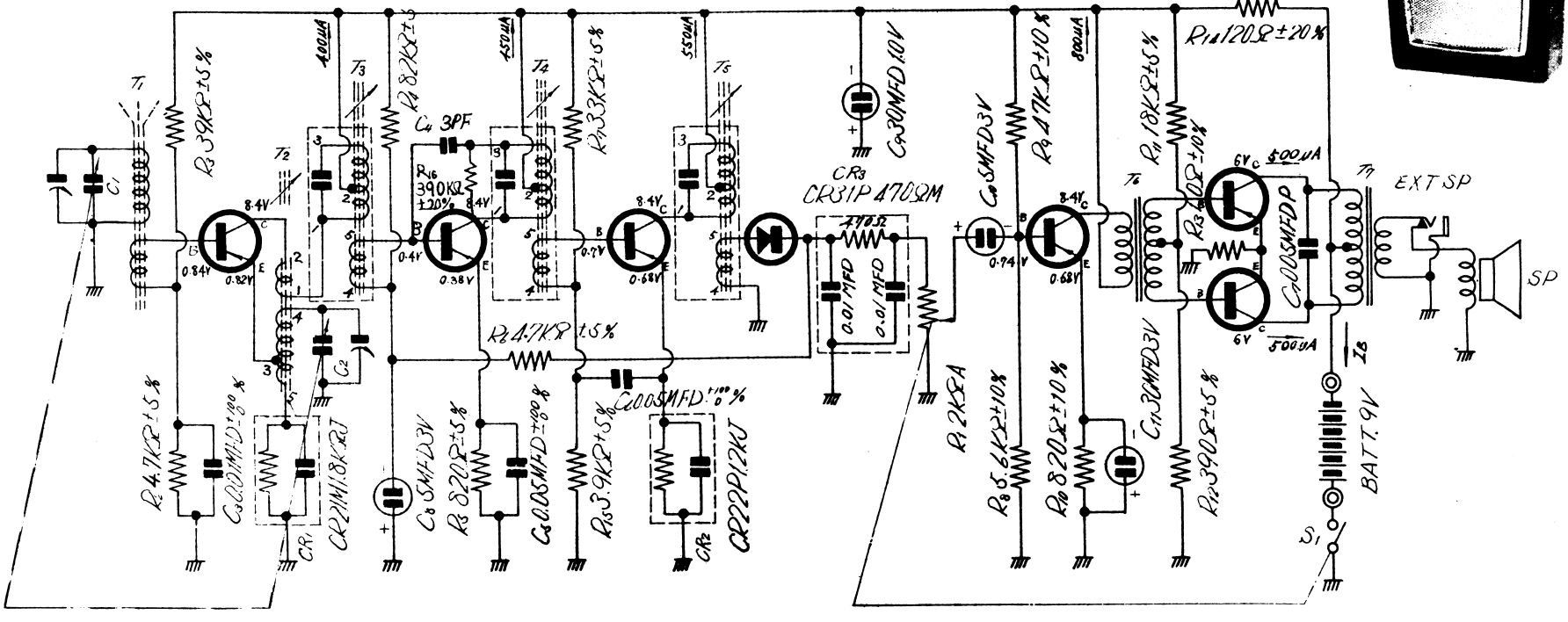

# NATIONAL RADIO MODEL T - 19

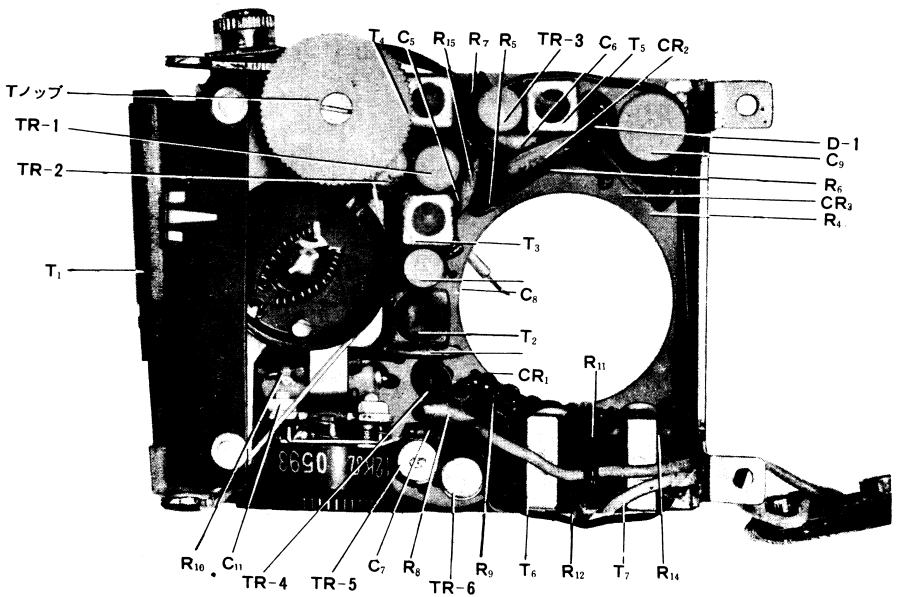


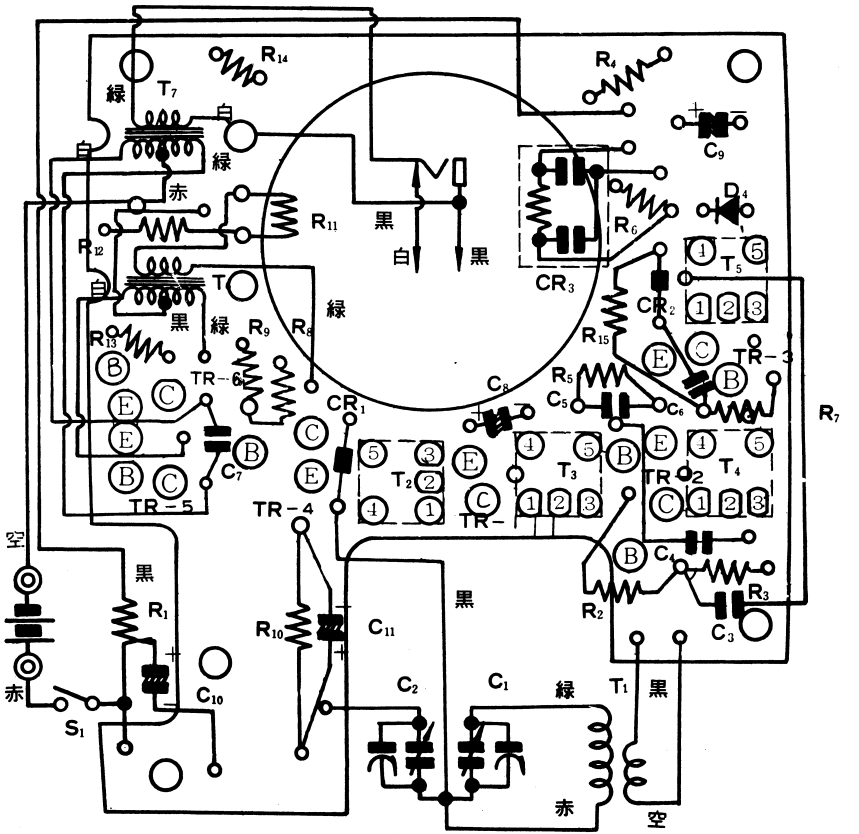

# NATIONAL MODEL T-19

## ALIGNMENT PROCEDURE

OUTPUT METER ..... Connect Output Meter across speaker voice coil.

OUTPUT LEVEL ..... Attenuate Test Oscillator output always to maintain 0.4 volt on Output Meter to prevent overloading of the receiver.

TEST OSCILLATOR ..... Modulate Test Oscillator at 1000c/s and connect the lead wires of Test Oscillator output to Radiation Loop Coil.

RADIO RECEIVER..... Place the radio receiver 20cm away from Radiation Loop Coil. Set volume control to maximum.

RADIATION LOOP COIL... Make up a 20 turn, 15cm diameter bobbin, using 1mm copper wire.

| Step | Test Oscillator output | Dial setting | Adjusting to maximum output |
|---|---|---|---|
| 1 | 455 KC | Variable capacitor at maximum capacity | I F transformers ($T_3$, $T_2$, $T_1$) |
| 2 | 455 KC | | Repeat step ①. |
| 3 | 520 KC | | Oscillator coil ($L_2$) |
| 4 | 1680 KC | Variable capacitor at minimum capacity | Oscillator trimmer ($C_2B$) |
| 5 | 520 KC or 1680 KC | Variable capacitor at max. or min. capacity | Repeat steps ③ and ④. |
| 6 | 600 KC | 600 KC | Antenna coil ($L_1$) |
| 7 | 1500 KC | 1500 KC | Antenna trimmer ($C_1B$) |
| 8 | 600 KC or 1500 KC | 600 KC or 1500 KC | Repeat steps ⑥ and ⑦. |
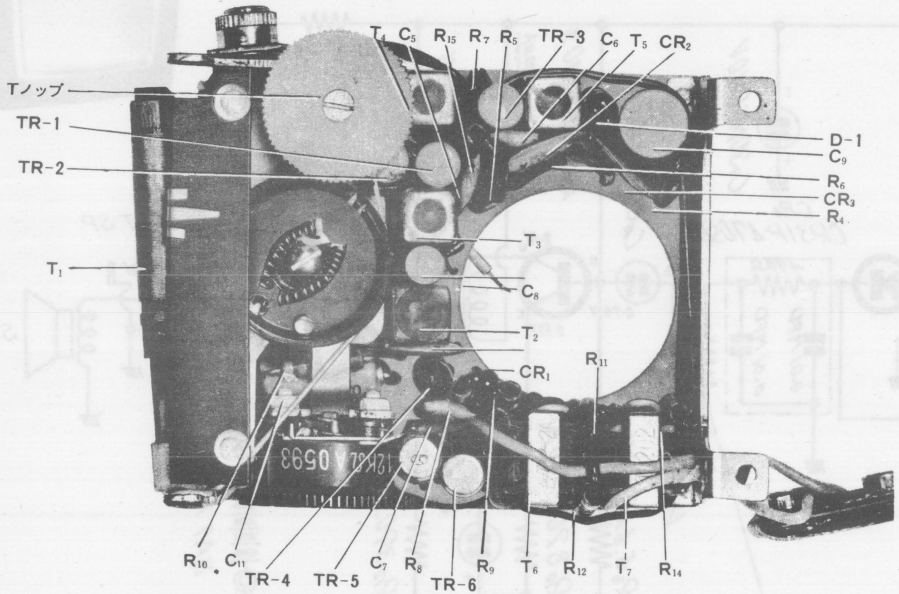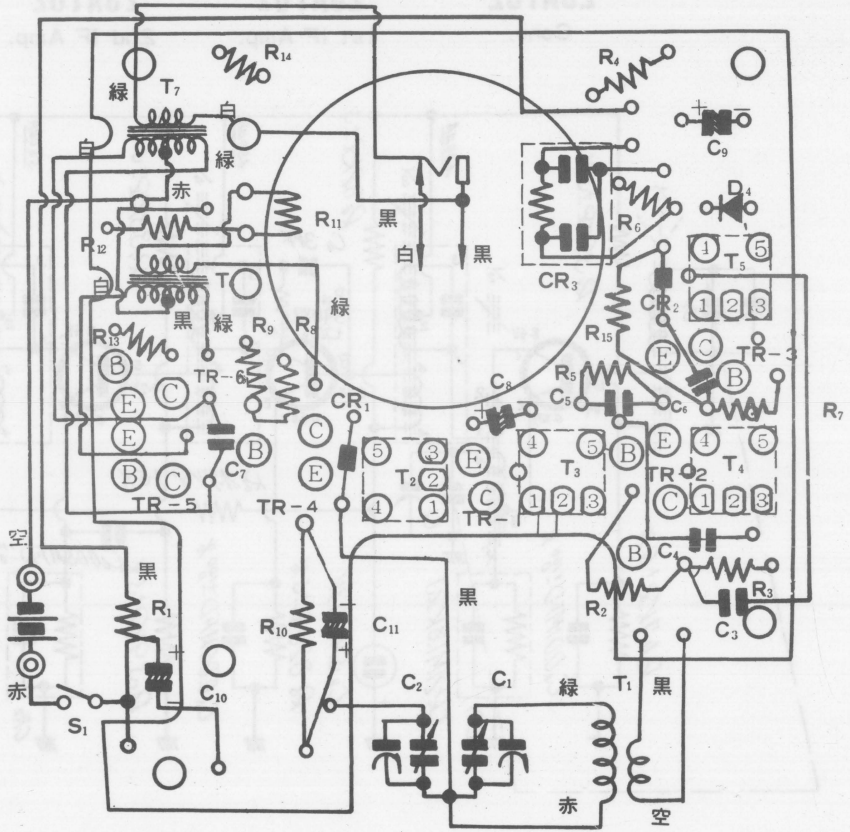
# NATIONAL RADIO MODEL T - 19