SCHEMATIC DIAGRAM

TR₂	TR₃	TR₄	D₁	TR₅	TR₆	TR₇ & TR₈
2SA103	2SA102	2SA102	OA70	2SB171	2SB171	2SB172
Mixer	1st IF Amp	2nd IF Amp	Det. & A.G.C.	1st AF Amp	2nd AF Amp	Output

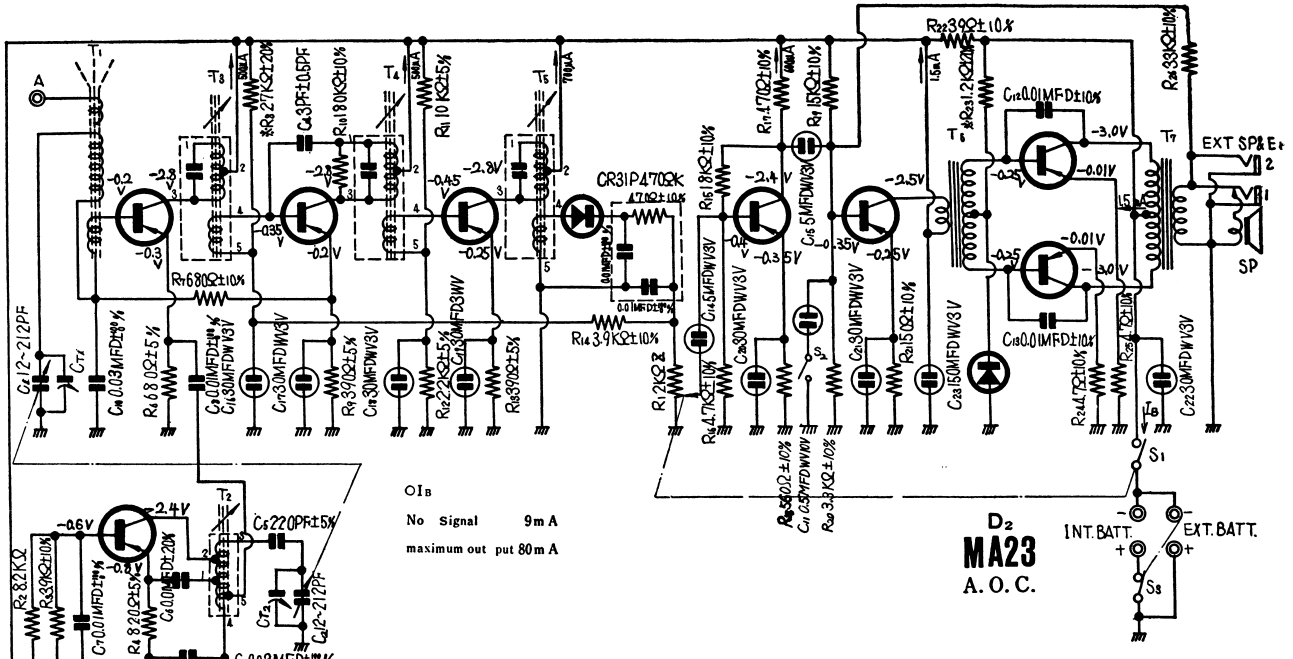

Notes:

1. S_1: Power switch now at "OFF" position.
2. S_2: Tone selection switch now at "HIGH" position.
3. Voltage indicated in the schematic diagram are the measured with 10KΩ/v circuit tester.
4. Value of resistors gives in the schematic diagram may be variable according to radio receivers.

R_8 : 22KΩ 27KΩ 33ΩK R_{10}: 120KΩ 180KΩ 270KΩ 390KΩ R_{23}: 1KΩ 1.2KΩ 1.5K

SPECIFICATIONS

Frequency Range:	MW 540~1600Kc s (556~187.5 m)
Intermediate Frequency:	455Kc/s
Sensitivity:	MW 150μV/m/5mW
Power Output:	80mW undistorted 150mW maximum
Batteries:	3V (Two No. 3 penlight cells 1.5V) (NATIONAL UM-3 or equivalents)
Speaker:	2¼" PM dynamic speaker Voice coil impedance, 8Ω

MAIN PARTS ON THE CHASSIS

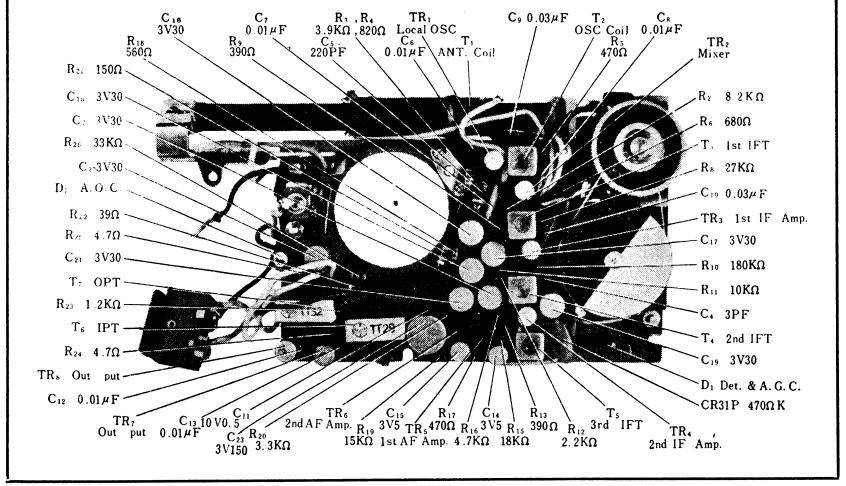

CABINET MAIN PARTS

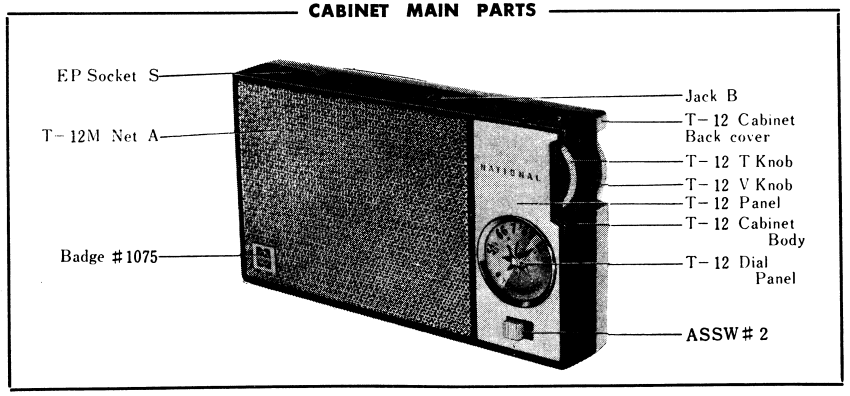

ALIGNMENT INSTRUCTIONS

OUTPUT METER ..... Connect Output Meter across speaker voice coil terminals.

OUTPUT LEVEL ..... Attenuate Signal Generator output always to maintain 0.2 volt on Output Meter to prevent over loading of the receiver.

SIGNAL GENERATOR ..... Modulate Signal Generator at 1000c/s and connect the lead wires of Signal Generator output to Radiation Loop Coil.

RADIO RECEIVER ..... Place the radio 60cm (24″) away from Radiation Loop Coil. Set volume control to maximum. Tone switch is "HIGH".

RADIATION LOOP COIL ..... Make up a 20 turn, 25cm (10″) diameter bobbin, using 1mm (0.04″) copper wire.

DIAL CORD STRINGING

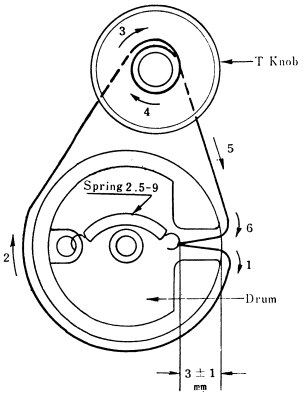

do dial rope drive mechanism

When you hang a new dial rope, please do it in the order of arrow marks (1~6), as illustrated in the above sketch, keeping the variable capacitor at maximum capacity, please fix dial rope ends and dial pointer.

Notes :

1. The length between the outside bedge of drum and the knot of the dial rope is to be 3±1mm.
2. Variable capacitor now at maximum capacity.
3. Please wind the dial rope two turns on the tuning control konb.

Adjust Circuit		Step	Signal generator output	Dial setting	Adjusting for maximum output
IF		1	455 KC	Variable capacitor at maximum capacity	IF Transformers T_5, T_4, T_3
		2	455 KC		Repeat three times steps (1).
MW	OSC	3	530 KC		MW OSC coil (T_2)
		4	1670 KC	Variable capacitor at minimum capacity	MW OSC trimmer (CT_2)
		5	530 KC or 1670 KC	Variable capacitor at max. or min. capacity	Repeat three times steps (3) and (4).
	ANT	6	600 KC	600 KC	MW ANT coil (T_1)
		7	1500 KC	1500 KC	MW ANT trimmer (CT_1)
		8	600 KC or 1500 KC	600 KC or 1500 KC	Repeat three times steps (6) and (7).

PRINTED CIRCUIT BOARD

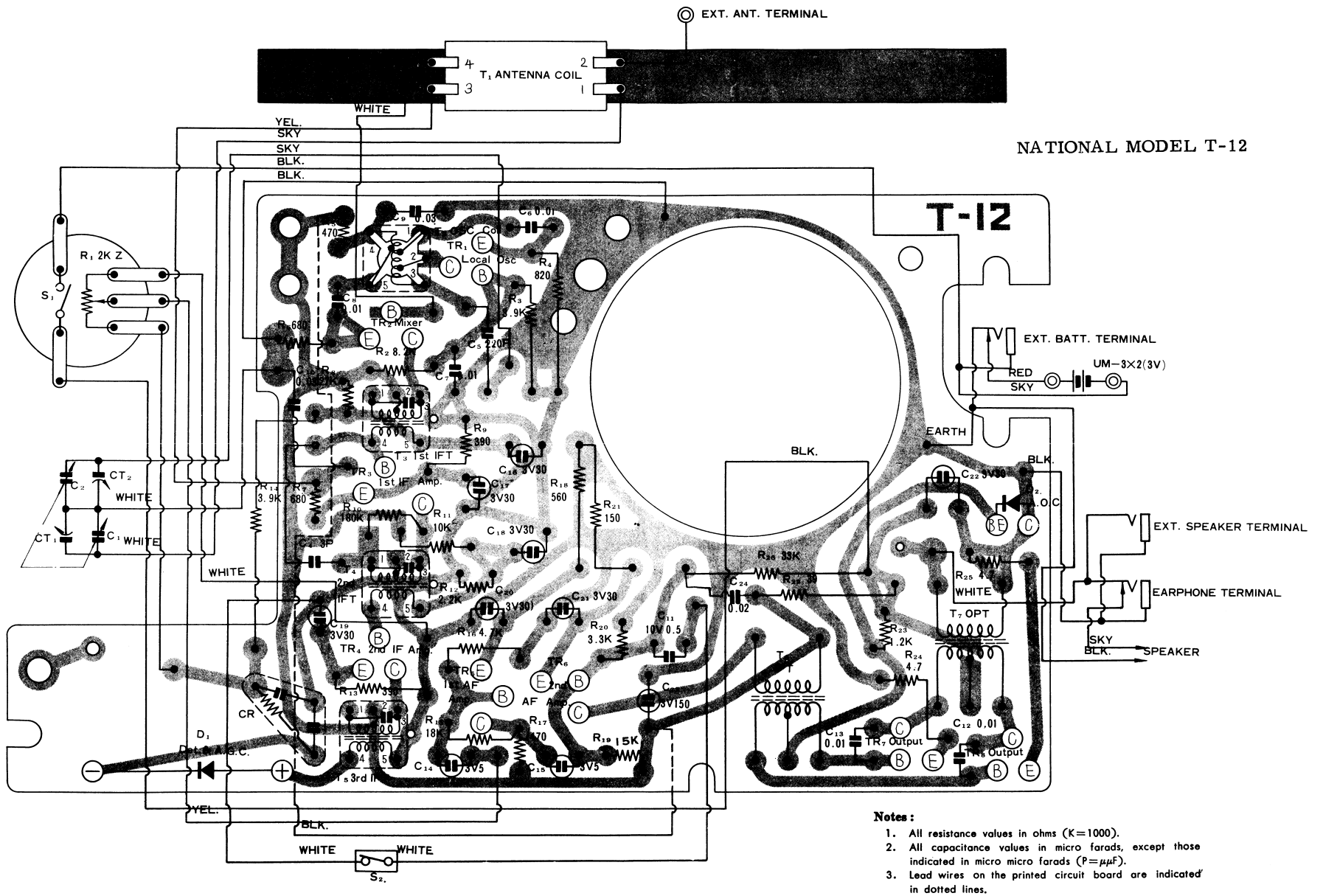

Notes:

1. All resistance values in ohms (K=1000).
2. All capacitance values in micro farads, except those indicated in micro micro farads (P=$\mu\mu$F).
3. Lead wires on the printed circuit board are indicated in dotted lines.
4. Band selection switch is now at "MW" position. Turn it to SW in the direction of arrow mark.

PRINTED CIRCUIT BOARD

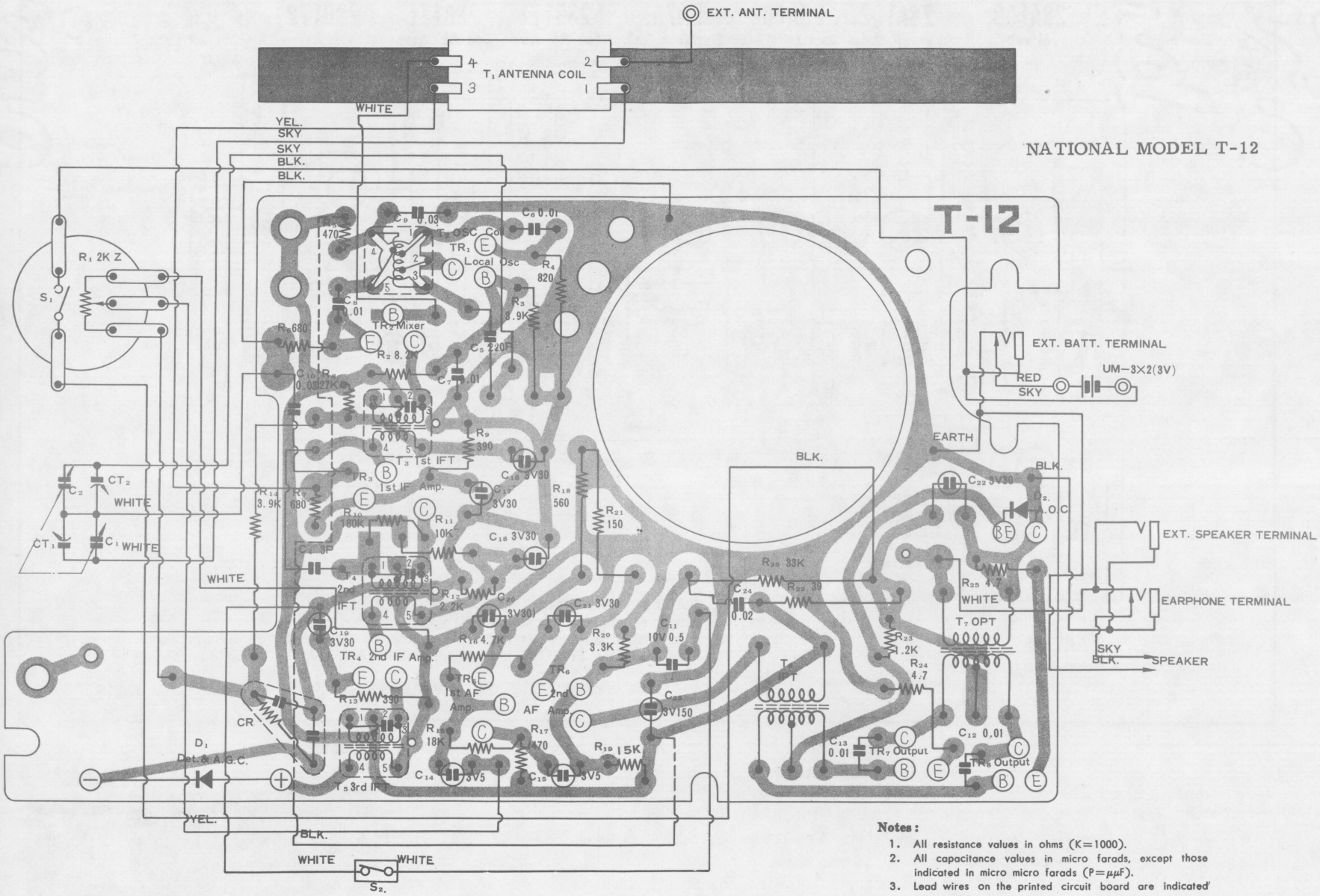

Notes:

1. All resistance values in ohms (K=1000).
2. All capacitance values in micro farads, except those indicated in micro micro farads (P=$\mu\mu$F).
3. Lead wires on the printed circuit board are indicated in dotted lines.
4. Band selection switch is now at "MW" position. Turn it to SW in the direction of arrow mark.

MAIN PARTS ON THE CHASSIS

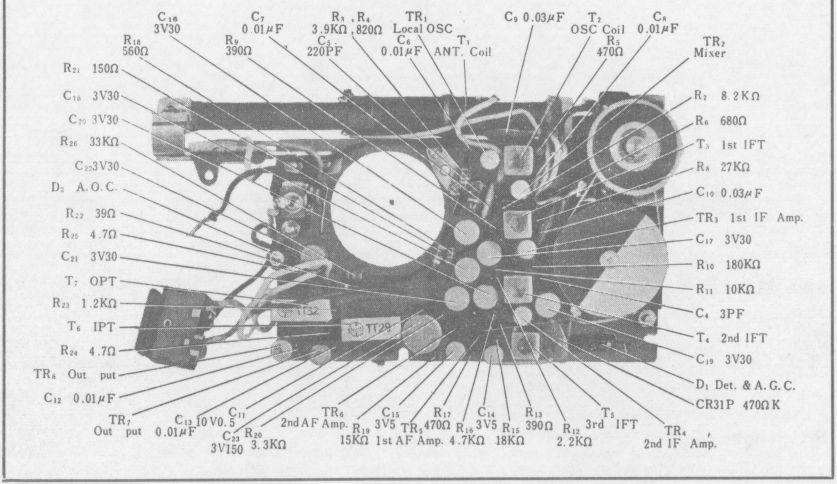

CABINET MAIN PARTS