Stromberg-Carlson

STROMBERG - CARLSON
SERVICE BULLETIN, No. 56/565

Stromberg-Carlson
Models 56/565 Superheterodyne

ALL-ELECTRIC, FOUR VALVES AND RECTIFIER

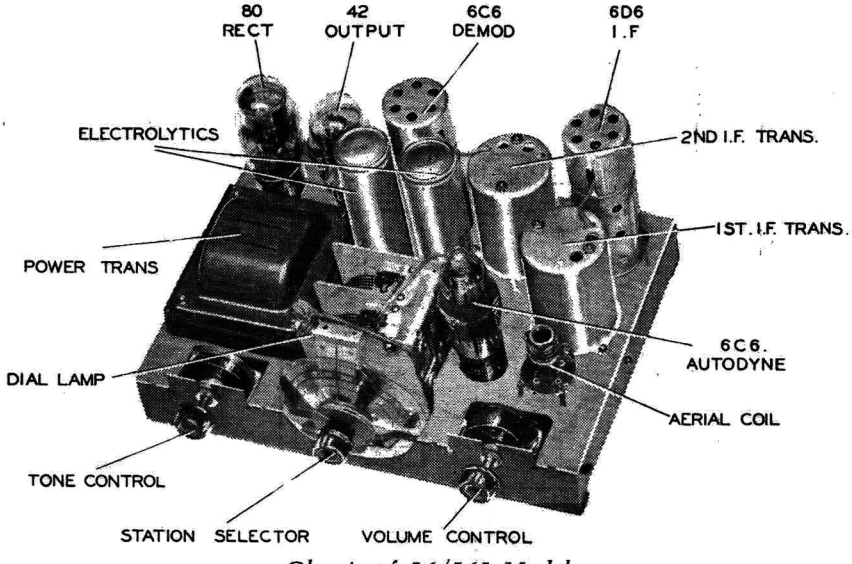

Chassis of 56/565 Model.

This Service Bulletin is issued free of charge to all authorised Stromberg-Carlson Dealers. Applications for additional copies should be made direct to the nearest Distributor.

Stromberg-Carlson (Australasia) Ltd. reserves the right to make changes in design details at any time without incurring any obligations to install same on radio receivers previously sold.

SERVICE BULLETIN, No. 56/565 *(Continued)*

Stromberg-Carlson Models 56/565 Superheterodyne

ALL-ELECTRIC, FOUR VALVES AND RECTIFIER

1. GENERAL DESCRIPTION OF RECEIVER:

This Receiver employs the improved superheterodyne circuit designed and developed in the Stromberg-Carlson laboratories.

By the use of carefully designed components and layout in the chassis it has been possible to achieve exceptional results.

The Model 56 is used in a well-designed mantel cabinet, and the Model 565 is the same chassis in a console cabinet.

2. INSTALLATION INSTRUCTIONS:

(a) Aerial.

The sensitivity of this model is such that for broadcasting reception a well-insulated wire about 20 or 30 feet in length, placed along the picture moulding in a room, or beneath the carpet, will prove satisfactory. Care should be taken to place all such indoor aerials as far away as possible from electric light or power conduits, and, in particular, clear of all unshielded flexible leads, since these latter are prolific radiators of undesirable electrical impulses.

An outdoor aerial is the most efficient, and is strongly recommended, especially for long-distance daylight reception on the broadcast band. The length of this aerial should be from 30 to 50 feet. In noisy areas (due to electrical interference) the aerial should be erected as far as possible from and at right-angles to any electric power or light mains.

As a further precaution against undesirable pick-up, the lead-in should be a special shielded type as employed in the "Stromberg-Carlson Aerial Noise Eliminator Kit." Details of this type of aerial may be had on application to Stromberg-Carlson (Australasia), Limited.

(b) Earth.

When required by the wiring rules the chassis should be connected to earth by means of an insulated wire attached to a water pipe by an approved clamp. It is preferable to connect the earth lead to the last section of the pipe where it enters the ground, thus avoiding the high resistance contacts at the joints. Should a water system not be available, an efficient earth may be obtained by driving a metal pipe or burying about four square feet of metal sheeting in moist earth; the connection to the metal should preferably be soldered.

(c) Voltage Adjustment Panel.

Before leaving the factory the voltage switch is set to the 230/260-volt setting. If the line voltage differs from this, the switch should be set to the position nearest to, but not less than the measured line voltage in the locality. The voltage tappings for 200/230, 230/260 volts are designated on the back of the chassis. The adjustment is readily carried out by means of a screwdriver on removing the danger plate.

When making any adjustment, see that the power plug is completely removed from the socket of the supply source.

SERVICE BULLETIN, No. 56/565 *(Continued)*

(d) Trimmer Adjustments.

The trimmer capacitors on the variable condenser, coil assembly, and the trimmer capacitors on the Intermediate Frequency Transformers (tuned to 460 k.c.) are adjusted and sealed at the factory at the time of calibration. These adjustments should on no account be touched or seals broken unless a specially calibrated oscillator and indicating instrument are available, whereby such adjustments can be successfully carried out.

In any repairs or adjustments, the above remarks in regard to the coil assembly and intermediate transformer should be carefully noted.

3. OPERATION.

(a) The more sensitive and selective the Receiver is the more care should be taken in its operation and tuning to obtain the best results. In Models 56 and 565 the left-hand knob is the "tone control," the centre knob is the tuning control, the right-hand knob is the volume control. Improper tuning will affect the quality of reproduction. Care should be taken to keep the volume control well down, then adjust the tuning control to the point of maximum undistorted signal, thereafter adjusting the volume to the desired level.

(b) Tone Control.

The left-hand knob is the Tone Control. For normal or "brilliant" reception turn Tone Control to right. Where the background of noise is objectionable (as sometimes occurs on long-distance reception) turn the Tone Control to the left.

For the reception of local or strong interstate stations the Tone Control should be at the "brilliant" position in order that the full range of musical frequencies and overtones may be enjoyed.

4. VALVES:

All Receivers leaving the factory are equipped with valves inserted into the sockets. If for any reason it becomes necessary to remove the valves, care should be taken to see that each one is replaced in the socket from which it was taken. The photograph of the chassis on page 1 shows the type and function of the valves and their exact location.

Function of Valve.	Type of Valve.
Autodyne	6C6
I.F.	6D6
Second Detector	6C6
Output	42
Rectifier	80

5. SPEAKER:

The speaker in this Model is the Dynamic or moving coil type and is matched to the output valve. The field coil being used at the date of issue of this Bulletin has a resistance of 1000 ohms. The speaker terminates in a four-pin plug at the Receiver chassis.

THIS PLUG SHOULD NOT BE REMOVED WHILE THE CURRENT IS TURNED ON.

SERVICE BULLETIN, No. 56/565 *(Continued)*

6. VOLTAGES:

Valve.		Plate.	Screen.	Cathode.
6C6	Autodyne	250	90	7
6D6	I.F.	250	90	Variable 3 to 35
6C6	Second Detector	—	—	—
42	Output	250	250	—

Bias for the type 42 is obtained by a resistor in the negative lead, and is 16 volts. The plate and screen of the 6C6 second detector are fed through 200,000 ohms and 500,000 ohms respectively from 250 volts and 90 volts respectively.

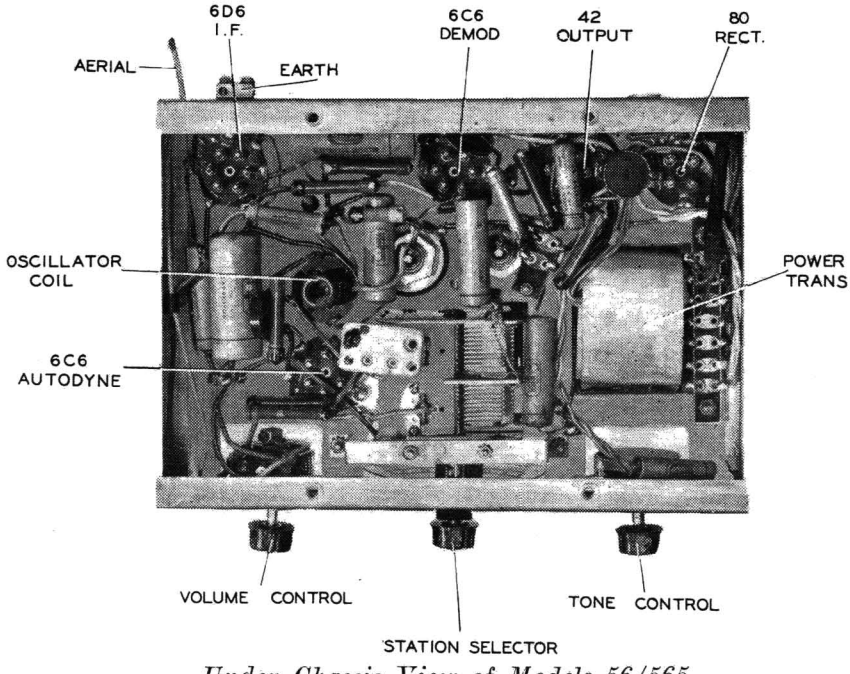

Under Chassis View of Models 56/565

N.B —BEFORE LEAVING A STROMBERG-CARLSON RADIO RECEIVER IN A CUSTOMER'S HOME, SEE THAT EVERYBODY WHO IS LIKELY TO HANDLE THE RECEIVER FULLY UNDERSTANDS ITS OPERATION. BY SO DOING MANY UNNECESSARY SERVICE CALLS WILL BE AVOIDED.

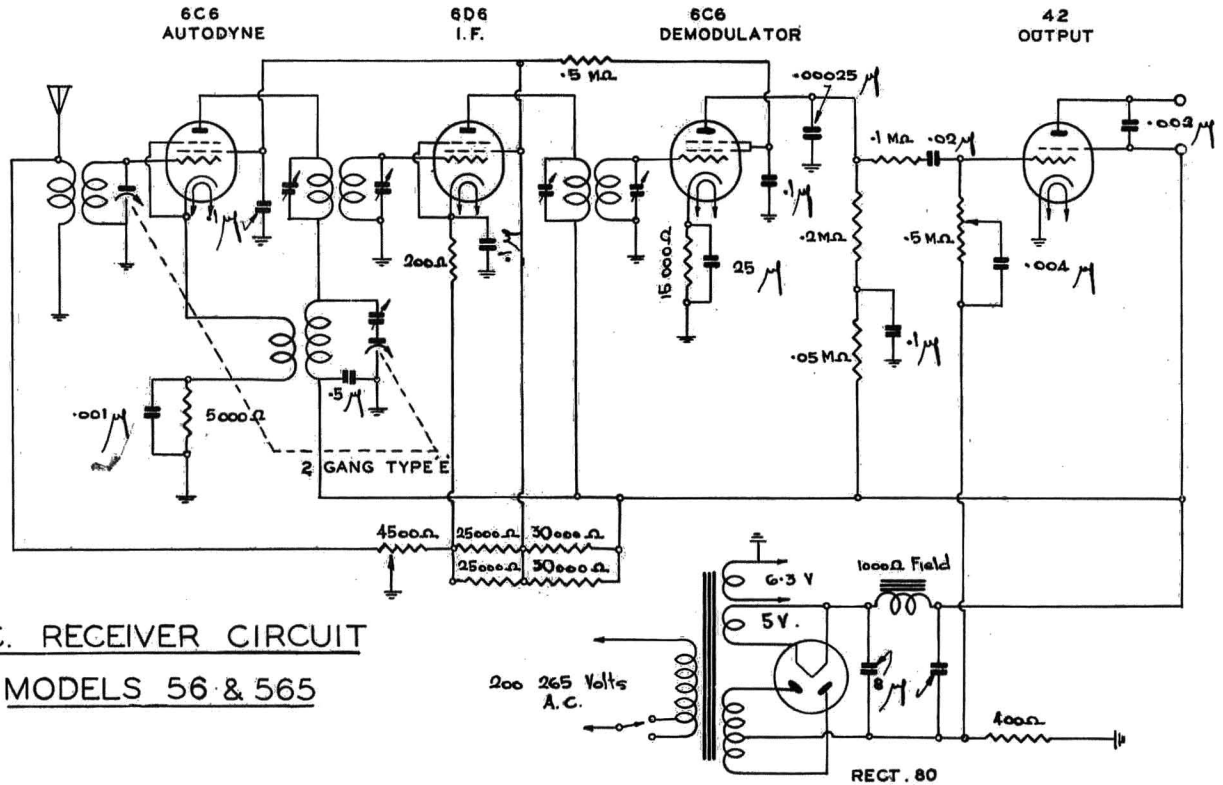

A.C. RECEIVER CIRCUIT

MODELS 56 & 565

CHANGES	STROMBERG - CARLSON (AUSTRALASIA) LIMITED SYDNEY, AUSTRALIA
	DRAWN EXAMINED APPROVED MGN. DIRECTOR DATE 6 · 6 · 35
	DRAWING No. Z 288

Stromberg-Carlson Service Bulletin No. 56/565

Photos of the Table Model 56

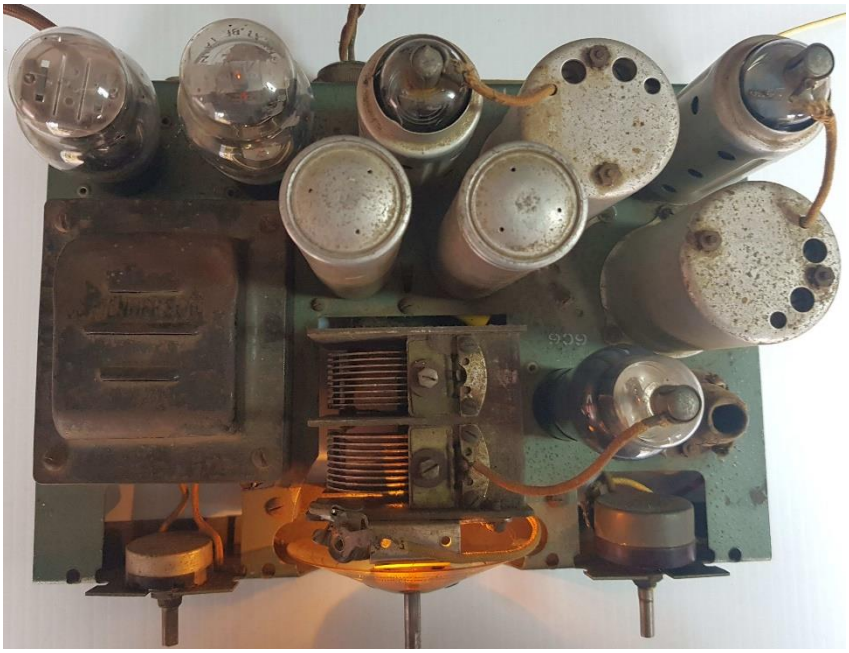

Stromberg-Carlson

RADIO MIRACLE OF 1935

Chromo-phonic *Lifelike* **TONE** *Incomparable Realism* Reproduction

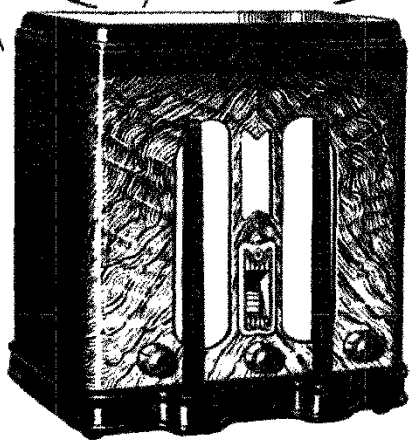

MODEL 56

The newest, finest, mantel model in the field of Radio. Big set features and performance . . . Compact style . . . Craftsman finish.

£17-19-6

Styled FOR MODERN HOMES

ENGINEERED BY THE WORLD'S FOREMOST TECHNICIANS

The new Stromberg Carlson Model 56 is definitely the first model of its kind to provide that tonal richness always considered available only in full size Radio receivers.

It offers the incomparable advantages of Stromberg Carlson's exclusive chromophonic reproduction . . . ensuring more "colourful" tone and greater realism in reproduction . . . in a receiver combining mantel model style and compactness with big set performance.

The Model 56 is a 5 valve superheterodyne with specially designed chassis incorporating a modern Stromberg Carlson circuit design and 8" dynamic speaker. Reception of Interstate Stations is guaranteed in this easily transportable receiver. Features include tuning dial with vernier drive, with wave lengths and frequencies accurately calibrated. Volume control, tone control, hair line selectivity and outstanding sensitivity. The "56" exemplifies Stromberg Carlson's outstanding value at the price of - - - - £17/19/6

Models to suit every individual preference.

Stromberg-Carlson

Chromo-phonic RADIO

Wagga Wireless Distributors

OPPOSITE P.O., WAGGA 'Phone 909

86

Daily Advertiser (Wagga Wagga, NSW) Aug 27, 1935 Page 2.