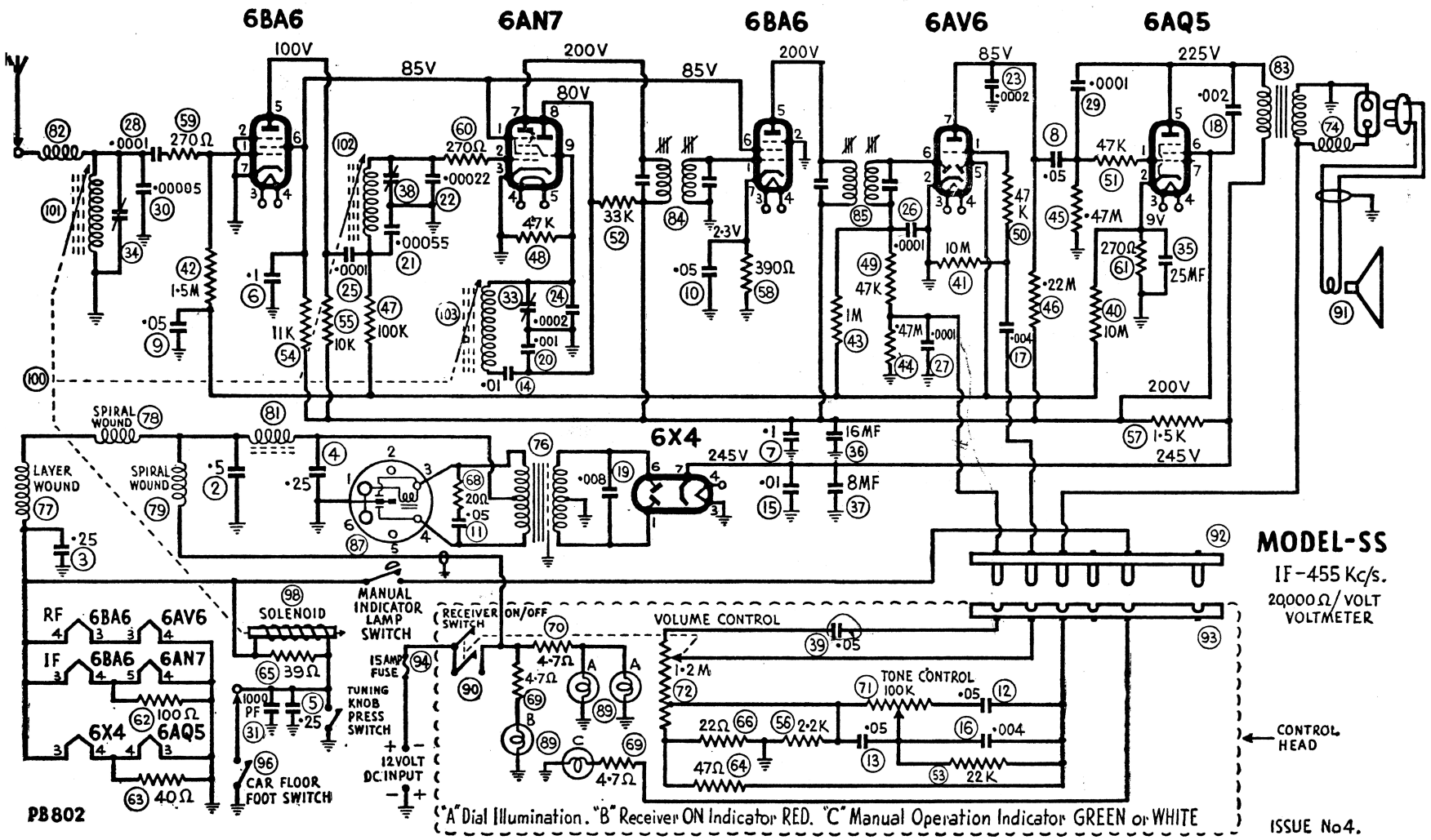
6BA6
6AN7
6BA6
6AV6
6AQ5
6X4
100V
85V
200V
80V
85V
200V
85V
225V
200V
245V
245V
SPIRAL WOUND
LAYER WOUND
SPIRAL WOUND
SOLENOID
MANUAL INDICATOR LAMP SWITCH
RECEIVER ON/OFF SWITCH
VOLUME CONTROL
TONE CONTROL 100K
15 AMP FUSE
TUNING KNOB PRESS SWITCH
12 VOLT DC INPUT
CAR FLOOR FOOT SWITCH
CONTROL HEAD
RF 6BA6 6AV6
IF 6BA6 6AN7
6X4 6AQ5
PB802
MODEL-SS
IF-455 Kc/s.
20,000 Ω/VOLT VOLTMETER
"A" Dial Illumination. "B" Receiver ON Indicator RED. "C" Manual Operation Indicator GREEN or WHITE
ISSUE No4.