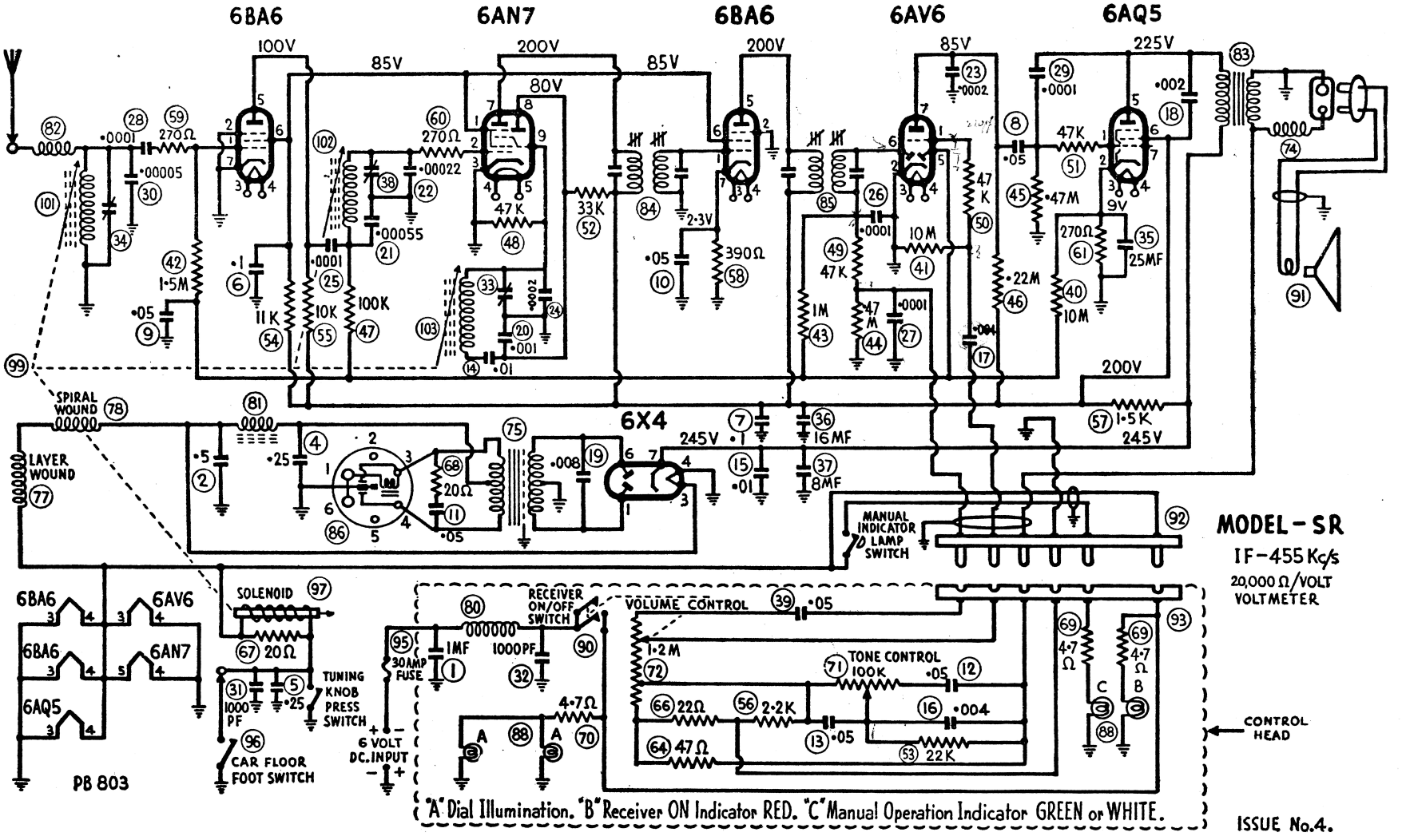
6BA6
6AN7
6BA6
6AV6
6AQ5
6X4
100V
85V
200V
80V
225V
245V
9V
SPIRAL WOUND
LAYER WOUND
SOLENOID
TUNING KNOB PRESS SWITCH
CAR FLOOR FOOT SWITCH
PB 803
30 AMP FUSE
6 VOLT DC. INPUT
RECEIVER ON/OFF SWITCH
VOLUME CONTROL
TONE CONTROL 100K
MANUAL INDICATOR LAMP SWITCH
CONTROL HEAD
MODEL - SR
IF - 455 Kc/s
20,000 Ω/VOLT VOLTMETER
"A" Dial Illumination. "B" Receiver ON Indicator RED. "C" Manual Operation Indicator GREEN or WHITE.
ISSUE No.4.