RF Amplifier
(Wiring Side)

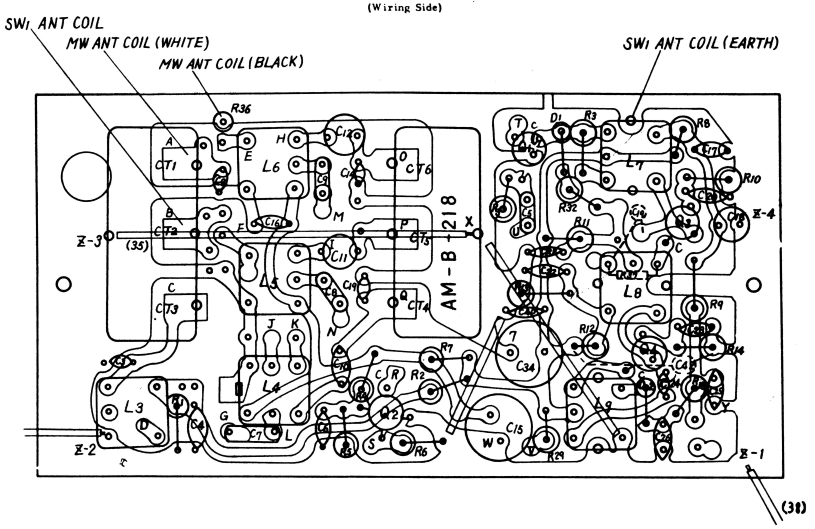

Fig. 3

Rotary Switch
(S1A - S1K)

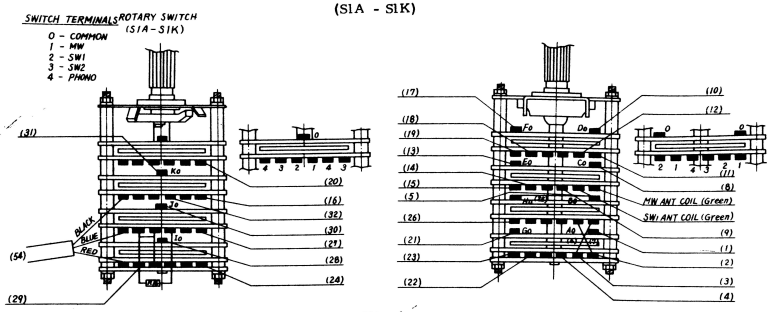

Fig. 6

Volume Control

LEFT SIDE

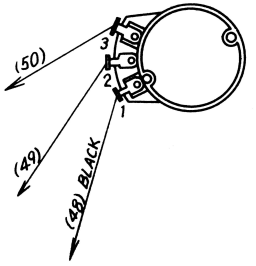

RIGHT SIDE

Player Section

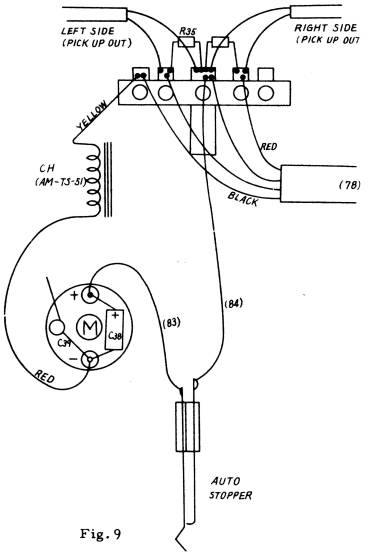

Fig. 9

AF Amplifier
(Wiring Side)

CROWN SPH-140

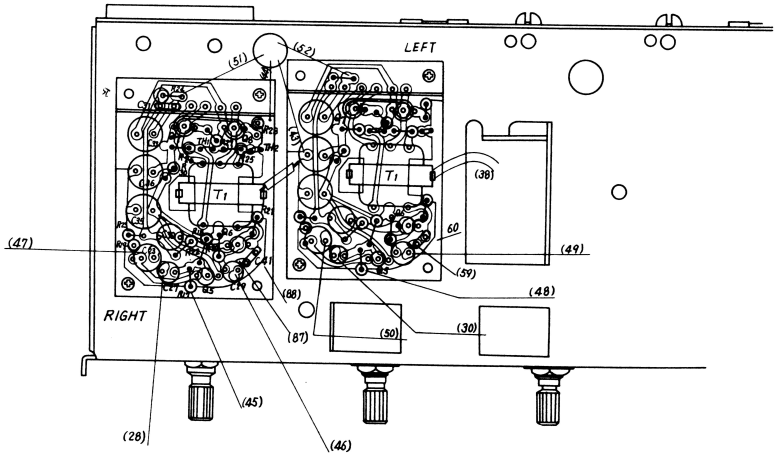

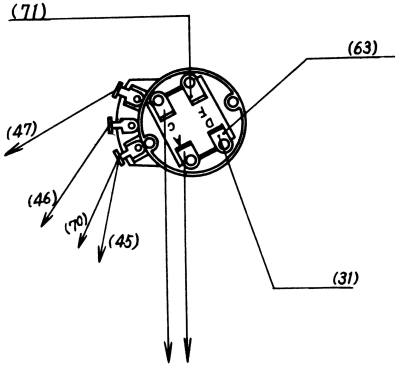

Fig. 7

TONE CONTROL

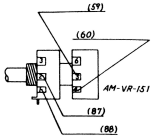

Fig. 8

C13 CROWN MODEL SPH-140

REPLACEMENT PARTS

Symbol No.	Part No.	Description	Symbol No.	Part No.	Description
VR1	AM-VR-98	Variable Resistor, "D" curve, 5kΩ, w/o SW	L9	AM-LI-54	IF Transformer, 15kΩ : 5kΩ
VR2	AM-VR-141	Variable Resistor, "D" curve, 5kΩ, w/SW	T	AM-T-224	Input Transformer, 5kΩ : 300Ω x 2
VR3-4	AM-VR-151	Variable Resistor, "D" curve, 100kΩ	CH	AM-TS-51	Audio Choke, 40mH, 1.5Ω
VC	AM-VC-68	Variable Condenser, 12-430pf	S2 A-B		Power Switch
CT1-3, 4-6	AM-VC-62	Trimmer Condenser, 1.5-9pf	SP1	AM-P-71	Speaker, 2-1/2"
L 1-2	AM-LA-200	Bar Antenna Coil, MW 210μH, SW 7.6μH	SP2	AM-P-79	Speaker, 5"
L3	AM-LA-199	Antenna Coil, 0.69μH	BL	EM-509	Balance Meter
L4	AM-LO-93	Oscillator Coil, 120μH	Rod	AM-K-14	Rod Antenna
L5	AM-LO-151	Oscillator Coil, 6.5μH	Mo	AM-UG-2	Motor, DC 9V
L6	AM-LO-49	Oscillator Coil, 0.62μH	PU	AM-PU-9	Pickup, Ceramic, SP/LP, turnover, stereo
L7	AM-LI-53	IF Transformer, 50kΩ : 500Ω	S1 A-K	AM-S-67	Rotary Switch, 4-12-4
L8	AM-LI-27	IF Transformer, 30kΩ : 500Ω	B1	AM-B-51A	Printed Board (terminal board)
			B2	AM-B-197	Printed Board x 2 (AF amplifier)
			B3	AM-B-218	Printed Board (HF amplifier)
				AM-Z-9	Heat Sink

REPLACEMENT PARTS

Symbol No.	Description
	TRANSISTOR
Q1	2SA234
Q2	2SA234
Q3	2SA12
Q4	2SA12
Q5	2SB443 x 2
Q6	2SB443 x 2
Q7	2SB156 x 2
Q8	2SB156 x 2
	DIODE & THERMISTOR
D1	1N34A
D2	1N34A
TH1	CS-120 x 2
TH2	CS-120 x 2
	RESISTOR
	Fixed compositions, 1/2w, ±10%, unless otherwise specified.
R1	5.6kΩ
R2	33kΩ
R3	2.2kΩ
R4	10kΩ
R5	4.7kΩ
R6	1.8kΩ
R7	560Ω
R8	120kΩ
R9	5.6kΩ
R10	560Ω
R11	1.2kΩ
R12	15kΩ
R13	5.6kΩ
R14	1.2kΩ

Symbol No.	Description
R15	820Ω
R16	4.7kΩ
R17	220kΩ x 2
R18	330kΩ x 2
R19	3.9kΩ x 2
R20	27kΩ x 2
R21	8.2kΩ x 2
R22	680Ω x 2
R23	3.9Ω x 2
R24	680Ω x 2
R25	2.2kΩ x 2
R26	2.2kΩ x 2
R27	1.5Ω x 2
R28	1.5Ω x 2
R29	680Ω
R30	120Ω x 2
R31	220kΩ, 1/4w
R32	1.2kΩ
R33	- - -
R34	560kΩ x 2
R35	560kΩ x 2
R36	100Ω
R37	220kΩ, 1/4w
	CAPACITOR
C1	Ceramic, 20pf
C2	Ceramic, 7pf
C3	Ceramic, 30pf
C4	Ceramic, 0.02μf
C5	Mylar, 0.01μf
C6	Ceramic, 0.02μf
C7	Mylar, 0.01μf
C8	Mylar, 0.001μf
C9	Mylar, 0.001μf

Symbol No.	Description
C10	Ceramic, 460pf
C11	Polyethyrene, 3600pf
C12	Polyethyrene, 8200pf
C13	Ceramic, 15pf
C14	Ceramic, 35pf
C15	Electrolytic, 100μf, 10wv
C16	Ceramic, 0.02μf
C17	Ceramic, 0.02μf
C18	Electrolytic, 30μf, 6wv
C19	Ceramic, 5pf
C20	Ceramic, 0.02μf
C21	Ceramic, 0.02μf
C22	Ceramic, 0.02μf
C23	Ceramic, 0.02μf
C24	Ceramic, 3pf
C25	Ceramic, 0.01μf
C26	Ceramic, 0.01μf
C27	Electrolytic, 10μf, 6wv x 2
C28	Electrolytic, 50μf, 6wv x 2
C29	Electrolytic, 10μf, 6wv x 2
C30	Electrolytic, 50μf, 6wv x 2
C31	Mylar, 0.01μf x 2
C32	Ceramic, 0.001μf x 2
C33	Electrolytic, 300μf, 10wv x 2
C34	Electrolytic, 100μf, 10wv
C35	Electrolytic, 200μf, 10wv x 2
C36	Electrolytic, 200μf, 10wv x 2
C37	Ceramic, 30pf x 2
C38	Electrolytic, 200μf, 10wv
C39	Ceramic, 0.002μf
C40	Ceramic, 0.02μf
C41	Mylar, 0.0068μf x 2
C42	Ceramic, 0.02μf

LEAD CONNECTIONS

Lead No.	Lead Color	Location From	Location To	Refer to Fig.
1	white	S1A-0	VC(ant.)	6
2	green	S1A-1	HF amp.(A)	3, 6
3	yellow	S1A-2	HF amp.(B)	3, 6
4	blue	S1A-3	HF amp.(C)	3, 6
5	black	S1B-0	HF amp.(Z-3)	3, 6
6	yellow	S1B-1	S1A-2	6
7	green	S1B-2	S1A-1	6
8	purple	S1C-0	HF amp.(T)	3, 6
9	shield wire	S1C-3	HF amp.(D)	3, 6
10	white	S1D-0	HF amp.(R)	3, 6
11	green	S1D-1	HF amp.(J)	3, 6
12	yellow	S1D-2	HF amp.(I)	3, 6
13	orange	S1E-0	HF amp.(S)	3, 6
14	light green	S1E-1	HF amp.(G)	3, 6
15	gray	S1E-2	HF amp.(N)	3, 6
16	sky	S1E-3	HF amp.(M)	3, 6
17	white	S1F-0	HF amp.(U)	3, 6
18	beige	S1F-1	HF amp.(K)	3, 6
19	brown	S1F-2	HF amp.(F)	3, 6
20	gray	S1F-3	HF amp.(E)	3, 6
21	gray	S1G-0	VC(osc)	6
22	green	S1G-1	HF amp.(Q)	3, 6
23	yellow	S1G-2	HF amp.(P)	3, 6
24	blue	S1G-3	HF amp.(O)	3, 6
25	black	S1H-0	S1B-0	6
26	blue	S1H-2	S1G-3	6
27	yellow	S1H-3	S1G-2	6
28	sky	S1I-0	right AF amp.(1)	5, 6
29	brown	S1I-3	HF amp.(Y)	3, 6
30	purple	S1J-0	left AF amp.(1)	5, 6
31	red	S1K-0	S2D	6, 7
32	orange	S1K-1-2-3	HF amp.(V)	3, 6
33	black	VC(earth)	earth lug	
34	black	VC(earth)	HF amp.(Z-2)	3
35	black	HF amp.(Z-3)	HF amp.(X)	3
36	black	HF amp.(X)	HF amp.(Z-1)	3
37	black	HF amp.(M)	HF amp.(W)	3
38	black	HF amp.(Z-1)	left AF amp.(8)	3, 5
39	black	left AF amp.(7)	right AF amp.(8)	5
41	black	HF amp.(Z-3)	S1(earth) - left	3
42	black	left AF amp.(7)	S1(earth) - right	5

Lead No.	Lead Color	Location From	Location To	Refer to Fig.
43	black	left AF amp.(7)	terminal board	5
44	black	right AF amp.(8)	terminal board	5
45	black	right VR(1)	right AF amp. (earth)	5, 7
46	yellow	right VT(2)	right AF amp.(3)	5, 7
47	blue	right VR(3)	right AF amp.(2)	5, 7
48	black	left VR(1)	right AF amp. (earth)	5, 7
49	gray	left VR(2)	left AF amp.(3)	5, 7
50	green	left VR(3)	left AF amp.(2)	5, 7
51	red	right AF amp.(6)	terminal board	5
52	orange	left AF amp.(6)	terminal board	5
54	shield wire			
	red	S1I-4	terminal board	6
	blue	S1J-4	terminal board	6
	black	S1K-4	terminal board	6
	shield braid	- -	terminal board	6
59	white	VR3	right AF amp.	5, 8
60	brown	VR3	right AF amp. (earth)	5, 8
61	shield wire			
	red	BL(right)	right AF amp.(5)	5
	black	BL(left)	left AF amp.(5)	5
63	orange	BL(common)	S1D	
64	white	antenna	C1	
65	black	earth lug	measurement terminal	
66	black	left SP1(-)	right SP1(-)	
68	red	left SP1(+)	terminal board	
69	black	left SP1(-)	terminal board	
70	red	battery holder(+)	VR1	
71	black	battery holder(-)	S1F	
72	yellow	right SP1(+)	terminal board	
73	green	right SP1(-)	terminal board	
83	yellow	motor(+)	S3a	9
84	green	S3b	earth lug	9
87	orange	left AF amp.	VR3(2)	8
88	light green	left AF amp. (earth)	VR3(1)	8
89	blue	S1D-3	HF amp.(H)	3, 6

AF Amplifier
(Component Side)

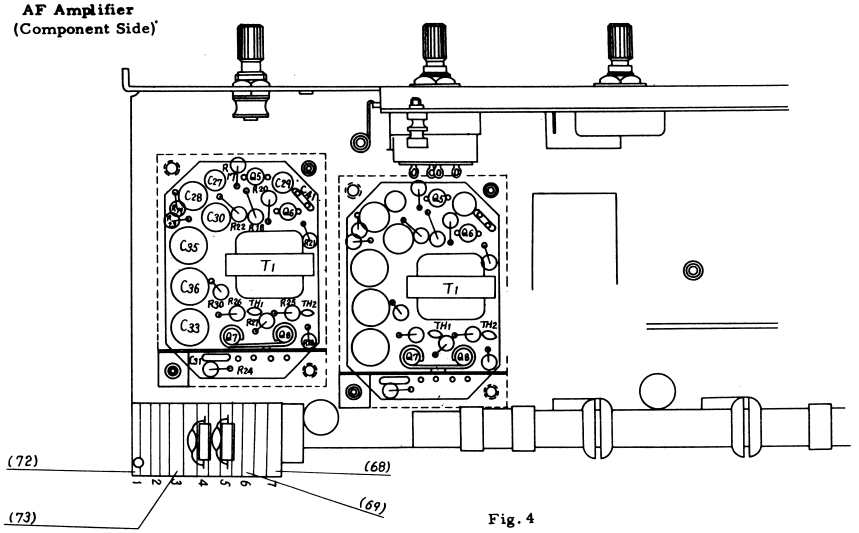

Fig. 4

CROWN
SERVICE MANUAL
MODEL SPH-140

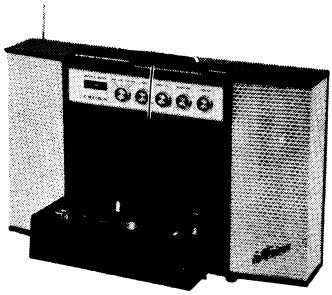

C13 CROWN MODEL SPH-140

SPECIFICATIONS

TYPE:
12 Transistor, MW/SW1/SW2 3 Band, 3 speed, Portable Stereo Radio-Phonograph

MAIN PARTS:

Transistor	2SA234 (converter) 2SA234 (oscillator) 2SA12 x 2 (IF amplifier) 2SB443 x 2 (impedance matching) 2SB443 x 2 (audio amplifier) 2SB156 x 4 (power amplifier)
Diode	1N34A (detector) 1N34A (AGC)
Thermistor	CS-120 x 2 (temperature compensator)
Bar Antenna	10ϕ x 140m/m, ferrite core
Rod Antenna	5 steps, telescopic, 1005m/m
Variable Condenser	2 gang, equal capacitance
Band Selector Switch	4 section, 12 circuit 4 position
Pickup	ceramic, SP/LP, turnover, stereo
Motor	DC 9V, w/governor
Speaker	5", 16Ω x 2, 2-1/2", 8Ω x 2
Variable Resistor ..	5kΩ, "D" curve, w/SW 5kΩ, "D" curve, w/o SW
Dial	string drive, slide rule, vernier
Cabinet	wood

RATING & PERFORMANCE:

Frequency Range...	MW 535-1605 Kc SW1 3-9 Mc SW2 9-23 Mc
IF	AM 455 Kc
Output Power	450 + 450mW(600+600mW max.)
Power Source	battery: DC 9V, "D" size battery x 6 AC: use AC adaptor
Maximum Sensitivity	MW 36dB ±4dB/1000 Kc (0dB=1μv/m, W=50mW) SW1 34dB ±6dB/6 Mc (0dB 1μv/m, W=50mW) SW2 20dB ±4dB/16 Mc (0dB 1μv/m, W=50mW)
Useable Sensitivity	MW 38dB ±2dB/1000 Kc (S/N 10dB, W=50mW) SW1 37dB ±3dB/6 Mc (S/N 10dB, W=50mW) SW2 22dB ±3dB/16 Mc (S/N 10dB, W=50mW)
S/N Ratio	MW 32dB ±2dB/1000 Kc (input=60dB) SW1 33dB ±3dB/6 Mc (input=60dB) SW2 35dB ±3dB/16 Mc (input=44dB)
Selectivity	more than 22dB (detuning ±10Kc) (S/N=10dB, W=50mW)
AGC Merit	more than 40dB (W=50mW, input=94dB)
Electrical Frequency Response	60-3500c/s (dummy load used)
Audio Frequency Response.....	60-1000c/s
Non-working Voltage	4V or lower
Current consumption	no signal time: 35mA ±10mA useable output: 100mA ±20mA motor current: less than 65mA
Drive System	rim drive, 33-1/3, 45 and 78 rpm
Wow	0.5% max.
Dimensions	16-3/16 x 26-3/4 x 5-1/2 inch
Weight	20.5 lbs (with batteries)

SCHEMATIC DIAGRAM

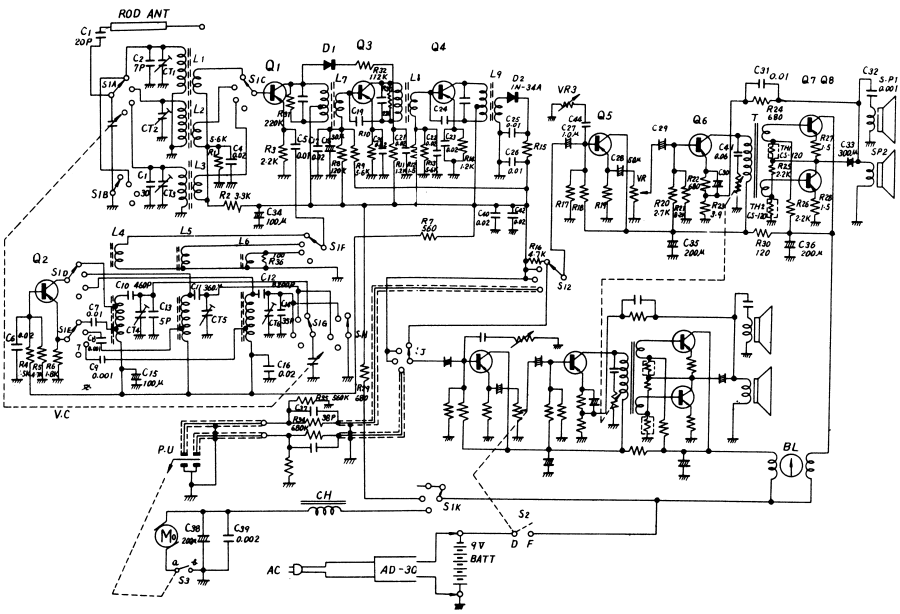

Fig. 1