SP5-8™

Service Manual

KURZWEIL®

©2013 Young Chang Co., Ltd. All rights reserved. Kurzweil® is a product line of Young Chang Co., Ltd. Kurzweil®, Young Chang®, V. A. S. T.®, and SP5-8™ are trademarks of Young Chang Co., Ltd. All other trademarks and copyrights are property of their respective companies. Product features and specifications are subject to change without notice.

Part Number 910550-001 — May 2013

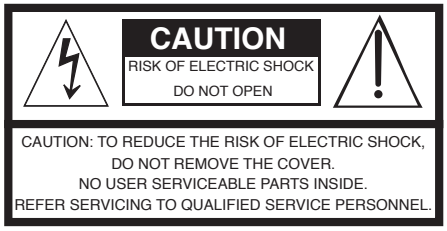

The lightning flash with the arrowhead symbol, within an equilateral triangle is intended to alert the user to the presence of uninsulated "dangerous voltage" within the product's enclosure that may be of sufficient magnitude to constitute a risk of electric shock to persons.

The exclamation point within an equilateral triangle is intended to alert the user to the presence of important operating and maintenance (servicing) instructions in the literature accompanying the product.

IMPORTANT SAFETY & INSTALLATION INSTRUCTIONS

INSTRUCTIONS PERTAINING TO THE RISK OF FIRE ELECTRIC SHOCK , OR INJURY TO PERSONS

WARNING: When using electric products, basic precautions should always be followed, including the following:

1. Read all the Safety and Installation Instructions and Explanation of Graphic Symbols before using the product.
2. This product must be grounded. If it should malfunction or break down, grounding provides a path of least resistance for electric current to reduce the risk of electric shock. This product is equipped with a power supply cord having an equipment-grounding conductor and a grounding plug. The plug must be plugged into an appropriate outlet which is properly installed and grounded in accordance with all local codes and ordinances.

   DANGER: Improper connection of the equipment-grounding conductor can result in a risk of electric shock. Do not modify the plug provided with the product – if it will not fit the outlet, have a proper outlet installed by a qualified electrician. Do not use an adaptor which defeats the function of the equipment-grounding conductor. If you are in doubt as to whether the product is properly grounded, check with a qualified serviceman or electrician.
3. Do not use this product near water – for example, near a bathtub, washbowl, kitchen sink, in a wet basement, or near a swimming pool, or the like.
4. This product should only be used with a stand or cart that is recommended by the manufacturer.
5. This product, either alone or in combination with an amplifier and speakers or headphones, may be capable of producing sound levels that could cause permanent hearing loss. Do not operate for a long period of time at a high volume level or a level that is uncomfortable. If you experience any hearing loss or ringing in the ears, you should consult an audiologist.
6. This product should be located so that its location or position does not interfere with its proper ventilation.
7. The product should be located away from heat sources such as radiators, heat registers, or other products that produce heat.
8. The product should be connected to a power supply only of the type described in the operating instructions or as marked on the product.
9. This product may be equipped with a polarized line plug (one blade wider than the other). This is a safety feature. If you are unable to insert the plug into the outlet, contact an electrician to replace your obsolete outlet. Do not defeat the safety purpose of the plug.
10. The power supply cord of the product should be unplugged from the outlet when left unused for a long period of time. When unplugging the power supply cord, do not pull on the cord, but grasp it by the plug.
11. Care should be taken so that objects do not fall and liquids are not spilled into the enclosure through openings.
12. The product should be serviced by qualified service personnel when:
    A. The power supply cord or the plug has been damaged;
    B. Objects have fallen, or liquid has been spilled into the product;
    C. The product has been exposed to rain;
    D. The product does not appear to be operating normally or exhibits a marked change in performance;
    E. The product has been dropped, or the enclosure damaged.
13. Do not attempt to service the product beyond that described in the user maintenance instructions. All other servicing should be referred to qualified service personnel.
14. **WARNING:** Do not place objects on the product's power supply cord, or place the product in a position where anyone could trip over, walk on, or roll anything over cords of any type. Do not allow the product to rest on or be installed over cords of any type. Improper installations of this type create the possibility of a fire hazard and/or personal injury.

RADIO AND TELEVISION INTERFERENCE

WARNING: Changes or modifications to the instrument not expressly approved by Young Chang could void your authority to operate the instrument.

IMPORTANT: When connecting this product to accessories and/or other equipment use only high quality shielded cables.

NOTE: This instrument has been tested and found to comply with the limits for a Class B digital device, pursuant to Part 15 of the FCC Rules. These limits are designed to provide reasonable protection against harmful interference in a residential installation. This instrument generates, uses, and can radiate radio frequency energy and, if not installed and used in accordance with the instructions, may cause harmful interference to radio communications. However, there is no guarantee that interference will not occur in a particular installation. If this instrument does cause harmful interference to radio or television reception, which can be determined by turning the instrument off and on, the user is encouraged to try to correct the interference by one or more of the following measures:

- Reorient or relocate the receiving antenna.
- Increase the separation between the instrument and the receiver.
- Connect the instrument into an outlet on a circuit other than the one to which the receiver is connected.
- If necessary consult your dealer or an experienced radio/television technician for additional suggestions.

NOTICE

This apparatus does not exceed the Class B limits for radio noise emissions from digital apparatus set out in the Radio Interference Regulations of the Canadian Department of Communications.

AVIS

Le present appareil numerique n'emet pas de bruits radioelectriques depassant les limites applicables aux appareils numeriques de la class B prescrites dans le Reglement sur le brouillage radioelectrique edicte par le ministere des Communications du Canada.

SAVE THESE INSTRUCTIONS

IMPORTANT SAFETY INSTRUCTIONS

1) Read these instructions.
2) Keep these instructions.
3) Heed all warnings.
4) Follow all instructions.
5) Do not use this apparatus near water.
6) Clean only with dry cloth.
7) Do not block any of the ventilation openings. Install in accordance with the manufacturer's instructions.
8) Do not install near any heat sources such as radiators, heat registers, stoves, or other apparatus (including amplifiers) that produce heat.
9) Do not defeat the safety purpose of the polarized or grounding-type plug. A polarized plug has two blades with one wider than the other. A grounding type plug has two blades and a third grounding prong. The wide blade or the third prong are provided for your safety. If the provided plug does not fit into your outlet, consult an electrician for replacement of the obsolete outlet.
10) Protect the power cord from being walked on or pinched, particularly at plugs, convenience receptacles, and the point where they exit from the apparatus.

11) Only use attachments/accessories specified by the manufacturer.
12) Use only with a cart, stand, tripod, bracket, or table specified by the manufacturer, or sold with the apparatus. When a cart is used, use caution when moving the cart/ apparatus combination to avoid injury from tip-over.
13) Unplug this apparatus during lightning storms or when unused for long periods of time.
14) Refer all servicing to qualified service personnel. Servicing is required when the apparatus has been damaged in any way, such as power-supply cord or plug is damaged, liquid has been spilled or objects have fallen into the apparatus, the apparatus has been exposed to rain or moisture, does not operate normally, or has been dropped.
15) Allow adequate ventilation for the power adapter. Do not hide it under a carpet or behind a curtain or place it in an enclosed space where heat buildup can occur.

Warning: To reduce the risk of fire or electric shock, do not expose this apparatus to rain or moisture. Do not expose this equipment to dripping or splashing and ensure that no objects filled with liquids, such as vases, are placed on the equipment.

To completely disconnect this equipment from the AC Mains, disconnect the power supply cord plug from the AC receptacle.

Kurzweil International Contacts

Contact the Kurzweil office listed below to locate your local Kurzweil representative.

US Customers:

American Music & Sound
22020 Clarendon Street, Suite 305
Woodland Hills, CA 91367

Tel: 800-431-2609
Fax: 818-597-0411
Email: Info@AmericanMusicAndSound.com

Customers outside the US:

Young Chang Co., LTD.
9th Floor, Bldg 102, I-Park,
Jeongja-Dong, Bundang-Gu, Seongnam-Si, Gyeonggi-Do
463-859 South Korea

Tel: +82 31 786 7900

www.kurzweil.com

WORLD-WIDE TECHNICAL SUPPORT
Email: support@kurzweil.com.

Table of Contents

Kurzweil International Contacts iv

Chapter 1 Introduction

Notes, Cautions, Warnings 1-1
Front Panel Features 1-2
Shift, Sw, and Zone Buttons and Control Sliders 1-2
Mode and Function Buttons 1-3
Navigation 1-4
Category Buttons and KB3 LED 1-4
Double Press Buttons 1-5
Pitch and Mod Wheels 1-5
Rear Panel Features 1-6

Chapter 2 Printed Circuit Boards

Function Overview 2-1
Engine PCB Function Summary 2-1
General 2-1
CPU 2-2
Memory 2-2
Scanning 2-3
Synthesis ASIC 2-3
D-to-A converter 2-3
USB Controller 2-4
MIDI (5-pin) Interface 2-4
Voltage Regulators 2-4
Front Panel PCBs Function Summaries 2-5
Right and Left Front Panel PCBs 2-6
ScanPort interface to front panel LED indicators 2-6
ScanPort interface to front panel buttons 2-6
Right Front Panel PCB 2-6
ScanPort interface to the keyboard 2-6
MIDI In/Out connector interface 2-6
DC power input jack and voltage regulators 2-7
LCD contrast voltage adjuster 2-7
Left Front Panel PCB 2-7
Switch Pedals and CC Pedal connectors and interface 2-7
ScanPort interface to Pitch and Mod wheels 2-8
Volume Control and control sliders 2-8
Audio differential amplifiers for Left/Right output jacks 2-8
Amplifier for Headphones jack 2-8
ScanPort analog multiplexor 2-8
Audio Muting circuits 2-9
Automatic Shutdown (ERP Control) PCB 2-9

Chapter 3 Diagnostics

Diagnostic Tests 3-1
Entering Diagnostics 3-1
Display and Front Panel Buttons 3-2
Test Results 3-2
Diagnostic Test Modes 3-2
Run Once 3-2
Loop 3-2
Continuous 3-2
Description of Tests 3-3
SDRAM Refresh 3-3
MIDI Loopback 3-3
Internal Flash 3-3
MARA Validity 3-3
MARA Delay RAM 3-4
MARA Sound ROM 3-4
Audio Output 3-4
Scanner DIAG 3-5
Scanner DIAG tests 3-5
Burn-in Test 3-6

Chapter 4 Disassembly/Assembly

Introduction 4-1
Notes, Cautions, Warnings 4-1
Cables, Connectors 4-1
Required Tools and Materials 4-1
Top Enclosure 4-2
Opening the SP5-8 4-2
Removing the Endcaps 4-3
Removing the Top Enclosure 4-3
Replacing the Top Enclosure 4-4
Replacing the Endcaps 4-5
Closing the SP5-8 4-5
Removing the Engine PCB 4-6
Replacing the Engine PCB 4-7
Removing the Right Front Panel PCB 4-8
Replacing the Right Front Panel PCB 4-9
Removing the LCD 4-10
Replacing the LCD 4-10
Removing the Left Front Panel PCB 4-10
From the Rear Panel 4-10
From the Front Panel 4-10
Inside the Top Enclosure 4-11
Replacing the Left Front Panel PCB 4-12
On the Rear Panel 4-12
On the Front Panel 4-12

Bottom Enclosure....4-13
Removing the Wheels Assembly....4-13
Replacing the Wheels Assembly....4-14
Removing the Keyboard Assembly....4-14
Replacing the Keyboard Assembly....4-15
Removing Keys....4-15
Replacing Keys....4-17
Keyboard Contact PCBs....4-18
Removing the Lo Contact PCB....4-18
Replacing the Lo Contact PCB....4-18
Removing the Mid Contact PCB....4-19
Replacing the Mid Contact PCB....4-19
Removing the Hi Contact PCB....4-20
Replacing the Hi Contact PCB....4-20
Removing the Keyboard Contact Strips....4-21
Replacing the Keyboard Contact Strips....4-21

Chapter 5 Troubleshooting & Maintenance

Introduction....5-1
Surface-Mount Devices....5-1
Cables, Connectors....5-1
Boot Loader....5-2
Entering the Boot Loader....5-2
Resets....5-2
Software Updates....5-3
Power Problems....5-4
Dead: LCD, LEDs not lit....5-4
Audio Problems....5-4
No Audio....5-4
Front Panel Problems....5-5
LCD not lit, LEDs are lit....5-5
LCD, LEDs not lit, buttons, or controllers not working....5-5
Keyboard Problems....5-6
Dead Keyboard....5-6
Dead Note(s) or no velocity sensitivity....5-6
One or More in a Section....5-6
Interconnect Diagram....5-7

Chapter 6 Replacement Parts

Printed Circuit Boards and Assemblies....6-1
Keyboard Assembly....6-1
Right Front Panel PCB....6-2
Left Front Panel PCB....6-2
Miscellaneous....6-2

Chapter 7 Schematics

Engine PCB—SH7203 CPU, Memory, and Debug UART Header (1 of 5) 7-3
Engine PCB—MARA (2 of 5) 7-4
Engine PCB—MARA Clock, Delay Memory, ScanPort, CPLD (3 of 5) 7-5
Engine PCB—Sound ROM, LCD INTF, Audio Outputs, USB I/F (4 of 5) 7-6
Engine PCB—Power Circuitry, Test Headers , Reset (5 of 5) 7-7
Front Panel Right PCB—Button, LED (1 of 2) 7-8
Front Panel Right PCB (2 of 2) 7-9
Front Panel Left PCB (1 of 2)) 7-10
Front Panel Left PCB (2 of 2) 7-11
Automatic Shutdown (ERP Control) PCB 7-12

Chapter 1
Introduction

This chapter provides the service technician with a layout of the control and rear panel features, as well as a brief explanation of their functions. For complete instructions, consult the SP5-8 Musician's Guide.

Notes, Cautions, Warnings

Please pay special attention to all Notes, Cautions, and Warnings symbols used throughout this manual.

A brief description of these symbols follows:

Note: Provides additional information, emphasizes specific instructions, and indicates differences between models.

Caution: Instructs you to proceed cautiously so that damage does not occur to the unit or individual components.

Warning: Alerts you so that damage does not occur to yourself, others, or external devices.

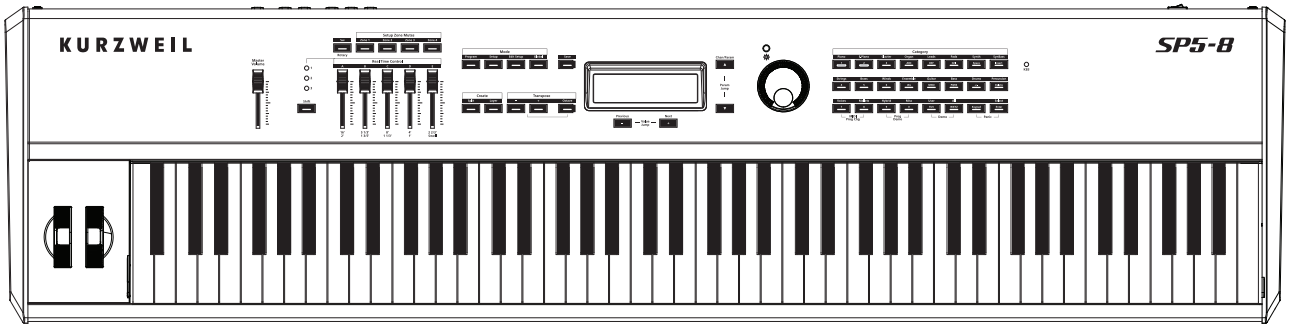

Front Panel Features

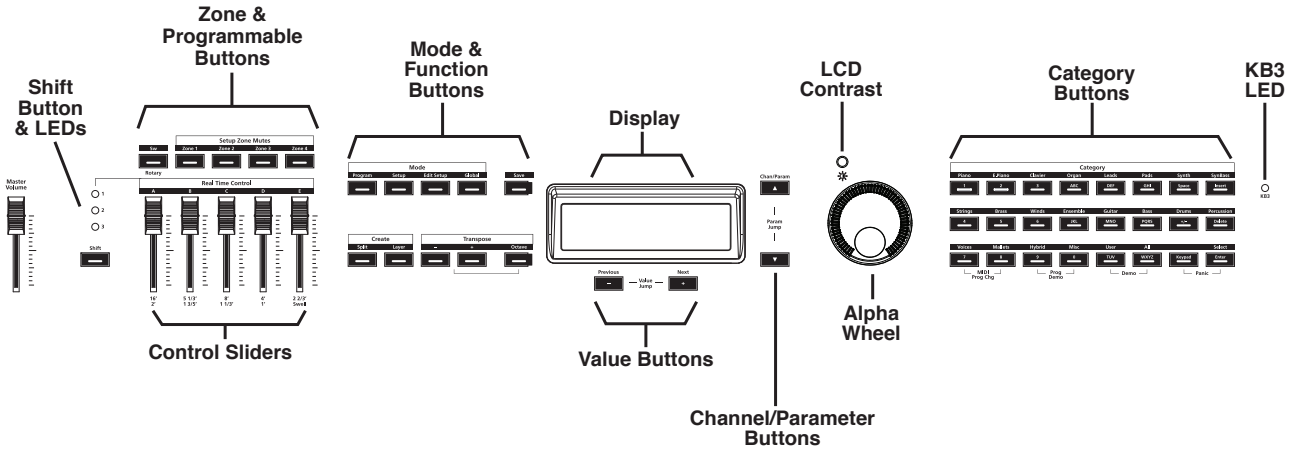

Shift, Sw, and Zone Buttons and Control Sliders

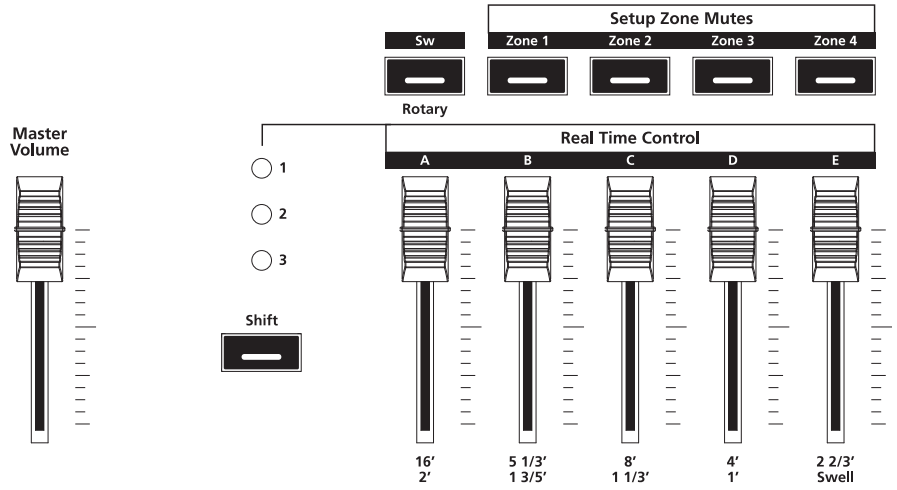

Master Volume slider—Adjusts the overall volume.

Setup Zone buttons—Pressing a **Zone** button will mute or unmute the zone. Zones are the independent regions of the keyboard that make up a Setup.

Sw button—Depending on the current mode (Program or Setup), the **Sw** button can be programmed to do a variety of functions.

Control sliders, **Shift** button and **LEDs**—These sliders can be assigned to send MIDI continuous controller values. Each slider can control three separate functions giving you access to 15 MIDI continuous controllers. Think of this as three rows of five sliders. Press the **Shift** button to select a row of sliders. The lit LED above the **Shift** button indicates the active row.

While playing KB3 programs, the first nine sliders act like tonewheel organ drawbars. The remaining six can perform other functions.

Mode and Function Buttons

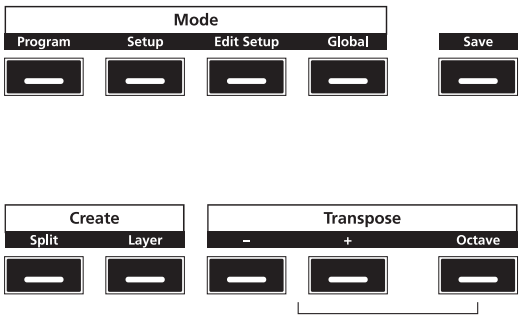

Program—Press the **Program** button to enter Program Mode to select and play different programs.

Setup—Press the **Setup** button to enter Setup Mode to select different configurations of programs, controller and MIDI channel assignments.

Edit Setup—Press the **Edit Setup** button to enter Edit Setup Mode to edit and create user Setups.

Global—Press the **Global** button to enter Global Mode to edit parameters that affect the entire unit. In Global Mode you can also restore factory defaults with a hard reset.

Save—Depending on the current mode, press the **Save** button to save changes to the current Program or Setup (a user program in Program Mode, a copy of the current setup in Setup Mode, and the currently edited setup in Edit Setup Mode).

Split—Press the **Split** button to perform the Split function. The Split Function allows you to split Programs and Setups such that keys in one region of the keyboard produce different sounds than another region.

Layer—Press the **Layer** button to perform the Layer function. The Layer Function allows you to layer Programs and Setups such that more than one sound can be produced by striking one key.

Transpose – and **Transpose + buttons—**Press the **Transpose –** button to transpose the current program or setup down by one semitone. Press the **Transpose +** button to transpose the current program or setup up by one semitone.

Octave—If the **Octave** button is active, pressing the **Transpose +** or **Transpose –** buttons will transpose the current Program or Setup in octaves (+/– 12 semitones). The maximum transposition value is +/–36.

Navigation

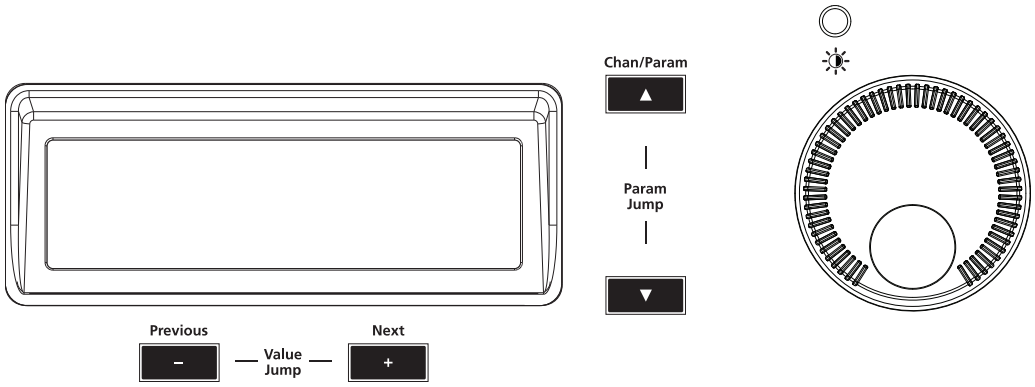

LCD—Twenty character, 2 line liquid crystal display.

Previous—Press the **Previous** button to select the previous or lower value or item.

Next—Press the **Next** button to select the next or higher value or item.

Chan / Param Up and Down—Use these buttons to move through the list of available parameters for the current mode.

LCD Contrast—Turn this rotary potentiometer to adjust the LCD for the best viewing angle.

Alpha Wheel—Turn the **Alpha Wheel** to increase or decrease a value by one or several increments.

Category Buttons and KB3 LED

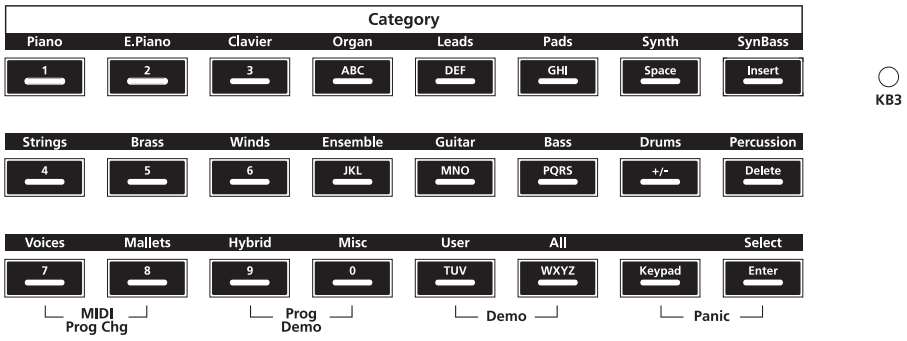

Category buttons—There are 24 Category buttons. Twenty buttons to select Programs by instrument type, two buttons (**User** and **All**) that allow you to scroll through Programs and Setups, and two buttons (**Keypad** and **Enter**) to select and enter the alphanumeric data. Note that on each button the secondary alphanumeric function is printed in white ink.

KB3 LED—This LED is lit when the current Program is a KB3 Program.

Double Press Buttons

Certain buttons when simultaneously pressed with another button provide secondary functions. These are called double press buttons. A description of each of the SP5-8's double press buttons begins below.

Reset Transposition—Simultaneously press the Transpose – and Transpose + buttons to restore the current program or setup to no transposition.

Value Jump—Simultaneously press the **Previous** and **Next** buttons to jump to the next group of items (Program, Setup, and Edit Setup Mode).

Paramenter Jump—Simultaneously press the **Chan / Param Up** and **Down** buttons to jump a specific parameter (Edit Setup Mode only).

MIDI Program Change—Simultaneously press the **Voices** and **Mallets** category buttons to enter the MIDI Program Change Function page and send MIDI Program changes to any sound module connected in a MIDI chain to the SP5-8.

Program Demo—Simultaneously press the **Hybrid** and **Misc** category buttons to enter Program Demo Mode and play a demo song for the current Program.

Demo—Simultaneously press the **User** and **All** category buttons to enter Demo Mode and listen to a demo sequence.

Panic—Simultaneously press the **Keypad** and **Enter** category buttons to send an All Notes/All Controllers Off message to the SP5-8 and connected modules.

Pitch and Mod Wheels

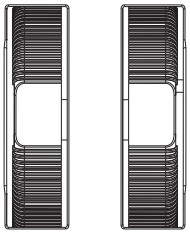

Pitch and Mod wheels—Use the Pitch wheel to vary the pitch up or down. Assign the Mod wheel to a parameter that alters some aspect of the sound (e.g., vibrato, filter depth) when changed.

Rear Panel Features

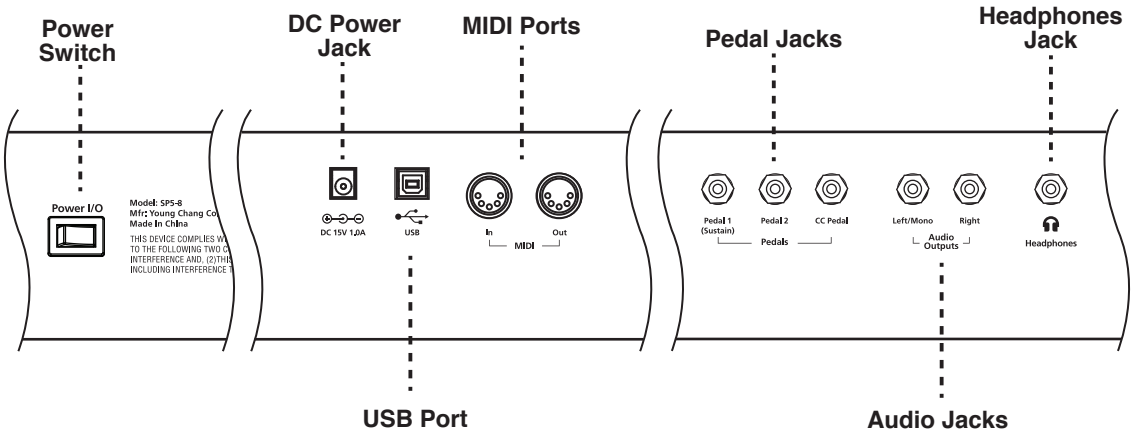

DC Power Jack—Connect the DC Adapter to this jack.

USB Port—Connect a USB cable to this port to send and receive MIDI, manage user data or to connect to a computer for system updates.

MIDI In & Out Port—Use the MIDI In and Out ports to connect the SP5-8 to other MIDI devices to receive and send MIDI data.

SW Pedal (Sustain Pedal)—Use these two 1/4" jacks to connect switch pedals that can be assigned to control sustain, sustenuto, and on/off functions.

CC Pedal—Use this 1/4" jack to connect a continuous controller pedal and assign it to control volume, expression, and continuous control functions.

Audio Out—Use these 1/4" jacks to connect the SP5-8 to external audio equipment.

Headphones—Use this 1/4" stereo headphone jack to connect stereo headphones to listen to the SP5-8.

Chapter 2
Printed Circuit Boards

Function Overview

The SP5-8 contains three main printed circuit boards (PCB): the Engine PCB, the Right Front Panel PCB, and the Left Front Panel PCB.

To greatly generalize:

The Engine PCB contains everything concerning sample playback, audio effects, and the functions of the SP5-8's operating system.

The Right and Left Front Panel PCBs help the Engine PCB communicate with the SP5-8's buttons, LEDs, sliders, Spin knob, Pitch and Mod wheels, pedals, keyboard, and rear panel connectors. They also contain the power supply and audio amplifier circuits.

Engine PCB Function Summary

The SP5-8's Engine PCB performs the following functions:

1. CPU for the entire system
2. Synthesis and effects for all of the sounds
3. Sample ROM
4. D-to-A converter for the synthesizer
5. Non-volatile storage of all user data
6. Scanner for front panel buttons, LEDs, sliders, Spin knob, and the keyboard
7. USB controller
8. MIDI interface, both 5-pin and USB

The following function summary descriptions reference the PC3LE Engine PCB, Rev F Ver 1, schematic circuit drawings (Chapter 7, pages 7-3 through 7-7).

General

The Engine PCB contains the system CPU (a 200MHZ Renesas SH2A integrated microcontroller), sound synthesis ASIC (Kurzweil MARA), and player control/user interface scanning. The following paragraphs give a brief summary of these major functions and associated functional blocks.

Boot Sequence

The SP5-8 uses a modern tiered memory architecture and boots much like a desktop computer. The sequence is essentially:

1. The Right Front Panel PCB, which contains the power supply, produces a signal (PWRUPRST_L) that goes high when the main DC power (+5V) has been stable for approximately 0.5 seconds.
2. The CPU (U1) is enabled and begins fetching instructions from Boot Flash (U4), which contains the initial bootup code.
3. After initialization, the bootup code checks the contents of the NAND Flash, U3. U3 is essentially a solid-state disk drive that acts like the hard disk in a desktop computer. If it is formatted and has the necessary files installed, the "second level" boot loader program is read into RAM (U2) and run. Otherwise a more limited function boot loader program, also in the Boot Flash (U4), is run. (Normally the latter should only happen at the factory before installing the OS for the first time.)
4. The second level boot loader then loads the operating system software and soundware "object data" from U3. The LCD will show "Loading..." during this time.
5. Bootup is now complete and the unit is ready to play.

Note: Step 4 is aborted if the **Shift** button is held down during bootup. The boot loader can then be used to update the operating system software and soundware objects or run the diagnostics.

CPU

The CPU (U1, page 1, zone C4) is a Renesas SH7203, which is a member of the SH-2A family. This highly efficient, low-power, RISC processor is very effective in musical instruments.

X1 is the CPU clock crystal that operates at 16.67MHz. The CPU multiplies that by four to produce the 66.67MHz Bus Clock (called SDRAM_CLK, U1-50) and by 12 to make the 200MHz core clock.

Reset to the CPU (U1-59) comes from the reset circuit on page 5, zone A4. This circuit receives Power OK from the Right Front Panel PCB via J23.

Memory

The CPU memory is located along the right side of page 1. As previously described, the CPU initially boots from Boot Flash, U4. This is non-volatile memory that is programmed once at the factory. However, if a special Boot EPROM Module is plugged onto J1, then the CPU will boot from it instead. When Engine PCBs are manufactured, the factory uses this module to load U4. If the data in U4 becomes corrupted and the CPU cannot boot, the EPROM module can be used to reload U4.

U3 is a NAND Flash chip, which is very similar to what is used in memory cards and USB "thumb" drives. It holds the operating system code, sound programs and setups, and user data (user sound programs and MIDI sequences). The capacity is 64MB.

U2 is system RAM. After bootup, the operating software executes from system RAM. It also holds currently used sound programs and MIDI sequences.

Scanning

Software in the operating system also performs scanning of the player controls (keyboard and pedals) and the user interface (UI) controls (buttons, LEDs, Spin knob, sliders, and wheels). This is accomplished through a simple, Kurzweil standardized, interface called ScanPort (J7, page 3, zone D1). Most of the circuits for scanning are actually on the Right and Left Front Panel PCBs; only a couple of buffers (U6, U8), an analog amplifier (U9), and decoding logic (U11) are on the Engine PCB. See the Right and Left Front Panel PCB descriptions for more details about ScanPort operation.

Synthesis ASIC

Page 2 has the MARA synthesis ASIC, U5. This proprietary, Kurzweil designed VLSI chip integrates the following synthesizer circuits:

- 64 sample playback channels, each with independent playback rate
- 64 amplitude envelope blocks
- 256 DSP processors, each with independent envelope
- Effects processor with 16 processing blocks
- Patching array for interconnecting the above resources
- Digital audio formatting circuits

The instrument sound samples are stored in Sound ROM (page 4, zone 5D). The standard SP5-8 has 64MB (only U13 installed) of Sound ROM. Other products using the same Engine PCB may have additional Sound ROM installed at U14.

The effects processor also uses an external Delay RAM (U12, page 3, zone A4). Pops, audible crashing sounds, and other extraneous noises are often caused by defective Delay RAM or connections to it.

D-to-A converter

U15 (page 4, zone D1) is a digital-to-analog converter. It connects directly to MARA on the digital side and directly to the Audio Out header (J11) on the analog side. Amplifiers and reconstruction low-pass filters are on the Left Front Panel PCB. Although U15 is an 8-channel DAC, only the first two channels (L1 and R1) are used in the SP5-8.

A separate MUTE signal comes directly from the CPU to suppress pops and clicks during power-up and power-down. MUTE must have a low logic level (less than 0.8V) to enable audio on the Left Front Panel PCB.

USB Controller

The CPU has an integrated USB controller that can be either Master or a Slave but not at the same time. Switching circuits (page 4, zone B1) switch between the two functions. In the SP5-8, the actual USB connector is on the Right Front Panel PCB and connects to the Engine PCB by two cables.

MIDI (5-pin) Interface

The CPU has an integrated UART configured for standard MIDI In/Out. The actual 5-pin MIDI connectors and interface circuits are on the Right Front Panel PCB. J31 carries standard MIDI signals to and from the CPU.

Voltage Regulators

The Right Front Panel PCB brings in the single +15V power voltage from the AC adapter and converts it to +5V for digital circuits and +/-8V for the analog circuits. These voltages enter the Engine PCB on J23 (page 5, zone D2). Note that although the analog power signal names are +12V and -12V, the actual voltage level is +8V and approximately -10V.

The various large chips on the Engine PCB require several different power supply voltages: +3.3V (VCC33), +2.5V (VCC25), +1.8V (VCC18), and +1.2V (VCC12). All of these voltages are regulated by integrated linear voltage regulators.

U23: +5V (VCC) is the source voltage for the VCC33 regulator.

Powers the CPU, MARA chip, and most of the other digital circuits.

U24: VCC33 is the source voltage for the VCC25 regulator.

Powers the Delay RAM for the effects processor in MARA.

U25: VCC33 is the source voltage for the VCC18 regulator.

Powers MARA's core logic.

U26: VCC33 is the source voltage for the VCC12 regulator.

Powers the CPU core logic.

Front Panel PCBs Function Summaries

The SP5-8 Front Panel PCBs perform the following functions:

1. ScanPort interface to front panel LEDs
2. ScanPort interface to front panel buttons
3. ScanPort interface to the keyboard
4. MIDI In/Out connector interface to logic level signals
5. DC power entry socket, power switch connector, and voltage regulators
6. USB connector interface
7. LCD contrast voltage adjuster
8. CC Pedal and Switch Pedals interface
9. ScanPort interface to Pitch and Mod wheels
10. ScanPort interface to the Volume control and control sliders
11. Audio differential amplifiers for Left/Right output jacks
12. Amplifier for Headphones jack
13. ScanPort analog multiplexor
14. Audio Muting circuits

The following function summary descriptions reference the SP5-8 Right Front Panel PCB, Rev A, schematic circuit drawings (Chapter 7, pages 7-8 and 7-9) and the SP5-8 Left Front Panel PCB, Rev. A, schematic circuit drawings (Chapter 7, pages 7-10 and 7-11).

In the SP5-8, the main CPU on the Engine PCB also performs scanning of the keyboard, LEDs, and controls. This is done through the ScanPort connector, a simple, Kurzweil standardized, CPU independent interface for scanning.

The Right Front Panel PCB and the Left Front Panel PCB help the Engine PCB communicate with the SP5-8's LEDs, buttons, sliders, Spin knob, power supply, keyboard, wheels, and rear panel connections. Most of the subsystems on the Right Front Panel PCB and Left Front Panel PCB connect to the ScanPort. The Right Front Panel PCB and the Left Front Panel PCB connect via the Control Panel Bridge connectors.

Right and Left Front Panel PCBs

ScanPort interface to front panel LED indicators
(page 1 zone C5–D5)

The 25 LEDs on Right Front Panel PCB are in a 6 column 7 row matrix. The column select shift register (U1) drives the next column each time the ScanPort writes new data into the LED row register (U3). A new scan begins when the ScanPort RES signal is low during a row register write cycle. Scan rate is approximately 100Hz (10mS).

The column select shift register outputs are current boosted by transistors Q1–Q5 and Q23. LEDs light when the column they are connected to is low and the row is high.

The 18 LEDs on the Left Front Panel PCB are in a 5 column 4 row matrix. Their signals are passed through the Control Panel Bridge connector to the Right Front Panel PCB.

ScanPort interface to front panel buttons
(page 1 zone B5)

The 26 buttons on Right Front Panel PCB are in a 6 column 5 row interface. The columns are shared with the LEDS. The status of the rows is driven back to the ScanPort by buffer U4. A pressed button will send back a zero for its row position when its column select line is low. Buttons that may be pressed simultaneously are never on the same row.

The 18 buttons on the Left Front Panel PCB are in a 6 column 3 row matrix. Their signals are passed through the Control Panel Bridge connector to the Right Front Panel PCB.

Right Front Panel PCB

ScanPort interface to the keyboard
(page 2 zone B1–D3)

The keyboard connects to J3 (treble half) and J5 (bass half). Bass is a 10 column by 8 row matrix (40 keys, 80 switches) and treble is a 12 column by 8 row matrix (48 keys, 96 switches). These are combined into a 22 column by 8 row matrix for 88 keys total.

Shift registers U9, U8, U5 drive the columns low one at a time. Buffer U12 transmits the state of the rows back to the ScanPort. Each time a row is read, the column shift registers advance one column. A new scan begins when the ScanPort RES signal is low during a keyboard row read cycle. Scan rate is approximately 4KHz (250uS).

MIDI In/Out connector interface
(page 2 zone D4–D6)

U6 is the MIDI In current loop receiver. Either a PC910 or a 6N138/6N139 may be used. The components around U6 will be different according to the Usage Table. U7-A and U7-B drive the MIDI Out connector current loop.

DC power input jack and voltage regulators
(page 2, zones B4–B6)

J7 receives +15V 1.0A power from the external power adapter. L4 and L5 provide RFI filtering and J6 connects to the power switch.

U11 is a switching regulator which provides +5V at high efficiency for on-board circuits and the Engine PCB. Note the minimum load spec of 0.25A. Typical load is about 1.0A. U10 is a low current linear regulator which supplies +10V to the audio circuits.

-10V for the audio circuits is created by a charge pump (D36, D37, C13, C14) from the high-power 15V rectangular wave produced by the switching regulator. R27 limits surge currents at startup and ripple currents in the charge pump filter. Even though -10V is not strictly regulated, it is very quiet in the audio range and suitable for analog use. Typical voltage range is -8V to -12V.

USB connector interface

(page 2, zone A5)

The USB jack connects directly to the USB Control and Data cables that go to the Engine PCB. Note that the Data cable must be constructed from special USB rated shielded cable for reliable operation in high speed mode.

LCD contrast voltage adjuster
(page 2, zone C5)

VR1 is the front panel contrast control for the LCD. Resistors R25 and R119 set the voltage range and center value so that optimum contrast is achieved near the center of the control's range. Since LCD operating voltages vary by vendor, the values in a particular unit may be different from those in the schematic. Conversely, using a different vendor's LCD may require a change in one or more of these resistors.

Left Front Panel PCB

Switch Pedals and CC Pedal connectors and interface
(page 2, zone C6–D6)

J13 (Sustain) and J18 (Sustentuto) are the switch pedal inputs. The switch pedals close when pressed. Their signals enter the Analog Multiplexor described below.

J12 is the Expression Pedal jack and expects a 3-terminal potentiometer with the wiper on the tip (pin 2). The 5.1V reference voltage is supplied through a current limiter (Q6 and R37) to the ring (pin 3). R45 pulls the wiper up to 5V when no pedal is plugged in thus ensuring stable full volume. The wiper voltage is filtered and overvoltage protected by R44, C31, D39, and D40.

ScanPort interface to Pitch and Mod wheels
(page 1, zone B4–C5)

The pots in the Pitch/Mod wheel assembly turn through only a small part of their rotation range. U20 and associated components amplify the resulting small voltage swing approximately 4X to make a full 0-5V swing for the ScanPort analog multiplexor (described below). Additionally VR3 is used to center the range of the pitch wheel. If the scanner diagnostic reports a center reading less than 120 or more than 136, VR3 should be adjusted to make it as close to 128 as possible.

Volume Control and control sliders
(page 2, zone D2–D6)

These sliders connect between the +5.1V reference voltage and ground. Each wiper is filtered by a 0.1uF capacitor and the resulting voltage passed to the ScanPort analog multiplexor described below.

Audio differential amplifiers for Left/Right output jacks
(page 2, zone A5–C1)

Stereo audio from the Engine PCB comes in as a low-level, unfiltered, balanced signal. U18A (left) and U18B (right) lowpass filters and amplifies this and converts it to single-ended left and right signals with typically 50dB of common-mode rejection. U19A and U19B phase-inverts the single-ended signal then present that plus the non-inverted signal to the output jacks (J14 and J15) as a balanced output signal. Transistors Q7–Q10 mute the outputs during power-up and power-down to prevent clicks. D43, D44, D47–D52 protect against static discharge damage.

Amplifier for Headphones jack
(page 2, zone A1–A2)

U17 amplifies the single-ended left and right audio signals 2X then presents them to J16 for driving headphones. U17 is a special high-current op-amp to better drive low-impedance headphones. Q11 and Q12 mute the phones during power transitions while D53–D56 protect the phones amplifier from static discharge.

ScanPort analog multiplexor
(page 2, zone D2–D4)

There are 8 different sources of analog voltage that are selected one at a time by U15 then passed to the balanced output amplifier U14 which then drives the selected source voltage through the Control Panel Bridge connector to the ScanPort on the Right Front Panel PCB. The balanced outputs are symmetrical around 1/2 of the reference voltage as set by R42, R46, and C32. U16 holds the address of the analog voltage being read during A-to-D conversion by the Engine PCB.

Audio Muting circuits
(page 1 Zone A3–A6)

Each of the 6 muting transistors requires an isolated current source to turn them on and prevent crosstalk and distortion when off. Q13–Q19 provide this function and are driven together by Q20. Q21 and Q22 sense the incoming DC voltage and ensure that muting is activated whenever the incoming voltage is less than approximately 10V. The MUTE signal from the Engine PCB further extends the mute time at power up until the sound generator circuits are initialized and stable.

Automatic Shutdown (ERP Control) PCB

The following function summary descriptions reference the ERP Control PCB, Rev D, schematic circuit drawing (Chapter 7, page 7-12).

Instruments imported into Europe beginning in 2013 must, by law, automatically shut down after a period of inactivity. SP5-8 units exported to Europe implement this by means of a small Automatic Shutdown PCB installed on the rear panel near the DC Power jack. This PCB will interrupt DC power to the Right Front Panel PCB if the unit fails to send any MIDI data for more than approximately four hours. As required by the ERP regulation, this function must be enabled by default from the factory however the user may disable it.

This PCB consists of a timer, a MIDI activity sensor, and a switch transistor. It measures about 30x50mm and is mounted above the MIDI jacks. Two cables connect to the Right Front Panel PCB and one to the power switch. The timer is reset when power is first turned on and whenever a keystroke or sound program change causes MIDI to be sent. The timer may be defeated by pressing the Defeat switch so that it pops out.

Automatic Shutdown (ERP Control) PCB

Chapter 3
Diagnostics

Diagnostic Tests

The following lists the diagnostic tests available for the SP5-8.

- SDRAM Refresh
- MIDI Loopback
- Internal Flash
- MARA Validity
- MARA Delay RAM
- MARA Sound ROM
- Audio Output
- Scanner Diag
- Burn-in Test

Entering Diagnostics

`Run Diagnostics` is one of the available menu options included in the SP5-8 Boot Loader. The following procedure describes entering the boot loader to run the diagnostic tests. The boot loader's other available menu options and their procedures can be found in Chapter 5 beginning on page 5-2.

1. Press and hold the **Shift** button and apply power to the unit. When `Loading...` appears in the display, release the **Shift** button. You should see `SP5_8 System Mode` and the version number momentarily in the display then first available Boot Loader menu option, `Run SP5_8`.
2. Press the **Chan / Param Up** or **Down** button to move through the menu options until the display shows `Run Diagnostics`.
3. Press the **Next** button to enter the diagnostic test menu.
4. The display shows the first test in the diagnostic menu, `SDRAM Refresh`.

Display and Front Panel Buttons

In the Diagnostics menu, the display shows the currently selected test, test modes, actions, and test results.

Press the **Chan / Param Up** or **Down** button to move through the available tests. To select a test, press the **Next** button. Press a **Chan / Param Up** or **Down** button to select the Test Mode: Run Once, Loop or Continuous. Then press the **Next** button to begin the test. While some tests are processing, `Running...` shows in the display.

Some tests have additional test options. In this case, use the **Chan / Param Up** or **Down** button to move through the available test options and press the **Next** button to choose the option and run the test. To return to the previous menu or option, press the **Previous** button.

To return to the Boot Loader, press the **Previous** button.

Test Results

At the completion of an individual test, the display shows the results of the test; the test name and `PASSED` for a passed test or `FAILED` for a failed test. When a test fails, additional lines of test results may scroll across the display. Use the **Chan / Param Down** button to review each line of test results.

Diagnostic Test Modes

Run Once

The Run Once test mode allows you to select and run an individual test. With `Run Once` selected in the display, press the **Next** button to select and run the test once.

At the completion of a test, whether pass or fail, press the **Previous** button to exit the test and return to the Diagnostics menu.

To exit the Diagnostics menu, press the **Previous** button to return to the Boot Loader.

Loop

Loop continuously runs an individual test. The display continuously displays the number of tests performed in the run field (`Run:#`), and displays the number of failed tests performed in the fail field, (`fail:#`).

Loop stops if a failure is detected.

Continuous

Continuous is the same as Loop, but does not stop if a failure is detected. Continuous runs the selected test until you press the **Previous** button.

Description of Tests

SDRAM Refresh

This test verifies the write/read functionality and accuracy of the SDRAM chip (U2) attached to the microprocessor, SH7203 (U1).

A failure of this test indicates a problem with the SDRAM chip or associated circuitry on the Engine PCB.

MIDI Loopback

This test performs a loop-back of the serial port by sending a 23-byte pattern over the external MIDI link. This test requires a MIDI loop (a MIDI cable that connects the MIDI Out jack to MIDI In jack on the SP5-8's rear panel).

If a MIDI cable is not connected between SP5-8's two MIDI jacks, the display scrolls `Connect MIDI OUT to MIDI IN`.

A failure of this test could be caused by failure of the serial port, other MIDI circuitry, or a problem on the Engine PCB.

Internal Flash

This test verifies the manufacturer ID and the size of the NAND Flash installed. The test then writes and reads back one or more blocks not occupied by the file system. This test also indicates if the NAND Flash is formatted or unformatted.

A failure of this test may indicate a problem with the microprocessor (U1), NAND Flash (U3), CPLD (U11), or related circuitry on the Engine PCB.

MARA Validity

Note: Throughout this manual many references are made to the MARA IC. MARA is the name given to the Kurzweil Custom Sound IC.

This test verifies the proper content of certain read-only registers and the read/write accuracy of certain read/write registers on MARA. It also writes and reads back the various register blocks in MARA that are implemented as RAM cells.

A failure of this test may indicate a problem with the microprocessor (U1), MARA (U5), or related circuitry on the Engine PCB.

MARA Delay RAM

This is a write/read test to check the Delay RAM connected to MARA. The Delay RAM test first checks address and databus connectivity and then reports which bits are not functioning to aid troubleshooting.

Error reporting for this test identifies whether the error is likely to have occurred during writing or during reading. Data value mismatch errors are reported in hexadecimal values starting with "0x" followed by 8 hex digits. If the data value that was ReadBack differs greatly from the value Wrote, it could mean there was an address bit error, or one or more of the control signals are bad.

A failure of this test would indicate a problem with the DDR SDRAM (U12), MARA (U5), or the connections between them.

MARA Sound ROM

This test calculates and verifies the checksum of the on-board Sound (Sample) ROM. It also tests the data and address lines from MARA to the Sound ROM. This test may also report errors when the MARA Validity Test fails.

A failure of this test may indicate a problem with the Sound ROM (U13) or its connections to MARA.

Audio Output

Warning: This test produces loud sine and sawtooth waves. Before beginning this test, turn the volume on your sound system down to minimum. During this test, the volume slider on the SP5-8 is disabled.

This is not a test that fails. It is an interactive test for the entire audio chain. However for this test to pass reliably, the MARA Validity, MARA Delay RAM, and MARA Sound ROM tests should pass. MARA plays back sine wave samples from ROM and sawtooth waveforms from Delay RAM. Therefore, MARA and the Delay RAM need to be functioning for this test to produce a clean audio waveform.

Use the **Chan / Param Up** or **Down** button to select `Play Sine Wave` or `Play Sawtooth`, then press the **Next** button to play the selected waveform.

While playing each waveform, use the **Chan / Param Up** or **Down** button to move through a parameter menu for each waveform. Parameters include Output, Amplitude, and Frequency. With any of these parameters shown in the display, press the **Next** button to adjust the parameter. Once the parameter value is shown, use the **Chan / Param Up** or **Down** button to adjust the parameter value. Refer to the following table for each parameter's range of values.

Note: The Output parameter controls which of the left and right Audio Outputs that the audio will play from. Audio always plays from the Headphones output despite how the Output parameter is set.

After adjusting a parameter, press the Previous button below the LCD to return to the menu of parameters. From the menu of parameters, press the Previous button below the LCD to stop playing the waveform and return to the Audio Output menu.

Parameter	Default	Available Values
Waveform	Sine	Sine, Sawtooth
Output	Both	Both, Left, Right
Frequency (Sawtooth)	500Hz	30, 40, 50, 70, 100, 200, 500Hz
Frequency (Sine)	1KHz	30, 40, 50, 70, 100, 200, 500Hz, 1, 2, 5, 10, 15, 20KHz
Amplitude	-20db	-60,-40, -20, -10, 0dB

Scanner DIAG

The Scanner DIAG tests the functionality of the front panel buttons, LEDs , Volume and other controls, keyboard contacts, and pedals.

When Scanner DIAG is selected, the display shows the scanner version, keyboard size and ADC calibration, and keyboard model.

To exit the Scanner DIAG and return to the Diagnostics menu, simultaneously press the **Keypad** and **Enter** buttons.

Scanner DIAG tests

LEDs—Simultaneously press the **Previous** and **Next** buttons, to turn on all LEDs. Press both buttons again to turn off all LEDs.

Front Panel Buttons—To test a button, press any front panel button. The button number and name shows in the display. Most of the 44 buttons on the SP5-8's front panel have LEDs. The LED should turn on each time a button is pressed and turn off when the button is released. The **Previous**, **Next**, **Chan / Param Up and Down**, and **Shift** buttons do not have LEDs. Although the **Shift** button does not have an LED, pressing it tests one of the three LEDs above it. Each time you press the **Shift** button one of the three LEDs will light.

Volume and Control Sliders—Move the volume or one of the five control sliders to test its operation. The control name and numeric value result (current position of the slide potentiometer) shows in the display. The expected test result is—`0` at its lowest position, approximately `128` at its center position, and `255` at its highest position.

Alpha Wheel—To test the Alpha Wheel, turn it clockwise or counterclockwise. Doing so, increases or decreases the value by one. The expected test result when the Spin knob is turned is one of four values–`ENC 0`, `ENC 1`, `ENC 2`, or `ENC 3`.

Pitch and **Mod Wheels**—To test the Pitch or Mod wheel, move the wheel up and down. The wheel name and numeric value result (current position of the wheels) shows in the display. You should see `PW 0` at its lowest position and approximately `PW 255` at its highest position. When you release the Pitch wheel, it returns to center and you should see approximately `PW 128` (normal pitch).

Pedals—The Scanner DIAG for the SW Pedals and the CC Pedal tests and displays the pedal name and whether or not the pedal is open or closed. For example, connect a pedal to the SW Pedal jack and press the pedal, you should see `RP C`. Release the pedal, you should see `RP O.`

Keyboard—To test the keyboard, press and hold any key. The test name (`KY`), key name (i.e. C4) and key number (front or rear contact) are shown in the display. The key name and number are shown twice. The first key number test result is for the front key contact switch and the second is for the rear key contact switch. The two key numbers should always match.

To test Pressure (Aftertouch), press the key harder. The display shows the test result on an additional line below the key test results. With slight pressure applied, you should see approximately `AFT 2`. As you add pressure, the display shows an increasing range of pressure values. The highest expected value should be at least `AFT 246`.

Burn-in Test

Burn-in Test continuously runs the following sequence of tests.

- SDRAM Refresh
- MIDI UART
- Internal Flash
- MARA Validity
- MARA Delay RAM
- MARA Sound ROM

This test requires a MIDI loop (a MIDI cable that connects the MIDI Out jack to MIDI In jack on the SP5-8's rear panel). During Burn-In Loop if a MIDI cable is not connected between SP5-8's two MIDI jacks, the test stalls and the display scrolls `Connect MIDI OUT to MIDI IN`. While running Burn-in Continuous, the test continues but displays a failure.

While running Burn-in Loop, the display shows the total number of tests run and the number of the current test number one through 6. For example, `Running 1/6`. While running Burn-in Continuous, the display shows the total number of tests run and the number of failures detected. For example, `Run:1 Failed:1`.

To exit the Burn-in Test and return to the Diagnostics menu, simultaneously press and hold the **Keypad** and **Enter** buttons, then press the **Previous** button..

Chapter 4
Disassembly/Assembly

Introduction

This chapter contains the procedures and illustrations for the disassembly and reassembly of the SP5-8. There are three sections: Opening the SP5-8, Top Enclosure, and Bottom Enclosure.

Notes, Cautions, Warnings

Please pay special attention to all Notes, Cautions, and Warnings as they not only point out specific instructions.

Cables, Connectors

Most of the cables with connectors are keyed, and therefore cannot be reversed. If a cable's connector is not keyed, the disassembly instructions will caution you.

Throughout the top and bottom enclosures some cable assemblies are bundled together and secured to the enclosure(s) with mounted head cable wraps. These cable wraps have flexible tabs and do not need to be cut; just unwrap the flexible tab to release the bundled cables. Unless otherwise noted, you do not need to unscrew the cable wrap from its position.

Standard plastic tie wraps are also used to bundle cables. Unless the service you are performing requires it, do not cut the tie wraps. Should you need to do so, be sure to install new tie wraps.

In some cases, tape fastens cables to PCBs or the enclosure. When disconnecting cable(s), always peel back the tape from one side so that the tape remains properly positioned.

Required Tools and Materials

- No. 1 Phillips head screwdriver
- No. 2 Phillips head screwdriver
- 7/16" nut driver
- needle-nose pliers
- Small blunt-end tool (Q-Tip, toothpick, etc.)
- Foam or soft surface to protect the control panel, the keyboard and other delicate pieces

Top Enclosure

Opening the SP5-8

Refer to Figure 4-1. Arrows indicate the locations of the enclosure support wall and endcap screws.

1. Position the SP5-8 so that its rear panel portion hangs over the edge of your work surface. This should give you enough room to access the six screws that secure the enclosure support walls.
2. Remove the six enclosure support wall screws.
3. Slide the unit back on your work surface.

Caution: At this point of the procedure, do not remove the endcap screws or the screws located in the "grayed out" portion of the illustration below.

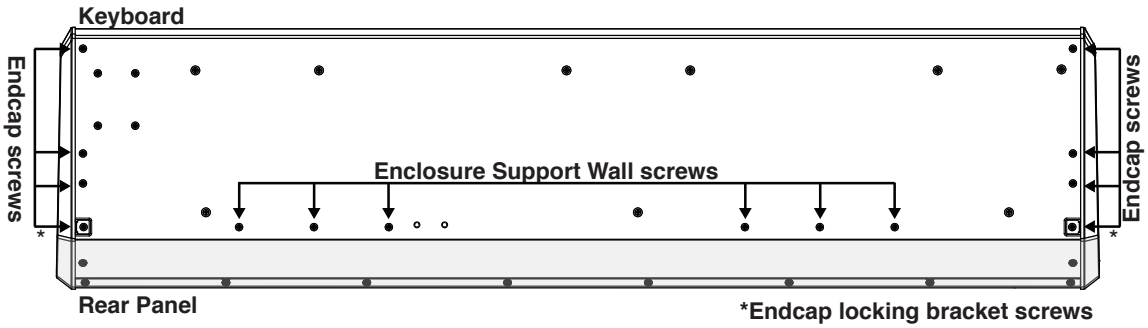

Figure 4-1 SP5-8 bottom enclosure, hardware locations

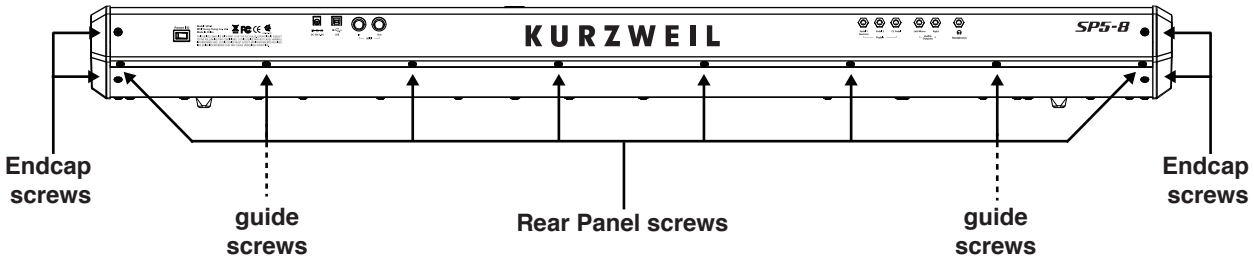

Figure 4-2 SP5-8 rear panel, hardware locations

Removing the Endcaps

1. Move the unit so that one end hangs over the edge of your work surface.
2. Refer to Figure 4-2. Remove the two screws that secure the endcap to the rear panel portion of the SP5-8.

Caution: While performing the following steps, be sure to hold onto the endcap as you remove the screws.

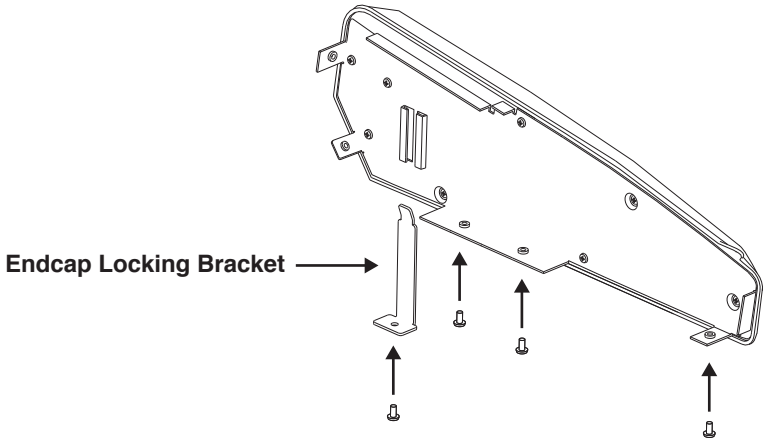

Figure 4-3 SP5-8 endcap

3. Refer to Figure 4-1. Remove the four screws that secure the endcap to the bottom enclosure. One screw (noted with an * in Figure 4-1) secures the endcap locking bracket into the endcap clamping bracket (see Figure 4-4). When you remove the endcap locking bracket screw, it should remain in the endcap. If the bracket is still "locked" into the top enclosure, pull it slightly to unlock it and remove the endcap. Set the endcap safely aside.
4. Slide the SP5-8 back on to your work surface.
5. Repeat Steps 1– 4 for the other endcap.

Removing the Top Enclosure

Warning: Prepare your work surface. This includes placing foam blocks behind the unit. When the top enclosure is removed, place it on the foam blocks to avoid damaging the Alpha Wheel, front panel buttons, sliders, and other components. The following procedure requires enough room behind the rear of the unit to place the top enclosure face down on your work surface.

1. Refer to Figure 4-2. Loosen the two guide screws. You do not need to remove these screws.
2. Remove the remaining six screws that secure the top enclosure to the bottom enclosure.
3. Lift the top enclosure straight up a few inches.

Caution: Table 4-1 lists the cables that connect assemblies from the bottom enclosure to the top enclosure. Unless the service you are performing requires it, you do not need to disconnect these cables

4. Turn the top enclosure over and place it face down on your work surface.

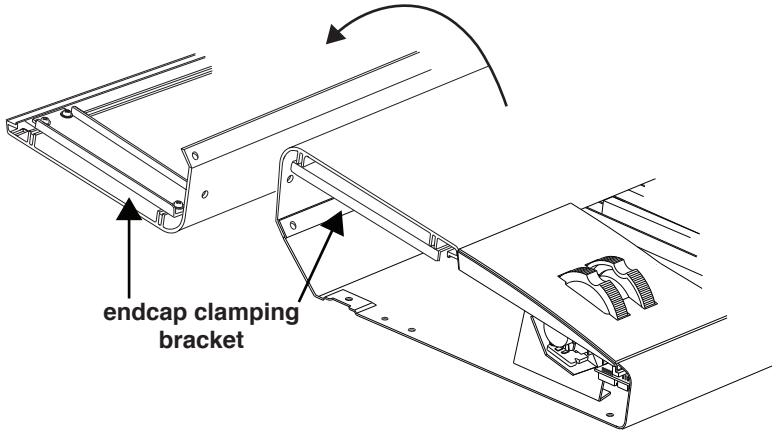

Figure 4-4

Bottom Enclosure	Top Enclosure
Keyboard Bass	Right Front Panel PCB
Keyboard Treble	Right Front Panel PCB
Wheels	Left Front Panel PCB
Key Pressure (white)	Left Front Panel PCB
Key Pressure (black)	Left Front Panel PCB

Table 4-1 Top and bottom enclosure cables

Replacing the Top Enclosure

1. Position the top enclosure behind the bottom enclosure.
2. All cables should be connected and bundled.
3. Lift the top enclosure over the bottom enclosure, then lower it on to the bottom enclosure. Use the guide screws to correctly position the top enclosure.

Caution: Verify that all the cables are properly routed and are not caught between the top and bottom enclosures or the enclosure support wall.

4. Install the six screws in the SP5-8 bottom enclosure (see Figure 4-2).
5. Tighten the guide screws.

Replacing the Endcaps

Warning: The following procedure assumes that you have completed the steps in *Replacing the Top Enclosure*. If you have not completed these steps, do so before continuing.

Note: In addition to the screws on the rear panel, the endcap locking bracket secures the endcap to the top enclosure. When the endcap locking bracket is in position, it rests against a clamping bracket located on the underside of the top enclosure. See 4-4 for the location of the endcap locking bracket.

1. Slide one end of the unit off of your work surface and hold the appropriate endcap and endcap locking bracket in position.
2. Install the endcap locking bracket screw in the bottom enclosure.
3. Install the three remaining endcap screws in the bottom enclosure.
4. Refer to 4-2. Install the two endcap screws in the rear panel.
5. Slide the unit back onto your work surface.
6. Repeat for the other endcap.

Closing the SP5-8

Warning: The following procedure assumes that you have completed the steps in *Replacing the Top Enclosure* and *Replacing the Endcaps*. If you have not completed these steps, do so before continuing.

1. Position the SP5-8 so that its rear panel portion hangs over the edge of your work surface.
2. Install the six enclosure support wall screws.
3. Slide the unit back on your work surface.

Removing the Engine PCB

Figure 4-5 Engine PCB

1. Following Steps 2, 3, and 4 disconnect the cables listed in Table 4-2.

Ref.	Name	Cable Type	Destination
J11	Audio A	shielded wire	Left Front Panel PCB
J31	MIDI/CPU	stranded wire	Right Front Panel PCB
J14	USB Control	stranded wire	Right Front Panel PCB
J26	USB Data	shielded wire	Right Front Panel PCB
J19	Char LCD	flat ribbon	LCD
J7	ScanPort	flat ribbon	Right Front Panel PCB
J23	Power Conn	stranded wire	Right Front Panel PCB

Table 4-2 Engine PCB cables

2. Disconnect stranded wire and shielded wire cables at the following locations:

   J11, J14, J26, and J31.

3. Disconnect the flat ribbon cable from J19 and J7.

Note: If the flat ribbon cables have connectors with tabs to secure them, squeeze the tabs inward and disconnect the cables. If the flat ribbon cables uses locking cable clips, remove the clips and set them safely aside.

4. Disconnect the stranded wire cable from J23.

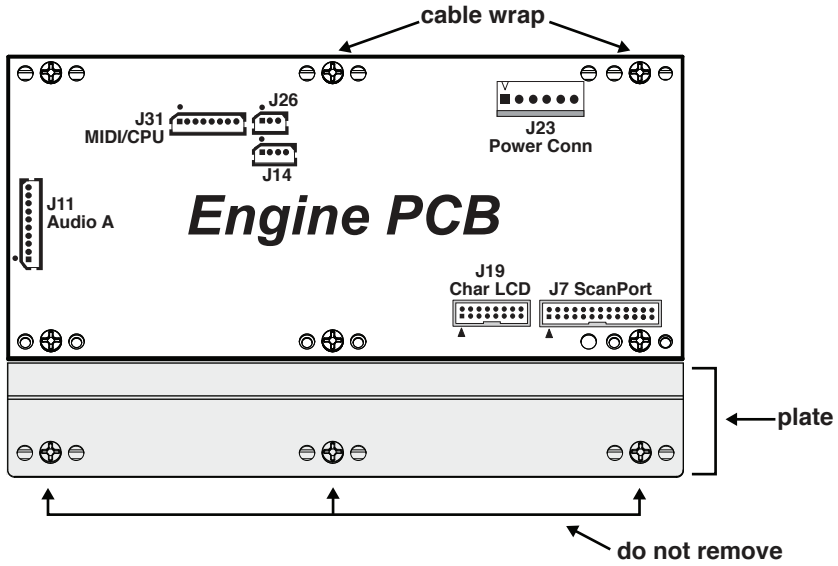

Figure 4-6 Engine PCB connector and hardware locations

5. Unwrap the cable wraps at the locations noted in Figure 4-6.
6. The front edge (normally closest to the keyboard) of the Engine PCB is mounted on plate that is secured to the top enclosure. When you remove the Engine PCB, it is not necessary to remove the plate.
7. Remove the six screws that secure the Engine PCB to the top enclosure and mounting plate. Two of these screws also secure a cable wrap. When you remove the screws, keep the cable wraps with them.
8. Remove the Engine PCB.

Replacing the Engine PCB

1. Place the Engine PCB in position on the top enclosure and mounting plate.
2. Install the six screws to secure it. Be sure to install the cable wraps at the locations noted in Figure 4-6.
3. Connect the stranded wire cable to J23.
4. Connect flat ribbon cable from J1 on the Right Front Panel PCB to J7 on the Engine PCB.
5. Connect flat ribbon cable from the LCD to J19 on the Engine PCB.

Note: If the flat ribbon cables use locking cable clips, be sure to install them.

6. Connect the stranded wire and shielded wire cables in the following order:

   J26, J14, J31, and J11

7. Be sure the cables are properly routed and bundled. Wrap the flexible tab of the cable wraps to secure the cables.

Removing the Right Front Panel PCB

1. Follow the procedure to remove the top enclosure.

Note: Prepare your work surface. Be sure to place the top enclosure on foam or other soft surface to prevent damage or scratches to the rotary and slide potentiometers, switch buttons, the LCD, and front panel.

2. Place the top enclosure face down on your work surface.
3. Remove the three screws that secure the enclosure support wall and set the wall aside.
4. Following Steps 5 and 6, disconnect the cables listed in Table 4-3.

Ref.	Name	Cable Type	Destination
J1	ScanPort	flat ribbon	Engine PCB
J3	Keyboard Treble	flat ribbon	Keyboard Assembly
J4	MIDI	stranded wire	Engine PCB
J5	Keyboard Bass	flat ribbon	Keyboard Assembly
J6	Power Switch	stranded wire	Power Switch Assembly
J8	USB	stranded wire	Engine PCB
J9	DC Power Out	shielded wire	Engine PCB
J10	USB	stranded wire	Engine PCB
J19	Control Panel Bridge	flat ribbon	Left Front Panel PCB

Table 4-3 Right Front Panel PCB cables

Note: If a flat ribbon cable has a connector with tabs to secure it, squeeze the tabs inward and disconnect the cable. If a flat ribbon cable uses a locking cable clip, remove the clip and set it safely aside.

5. Disconnect the flat ribbon cables in the following order:

   J19, Control Panel Bridge; J1, Scan Port; J5, Keyboard Bass; J3, Keyboard Treble.

Note: When you disconnect the Bass and Treble flat ribbon cables, feel free to mark the cables designating B for Bass and T for Treble to avoid reversing the cables when reconnecting.

6. Disconnect the remaining shielded and stranded wire cables in the following order:

   J4, J10, J8, J6, and J9.

7. Unwrap the tab of the cable wrap (see Figure 4-7) so that you can move the bundled cables.
8. Remove the five remaining screws that secure the Right Front Panel PCB to the top enclosure. One screw also secures the cable wrap. Keep the cable wrap with the screw.

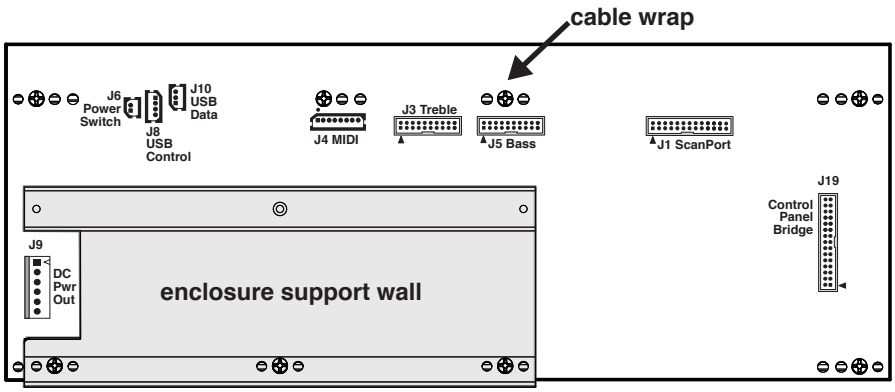

Figure 4-7 SP5-8 Right Front Panel PCB hardware locations

9. Remove the Right Front Panel PCB. The LEDs, switches, Spin knob, and other components are now accessible.

Note: Each switch button has a shroud that positions and locks the switch in place on the Right Front Panel PCB. To remove a switch squeeze the legs (two positions) that secure the shroud to the Right Front Panel PCB. To install the shroud and switch button, position the shroud and switch over its location on the Right Front Panel PCB and apply slight pressure to insert the legs back into place.

Replacing the Right Front Panel PCB

1. Place the Right Front Panel PCB on the top enclosure.
2. Hold the Right Front Panel PCB in position and tilt the top enclosure up to verify that the Spin knob, LCD contrast potentiometer, and switch buttons are positioned correctly and can move freely. Lower the top enclosure.
3. Install the five screws that secure the Right Front Panel PCB to the top enclosure.
4. Connect the shielded and stranded wire cables in the following order:

   J9, J6, J8, J10, and J4.
5. Connect flat ribbon cables in the following order:

   J3, Treble; J5, Bass; J1, ScanPort; J19, Control Panel Bridge.

Note: If the flat ribbon cables use locking cable clips, be sure to install them.

6. Be sure the cables are properly routed and bundled. Wrap the flexible tab of the cable wrap to secure the cables.
7. Position the enclosure support wall over the edge of the Right Front Panel PCB and install the three screws to secure it.

Removing the LCD

The LCD is secured to a bezel connected to the Left Front Panel PCB.

1. Follow the procedure to open the top enclosure.
2. Remove the four screws that secure the LCD to the top enclosure.
   a. If you are replacing the LCD with a new one, continue to Step 3.
   b. If you are removing the LCD to access the Left Front Panel PCB or to perform another operation, lift the LCD up from the bezel and turn it over so that it rests above the Right Front Panel PCB. Be sure to place a piece of anti-static material between the LCD and the Right Front Panel PCB.
3. Disconnect the flat ribbon cable from J19 on the Engine PCB.
4. The flat ribbon cable that connects the LCD to the Engine PCB is bundled with other cables. To remove the LCD, you need to cut the tie wraps and unwrap the tabs of the two cable wraps (one on the Right Front Panel PCB and one on the Engine PCB) to free the cable.
5. Remove the LCD.

Replacing the LCD

1. Place the LCD in position on the LCD bezel.
2. Install the four screws to secure the LCD to the bezel.
3. If the service performed required removing the LCD completely, connect the flat ribbon cable to the to J19 on the Engine PCB.
4. Bundle the flat ribbon cable with the other cables and wrap the flexible tabs of the two cable wraps (one on the Right Front Panel PCB and one on the Engine PCB) to secure them. Replace cut tie wraps.

Removing the Left Front Panel PCB

The Left Front Panel PCB is mounted on the SP5-8 top enclosure. In addition to the screws securing the Left Front Panel PCB to the inside of the top enclosure, there is hardware on the rear panel portion of the top enclosure (securing the rear panel jacks) and slider knobs on the front panel.

From the Rear Panel

1. Position the SP5-8 top enclosure so that the rear panel jacks and connectors are accessible.
2. Remove the nuts and star washers from the audio and pedal jacks.

From the Front Panel

3. Tilt the top enclosure up and remove the knobs from the Master Volume and control sliders. Place the top enclosure back on to your work surface.

Inside the Top Enclosure

4. Removing the Left Front Panel PCB requires removing the LCD. Follow the procedure on page 4-10 and remove the LCD.
5. Following Steps 6–9, disconnect the cables listed in Table 4-2.

Ref.	Name	Cable Type	Destination
J1	Key Pressure (White)	stranded wire	Keyboard Assembly
J2	Key Pressure (Black)	stranded wire	Keyboard Assembly
J7	Audio from Engine	shielded wire	Engine PCB
J20	Wheels	stranded wire	Wheels Assembly
J25	Control Panel Bridge	flat ribbon	Right Front Panel PCB

Table 4-4 Left Front Panel PCB cables

Note: If a flat ribbon cable has a connector with tabs to secure it, squeeze the tabs inward and disconnect the cable. If a flat ribbon cable uses a locking cable clip, remove the clip and set it safely aside.

6. Disconnect the flat ribbon cable from J25.
7. Disconnect the stranded wire cables in the following order:

   J2, J1, and J20.
8. Disconnect the shielded wire cable from J7.

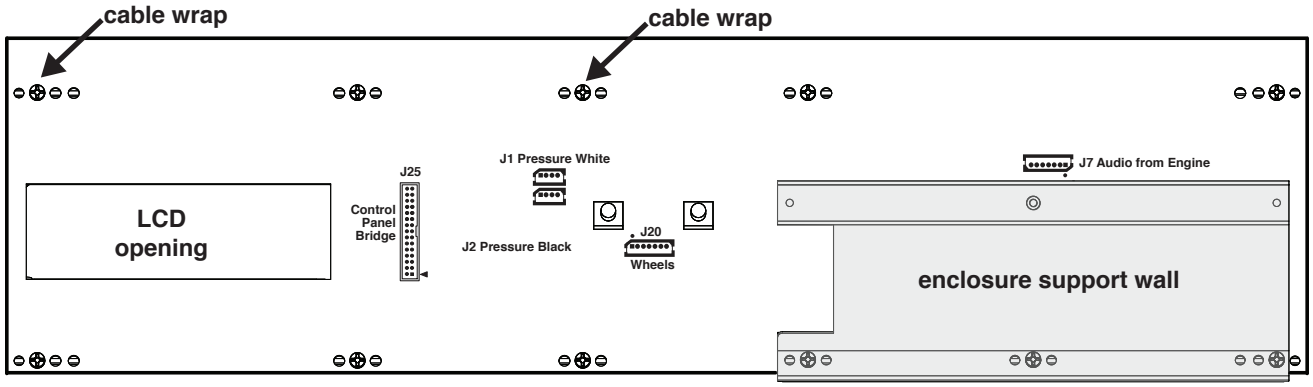

Figure 4-8 Left Front Panel PCB connector and hardware locations

9. Remove the three screws that secure the enclosure support wall and set the wall aside.
10. Remove the eight remaining screws that secure the Left Front Panel PCB to the top enclosure. Two of these screws also secure cable wraps. Keep the cable wraps with the screws.
11. Remove the Left Front Panel PCB. The LEDs, switch buttons, sliders, and other components are now accessible.

Note: Each switch button has a shroud that positions and locks the switch in place on the Left Front Panel PCB. To remove a switch squeeze the legs (two positions) that secure the shroud to the Left Front Panel PCB. To install the shroud and switch button, position the shroud and switch over its location on the Left Front Panel PCB and apply slight pressure to insert the legs back into place.

Replacing the Left Front Panel PCB

Steps 1–8 describe the procedure to secure the Left Front Panel PCB to the inside of the top enclosure. Steps 9–11 describe the procedure to install its hardware on the rear panel and front panel of the top enclosure.

1. Align the mounting holes on the Left Front Panel PCB over their positions on the top enclosure. Be sure the rear panel jacks and connectors are correctly positioned at their openings in the rear panel portion of the top enclosure.
2. Hold the Left Front Panel PCB in position and tilt the top enclosure up to verify that the switch buttons and sliders are positioned correctly and can move freely. Lower the top enclosure.
3. Install the eight screws that secure the Left Front PCB to the top enclosure. Cable wraps should be at two of these locations (see Figure 4-8).
4. Position the enclosure support wall over the edge of the Left Front Panel PCB and install the three screws to secure it.
5. Follow the procedure on page 4-10 to replace the LCD.
6. Connect the flat ribbon cable from J25.

Note: If the flat ribbon cable uses a locking cable clip, be sure to install it.

7. Connect the shielded wire cable from J7. Wrap the flexible tabs (two positions) of the cable wraps to secure this cable.
8. Connect the stranded wire cables in the following order:

   J1, J2, J20.

On the Rear Panel

9. Position the SP5-8 top enclosure so that the rear panel jacks and connectors are accessible.
10. Install the nuts and star washers to secure the audio and pedal jacks.

On the Front Panel

11. Tilt the top enclosure up and install the knobs for the Master Volume and control sliders. Lower the top enclosure back on to your work surface.

Bottom Enclosure

The bottom enclosure includes the Wheels Assembly and Keyboard Assembly.

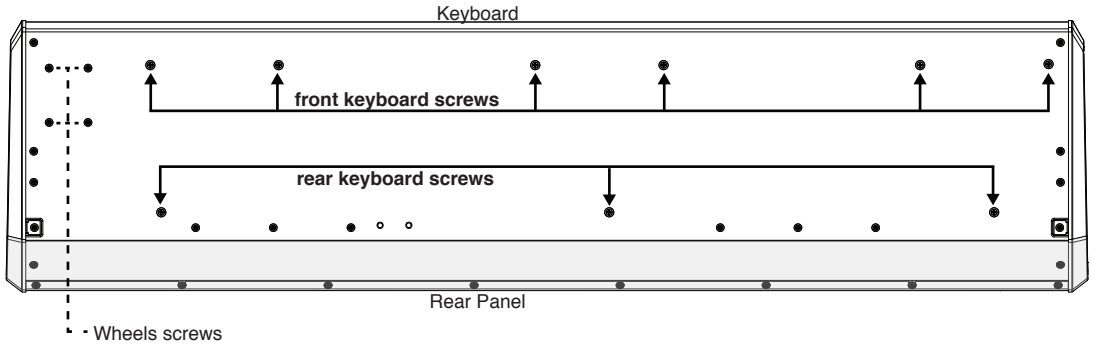

Figure 4-9 Wheels Assembly and Keyboard Assembly hardware locations

Removing the Wheels Assembly

The following procedure assumes that you have completed the instructions on page 4-2 through page 4-4 to open the SP5-8 and remove the top enclosure.

1. Refer to Figure 4-9. Slide the left front corner of the SP5-8 forward off of your work surface to access the four screws securing the Wheels Assembly to the bottom enclosure. Remove the four screws.
2. Slide the unit back onto your work surface.

Note: The stranded wire cable connecting the Mod and Pitch wheels to the Left Front Panel PCB is bundled (using tie wraps) with the Aftertouch stranded wire cables. Tape secures the cable bundle to the bottom enclosure. Tape also secures the Aftertouch flex cables and their connection to the Aftertouch stranded wire cables. Always peel back the tape from one side to free the cable(s).

3. Lift the Wheels Assembly up, approximately two inches. Tape (at two locations) secures the Aftertouch flex cable(s) to the bottom enclosure. Peel back the tape from one side to free the cable(s). Disconnect the Aftertouch flex cables from the Aftertouch stranded wire cables. Be sure to mark one or both cables and connectors to distinguish between the white and black pressure strips.
4. Disconnect the J20 from the Left Front Panel PCB.
5. Remove the tape, cut the tie wraps, and free the Wheels Assembly stranded wire cable.
6. Remove the Wheels Assembly.

Replacing the Wheels Assembly

1. Hold the Wheels Assembly in position over the bottom enclosure.
2. Connect the Aftertouch flex cables to the Aftertouch stranded wire cables.
3. Reapply the tape to the Aftertouch flex cables.
4. Lower the Wheels Assembly into position.
5. Move the unit forward and install the four screws to secure the Wheels Assembly to the bottom enclosure.
6. Slide the unit back onto your work surface.
7. Connect the Wheels Assembly stranded wire cable to J20 on the Left Front Panel PCB.
8. Bundle the Wheels Assembly stranded wire cable and the Aftertouch stranded wire cables with tie wraps then reapply the tape to secure the bundle to the bottom enclosure.

Removing the Keyboard Assembly

The following procedure assumes that you have completed the instructions on page 4-2 through page 4-4 to open the SP5-8 and remove the top enclosure.

1. Follow the procedure to remove the Wheels Assembly.
2. The flat ribbon cables that connect the Keyboard Assembly to the Right Front Panel PCB were disconnected while removing the top enclosure. Before proceeding, verify that the cables are not bundled with other cables and that they can move freely.
3. Refer to Figure 4-9.

Caution: Step 4 instructs you to lift the back edge of the SP5-8 up to access the three screws secure the back edge of the Keyboard Assembly. You should be in position at the front edge of the SP5-8 to provide added support and protection with your body.

4. Slide the SP5-8 toward the middle of your work surface (away from the front edge). While continuously supporting the SP5-8, tilt its the back edge up and remove the three screws securing the back edge of the Keyboard Assembly to the bottom enclosure, then lay the SP5-8 flat on your work surface.
5. Slide the SP5-8 bottom enclosure forward so that the front edge hangs over your work surface and remove the six front keyboard screws. Slide the SP5-8 back onto your work surface.
6. Remove the Keyboard Assembly from the SP5-8 bottom enclosure and place it on your work surface.

Replacing the Keyboard Assembly

Note: Before proceeding, verify that the Keyboard Assembly cables are connected (Bass and Treble flat ribbon cables and the flat flex cables connecting the Keyboard Contact PCBs).

1. Place the Keyboard Assembly on the bottom enclosure. Make sure the Bass and Treble flat ribbon cables are visible.
2. Slide the SP5-8 bottom enclosure forward so that the front edge hangs over your work surface. Install the six front screws. Slide the SP5-8 back on to your work surface.

Caution: Step 3 instructs you to lift the back edge of the SP5-8 up to access the three screws that secure the back edge of the Keyboard Assembly. You should be in position at the front edge of the SP5-8 to provide added support and protection with your body.

3. Slide the SP5-8 toward the middle of your work surface (away from the front edge). While continuously supporting the SP5-8, tilt the SP5-8 up and install the three screws securing the back edge of the Keyboard Assembly to the bottom enclosure, then lay the SP5-8 flat on your work surface.
4. If the service to the SP5-8 is complete, follow the procedure on page 4-3, Replacing the Top Enclosure.

Removing Keys

The following procedure assumes that you have completed the instructions on page 4-2 through page 4-4 to open the SP5-8 and remove the top enclosure.

1. Follow the procedure to remove the Keyboard Assembly.
2. The following diagrams show the outline of the natural and sharp keys and illustrate how their design interacts with the keyboard chassis and Key Contact PCBs.

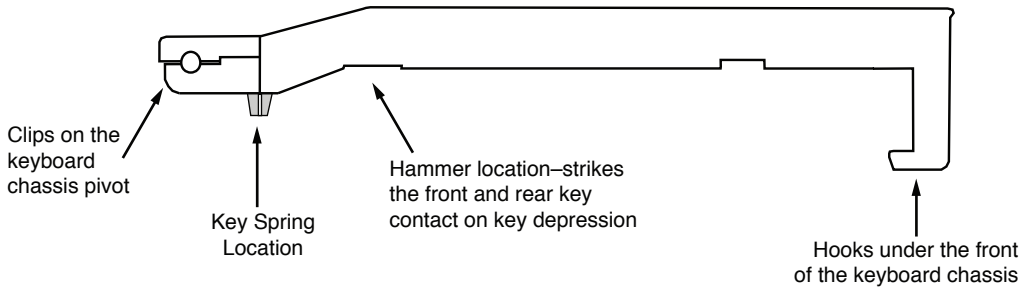

Figure 4-10 Natural/white key

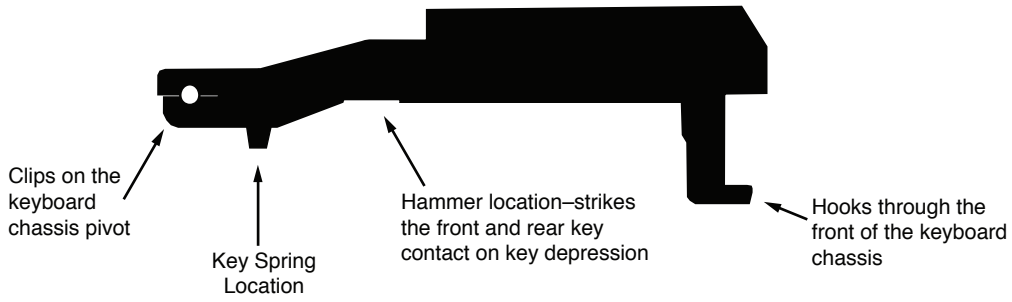

Figure 4-11 Sharp/black key

3. Insert a small pair of needle-nose pliers between the key clips and the chassis pivot.
4. Use the needle-nose pliers to spread the clips outward. The key pops up when it clears the pivot.

Caution: Some keys pop up quicker than others. Make sure the Keyboard Assembly is positioned so that a key does not fall off of your work surface.

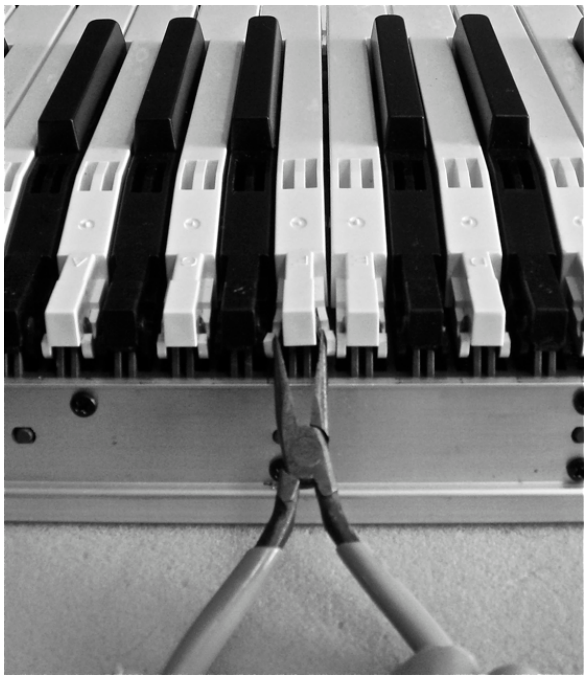

Figure 4-12 Key clips

5. The key should now be free of the pivot. Be sure the key is free from the keyboard chassis before removing the key.

To remove a natural key, lift the key up slightly, then forward. The front edge of the key hooks under the keyboard chassis.

To remove a sharp key, lift the key up slightly, then forward. The front edge of the key hooks through the keyboard chassis.

6. Remove the key.

Caution: Each key has a key spring (silver springs for natural keys and black springs for sharp keys). The key spring slips over a post on the keyboard chassis and is held in place when the key is installed. When you remove a key, the key spring is free. Leave the spring in its position on the keyboard chassis or set it safely aside.

Replacing Keys

1. Verify the placement of the key spring on the keyboard chassis.
2. If you are replacing a natural key, hook the front end of the key under the keyboard chassis. For a sharp key, hook the front end through the keyboard chassis.
3. Lower the key into position. Make certain the key post is correctly positioned in the key spring.
4. Align the pivot with the hole at the rear of the key. Apply pressure to the back of the key. The key clips separate and clip on the pivot.

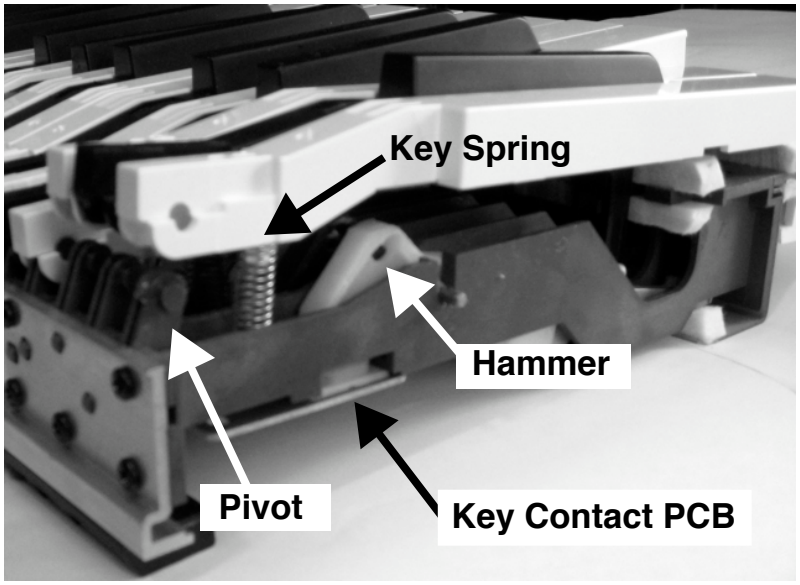

Figure 4-13 Key Spring and pivot locations

Keyboard Contact PCBs

The SP5-8 Keyboard Assembly has three Keyboard Contact PCBs: Lo (A0 to E3), Mid (F3-C6), and Hi (C#6 to C8).

1. Place the keyboard upside down on a flat soft surface. Be sure that the keys are resting on a soft surface to avoid scratching or other damage. The Lo, Mid, and Hi Contact PCBs are now visible.

Removing the Lo Contact PCB

1. Disconnect the flat flex cable that connects the Lo and Mid Contact PCBs. Gently tug on the flat flex cable to disconnect it.
2. Remove the 11 screws that secure the Lo Contact PCB to the keyboard chassis.
3. There is a small flat plate connecting the Lo and Mid Contact PCBs. Two screws secure it. The screw on the Lo side is one of the 11 screws described in Step 2. The second screw is on the Mid Contact PCB. Remove the screw from the plate on the Mid Contact PCB and set the plate safely aside.
4. Carefully lift and remove the Lo Contact PCB.

Replacing the Lo Contact PCB

1. Position the Lo Contact PCB over the keyboard chassis. The flat flex cable connector and the keyboard diodes should be positioned closest to the back of the keyboard chassis.

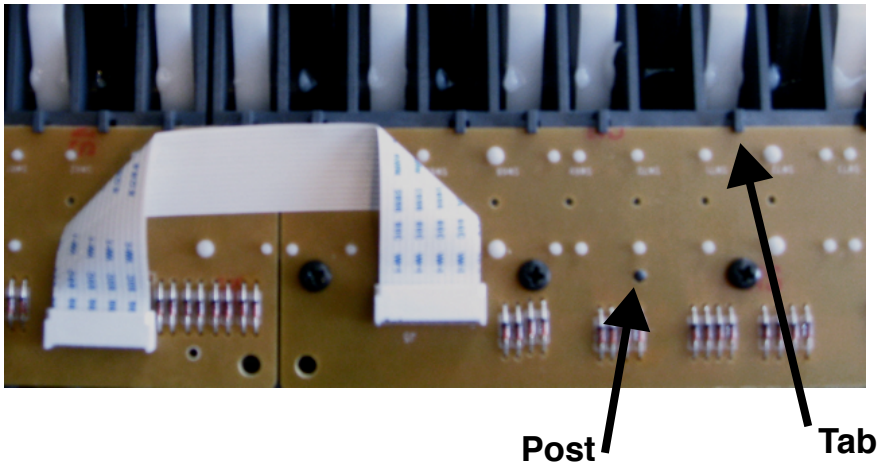

Figure 4-14 Keyboard chassis tabs and posts

2. Refer to Figure 4-21. In addition to the 11 screws that secure the Lo Contact PCB to the keyboard chassis, there are tabs positioned along the length of the keyboard chassis and alignment posts that help secure and correctly position the Lo Contact PCB.
   c. Angle the PCB so that its front edge is positioned under the tabs and align the screw holes in the PCB over their location on the keyboard chassis.

d. Apply slight pressure to the back end of the Lo Contact PCB. Doing so, lowers the PCB so that it is laying flat on the keyboard chassis.

e. Make sure the alignment posts are positioned through the holes provided for them on the Lo Contact PCB.

Caution: If you need to reposition the PCB, be careful you do not dislodge or damage the keyboard contacts.

f. Install the 11 screws to secure the Lo Contact PCB to the keyboard chassis. While doing so, include the small flat plate that connects the Lo and Mid Contact PCBs. Install the screw to secure the small flat plate on the Mid Contact PCB.

3. Insert the flat flex cable from the Mid Contact PCB into the connector on the Lo Contact PCB.

Removing the Mid Contact PCB

1. Disconnect the flat flex cables that connect the Mid Contact PCB to the Lo and Hi Contact PCBs. Gently tug on the flat flex cables to disconnect them.
2. Disconnect the flat ribbon cables from J6 (Bass) and J7 (Treble) on the Mid Contact PCB. Should the flat ribbon cables have tape securing them to the contact PCB, peel back the tape from one side so that the tape remains properly positioned.
3. Remove the ten screws that secure the Mid Contact PCB to the keyboard chassis.
4. There is a small flat plate connecting the Mid to the Lo Contact PCBs. Two screws secure it. The screw on the Mid side is one of the ten screws described in Step 3. The second screw is on the Lo Contact PCB. Remove the screw from the plate on the Lo Contact PCB and set the plate safely aside.
5. Carefully lift and remove the Mid Contact PCB.

Replacing the Mid Contact PCB

1. Position the Mid Contact PCB over the keyboard chassis. The flat flex cable connector and the keyboard diodes should be positioned closest to the back of the keyboard chassis.
2. Refer to Figure 4-21. In addition to the ten screws that secure the Mid Contact PCB to the keyboard chassis, there are tabs and alignment posts on the keyboard chassis that help secure and correctly position the Mid Contact PCB.

   a. Angle the PCB so that its front edge is positioned under the tabs and align the screw holes in the PCB over their location on the keyboard chassis.

   b. Apply slight pressure to the back end of the Mid Contact PCB. Doing so, lowers the PCB so that it is laying flat on the keyboard chassis.

   c. Make sure the alignment posts are positioned through the holes provided for them on the Mid Contact PCB.

Caution: If you need to reposition the PCB, be careful you do not dislodge or damage the keyboard contacts.

d. Install the ten screws to secure the Mid Contact PCB to the keyboard chassis. While doing so, include the small flat plate that connects the Lo and Mid Contact PCBs. Install the screw to secure the small flat plate on the Lo Contact PCB.

3. Insert the flat flex cable from the Lo Contact PCB into the connector on the Mid Contact PCB.
4. Connect the flat ribbon cables; Bass (J6) and Treble (J7). Be sure to reapply the tape to secure the ribbon cable(s).

Note: The Bass flat ribbon cable is longer.

Removing the Hi Contact PCB

1. Disconnect the flat flex cable that connects the Mid and Hi Contact PCBs. Gently tug on the flat flex cable to disconnect it.
2. Remove the eight screws that secure the Hi Contact PCB to the keyboard chassis.
3. Carefully lift and remove the Hi Contact PCB.

Replacing the Hi Contact PCB

1. Position the Hi Contact PCB over the keyboard chassis. The flat flex cable connector and the keyboard diodes should be positioned closest to the back of the keyboard chassis.
2. Refer to Figure 4-21. In addition to the eight screws that secure the Hi Contact PCB to the keyboard chassis, there are tabs and alignment posts on the keyboard chassis that help secure and correctly position the Hi Contact PCB.
   a. Angle the PCB so that its front edge is positioned under the tabs and align the screw holes in the PCB over their location on the keyboard chassis.
   b. Apply slight pressure to the back end of the Hi Contact PCB. Doing so, lowers the PCB so that it is laying flat on the keyboard chassis.
   c. Make sure the alignment posts are positioned through the holes provided for them on the Hi Contact PCB.

Caution: If you need to reposition the PCB, be careful you do not dislodge or damage the keyboard contacts.

3. Install the eight screws to secure the Hi Contact PCB to the keyboard chassis.
4. Insert the flat flex cable from the Mid Contact PCB into the connector on the Hi Contact PCB.

Removing the Keyboard Contact Strips

1. Place the keyboard upside down on a flat soft surface. Be sure that the keys are resting on a soft surface to avoid scratching or other damage.
2. Follow the procedure to remove the Keyboard Contact Board(s).
3. Examine the keyboard contact strips and look at the design of an individual contact. The top portion of the contact has two indentations. One indentation is deeper than the other. When replacing the keyboard contact strips, the deeper indentation is positioned closest to the edge of the contact PCB.
4. The keyboard contact strips have mounting pegs that secure the contact strips to the Keyboard Contact PCBs.
5. To remove a keyboard contact strip, gently lift and free the strip from its position. Be careful not to rip or damage any contact in the process.

Replacing the Keyboard Contact Strips

1. Position the contact strip on the Keyboard Contact PCB that you are servicing.

Note: Be sure that the deeper indentation is positioned closest to the edge of the contact PCB.

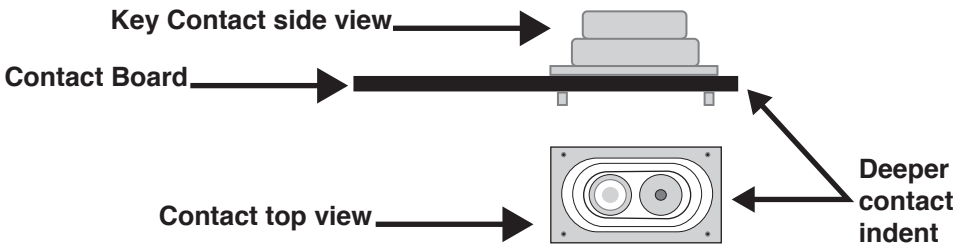

Figure 4-15 Key Contacts

2. Line up the contact strip mounting pegs with their respective mounting holes on the Keyboard Contact PCB.
3. Using a small blunt-end tool (Q-Tip, toothpick, etc.), gently push the mounting pegs through the holes. Do not use too much force or use a tool that can poke a hole through the mounting pegs. However, be sure that the mounting pegs are installed through the holes and the contact strip is flat against the Keyboard Contact PCB at each peg location.

Chapter 5
Troubleshooting & Maintenance

Introduction

Surface-Mount Devices

The removal and replacement of surface-mount devices requires training and proper equipment. If you do not have the training or equipment to remove and replace surface-mount devices, contact the Service Department to order a replacement PCB. International service technicians should contact their appropriate Young Chang Distributor.

Cables, Connectors

Most of the cables with connectors are keyed, and therefore cannot be reversed. If a cable's connector is not keyed, the disassembly instructions will caution you.

Throughout the top and bottom enclosures some cable assemblies are bundled together and secured to the enclosure(s) with mounted head cable wraps. These cable wraps have flexible tabs and do not need to be cut; just unwrap the flexible tab to release the bundled cables. Unless otherwise noted, you do not need to unscrew the cable wrap from its position.

Standard plastic tie wraps are also used to bundle cables. Unless the service you are performing requires it, do not cut the tie wraps. Should you need to do so, be sure to install new tie wraps.

In some cases, tape fastens cables to PCBs or the enclosure. When disconnecting cable(s), always peel back the tape from one side so that the tape remains properly positioned.

Required Tools and Materials

- No. 1 Phillips head screwdriver
- No. 2 Phillips head screwdriver
- 7/16" nut driver
- needle-nose pliers
- Small blunt-end tool (Q-Tip, toothpick, etc.)
- Foam or soft surface to protect the front panel, the keyboard and other delicate pieces

Boot Loader

Use the SP5-8 Boot Loader to enter Diagnostics or perform a hard reset to the unit. You can also install operating system updates and objects into Flash memory.

Entering the Boot Loader

Press and hold the **Shift** button and apply power to the unit. When `Loading...` appears in the display, release the **Shift** button. You should see `SP5_8 System Mode` and the version number momentarily in the display then first available Boot Loader menu option, `Run SP5_8`. Press the **Chan / Param Up** or **Chan / Param Down** button to move through the available menu options, then press the **Next** button to select it.

The following is a brief description of the five available menu options in the SP5-8 Boot Loader.

Run SP5-8—Exits the Boot Loader and returns the unit to normal operation.

Update Software—Select this to install new system software and objects.

Run Diagnostics—Enters the diagnostic test menu. For a complete list of tests and the procedure to execute the diagnostic tests, refer to Chapter 3, Diagnostics.

System Reset—Clears user memory and restores the unit to factory default settings.

File Utilities—Use this to save and restore SP5-8 files, or execute an SP5-8 image via USB.

Resets

There are three ways to perform a hard reset to the SP5-8.

1. While holding down the C8 key, apply power to the SP5-8. Release the key when `Resetting...` appears in the display.
2. Press the **Global** button. Press the **Chan / Param Up** or **Chan / Param Down** button to move through the available parameters until you see `Hard Reset?` in the display. Press the **Next** button. The display shows `Confirm?`.

   To erase all user objects and restore the unit to factory settings, press the **Next** button to confirm. To cancel the Hard Reset, press **Previous** or any other function button.
3. **Boot Loader—**When `Loading...` appears in the display, release the **Shift** button. You should see `SP5_8 System Mode` and the version number momentarily in the display then first available Boot Loader menu option, `Run SP5_8`.

   Press the **Chan / Param Up** or **Chan / Param Down** button to move through the available menu options until `System Reset` is in the display, then press the **Next** button to select it. The display prompts `Delete all user objects?`, press the **Next** button. When complete, the display shows `Done`.

Software Updates

1. Go to www.kurzweil.com and follow the links to download the latest software version to your computer desktop.

Note: The Operating System and Object files are combined in one file type (.KUF).

2. Connect a USB cable from a computer to the USB port on the SP5-8 rear panel.
3. When `Loading...` appears in the display, release the **Shift** button.
4. You should see `Run SP5_8` in the display.
5. Check the computer desktop and verify that the SP5-8 USB device/window is present. (This should appear on the desktop as an icon or window.)
6. Press the **Param / Chan Down** button. The display shows, `Update software`.
7. Press the **Next** button. The display shows `Update`. Press the **Next** button again.
8. The display shows the following message:

   `Copy file To drive and press OK to continue`.

9. Drag and drop the update file(s) directly to the SP5-8 icon on the computer desktop.

Note: Be sure to always read the downloaded release notes and installation instructions in case they have changed since this manual was written.

10. Press the **Next** button on the SP5-8 to begin the update. The display shows:

    `Updating...`.

11. When the update is complete, the display shows: `Done`.
12. Unmount or "safely remove" the SP5-8 icon from your computer.
13. Turn the SP5-8 off, then on again to test the software updates.

Power Problems

Dead: LCD, LEDs not lit

Before opening the unit, verify the following:

1. The AC outlet is supplying power.
2. The AC cord is good and properly connected to the unit.
3. Check the power switch, DC power jack, and DC power adapter. The adapter rating must be 15VDC, 1.0A minimum, center pin +.
4. Open the unit. Follow the procedures on pages 4-2 through 4-3 to remove the top enclosure.
5. Refer to the Right Front Panel PCB schematics and check all supply voltages.

Audio Problems

No Audio

1. Try playing a demo to rule out a keyboard problem. Press the **Demo** buttons (simultaneously press the **User** and **All** category buttons).
2. Follow the instructions outlined in Chapter 3 Diagnostics and run the Scanner DIAG tests to check the volume control operation.
3. If a volume pedal is plugged in, make sure it is not set to minimum. Or, power-off, unplug the volume pedal, them power on again.
4. Refer to the Interconnect Diagram. Check the flat ribbon cable from J11 on the Engine PCB to J7 on the Left Front Panel PCB.
5. Check the solder connections at the connectors.
6. Refer to the Engine PCB schematics, page 7-6, and check the signal activity on the DAC, U15.
7. Trace the signal path from the Engine PCB through the Left Front Panel PCB to the audio jacks.

Front Panel Problems

LCD not lit, LEDs are lit

1. If there is audio and the keyboard plays, check LCD contrast adjustment located on the rear panel. Turn the pot back and forth to see if there is any change.
2. Refer to the Interconnect Diagram.
3. Check the ribbon cable from the LCD to J19 on the Engine PCB.
4. Disconnect and reseat the cable connectors.
5. Check the solder connections at the connectors.
6. Trace the signal path.
7. Find and replace bad component(s) or order a PCB replacement.

LCD, LEDs not lit, buttons, or controllers not working

1. Run the Scanner DIAG tests. If the tests pass, perform a hard reset.
2. Refer to the Interconnect Diagram.
3. Check all related cables. Disconnect and reseat the cables.
4. Check the solder connections at the connectors.
5. Check the Control Panel Bridge ribbon cable from the Right Front Panel PCB to the Left Front Panel PCB.
6. Check the ribbon cable from the Right Front Panel PCB, J1, to the Engine PCB, J7.
7. Trace the signal path from the connector on the Engine PCB to the Right Front Panel PCB.
8. Find and replace bad component(s) or order a PCB replacement.

Keyboard Problems

Dead Keyboard

1. Follow the instructions outlined in Chapter 3 Diagnostics and run the Scanner DIAG tests. If the tests pass, perform a hard reset.
2. Check the flat ribbon cables connecting the Keyboard Bass and Treble Contact PCBs to the Right Front Panel PCB, locations J5 and J3 respectively. Be certain that the cables are not loose or damaged.
3. Disconnect and re-seat the cables.
4. Check the flat ribbon cable connectors at location J1 on the Right Front Panel PCB and J7 on the Engine PCB.
5. Trace the signal path.
6. Find and replace bad component(s) or order a PCB replacement.

Dead Note(s) or no velocity sensitivity

One or More in a Section

1. Check the keyboard cables for proper seating and damage. Make sure they are not pinched under the keyboard or elsewhere creating a short circuit.
2. Remove related contact PCB.
3. Check the keyboard contact strip for dirt, damage or wearing. Clean dirty contacts with denatured alcohol. Replace a damaged or worn keyboard contact strip.
4. Install keyboard contact strip.
5. If section is still dead, remove strip and check contact PCB for shorts, cold solder joints, etc.
6. Find and replace bad component(s) or order a replacement PCB.

Interconnect Diagram

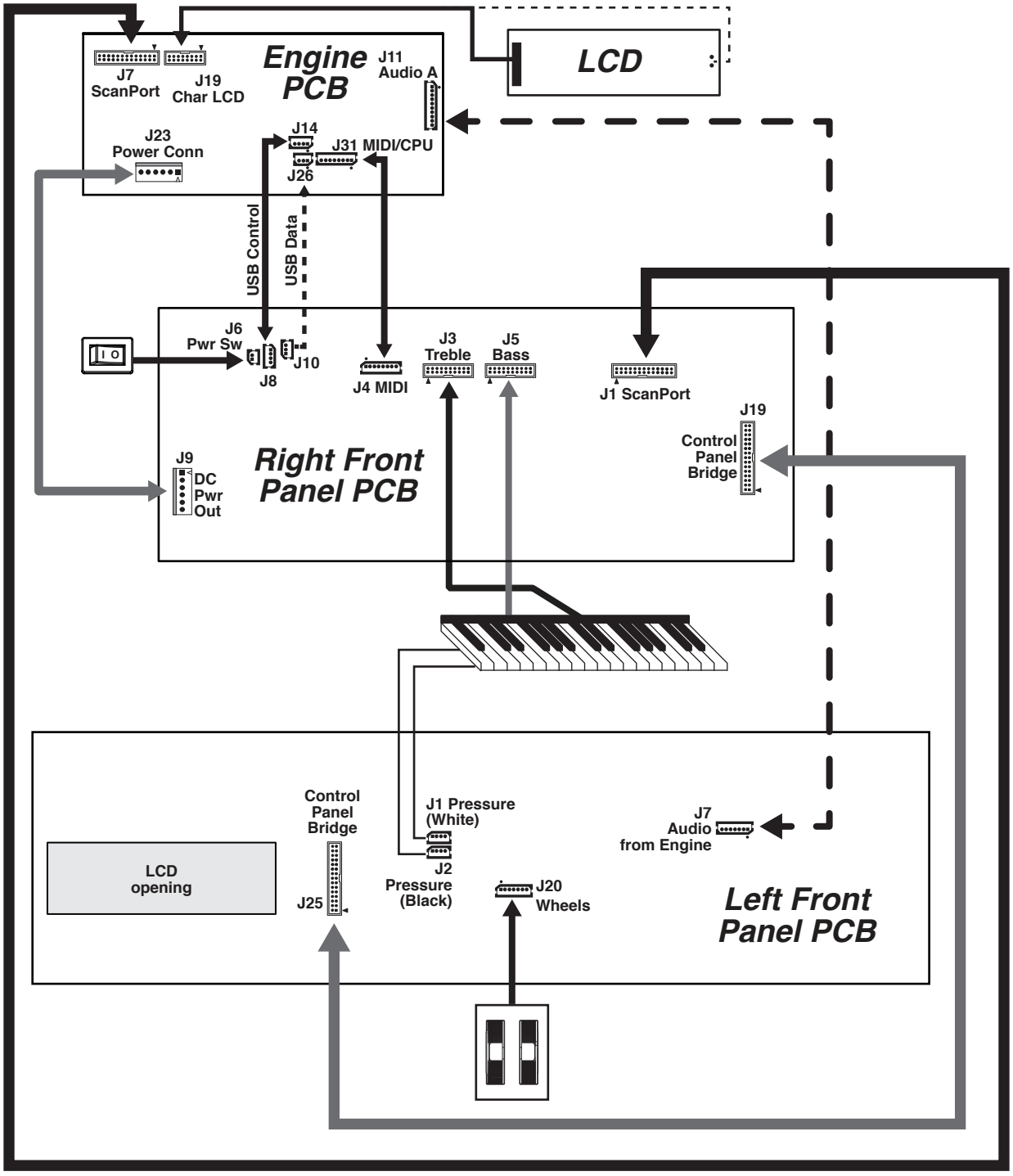

Interconnect Diagram

Chapter 6
Replacement Parts

Printed Circuit Boards and Assemblies

Part No.	Description
101010643001	Engine PCB
1010302970	Right Front Panel PCB
1010302990	Left Front Panel PCB
1010600770	Power Switch Assembly
101040072001	LCD Assembly
1010900760	Automatic Shutdown (ERP Control) PCB
6990001390	Keyboard Assembly 88 LK40GH+AFT
N093LK10L6	LK Key Contact PCB LO
N093LKW0M7	LK Key Contact PCB MID
N093LKW0H8	LK Key Contact PCB HI

Keyboard Assembly

Part No.	Description
N093LKW005	Key Contact Strip (12 positions)
N093LKW011	Key Natural Low A
N093LKW012	Key Natural Hi C
N093LKW013	Key Sharp
N093LKW014	Key Natural A
N093LKW015	Key Natural B
N093LKW016	Key Natural C
N093LKW017	Key Natural D
N093LKW018	Key Natural E
N093LKW019	Key Natural F
N093LKW020	Key Natural G
N093LK2030	LK Sharp/Black Hammer
N093LK2031	LK Natural/White Hammer

Right Front Panel PCB

Part No.	Description	Qty.	Reference Destination
208010029	Cap Spinknob	1	For SW44
215010069	Switch button bracket	26	For SW13–35, SW41–SW43
6110100570	Spinknob	1	SW44
	LED Blue (KB3)	1	D58
6190100460	LED	24	D20–D34, D59–D67
620010006	Jack DC power entry	1	J7
620030002	Jack MIDI	1	J2, J12
620050008	Jack USB	1	J11
629020319	Switch button (7, 8, 9, 0)	1	SW19, SW23, SW25, SW26
629020320	Switch button (4, 5, 6, JKL)	1	SW18, SW20, SW21, SW24
629020321	Switch button (1, 2, 3, ABC)	1	SW13–SW16
629020327	Switch button (DEF, GHI, Space, Insert)	1	SW17, SW28, SW29, SW30
629020328	Switch button (TUV, WXYZ, Kepad, Enter)	1	SW27, SW31, SW35, SW43
629020329	Switch button (MNO, PQRS, +/-, Delete)	1	SW22, SW32, SW33, SW34
629020335	Switch button (▲)	2	SW41, SW42

Left Front Panel PCB

Part No.	Description	Qty.	Reference Destination
207010017	Knob Slider (Master Volume)	1	For VR2
207010025	Knob Slider (Control sliders)	5	For VR5–VR9
215010069	Switch button bracket	18	For SW0–SW12, SW36–SW40
6110100460	Potentiometer Slider	6	VR2, VR5–VR9
6190100460	LED	18	D0-D17
620020011	Jack Stereo (Audio, Headphones, Pedal)	2	J12 J13 J14 J15 J16 J18
629020317	Switch button (4, blank w/LED window)	3	SW1–SW4; SW37, SW5, SW6, SW11; SW39, SW9, SW10, SW7
629020318	Switch button (single, blank w/LED window)	3	SW0, SW8, SW12
629020326	Switch button (single, blank)	1	SW36
629020333	Switch button (-)	1	SW40
629020334	Switch button (+)	1	SW38

Miscellaneous

Part No.	Description	Qty.	Reference Destination
102990080	Right Endcap Assy	1	
102990081	Left Endcap Assy	1	
6380101350	SMPS Adaptor	1	

Chapter 7
Schematics

Description	Page No.
Engine PCB—SH7203 CPU, Memory, and Debug UART Header (1 of 5)	page 7-3
Engine PCB—MARA (2 of 5)	page 7-4
Engine PCB—MARA Clock, Delay Memory, ScanPort, CPLD (3 of 5)	page 7-5
Engine PCB—Sound ROM, LCD INTF, Audio Outputs, USB I/F (4 of 5)	page 7-6
Engine PCB—Power Circuitry, Test Headers , Reset (5 of 5)	page 7-7
Front Panel Right PCB—Button, LED (1 of 2)	page 7-8
Front Panel Right PCB (2 of 2)	page 7-9
Front Panel Left PCB (1 of 2))	page 7-10
Front Panel Left PCB (2 of 2)	page 7-11
Automatic Shutdown (ERP Control) PCB	page 7-12

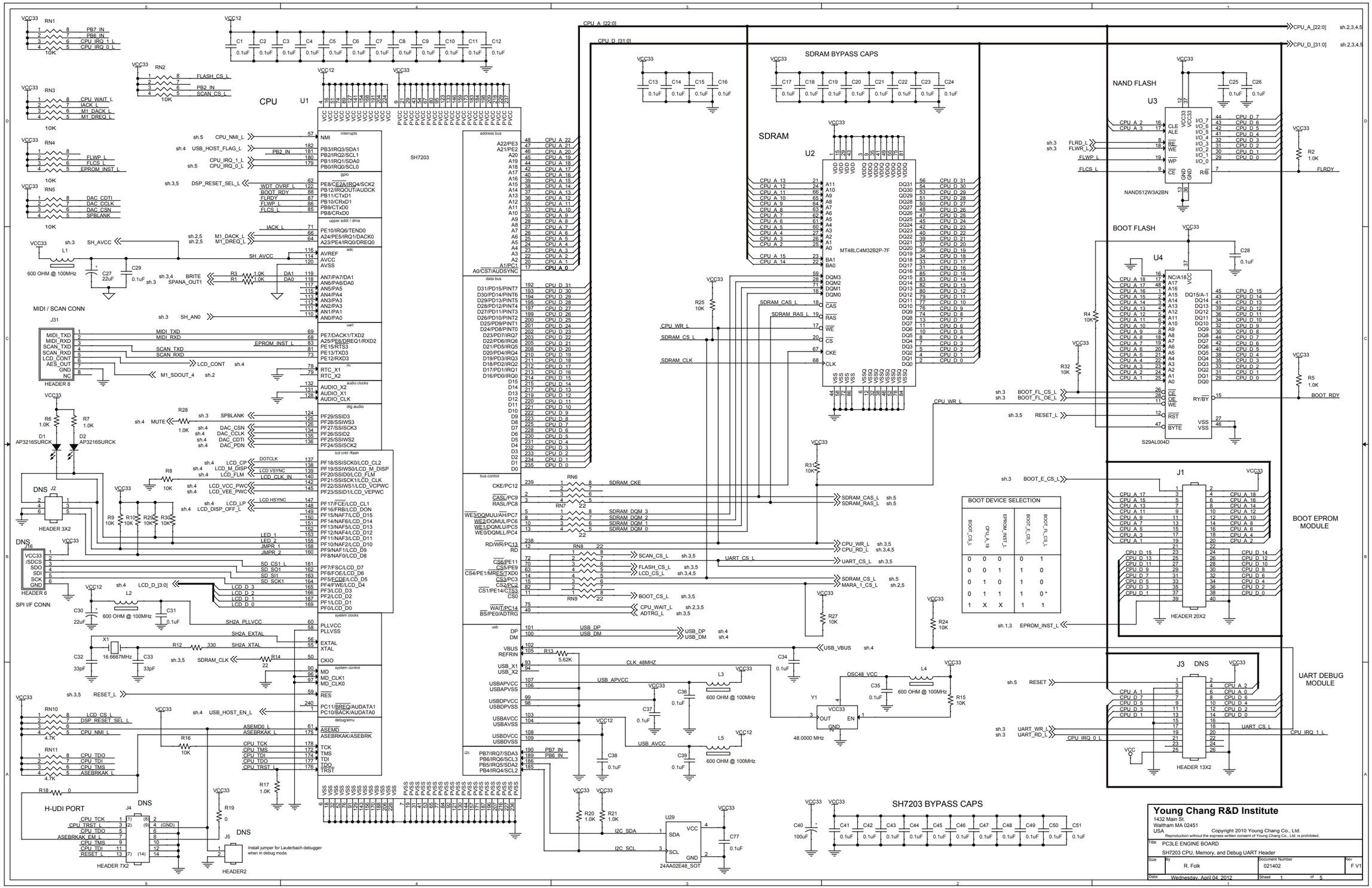
CPU
U1
SH7203
SDRAM BYPASS CAPS
SDRAM
U2
MT48LC4M32B2P-7F
NAND FLASH
U3
NAND512W3A2BN
BOOT FLASH
U4
S29AL004D
MIDI / SCAN CONN
J31
HEADER 8
SPI I/F CONN
HEADER 6
HEADER 3X2
H-UDI PORT
J4
HEADER 7X2
J5
HEADER2
Install jumper for Lauterbach debugger when in debug mode.
BOOT DEVICE SELECTION
BOOT_CS_L
CPU_A_19
EPROM_INST_L
BOOT_E_CS_L
BOOT_FL_CS_L
BOOT EPROM MODULE
J1
HEADER 20X2
UART DEBUG MODULE
J3
HEADER 13X2
SH7203 BYPASS CAPS
U29
24AA02E48_SOT
Y1
48.0000 MHz
Young Chang R&D Institute
1432 Main St.
Waltham MA 02451
USA
Copyright 2010 Young Chang Co., Ltd.
Reproduction without the express written consent of Young Chang Co., Ltd. is prohibited.
Title PC3LE ENGINE BOARD
SH7203 CPU, Memory, and Debug UART Header
Size
By R. Folk
Document Number 021402
Rev F V1
Date: Wednesday, April 04, 2012
Sheet 1 of 5

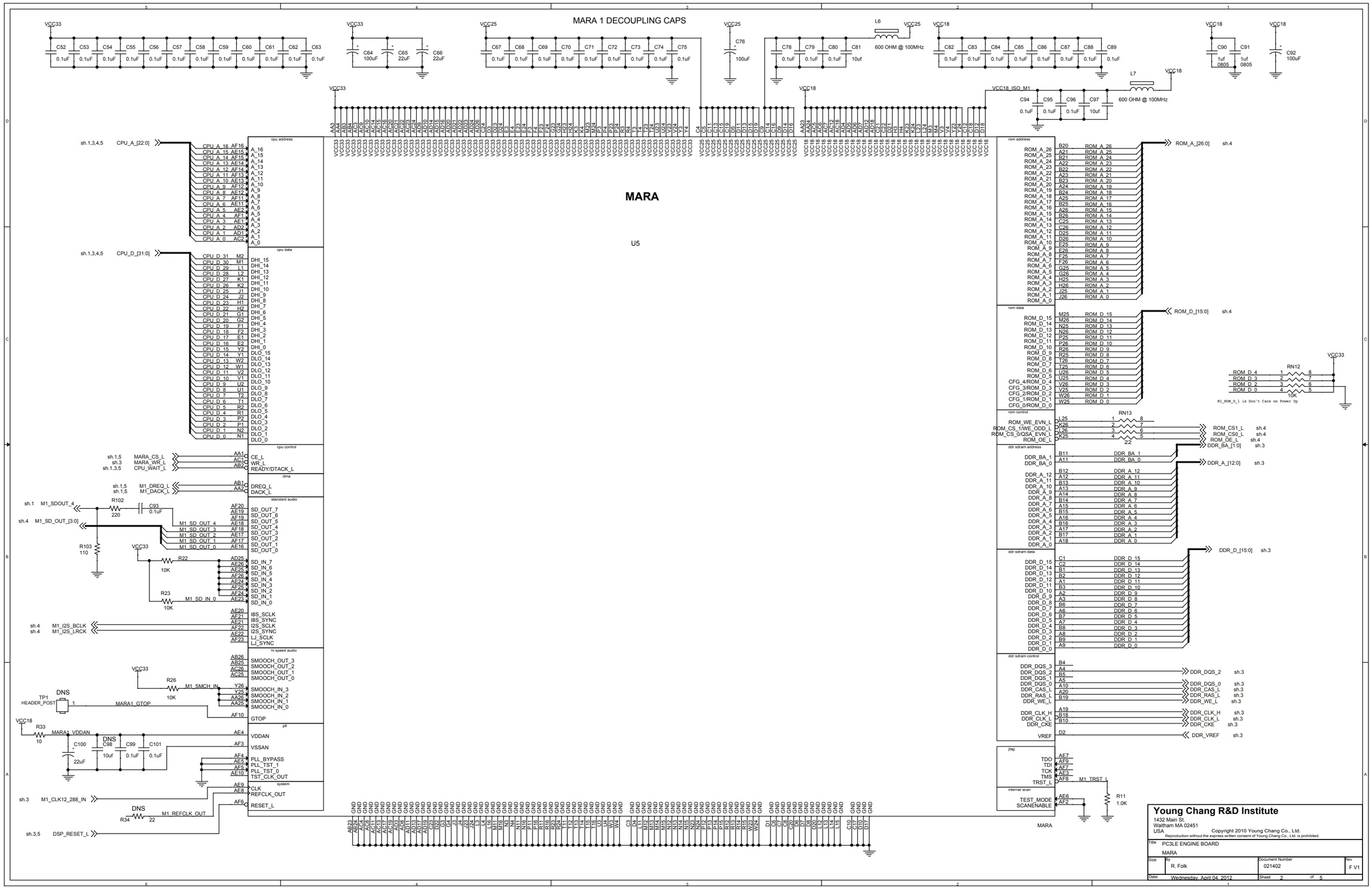
MARA 1 DECOUPLING CAPS
MARA
U5
cpu address
cpu data
cpu control
dma
standard audio
hi speed audio
pll
system
rom address
rom data
rom control
ddr sdram address
ddr sdram data
ddr sdram control
jtag
internal scan
Young Chang R&D Institute
1432 Main St.
Waltham MA 02451
USA
Copyright 2010 Young Chang Co., Ltd.
Reproduction without the express written consent of Young Chang Co., Ltd. is prohibited.
PC3LE ENGINE BOARD
MARA
R. Folk
021402
F V1
Wednesday, April 04, 2012
Sheet 2 of 5

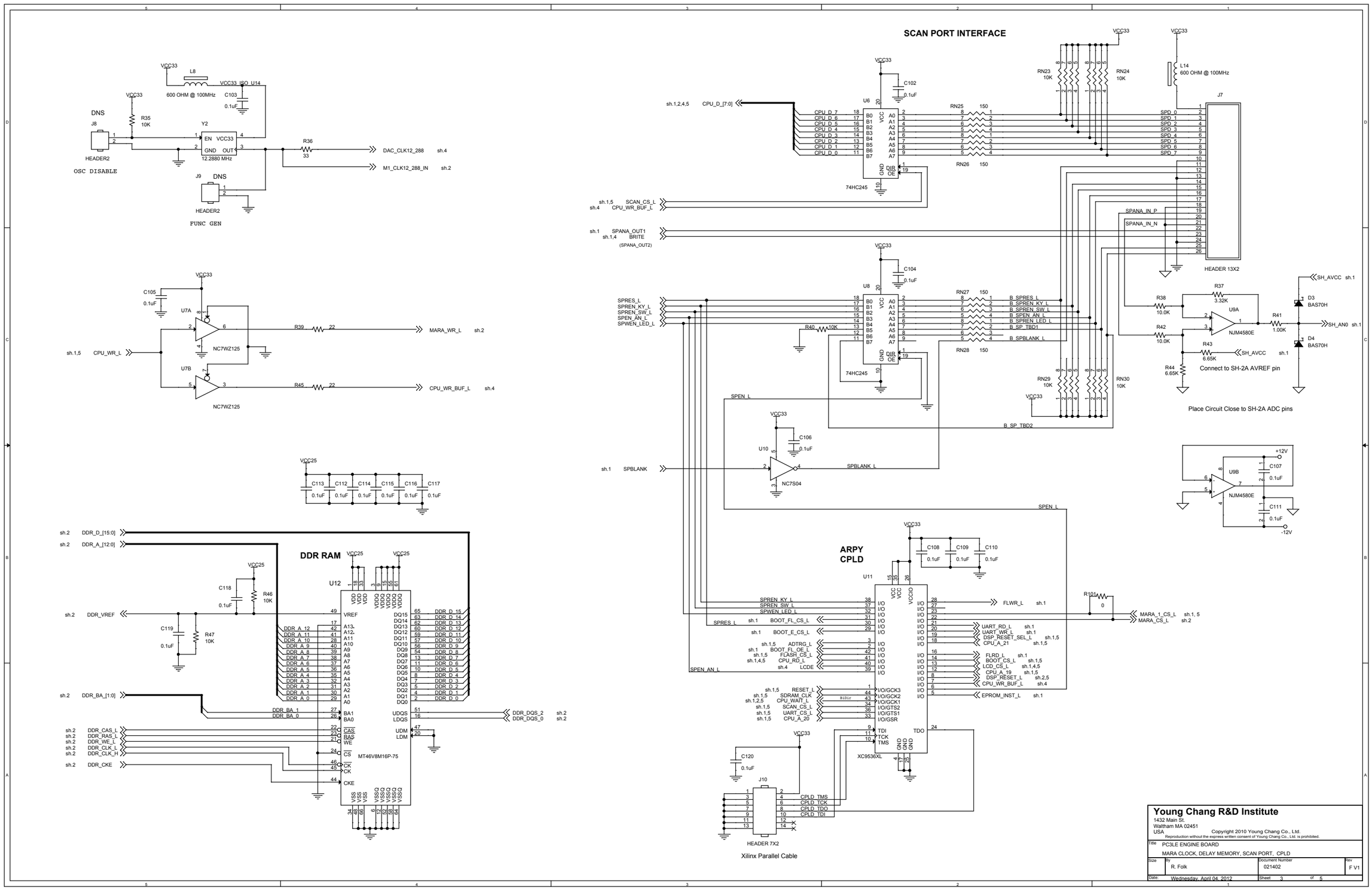
SCAN PORT INTERFACE
DDR RAM
ARPY CPLD
VCC33
VCC25
L8
600 OHM @ 100MHz
VCC33_ISO_U14
C103
0.1uF
DNS
J8
R35
10K
Y2
EN VCC33
GND OUT
12.2880 MHz
R36
33
DAC_CLK12_288 sh.4
M1_CLK12_288_IN sh.2
HEADER2
OSC DISABLE
J9
FUNC GEN
C105
U7A
U7B
NC7WZ125
R39 22
R45 22
MARA_WR_L sh.2
CPU_WR_BUF_L sh.4
sh.1,5 CPU_WR_L
C113 C112 C114 C115 C116 C117
sh.2 DDR_D_[15:0]
sh.2 DDR_A_[12:0]
sh.2 DDR_BA_[1:0]
sh.2 DDR_VREF
sh.2 DDR_CAS_L
sh.2 DDR_RAS_L
sh.2 DDR_WE_L
sh.2 DDR_CLK_L
sh.2 DDR_CLK_H
sh.2 DDR_CKE
C118
R46
10K
C119
R47
10K
U12
MT46V8M16P-75
DDR_DQS_2 sh.2
DDR_DQS_0 sh.2
sh.1,2,4,5 CPU_D_[7:0]
U6
74HC245
C102
RN23 10K
RN24 10K
RN25 150
RN26 150
L14
600 OHM @ 100MHz
J7
HEADER 13X2
sh.1,5 SCAN_CS_L
sh.4 CPU_WR_BUF_L
sh.1 SPANA_OUT1
sh.1,4 BRITE
(SPANA_OUT2)
SPANA_IN_P
SPANA_IN_N
U8
C104
SPRES_L
SPREN_KY_L
SPREN_SW_L
SPWEN_LED_L
SPEN_AN_L
R40 10K
RN27 150
RN28 150
RN29 10K
RN30 10K
B_SPRES_L
B_SPREN_KY_L
B_SPREN_SW_L
B_SPEN_AN_L
B_SPREN_LED_L
B_SP_TBD1
B_SPBLANK_L
B_SP_TBD2
SPEN_L
U10
C106
sh.1 SPBLANK
SPBLANK_L
NC7S04
R37
3.32K
R38
10.0K
R42
10.0K
R43
6.65K
R44
6.65K
U9A
NJM4580E
R41
1.00K
D3
BAS70H
D4
BAS70H
SH_AVCC sh.1
SH_AN0 sh.1
Connect to SH-2A AVREF pin
Place Circuit Close to SH-2A ADC pins
U9B
C107
C111
+12V
-12V
C108 C109 C110
U11
XC9536XL
SPREN_KY_L
SPREN_SW_L
SPWEN_LED_L
SPRES_L
SPEN_AN_L
sh.1 BOOT_FL_CS_L
sh.1 BOOT_E_CS_L
sh.1,5 ADTRG_L
sh.1 BOOT_FL_OE_L
sh.1,5 FLASH_CS_L
sh.1,4,5 CPU_RD_L
sh.4 LCDE
sh.1,5 RESET_L
sh.1,5 SDRAM_CLK
sh.1,2,5 CPU_WAIT_L
sh.1,5 SCAN_CS_L
sh.1,5 UART_CS_L
sh.1,5 CPU_A_20
FLWR_L sh.1
UART_RD_L sh.1
UART_WR_L sh.1
DSP_RESET_SEL_L sh.1,5
CPU_A_21 sh.1,5
FLRD_L sh.1
BOOT_CS_L sh.1,5
LCD_CS_L sh.1,4,5
CPU_A_19 sh.1,5
DSP_RESET_L sh.2,5
CPU_WR_BUF_L sh.4
EPROM_INST_L sh.1
R101 0
MARA_1_CS_L sh.1, 5
MARA_CS_L sh.2
C120
J10
CPLD_TMS
CPLD_TCK
CPLD_TDO
CPLD_TDI
HEADER 7X2
Xilinx Parallel Cable
Young Chang R&D Institute
1432 Main St.
Waltham MA 02451
USA
Copyright 2010 Young Chang Co., Ltd.
Reproduction without the express written consent of Young Chang Co., Ltd. is prohibited.
Title PC3LE ENGINE BOARD
MARA CLOCK, DELAY MEMORY, SCAN PORT, CPLD
Size
By R. Folk
Document Number 021402
Rev F V1
Date: Wednesday, April 04, 2012
Sheet 3 of 5

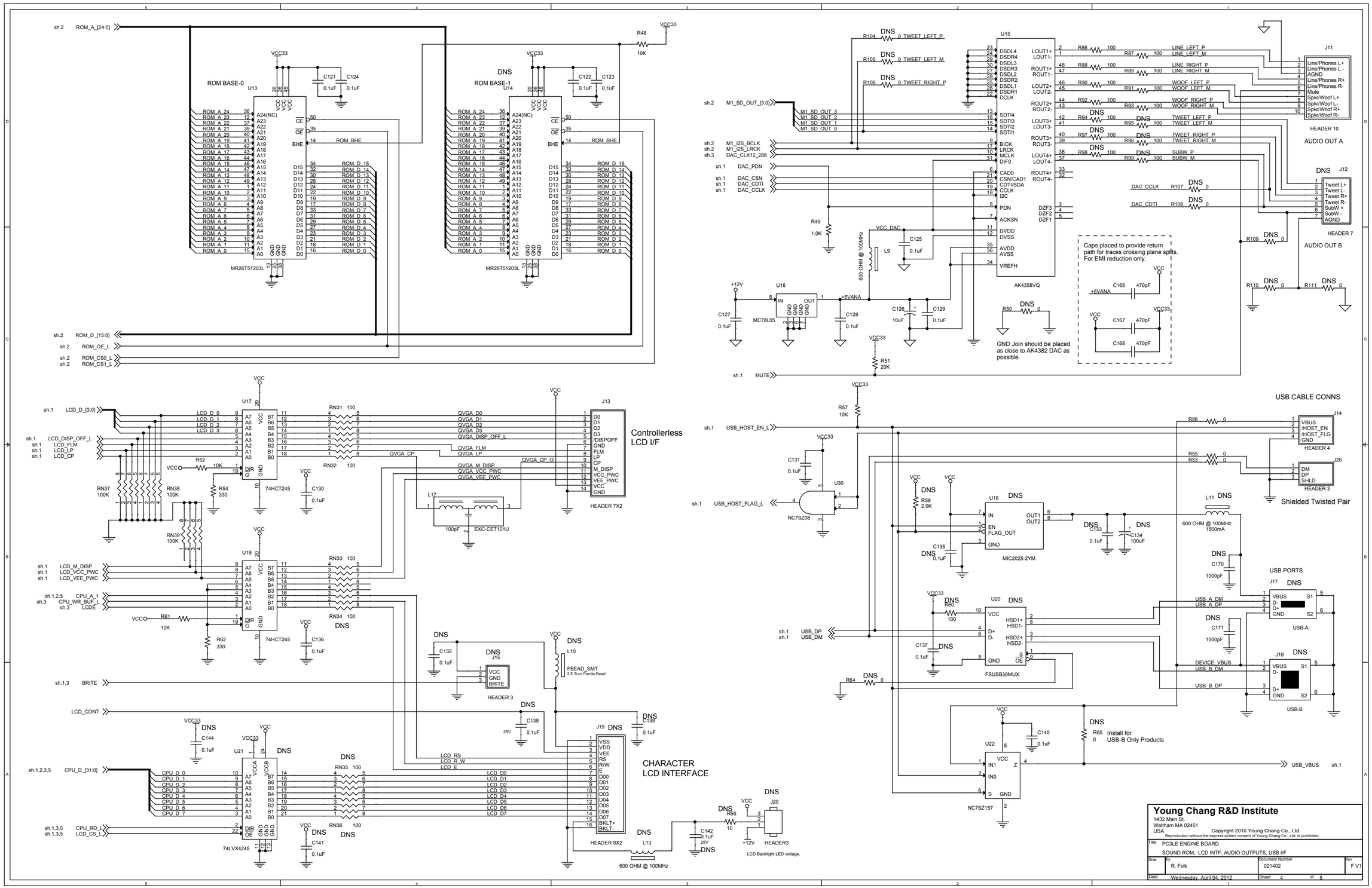
ROM BASE-0
ROM BASE-1
MR26T51203L
Controllerless LCD I/F
CHARACTER LCD INTERFACE
HEADER 7X2
HEADER 8X2
HEADER 3
74HCT245
74LVX4245
MC78L05
AK4358VQ
MIC2025-2YM
FSUSB30MUX
NC7SZ08
NC7SZ157
FBEAD_SMT
2.5 Turn Ferrite Bead
EXC-CET101U
600 OHM @ 100MHz
LCD Backlight LED voltage.
HEADER3
AUDIO OUT A
AUDIO OUT B
USB CABLE CONNS
HEADER 4
HEADER 3
Shielded Twisted Pair
USB PORTS
USB-A
USB-B
Caps placed to provide return path for traces crossing plane splits. For EMI reduction only.
GND Join should be placed as close to AK4382 DAC as possible.
Install for USB-B Only Products
Young Chang R&D Institute
1432 Main St.
Waltham MA 02451
USA
Copyright 2010 Young Chang Co., Ltd.
Reproduction without the express written consent of Young Chang Co., Ltd. is prohibited.
PC3LE ENGINE BOARD
SOUND ROM, LCD INTF, AUDIO OUTPUTS, USB I/F
R. Folk
021402
F.V1
Wednesday, April 04, 2012
Sheet 4 of 5

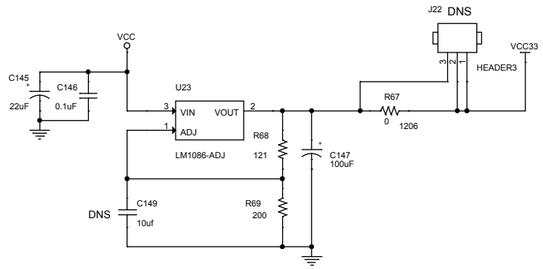

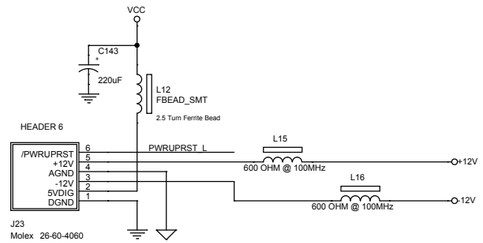

POWER CONN

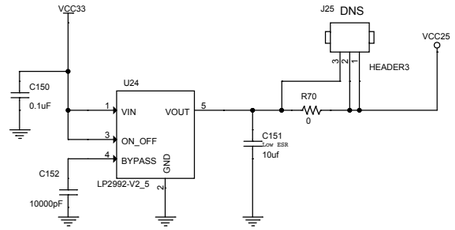

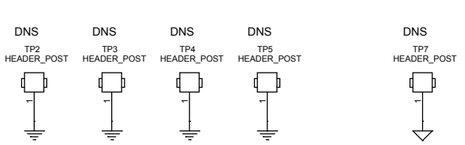

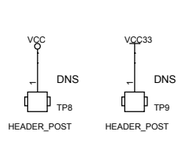

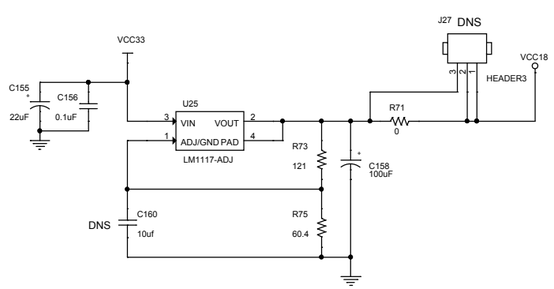

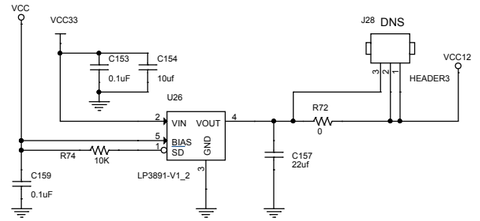

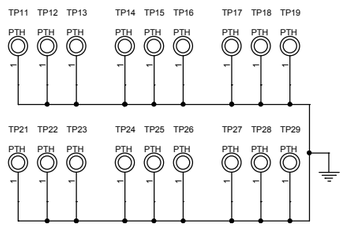

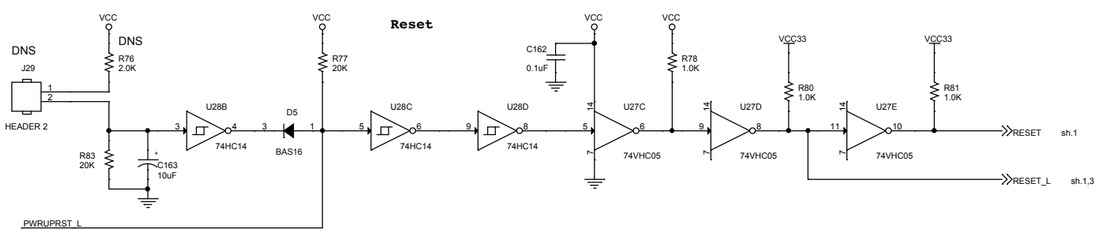

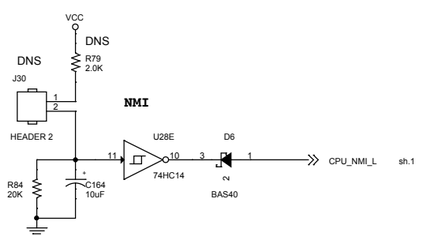

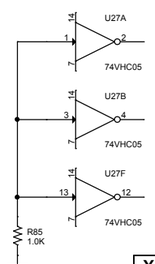

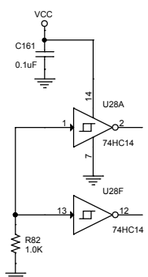

Young Chang R&D Institute

1432 Main St.
Waltham MA 02451
USA

Copyright 2010 Young Chang Co., Ltd.
Reproduction without the express written consent of Young Chang Co., Ltd. is prohibited.

Title	PC3LE ENGINE BOARD Power Circuitry, Test Headers, Reset		
Size	By: R. Folk	Document Number: 021402	Rev: F V1
Date: Wednesday, April 04, 2012		Sheet 5 of 5	

REVISION RECORD			
LTR	ECO NO:	APPROVED:	DATE:

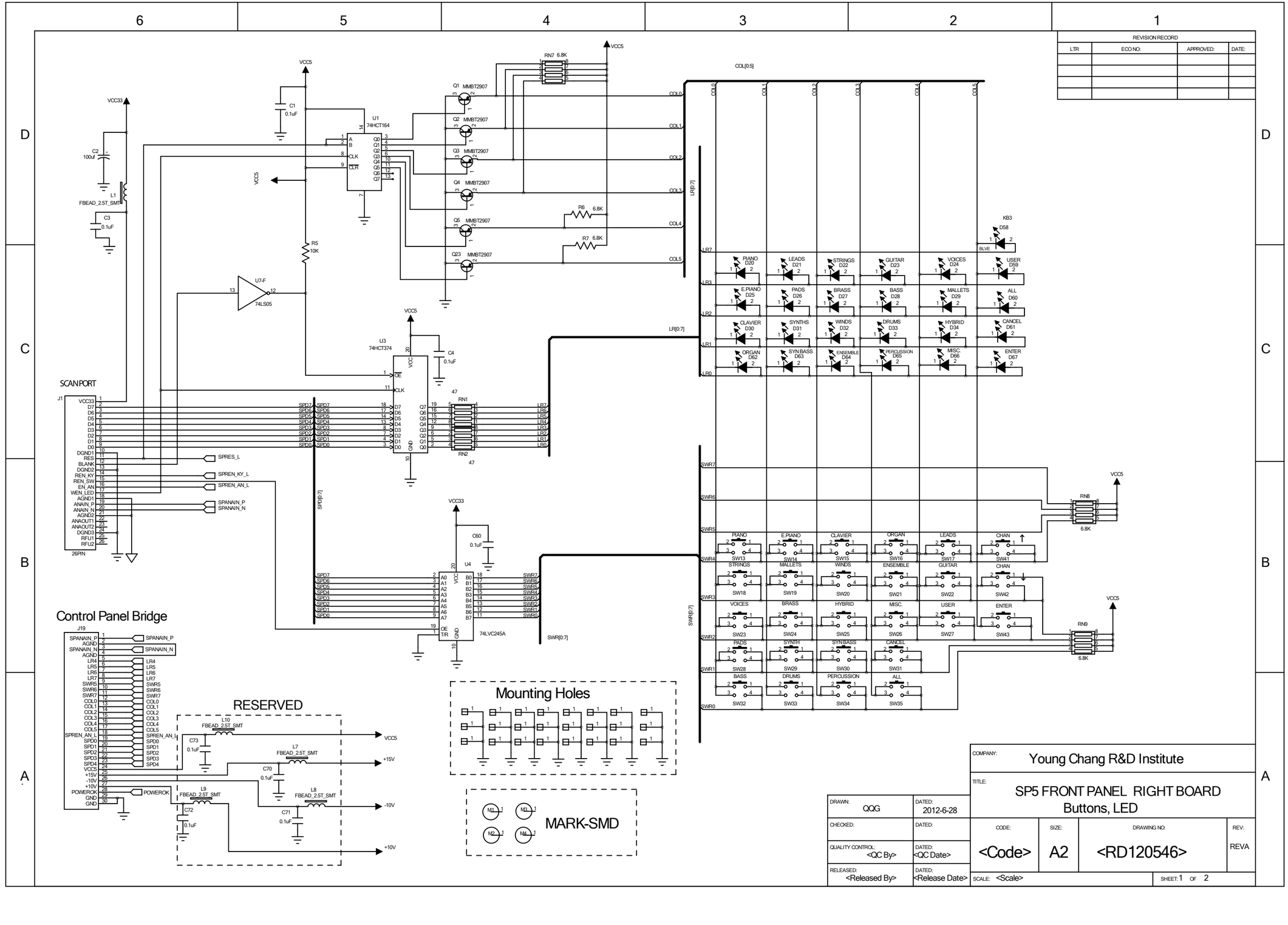

COMPANY: Young Chang R&D Institute			
TITLE: SP5 FRONT PANEL RIGHT BOARD Buttons, LED			
DRAWN: QQG	DATED: 2012-6-28		
CHECKED:	DATED:	CODE: <Code>	SIZE: A2
QUALITY CONTROL: <QC By>	DATED: <QC Date>	DRAWING NO: <RD120546>	REV: REVA
RELEASED: <Released By>	DATED: <Release Date>	SCALE: <Scale>	SHEET: 1 OF 2

REVISION RECORD			
LTR	ECO NO:	APPROVED:	DATE:

Usage table for U12, R23, R24, R107

Use only one row

U6	R18	R17	R107
PC910	3K	10K	5.6K
6N138	270	DNS	510
6N139	270	DNS	510

POWER SWITCH

USB CONTROL

DC POWER OUT
TO ENGINE BOARD
MINIMUM VCC5
LOAD=0.25A

Only used for debug, DNS for mass production

KeyID

J3 TREBLE

J5

BASS

COMPANY:	Young Chang R&D Institute		
TITLE:	SP5 FRONT PANEL RIGHT BOARD		
DRAWN: QQG	DATED: 2012-6-28	CODE: <Code>	SIZE: A2
CHECKED:	DATED:	DRAWING NO: <RD120546>	REV: REVA
QUALITY CONTROL: <QC By>	DATED: <QC Date>		
RELEASED: <Released By>	DATED: <Release Date>	SCALE: <Scale>	SHEET: 2 OF 2

Control Panel Bridge

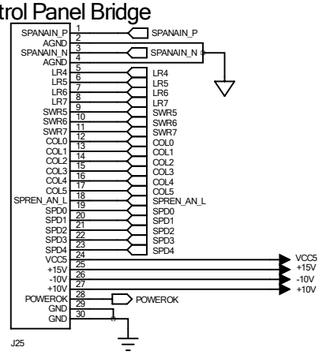

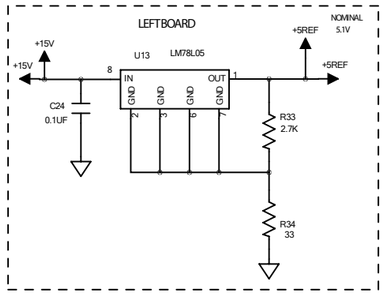

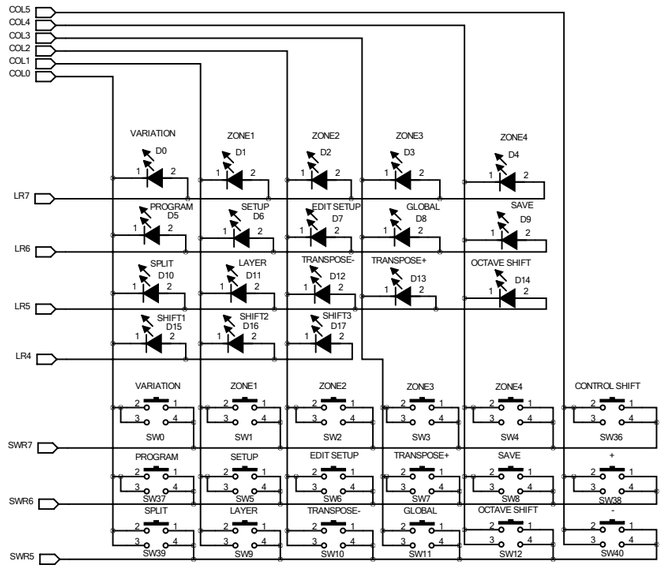

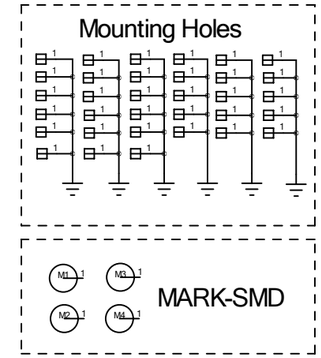

REVISION RECORD			
LTR	ECO NO:	APPROVED:	DATE:

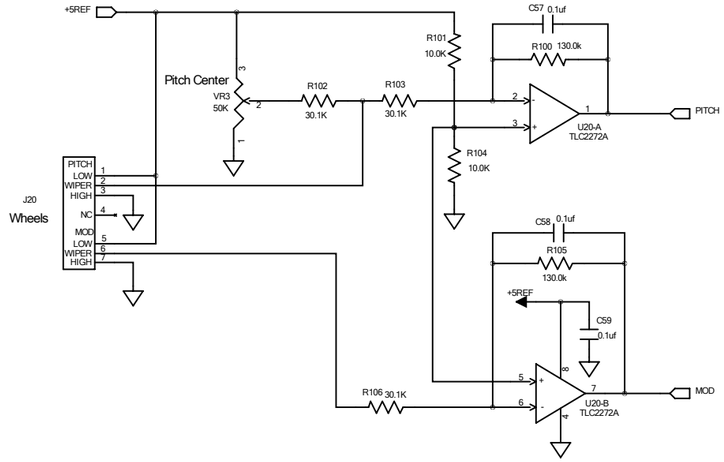

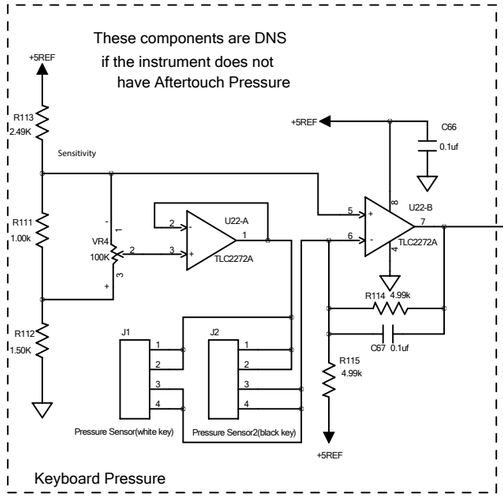

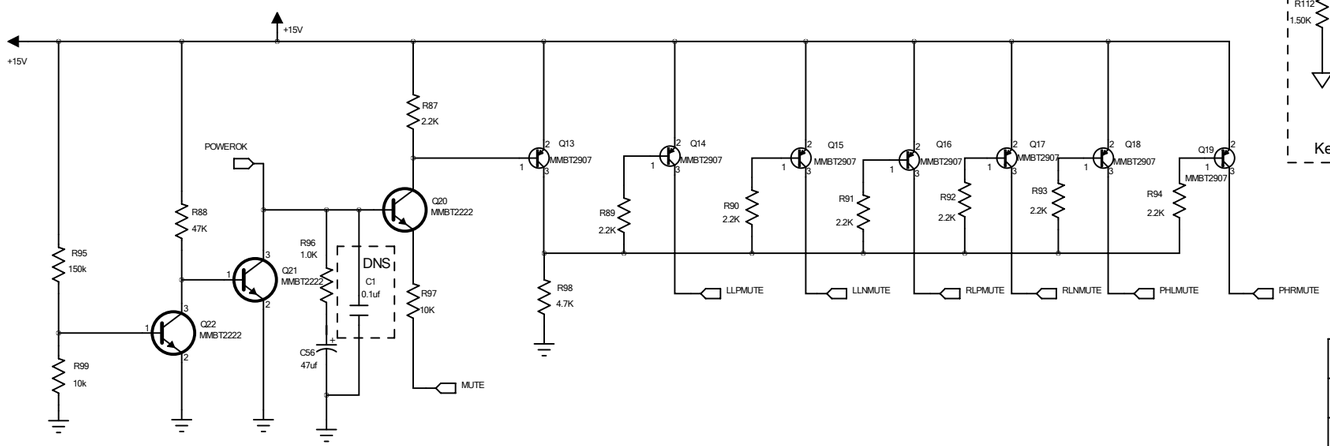

COMPANY:	Young Chang R&D Institute		
TITLE:	SP5 FRONT PANEL LEFT BOARD		
DRAWN: QQG	DATED: 2012-6-26	CODE: <Code>	SIZE: A2
CHECKED:	DATED:	DRAWING NO: <RD120545>	REV: REVA
QUALITY CONTROL: <QC By>	DATED: <QC Date>	SCALE: <Scale>	SHEET: 1 OF 2
RELEASED: <Released By>	DATED: <Release Date>		

REVISION RECORD			
LTR	ECO NO:	APPROVED:	DATE:

COMPANY:	Young Chang R&D Institute	
TITLE:	SP5 FRONT PANEL LEFT BOARD	
DRAWN: QQG	DATED: 2012-6-26	CODE: <Code> / SIZE: A2 / DRAWING NO: <RD120545> / REV: REVA
CHECKED:	DATED:	
QUALITY CONTROL: <QC By>	DATED: <QC Date>	
RELEASED: <Released By>	DATED: <Release Date>	SCALE: <Scale> / SHEET: 2 OF 2

REVISION RECORD			
LTR	ECO NO:	APPROVED:	DATE:

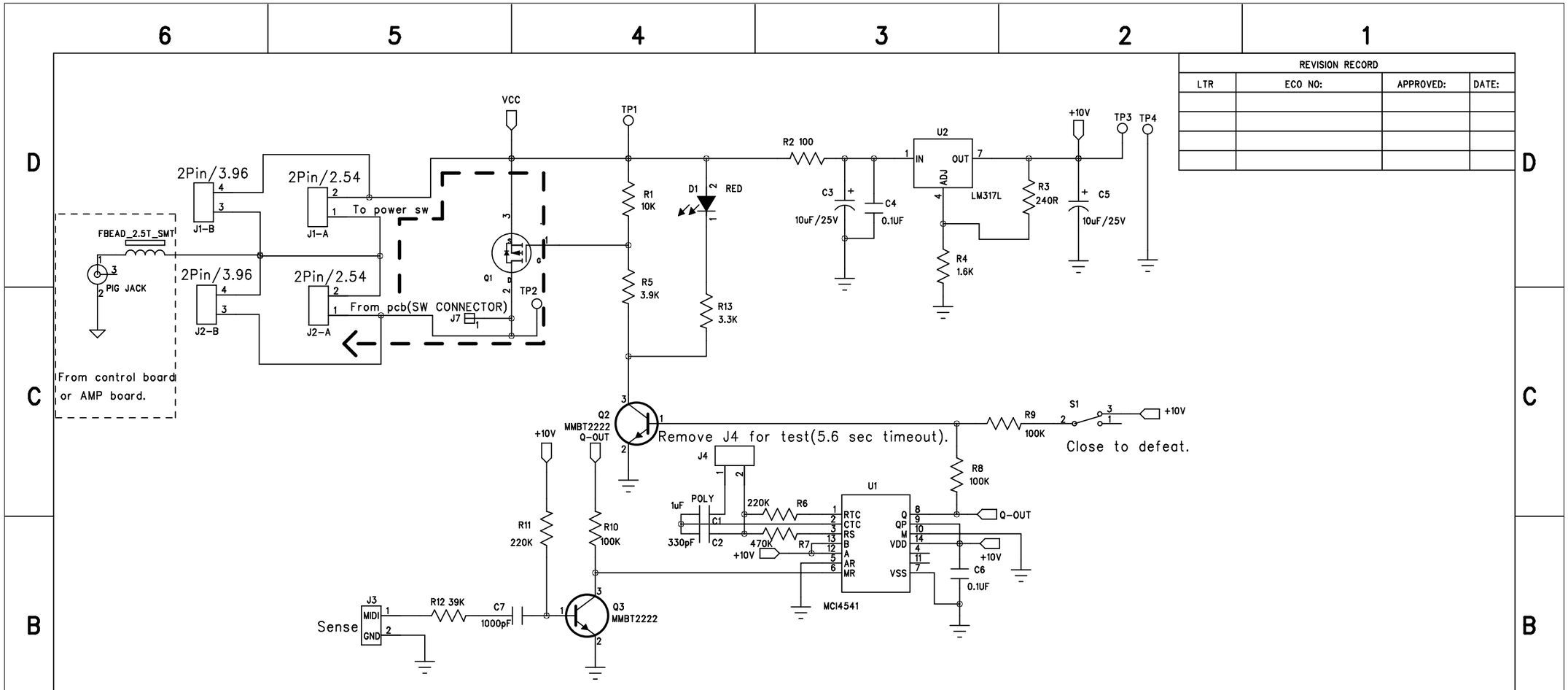

DRAWN: <QQG>	DATED: <2013-04-24>
CHECKED: <CHENSI>	DATED: <2013-04-24>
QUALITY CONTROL:	DATED:
RELEASED:	DATED:

COMPANY: KURZWEIL

TITLE: ERP CONTROL BOARD

(NOTE: This PCB is present only in units exported to Europe.)

CODE:	SIZE:	DRAWING NO:	REV:
<Code>	B	RD121214	<REVD>

SCALE: <Scale> SHEET: 1 OF 1

Index

A

Assembly instructions
- Engine PCB 4-7
- Keyboard Assembly 4-15
- LCD 4-10
- Left Front Panel PCB 4-12
- Right Front Panel PCB 4-9
- Top Enclosure 4-4

Assembly instructions, Keyboard
- Keyboard Contact PCBs 4-18, 4-19, 4-20
- replacing contact strips 4-21
- replacing keys 4-17

Audio Problems:troubleshooting 5-4
Automatic Shutdown (ERP Control) PCB
- Function Summary 2-9
- schematic diagram 7-12

B

Boot Loader 3-1, 5-2
Bottom Enclosure 4-13
- diagram 4-2, 4-13

D

Diagnostic Test Descriptions
- Audio Output 3-4
- Burn-in Test 3-6
- Internal Flash 3-3
- MARA Delay RAM 3-4
- MARA Sound ROM 3-4
- MARA Validity 3-3
- Scanner DIAG 3-5
- SDRAM Refresh 3-3

Diagnostic Test Modes: descriptions 3-2
Diagnostic Tests
- entering 3-1
- test results 3-2

Diagram
- Engine PCB 4-7
- Interconnect 5-7
- key
  - natural 4-15
  - sharp 4-16
- keyboard contact strips 4-21
- keyboard hardware 4-13
- Left Front Panel PCB 4-11
- Right Front Panel Panel PCB 4-9

Diagram schematic
- Automatic Shutdown (ERP Control) PCB 7-12
- Engine PCB 7-3, 7-4, 7-5, 7-6, 7-7
- Left Front Panel PCB 7-10, 7-11
- Right Front Panel PCB 7-8, 7-9

Disassembly instructions
- Engine PCB 4-6
- Keyboard Assembly 4-14
- LCD 4-10
- Left Front Panel PCB 4-10
- Right Front Panel PCB 4-8

Disassembly instructions, Keyboard
- Keyboard Contact PCBs 4-18, 4-19, 4-20
- removing contact strips 4-21

Double Press buttons 1-5

E

Engine PCB
- cables 4-6
- diagram 4-7
- diagram schematic 7-3, 7-4, 7-5, 7-6, 7-7
- Function Summary 2-1
- photo 4-6
- removing 4-6
- replacing 4-7

Entering Diagnostic Tests 3-1
Entering the Boot Loader 3-1, 5-2

F

Front Panel
- features 1-2

Front Panel PCBs
- Function Summary 2-5

Front Panel Problems
- troubleshooting 5-5

H

Hard Reset 5-2

I

Interconnect Diagram 5-7

K

Keyboard Assembly
- removing 4-14
- replacing 4-15
- troubleshooting 5-6

Keyboard Contact PCBs
- contact strips
  - diagram 4-21
  - removing 4-21
  - replacing 4-21
- photo 4-18
- removing
  - Hi 4-20
  - Lo 4-18
  - Mid 4-19
- replacing
  - Hi 4-20
  - Lo 4-18
  - Mid 4-19

Keys
diagram
natural 4-15
sharp 4-16
key clips photo 4-16
key spring photo 4-17
removing 4-15
replacing 4-17
Kurzweil International Contacts iv

L

LCD
removing 4-10
replacing 4-10
Left Front Panel PCB
cables 4-11
diagram 4-11
diagram schematic 7-10, 7-11
Function Summary 2-7
removing 4-10
replacing 4-12

P

Photo
Engine PCB 4-6
keyboard chassis 4-18
key clips 4-16
key spring 4-17
Power Problems: troubleshooting 5-4
Printed Circuit Board Descriptions
Automatic Shutdown (ERP Control) PCB 2-9
Engine 2-1
Left Front Panel PCB 2-7
Right Front Panel PCB 2-6

R

Rear Panel
diagram 1-6, 4-2
features 1-6
Resets 5-2
Right Front Panel PCB
cables 4-8
diagram 4-9
diagram schematic 7-8, 7-9
Function Summary 2-6
removing 4-8
replacing 4-9

S

Software Updates 5-3
System Reset 5-2

T

Top Enclosure
removing 4-3
replacing 4-4
Troubleshooting
Audio 5-4
Keyboard 5-6
Power 5-4