FILE COPY.

SP-850-1

CAR STEREO SERVICE MANUAL

4-TRACK CASSETTE CAR STEREO TAPE PLAYER

TOYOTA PART No.	FUJITSU TEN MODEL No.	VEHICLE
86260-30110	SP-850-1	CROWN (RHD)

GENERAL

This custom-made auto reverse cassette tape player is specifically designed for use in TOYOTA CROWN produced after September 1979, in combination with the custom-made radio receiver.

TAPE PLAYER	RECEIVER		SPEAKER SYSTEM
	MODEL	FUNCTION	
86260-30110 (SP-850-1)	86120-30480 (AT-336-1)	AM/FM (MPX) SEARCH	4-speaker system
	86120-30530 (AT-269-1)	MW/SW 6-PUSH BUTTON	
	86120-30510 (AT-3611-1)	LW/MW/UKW (MPX) SEARCH	

NOTE: It is recommended to use 60- or 90-minute cassette tape, because 120-minute cassette tape is very thin and delicate.

TOYOTA MOTOR SALES CO., LTD.

COMPOSITIONS

TAPE PLAYER AND SETTING PARTS SET 86021-39025 (SP-850S1)	—Tape player assembly	86260-30110 (SP-850-1)	1
	—Bracket, tape player rear	86266-30060 (RN-MBF-66)	1
	—Screw	93319-15008 (RN-MCW-B5×8S)	4

NOTES: 1. Speaker assemblies 86160-30120 (SB-4095) and rear speaker assemblies 86160-30140 (SB-4096) or 86160-30130 (RN-ESP-18EB-58) already installed with radio for tape player.

2. Above numbers in parenthesis denote FUJITSU TEN's numbers.

SPECIFICATIONS

NUMBER OF TRACKS	4-track 2-channel
TAPE CARTRIDGE	Stereo/Monaural compact cassette
TAPE SPEED	4.76 cm/sec. (1-7/8 i.p.s.)
WOW & FLUTTER	0.2% or less
CROSSTALK	35 dB or better between adjacent tracks
	25 dB or better between left and right channels
FREQUENCY RESPONSE	$0\ ^{+3}_{-8}$ dB or better at 125 Hz
	$0\ ^{+3}_{-8}$ dB or better at 8 kHz
HIGHT CUT EFFECT	7±3 dB (at 10 kHz)
NOMINAL OUTPUT VOLTAGE	1.1 volt
OUTPUT IMPEDANCE	1k ohm per channel
POWER INPUT	12-volt car battery, negative terminal to ground
Voltage	13.2 VDC
Current	Approx. 0.3 ampere
	Approx. 1.8 ampere (Max.)
SEMICONDUCTOR	5 ICs, 5 transistors, 5 diodes
TAKE-UP TORQUE	40 to 60 gcm
DIMENSIONS	178(W) × 58(H) × 160(D) mm (7-1/64", 2-9/32", 6-19/64")
WEIGHT	Player— 1.4 kg (3.1 lbs.)

TAPE PLAYER AND AUTO RADIO CONNECTION

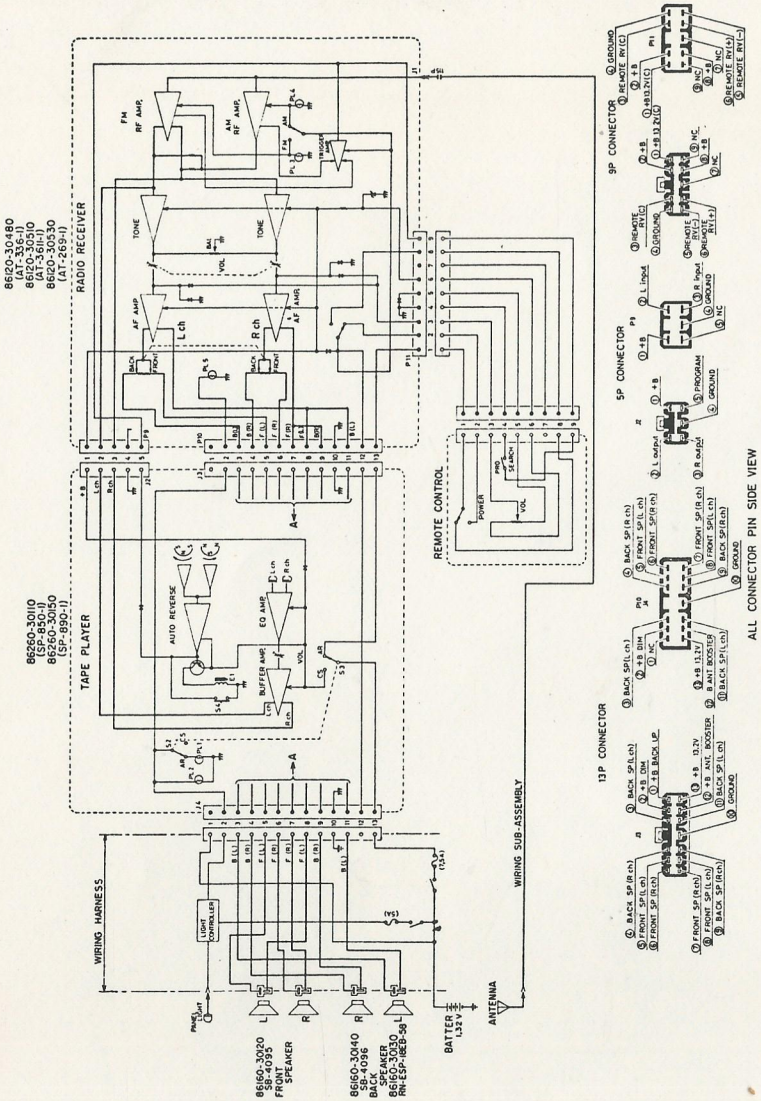

Fig. 1

ADJUSTMENT FOR TAKE-UP TORQUE

Measure the take-up torque inserting the torque gauge into the slip mechanisms as illustrated in Fig. 2 (A) with the motor rotating.

The torque should be always between 40 and 60 gcm. Set the springs ⓐ and ⓑ to the desirable position for the above value.

The roller has five positions for the spring to be put in.

The take-up torque may vary 5 gcm per step of the rolles.

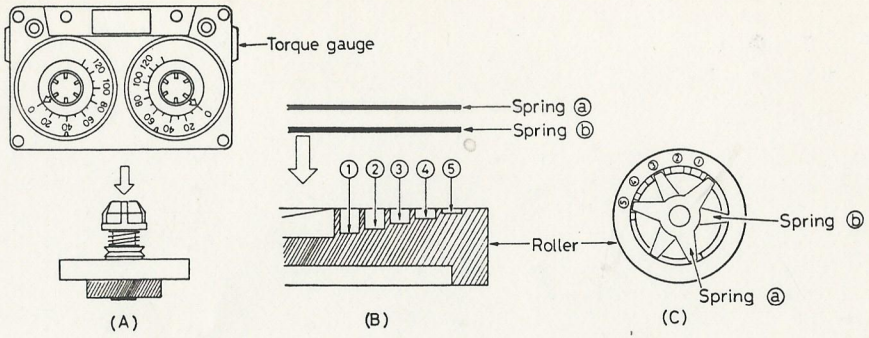

Fig. 2

PLAYBACK HEAD ADJUSTMENT (Azimuth)

Normally the playback head is precisely aligned at the factory and further adjustment should not be required unless the playback head or its mounting components are replaced. Beware of excessive adjustment, because improper adjustment results in inferior performance. If the azimuth is unnecessarily varied, the angle gets out of order, which cause lowering of tonal quality. Carefully adjust the azimuth adjust screw as shown in Fig. 3.

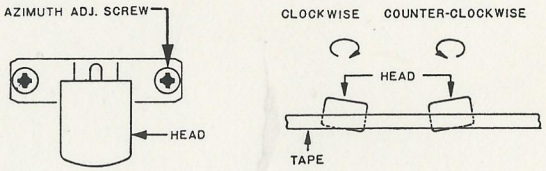

Fig. 3

* IN CASE OF USING TEST TAPE FOR AZIMUTH ADJUSTMENT

Insert a test tape for the azimuth adjustment and set the control knob to a proper level:

VOLUME CONTROL KNOB (VOL)..... In a proper level

BALANCE CONTROL KNOB (BAL) ..... In a center position

TONE CONTROL KNOB (TONE)..... Treble tone

Carefully adjust the azimuth adjust screw for maximum volume and treble tone. It is recommended that you connect a VTVM or circuit tester with the speaker terminals for obtaining the maximum value because test tape for azimuth adjustment is recorded high treble tones (6,300 Hz ordinary), and it is difficult to find the maximum volume without using test instrument. If test tape is not available, use a stereo tape with some high treble tones (piano or violin music is good for this) and follow the same procedure as outlined above.

SCHEMATIC

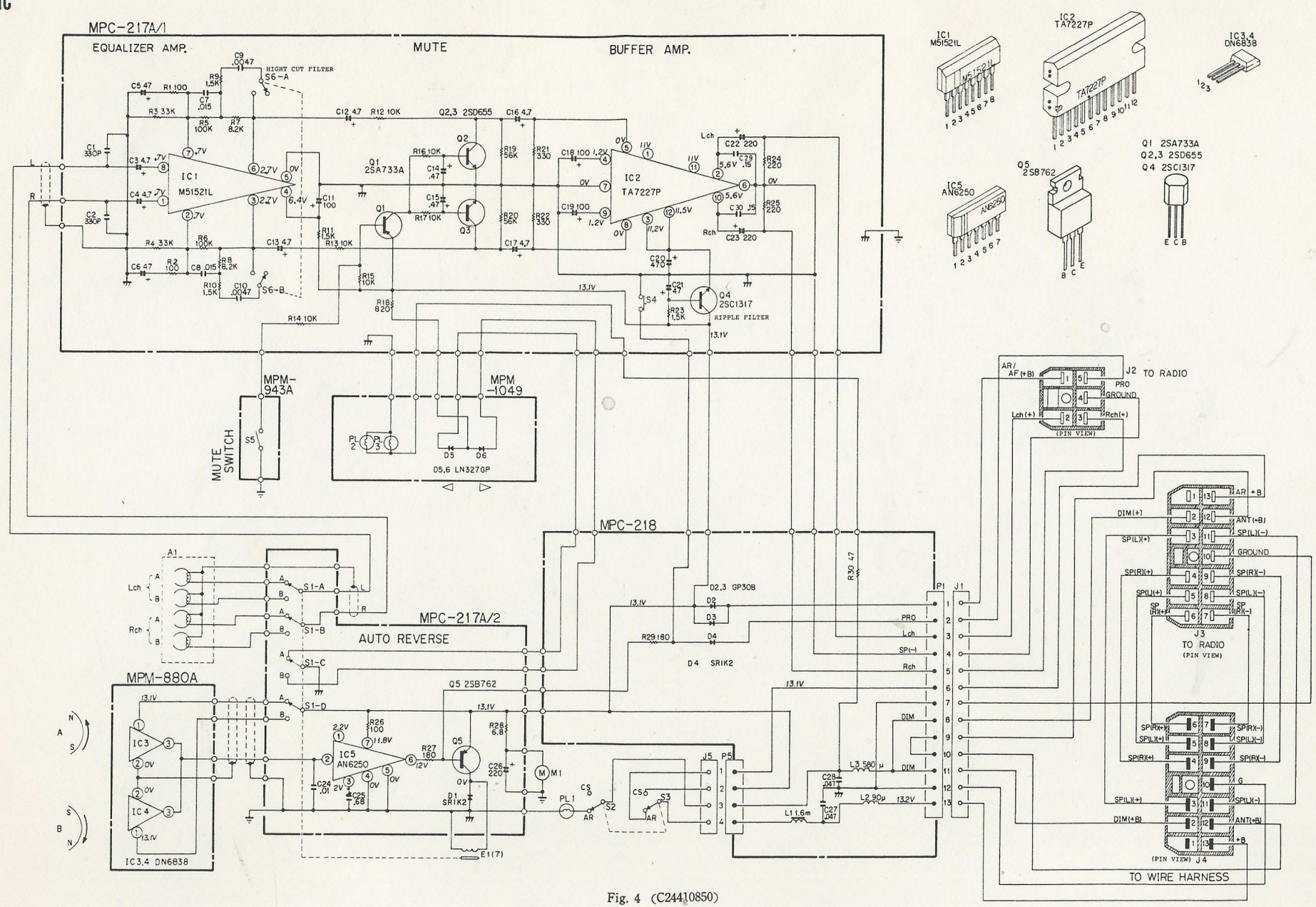

Fig. 4 (C24410850)

NOTES: 1. All resistance in ohm, K=10^3

2. All capacitance in μF, P=$\mu\mu$F

3. DC voltages against the chassis measured with 100k ohm/volt meter, power supply set at +13.2 VDC, no signal in put.

WIRING ON PC BOARDS

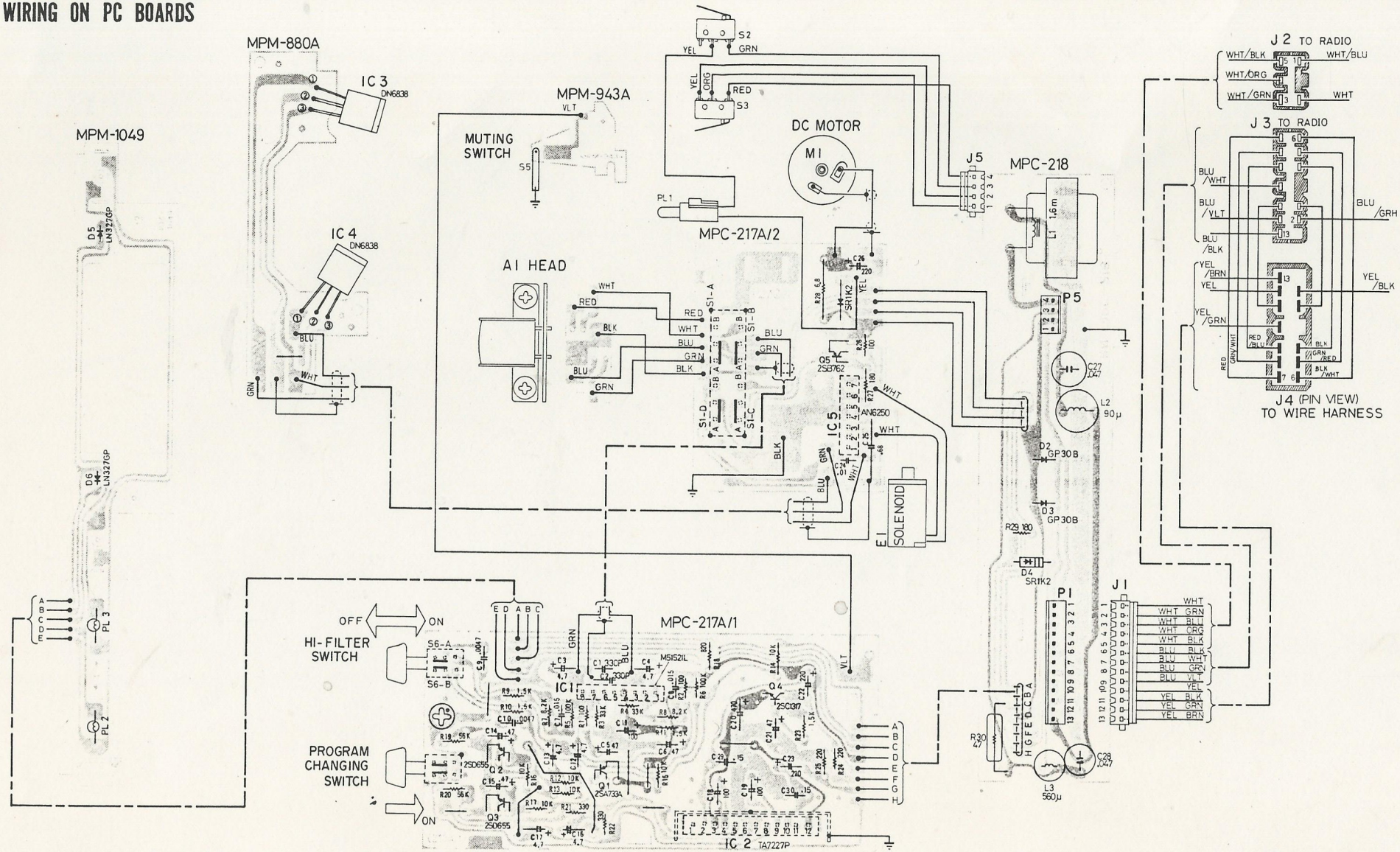

NOTE: PC board (RN-MPC-218) shows parts-side view.

Fig. 5

IC \ Pin No.	1	2	3	4	5	6	7	8	9	10	11	12
IC 1	.7V	.7V	2.7V	6.4V	0V	2.7V	.7V	.7V				
IC 2	11V	5.6V	11.5V	1.2V	0V	0V	0V	0V	1.2V	5.6V	11V	11.5V
IC 3, 4	13.1V	—	0V									
IC 5	2.2V	—	2V	0V	0V	12V	11.8V					

CLEANING

After extended use, the tape playback head and the drive capstan will build up a layer of iron oxide from the tape. The oxide layer in the case of the tape head prevents the tape from making full contact with the head and the result is a gradual loss of high frequency response and an increased noise level.

The oxide deposit on the capstan can cause slippage (wow) which might be mistaken for more serious mechanical drive problems.

A cleaner pen or similar object like the alcohol moistened swab is used.

First, using the end of a pencil, press the rod in the cassette door back until it gives a click sound.

Rub the parts such as playback head, capstan and pinchroller thoroughly to remove all traces of dirt and grime.

After cleaning, always remember to press the eject button to return the rod to its former position.

Do not use a solvent such as lighter fuel or lacquer thinner, which may cause damage to plastic parts orto instrument finish.

DEMAGNETIZATION

The head may become magnetized over a period of time. A magnetized head will record noise on a tape even when it is being used for playback. It is important that the head be demagnetized periodically.

The head can be demagnetized with a commercial demagnetizer (or degausser, as it is sometimes called.)

Such an instrument is not expensive, and represents a good investment for the owner who wants to keep his equipment in the best possible condition.

EXPLODED VIEW

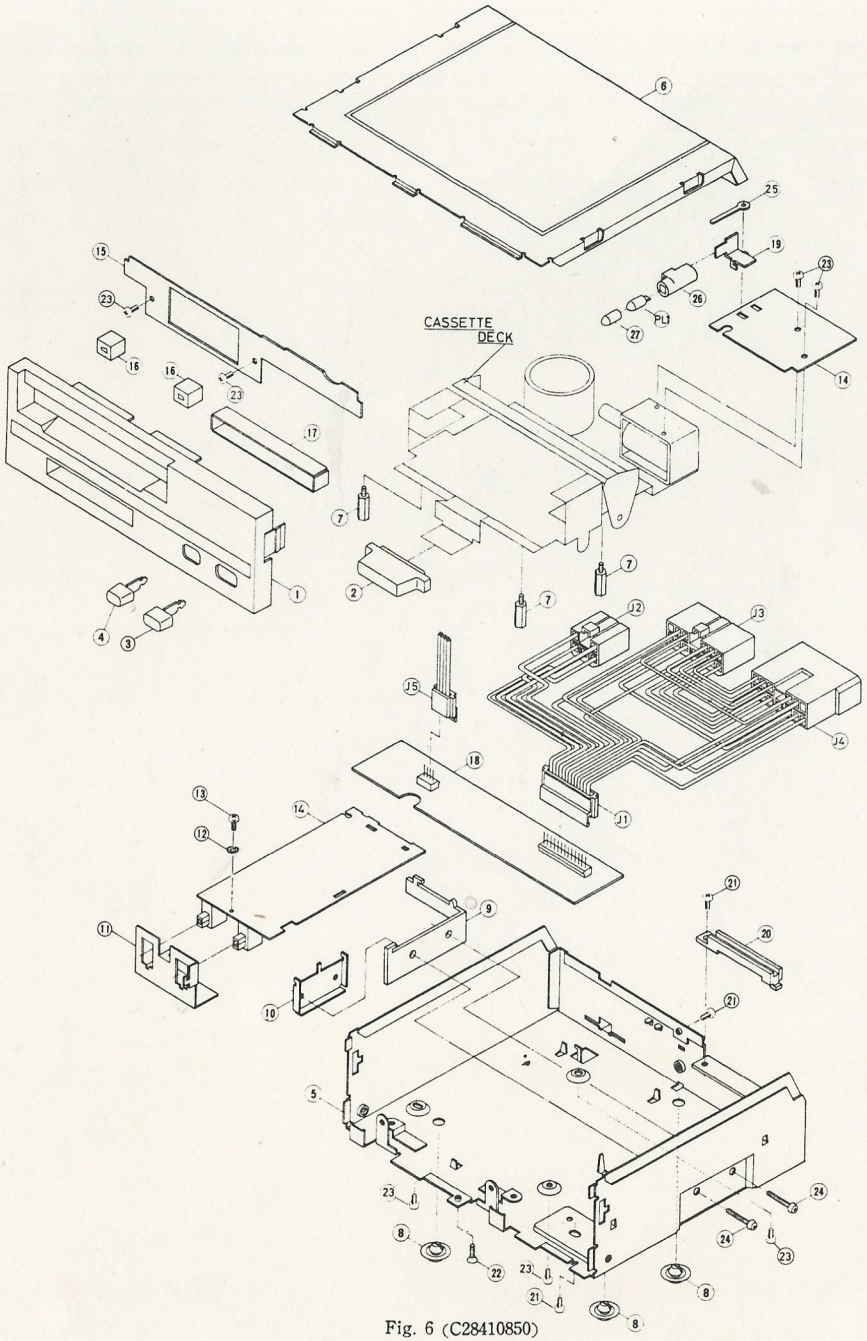

Fig. 6 (C28410850)

EXPLODED VIEW (CASSETTE DECK)

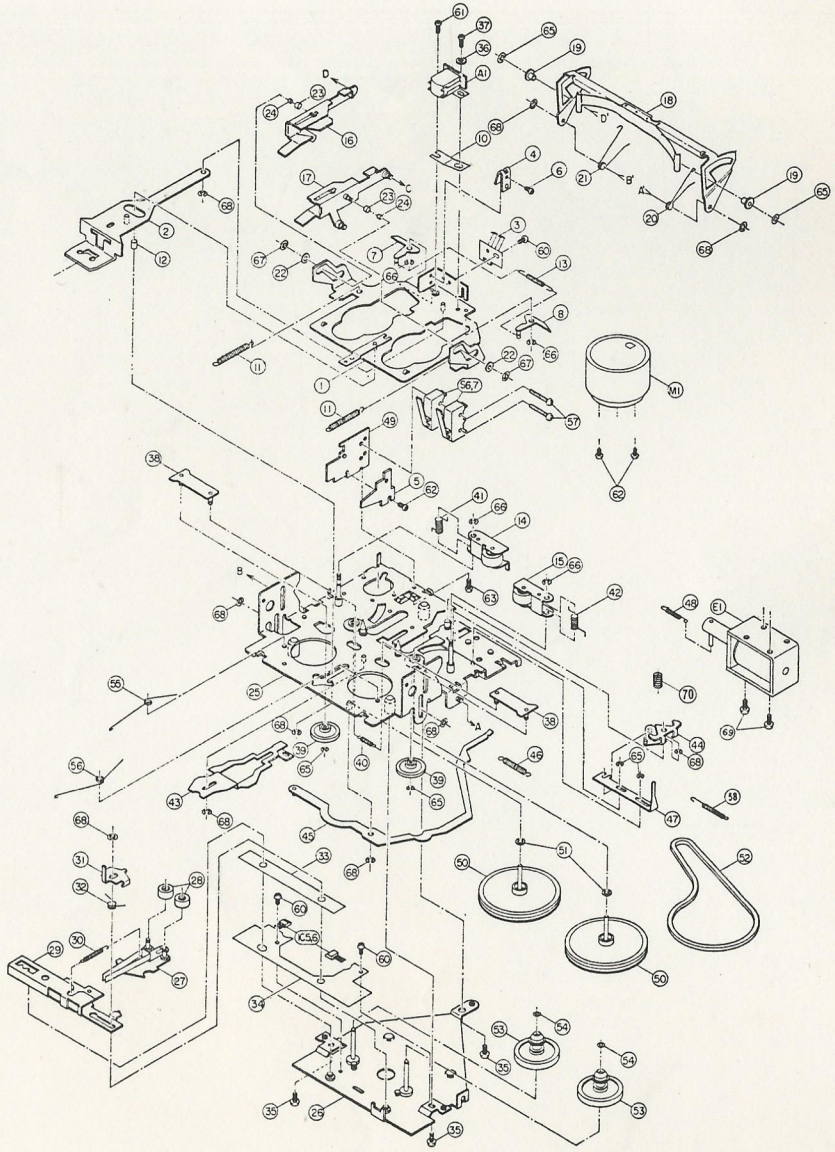

Fig. 7

REPLACEMENT PARTS LIST

Symbol No.	Stock No.	Description			
CAPACITORS					
$C_{1,2}$	RN-ECK-DB331KY	330 pF	50V		ceramic
$C_{3,4,12,13,16,17}$	RN-ECE-M4R7V25	4.7 μF	25V		electrolytic
$C_{5,6}$	RN-ECE-M470V10-4	47 μF	10V		〃
$C_{7,8}$	RN-ECF-R153V50	.015 μF	50V		mylar
$C_{9,10}$	RN-ECF-R472V50	.0047 μF	〃		〃
C_{11}	RN-ECE-M101V16-4	100 μF	16V		electrolytic
$C_{14,15}$	RN-ECE-MR47V50	.47 μF	50V		〃
$C_{18,19}$	RN-ECE-M101V10-4	100 μF	10V		〃
C_{20}	RN-ECE-M471V16-4	470 μF	16V		〃
C_{21}	RN-ECE-M470V16-4	47 μF	〃		〃
$C_{22,23}$	RN-ECE-M221V10-4	220 μF	10V		electrolytic
C_{24}	RN-ECB-DOX103E	.01 μF	50V		ceramic
C_{25}	RN-ECH-RR68V100	.68 μF	100V		metalized paper
C_{26}	RN-ECE-M221V16-4	220 μF	16V		electrolytic
$C_{27,28}$	RN-ECF-R473V50	.047 μF	50V		mylar
$C_{29,30}$	CA15E-1E-R1500-Z09G	.15 μF	9V		alox
RESISTORS					
$R_{1,2,26}$	RN-ERD-AE101JB	100 ohm	5%	¼W	carbon
$R_{3,4}$	RN-ERD-AE333JB	33k ohm	〃	〃	〃
$R_{5,6}$	RN-ERD-AE104JB	100k ohm	〃	〃	〃
$R_{7,8}$	RN-ERD-AE822JB	8.2k ohm	〃	〃	〃
$R_{9,10,11,23}$	RN-ERD-AE152JB	1.5k ohm	〃	〃	〃
$R_{12,13,14,15,16,17}$	RN-ERD-AE103JB	10k ohm	5%	¼W	carbon
R_{18}	RN-ERC-AF821K	820 ohm	10%	½W	solid
$R_{19,20}$	RN-ERD-AE563JB	56k ohm	5%	¼W	carbon
$R_{21,22}$	RN-ERD-AE331JB	330 ohm	〃	〃	〃
$R_{24,25}$	RN-ERD-AE221JB	220 ohm	〃	〃	〃
$R_{27,29}$	RN-ERG-AG181J	180 ohm	5%	1W	metallic
R_{28}	RN-ERC-AF6R8K	6.8 ohm	10%	½W	solid
R_{30}	RN-ERG-AH470J	47 ohm	5%	2W	metallic
SEMICONDUCTORS					
Q_1	RN-EVS-2SA733A-PQ	Muting, silicon transistor			
$Q_{2,3}$	RN-EVS-2SD655	Muting, silicon transistor			
Q_4	RN-EVS-2SC1317-QR	Power supply control, silicon transistor			
Q_5	RN-EVS-2SB762-P	Solenoid control, silicon transistor			
$D_{1,4,7}$	RN-EDS-SR1K2	Spark suppression, silicon diode			
$D_{2,3}$	RN-EDS-GP30B	Inverse current suppression, silicon diode			
$D_{5,6}$	RN-EDP-LN327GP	Tape RUN indicator, LED.			
IC_1	RN-EIC-M51521L	Equalizer amplifier, linear-monolithic IC			
IC_2	RN-EIC-TA7227P	Buffer amplifier, linear-monolithic IC			
$IC_{3,4}$	RN-EID-DN6838	Tape end detector, digital-monolithic IC			
IC_5	RN-EID-AN6250	Auto reverse control, digital-monolithic IC			

COILS		
L_1	RN-ELL-331	Choke, filter, 1.6mH
L_2	RN-ELL-315	Choke, filter, 90 μH
L_3	RN-ELL-334	Choke, filter, 560 μH

Symbol No.	Stock No.	Description
MISCELLANEOUS ELECTRICAL		
$J_{1,2,3,4}$	RN-EWJ-1375A	13P Connector and lead assy., speaker and power supply
J_5	RN-EWJ-1372	4P Connector and lead assy.,
P_1	RN-EJU-S13V-315	13P Connector, speaker and power supply,
P_5	RN-EJU-S04V-255	4P Connector, power supply
PL_1	RN-EPL-33	Lamp, door light
	RN-EXL-109	Socket, PL_1 ㊱ Fig. 6
	RN-MLF-66	Filter, PL_1 silicon rubber ㊲ Fig. 6
$PL_{2,3}$	RN-EPL-74-1	Lamp, escutcheon light
	RN-ELF-88	Filter, silicon rubber, $PL_{2,3}$
S_{1}-A, D	RN-ESB-4N2-135	Push switch, program changing
S_4	RN-ESB-2N2-153	Push switch, program changing
S_6	RN-ESB-2L2-152	Push switch, HI-FILTER ON/OFF

Illus. No. (Fig. 6)	Stock No.	Description	Q'ty
MECHANICAL			
1	RN-MDP-369	Escutcheon (includes door spring and shaft)	1
2	RN-MYB-319	Button, stop and eject	1
3	RN-MYB-322A	Button, program changing	1
4	RN-MYB-323A	Button, HI-FILTER ON/OFF	1
5	RN-MAD-296A	Chassis, bottom	1
6	RN-MAD-299A	Chassis, top	1
7	RN-MET-258	Special screw, deck mounting	3
8	RN-MSS-52	Spacer, rubber	3
9	RN-MRE-142	Radiator, power IC	1
10	RN-MHU-158	Holder, power IC mounting	1
11	RN-MHE-720	Holder, switch ($S_{4,6}$) mounting	1
12	RN-MAW-A3S	Washer, 3mm, ground	1
13	RN-MET-168	Special screw, 3×6mm	1
14	RN-MPC-217A	PC board, min (includes auto reverse)	1
15	RN-MPM-1049	PC board, lamp	1
16	RN-MSE-203	Spacer, LED mounting	2
17	RN-MLC-184	Spacer, $PL_{2,3}$	1
18	RN-MPC-218	PC board, power supply	1
19	RN-MHE-723	Holder, lamp (PL_1) mounting	1
20	RN-MCE-160	Clamp, wiring sub assembly	1
ASSEMBLY MATERIAL			
21	RN-MET-168	Special screw,	3
22	RN-MET-189	Special screw, escutcheon mounting	1
23	F6-SBD-3×6S	Screw, 3×6mm	7
24	F6-SBD-3×10S	Screw, 3×10mm, power IC mounting	2
25	RN-MCF-1003	Clamp, wiring	1

CASSETTE DECK UNIT

Illus. No. (Fig. 7)	Stock No.	Description	Q'ty
ELECTRICAL			
A_1	RN-EHM-C44-33	Playback head (LTM)	1
E_1	RN-MKT-6	Solenoid, program changing	1
M_1	RN-EDM-1004	DC motor 361 27084	1
$S_{6,7}$	RN-ESM-1004	Micro switch, power supply changing	2
$IC_{3,4}$	RN-EID-DN6838	Tape end detector	2
MECHANICAL			
1	RN-MYT-97	Slide plate, head mounting	1
2	RN-MUL-269	Lever, eject and stop	1
3	RN-MSP-153	Spring, micro switch ON/OFF	1
4	RN-MSP-151	Spring, muting switch	1
5	RN-MPM-943B	PC board, muting switch	1
6	F6-SNA-2×1.5S	Screw, 2×1.5mm	1
7	RN-MUL-214	Lever, (left)	1
8	RN-MUL-215	Lever, (right)	1
9	———	———	——
10	RN-MSP-141	Spring, azimuth adjustment	1
11	RN-MSC-313	Spring, for ill. ①	2
12	RN-MST-130	Spacer, for ill. ①	1
13	RN-MSC-259A	Spring, pinchroller pressure	1
14	RN-MKR-10	Pinchroller assembly (left)	1
15	RN-MKR-11	Pinchroller assembly (right)	1
16	RN-MKI-14A	Cassette loading mechanism (left)	1
17	RN-MKI-13A	Cassette loading mechanism (right)	1
18	RN-MUL-276C	Lever, cassette pack eject	1
19	RN-MRP-207	Roller, for ill. ⑱	2
20	RN-MSC-281B	Spring, for ill. ⑱ (right)	1
21	RN-MSC-282B	Spring, for ill. ⑱ (left)	1
22	RN-MWS-110	Washer	2
23	RN-MST-128	Roller	2
24	RN-MST-129	Roller	2
25	RN-MAS-90E	Chassis, main	1
26	RN-MYT-113A	Sub-chassis, slip mechanism mounting	1
27	RN-MKA-6C	Idler mechanism	1
28	RN-MRP-198A	Roller	2
29	RN-MUL-1018	Slide lever	1
30	RN-MSC-261	Spring, idler pressure	1
31	RN-MUL-243B	Lever	1
32	RN-MSC-287A	Spring, for ill. ㉛	1
33	RN-MIP-117	Insulator, IC_3 and IC_4	1
34	RN-MPM-880A	PC board, IC_3 and IC_4	1
35	RN-MET-238	Special screw, 2.6×4mm	3
36	RN-MST-133	Spacer, azimuth adjustment	1
37	RN-MET-280A	Special screw, azimuth adjustment	1
38	RN-MUL-216	Lever	2
39	RN-MRP-197A	Roller	2
40	RN-MSC-260A	Spring, idler pressure	1

Illus. No. (Fig. 7)	Stock No.	Description	Q'ty
41	RN-MSC-279	Spring, left	1
42	RN-MSC-280	Spring, right	1
43	RN-MUL-220	Lever, program changing	1
44	RN-MUL-219	Lever, program changing	1
45	RN-MUL-221	Lever, FF lever lock	1
46	RN-MSC-288	Spring	1
47	RN-MUL-222	Lever, S_1 changing	1
48	RN-MSC-264	Spring	1
49	RN-MHL-192	Holder, micro switch mounting	1
50	RN-MUF-26C	Flywheel with capstan	2
51	RN-MWP-85	Washer, for ill. ㊿	2
52	RN-MUB-1008	Belt, drive	1
53	RN-MKS-16C	Slip mechanism	2
54	RN-MWP-80A	Washer, for ill. 53	2
55	RN-MSC-267	Spring, back tension (left)	1
56	RN-MSC-268	Spring, back tension (right)	1
57	F6-SBD-2.3×15S	Screw, 2.3×15mm micro switch mounting	2
58	RN-MSC-291A	Spring, for ill. ㊹	1
69	F6-SW2NA-3×6S	Screw, 3×6mm	2
70	RN-MSC-308	Spring	1
ASSEMBLY MATERIAL			
60	F6-SBD-2×3S	Screw, 2×3mm, PC board (MPM-880A) mounting	3
61	F6-SBD-2×4S	Screw, 2×4mm, playback head mounting	1
62	F6-SBD-2.6×3S	Screw, 2.6×3mm, PC board (MPM-945A) and DC motor mounting	3
63	F6-SBD-2.6×4S	Screw, 2.6×4mm	1
64	F6-SBD-3×4S	Screw, 3×4mm, solenoid mounting	2
65	F6-ER-1.5	E-type ring, snap (for 1.5mm shaft)	6
66	F6-ER-2	E-type ring, snap (for 2mm shaft)	4
67	RN-MHJ-2	E-type ring, snap (for 1.5mm shaft)	2
68	RN-MHJ-3	E-type ring, snap (for 2mm shaft)	10

NOTE: Modifications reserved!