"TEN" — SP-2310

TOYOTA

AUDIO COMPONENT SERVICE MANUAL

CASSETTE TAPE PLAYER

VEHICLE	DESTINATION	PRODUCED AFTER	TOYOTA PART No.	FUJITSU TEN MODEL No.
CROWN	GENERAL COUNTRIES	September 1983	86260-30170	SP-2300
			86260-30180	SP-2310
	AUSTRALIA		86260-30180	SP-2310

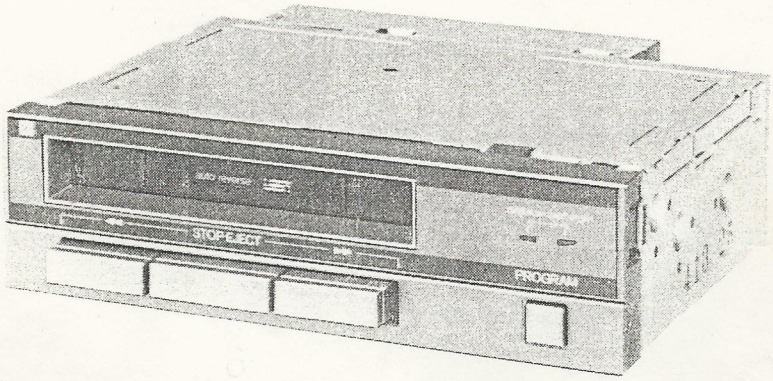

86260-30180 (SP-2310)

COMBINATION

GRADE	RADIO	PLAYER	SPEAKER	REMOTE CONTROL	ANTENNA
G (Super Saloon)	86120-30630 (AE-3041)	86260-30170 (SP-2300)	Front 4 ohm 6.3 watts 86160-30190 (RN-ESP-10RA-47A) ×2	Console Box 86170-30140 (UX-107)	86300-30340 Motor Antenna
	86120-30640 (AR-6030)		Rear 4 ohm 10 watts 86160-30170 (SA-1603A) ×2	Seat 86170-30100 (UX-103)	
Q (Royal Saloon)	86120-30630 (AE-3041)	86260-30180 (SP-2310)	Front 4 ohm 6.3 watts 86160-30190 (RN-ESP-10RA-47A) ×2	Console Box 86170-30140 (UX-107)	86300-30340 Motor Antenna
	86120-30640 (AR-6030)		Rear door 4 ohm 10 watts (R) 86160-30210 (SA-1211A) ×1 (L) 86160-30220 (SA-1212A) ×1	Seat 86170-30100 (UX-103)	
			Rear Woofer 8 ohm 10 watts 86160-30180 (SA-1604A) ×2		

Manufactured for TOYOTA

by *FUJITSU TEN LIMITED*

PUB. NO. SM-520

SPECIFICATIONS

NUMBER OF TRACK ..... 4-Track 2 channels
TAPE CARTRIDGE ..... Stereo/Monaural compact cassette
TAPE SPEED ..... 4.76 cm/sec. $\left(\begin{smallmatrix}+3\\-2\end{smallmatrix}\ \%\right)$
WOW & FLUTTER ..... 0.2% or better (WRMS)
CROSSTALK ..... 45 dB or better (at 1 kHz)
SEPARATION ..... 30 dB or better (at 1 kHz)
SIGNAL TO NOISE RATIO ..... 45 dB or better (at 1 kHz)
FREQUENCY RESPONSE ..... 0 $\begin{smallmatrix}+3\\-8\end{smallmatrix}$ dB (at 125 Hz)
0 dB (at 1 kHz) standard
0 $\begin{smallmatrix}+3\\-8\end{smallmatrix}$ dB (at 8 kHz)
LOAD IMPEDANCE ..... 6.8k ohm (per channels)
AUDIO OUTPUT LEVEL ..... 400 mV (per channels, 1 kHz 0 dB tape)
SEMICONDUCTORS ..... 5 ICs, 3 Transistors, 4 Diods
POWER INPUT ..... 12-volt car battery, negative terminal to ground
Voltage ..... 13.2 VDC
Current ..... Approx. 0.3A
TAKE-UP TORQUE ..... 40 to 70 g-cm
DIMENSIONS ..... 180(W)×50(H)×130(D)mm (7-3/32", 1-31/32", 5-1/8")
WEIGHT ..... 1 kg (2.2 lbs)

WOOFER AMPLIFIER UNIT

SIGNAL TO NOISE RATIO ..... 50 dB or better
INPUT IMPEDANCE ..... 1.4k ohm (per channels)
OUTPUT IMPEDANCE ..... 4 ohm (per channels)
FREQUENCY RESPONSE ..... −10 ± 3 dB (at 400 Hz) standard 0 dB 60 Hz
OUTPUT POWER ..... 6 watts min. RMS (at T.H.D.=10%) 60 Hz 4 ohm
POWER INPUT ..... 12-volt car battery, negative terminal to ground
Voltage ..... 13.2 VDC
Current ..... Approx. 1.5 Amperes (at output power 6 watts)
SEMICONDUCTORS ..... 1 IC, 1 Transistor, 2 Diods
DIMENSIONS ..... 123(W)×49(H)×29(D)mm (4-27/32", 1-15/16", 1-9/64")
WEIGHT ..... 0.15 kg (0.33 lbs)

CONNECTIONS

86260-30170 (SP-2300)

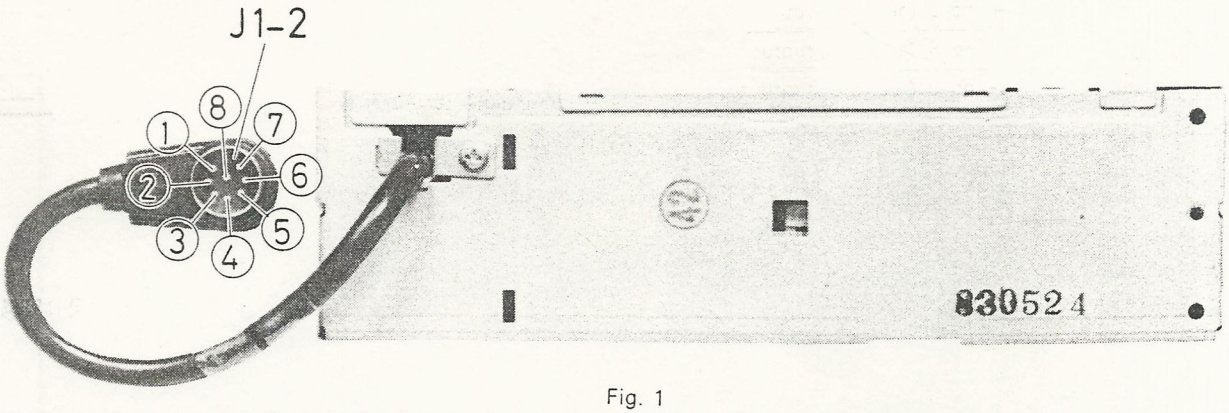

Fig. 1

J1-2 CONNECTOR					
1	Ground	(BRN)	5	Power supply output (radio)	(GRN)
2	Audio signal output (R ch)	(RED)	6	Power supply input (illumination)	(BLU)
3	Power supply output (radio amp.)	(BLK)	7	Power supply input (ACC)	(WHT)
4	Audio signal output (L ch)	(YEL)	8	Remote program changing	(GRY)

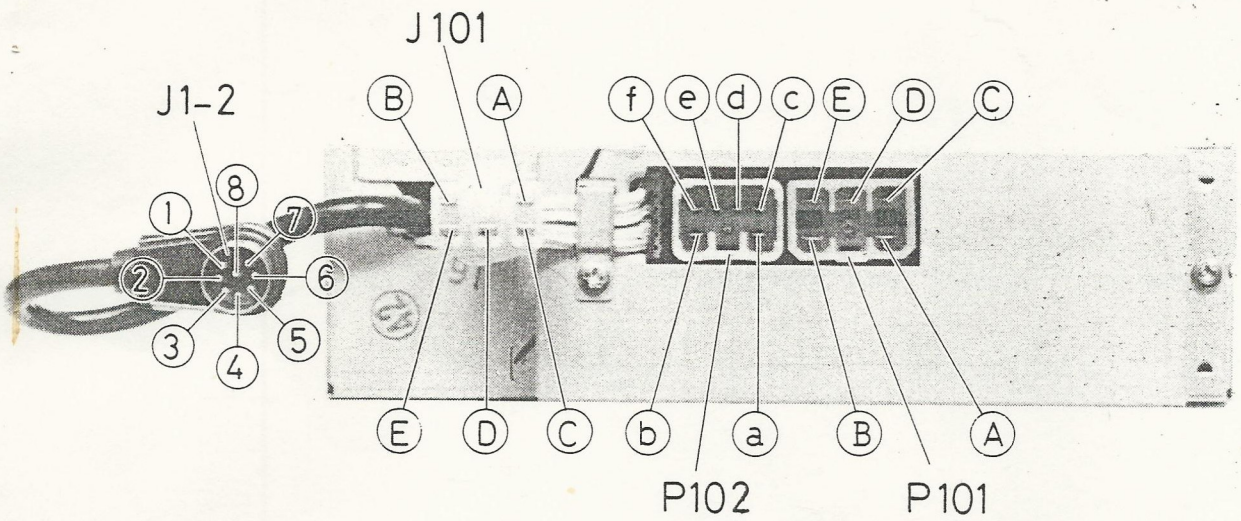

Fig. 2

J1-2 CONNECTOR					
1	Ground	(BRN)	5	Power supply output (radio)	(GRN)
2	Audio signal output (R ch)	(RED)	6	Power supply input (illumination)	(BLU)
3	Power supply output (radio amp.)	(BLK)	7	Power supply input (ACC)	(WHT)
4	Audio signal output (L ch)	(YEL)	8	Remote program changing	(GRY)

J101 CONNECTOR			
A	Audio signal input L ch +	D	Power supply input (back up)
B	Audio signal input R ch +	E	Audio signal input R ch −
C	Audio signal input L ch −		

P101 CONNECTOR			
A	Audio signal output (rear) L ch +	D	Power supply (back up)
B	Audio signal output (rear) R ch +	E	Audio signal output (rear) R ch −
C	Audio signal output (rear) L ch −		

P102 CONNECTOR			
A	Audio signal output (woofer) L ch +	D	Power supply input (amp. control)
B	Audio signal output (woofer) R ch +	E	NC
C	Audio signal output (woofer) L ch −	F	Audio signal output (woofer) R ch −

HOOK-UP

4 Speaker system

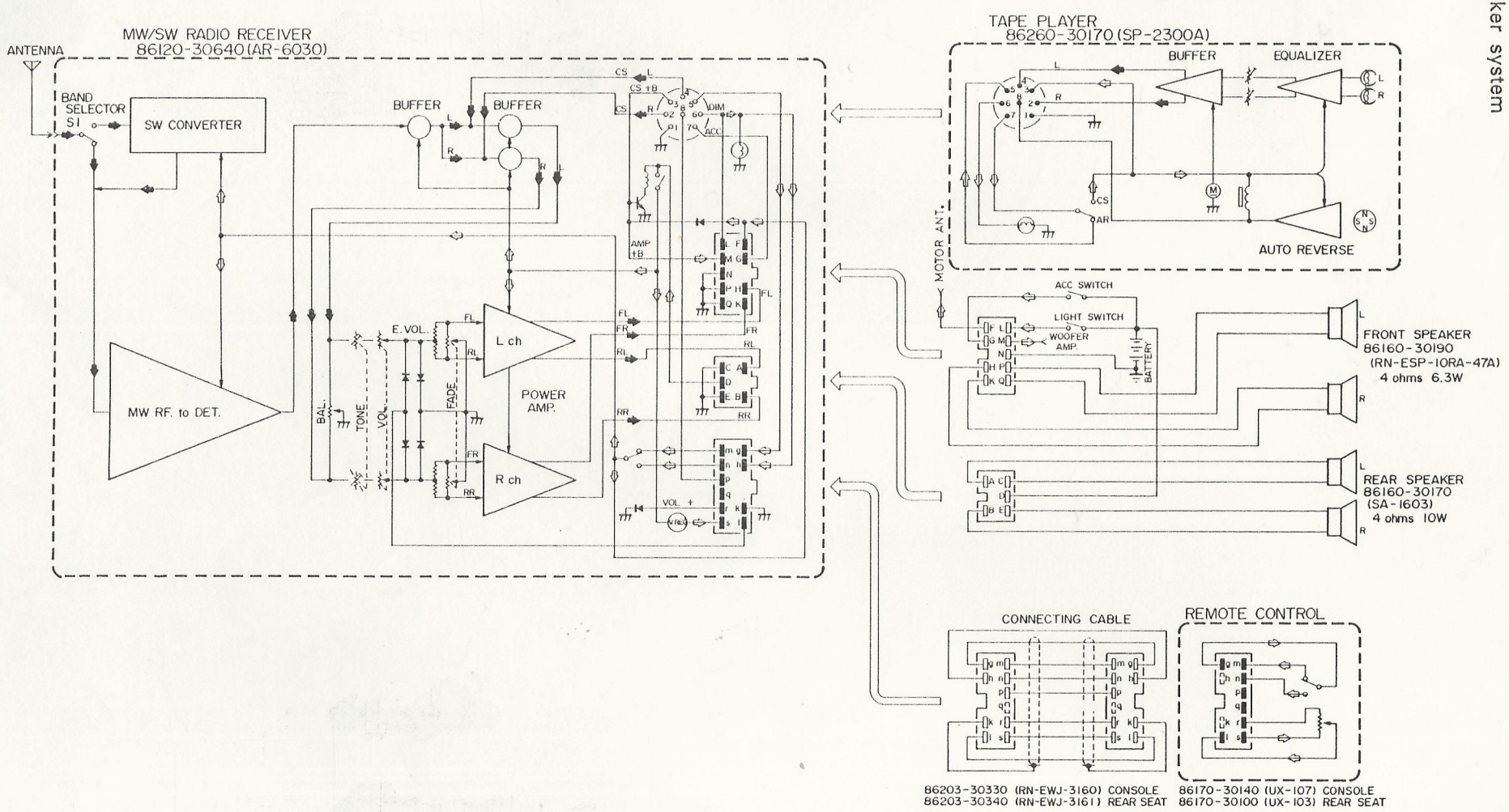

Fig. 3 (C32412300)

HOOK-UP

6 Speaker system

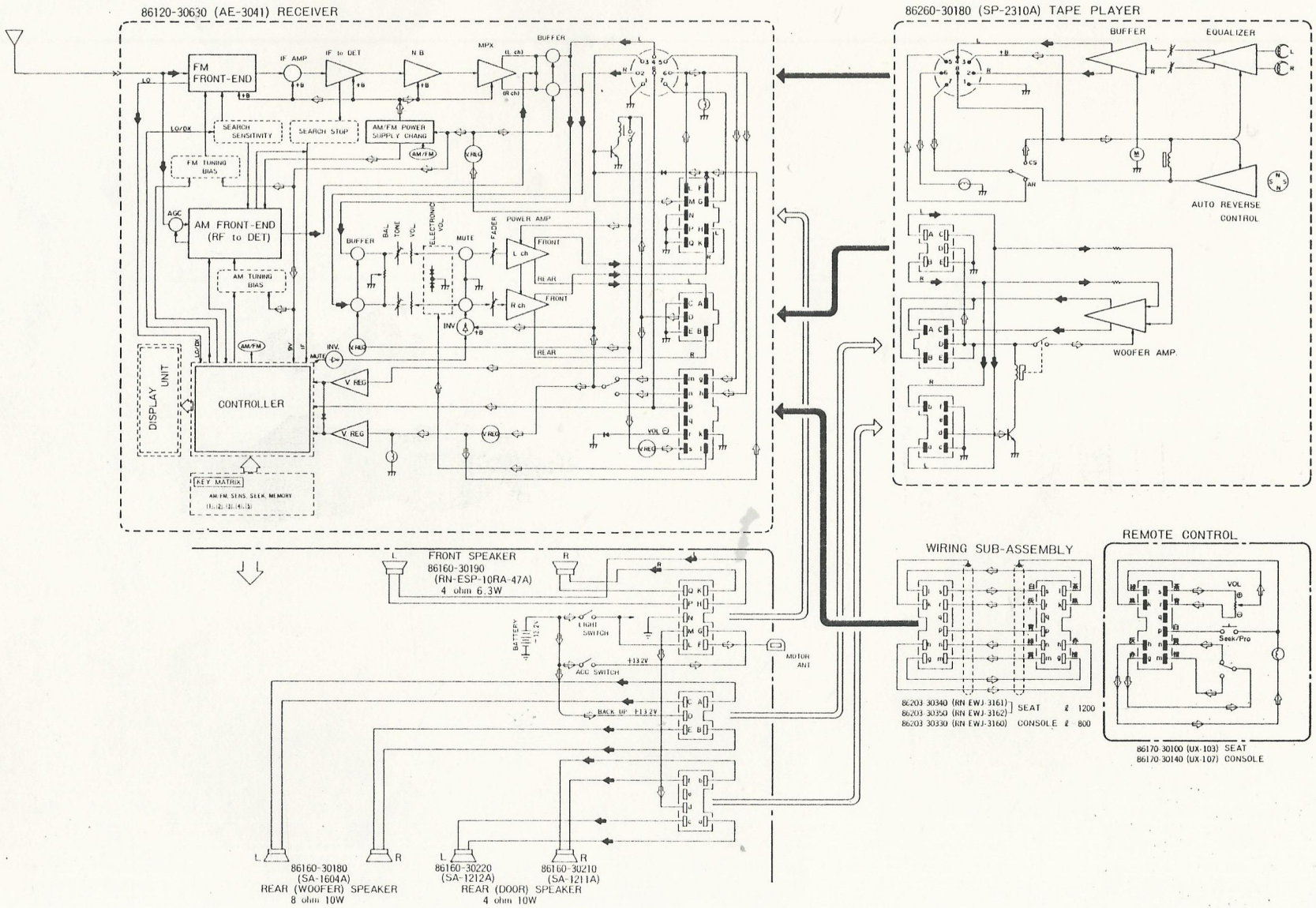

Fig. 6 (C32412300)

OUTPUT LEVEL ALIGNMENT

Caution

1. Short-circuit power stage ground and pre stage ground.
2. Adjust output level after head cleaning and azimuth alignment.

(1) Connection (Fig. 7)

a. Power Supply 13.2V

b. Test Tape (1 kHz, 0 dB full track)

(2) Alignment (Fig. 7)

STEP	ADJUSTMENT POINTS	PROCEDURE
1	RV 1	Adjust output of R channel to be 400 $^{+75}_{-60}$ mV
2	RV 2	Abjust output of L channel to be 400 $^{+75}_{-60}$ mV
3	—	Make sure the output levels of R channel and L channel are equal.

Note : Adjust output level of right and left channels both in forward and rewind play to be equal.

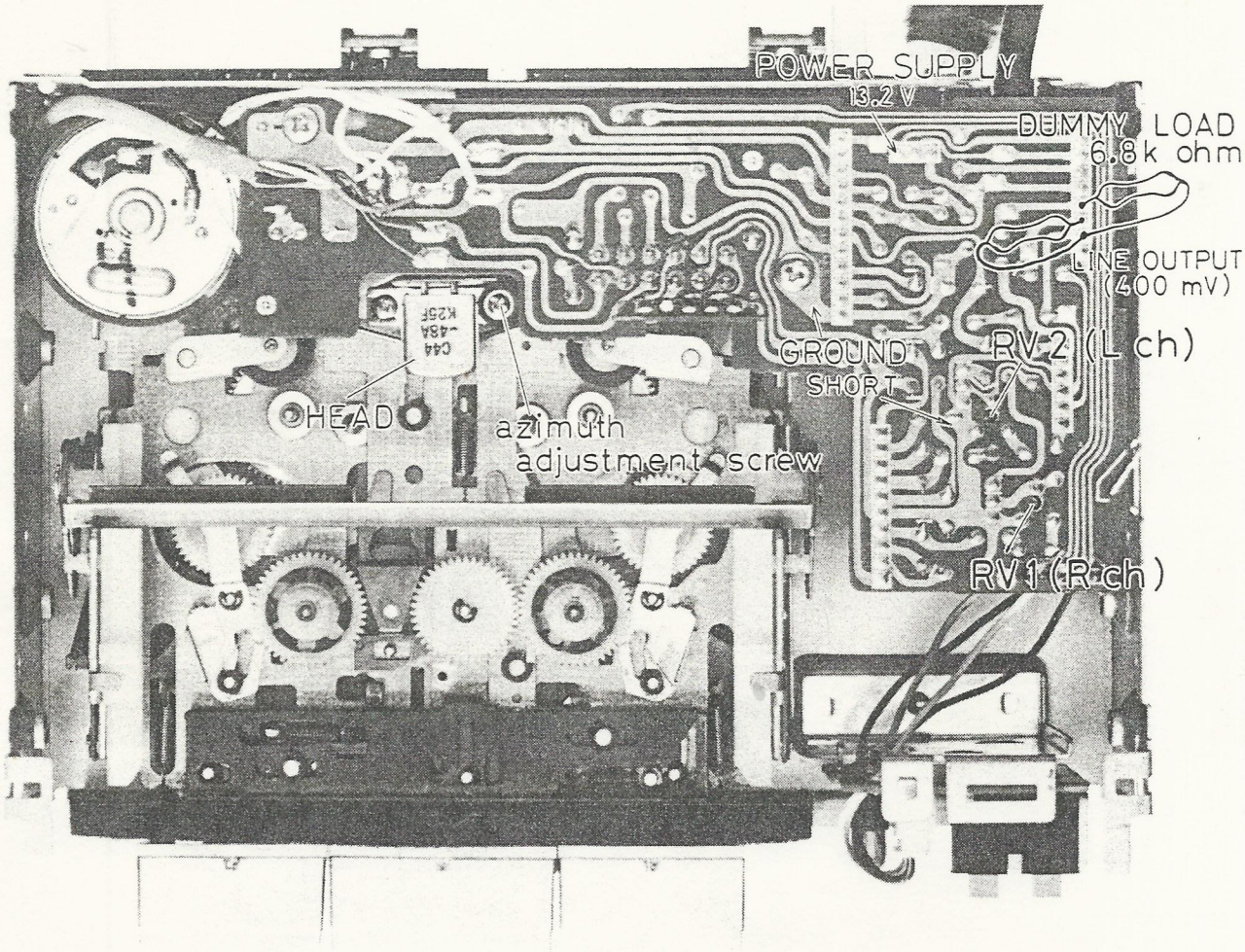

Fig. 7

ADJUSTMENT FOR TAKE-UP TORQUE

1. Measure the take-up torque by inserting the torque gauge cartridge into the slip mechanism.
2. The torque should be always between 40 and 70g-cm.
   The roller has four positions for the spring to be set.
3. Set the spring in one of ①-④ positions for the sufficient value. The take-up torque may vary 10g-cm per one step of the roller.

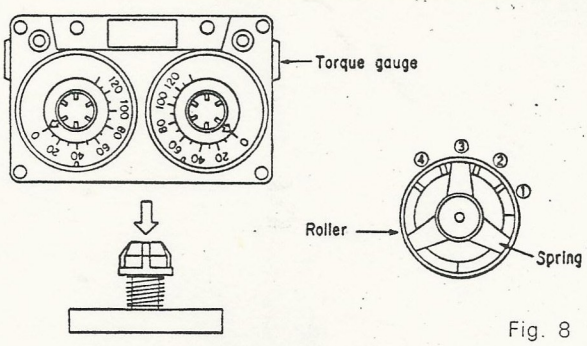

Fig. 8

PLAYBACK HEAD ADJUSTMENT (Azimuth)

1. Carefully adjust the azimuth adjust screw for maximum volume and treble tone without using test instrument.
2. If test tape is not available, use a stereo tape with some high treble tones and follow the same procedure as outlined above.

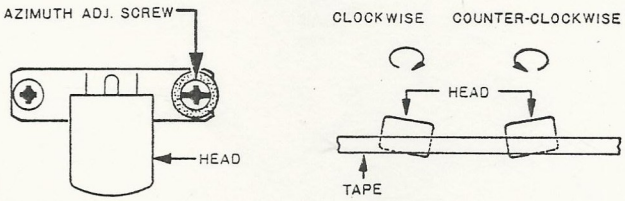

Fig. 9

EXCHANGE OF BELT

1. Remove holder by unscrewing screws [1] 2.6×3mm in the lower part of cassette deck and removing spring [2].
2. Remove screw [3] 2.6×3mm, spring [2] and holder to exchange belt.

EXCHANGE OF MOTOR

Unscrew screws [4] 2.6×3mm to exchange motor.

EXCHANGE OF SLIP MECHANISM

Remove E-type ring and washer [5] to exchange slip mechanism.

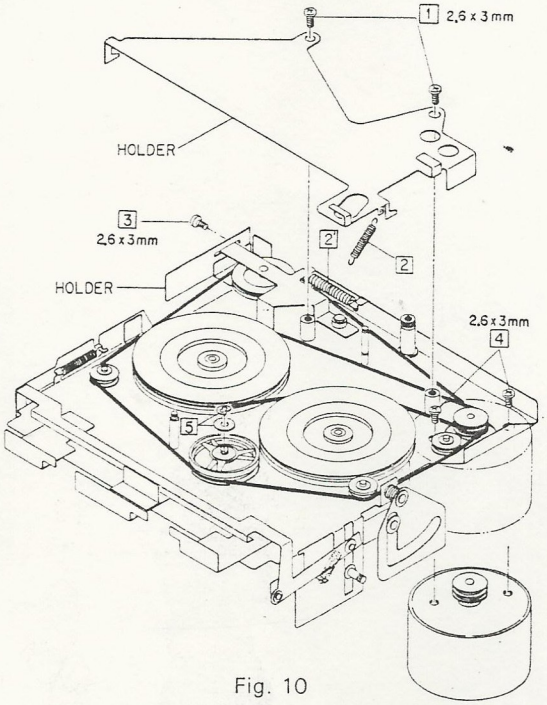

Fig. 10

EXCHANGE OF HEAD

1. Unscrew screws [6] 3×4mm and remove PC board.
2. Unscrew azimuth adjustment screw [7] 2×6mm and [8] 2×3mm and unsolder at flexible board to exchange head.

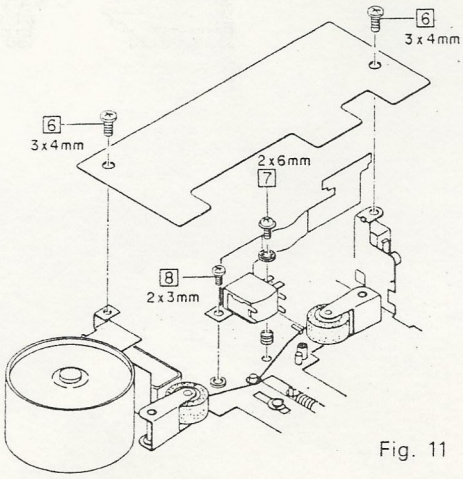

Fig. 11

CLEANING

After extended use, the tape playback head and the drive capstan will build up a layer of iron oxide from the tape. The oxide layer on the tape head prevents the tape from making full contact with the head and the result is a gradual loss of high frequency response and an increased noise level.

The oxide deposit on the capstan can cause slippage (wow) which might be mistaken for more serious mechanical drive problems.

A cleaner pen or similar object like the alcohol moistened swab is used.

First, using the end of a pencil, press the rod in the cassette door back until it gives a click sound.

Rub the parts such as playback head, capstan and pinchroller thoroughly to remove all traces of dirt and grime.

After cleaning, always remember to press the eject button to return the rod to former position.

Do not use a solvent such as lighter fuel or lacquer thinner, which may cause damage to plastic parts or to instrument finish.

DEMAGNETIZATION

The head may become magnetized over a period of time. A magnetized head will record noise on a tape even when it is being used for playback. It is important that the head be demagnetized periodically.

The head can be demagnetized with a commercial demagnetizer (or degausser, as it is sometimes called.)

Such an instrument is not expensive, and represents a good investment for the owner who wants to keep his equipment in the best possible condition.

EXPLODED VIEW (TAPE PLAYER)

[SP-2300]
[SP-2310]

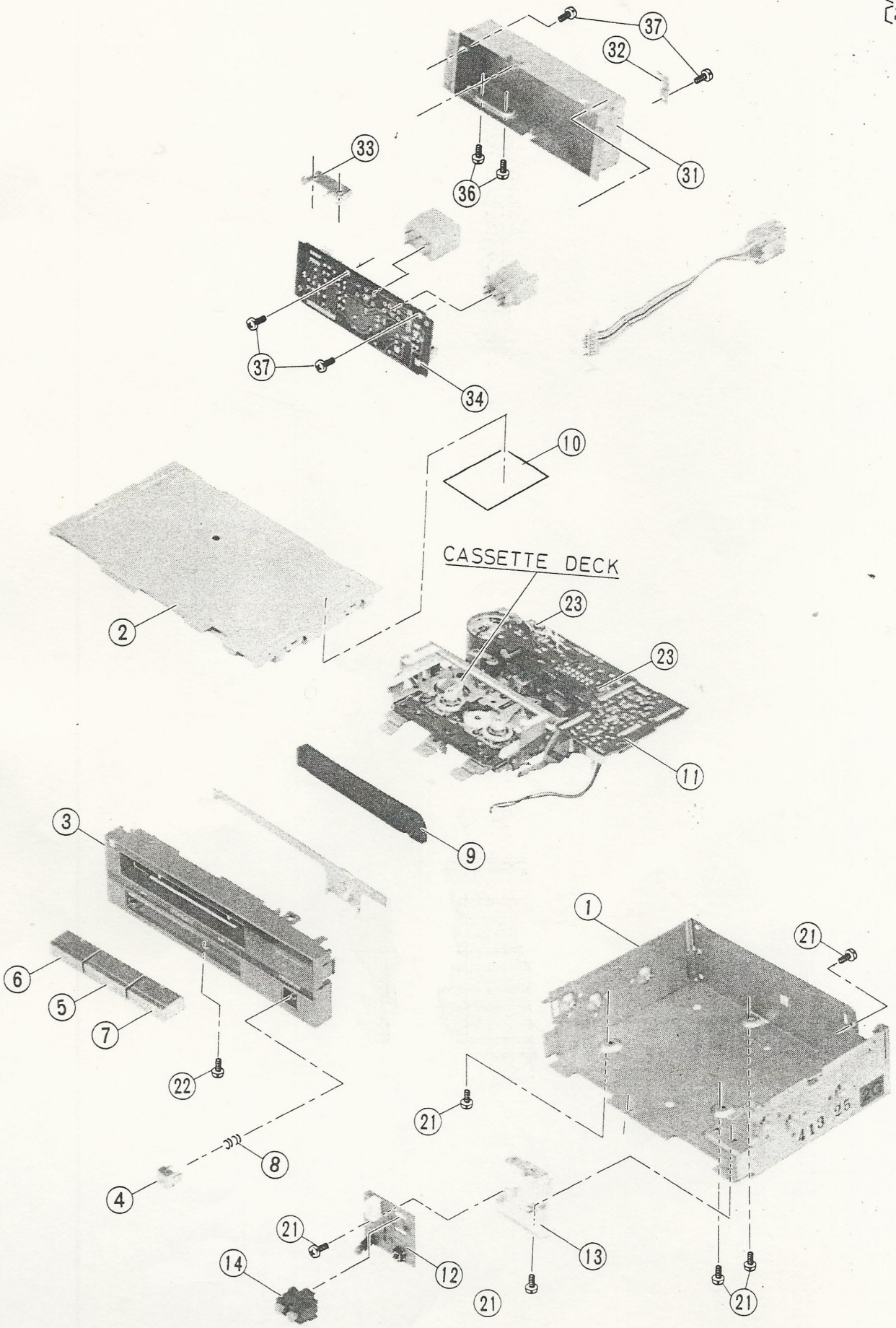

Fig. 12

EXPLODED VIEW (CASSETTE DECK MDK-45/5A)

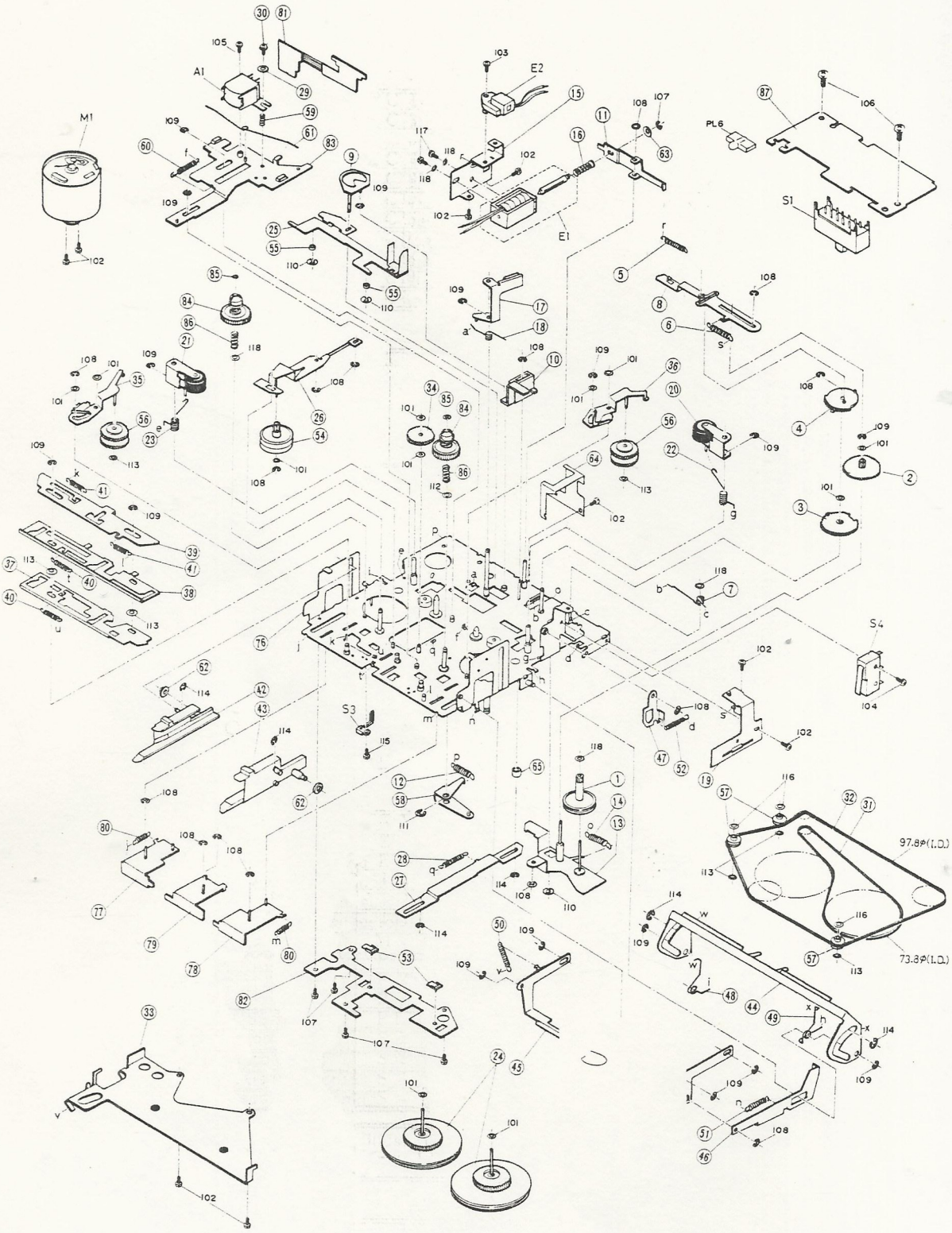

Fig. 13 (C28412300)

REPLACEMENT PARTS LIST

Note: Main replacement parts are marked ○ in the remarks column.

〔SP-2300〕
〔SP-2310〕

Symbol No.	Stock No.	Description				Remark
CAPACITORS						
C 1, 2	RN-ECK-DB101KY	100 pF	50V		ceramic	
C 3, 4, 12	RN-ECE-M101V10-31	100 μF	10V		electrolytic	
C 5, 6	RN-ECF-R223J50-11	.022 μF	50V		mylar	
C 7, 8	RN-ECE-MR47V50-32	.47 μF	50V		electrolytic	
C 9, 17	RN-ECE-M221V10-31	220 μF	10V		electrolytic	
C10, 11, 13, 14	RN-ECE-M1R0V50-32	1 μF	50V		electrolytic	
C15	RN-ECB-DOX103E	.01 μF	50V		ceramic	
C16	RN-ECH-R274V50	.27 μF	50V		metalized paper	
C18	RN-ECE-M220V16-52	22 μF	16V		electrolytic	
C19	RN-ECE-M330V16-52	33 μF	16V		electrolytic	
C20	RN-ECE-M471V16-51	470 μF	16V		electrolytic	
RESISTORS						
R 1, 2	RN-ERD-AE222JB	2.2k ohm	5%	¼W	carbon	
R 3	RN-ERD-AE391JB	390 ohm	5%	¼W	carbon	
R 4, 5	RN-ERD-AE103JB	10k ohm	5%	¼W	carbon	
R 6	RN-ERD-AE221JB	220 ohm	5%	¼W	carbon	
R 7	RN-ERD-AE102JB	1k ohm	5%	¼W	carbon	
R 8, 10	RN-ERC-AF2R2K	2.2 ohm	10%	½W	solid	
R 9	RN-ERD-AE471JB	470 ohm	5%	¼W	carbon	
VARIABLE RESISTORS						
RV 1, 2	RN-ERV-0N1-229	22k ohm	Adjust output level			
SEMICONDUCTORS						
IC 1	RN-EIE-EA9083	Equalizer amp., linear-monolithic				○
IC 2	RN-EIE-FN0001	Buffer amp., linear-monolithic				○
IC 3, 4	RN-EID-DN6838	Tape end detector, digital-monolithic				○
IC 5	RN-EIE-FN0002	Auto reverse control, linear-monolithic				○
Q 1, 2	RN-EVS-2SD655	Mute, silicon transistor				○
Q 3	RN-EVS-2SC2594	Solenoid (E2) control, silicon transistor				○
D 2, 3	RN-EDS-10E1	Spark suppression, silicon diode				○
D 4	RN-EDT-MZ309	Zener diode, 9V				○
D 5, 6	RN-EDP-SEL1321G	Tape direction indicator, Light Emiting diode				○
MISCELLANEOUS ELECTRICAL						
A 1	RN-EHM-C44-48A	Playback head (LTM)				○
E 1	RN-EEM-1008B	Flapper solenoid, head lock				
E 2	RN-EEM-1026	Plunger solenoid, program changing				
J 1	RN-EWJ-3196	Wiring sub-assembly with DIN 8P connector				
J 2	RN-EWJ-2288	Wiring sub-assembly with 3P connector				
J 3	RN-EWJ-3195	Wiring sub-assembly with 4P connector				
M 1	RN-EDM-1031	DC motor (includes motor pulley)				○
P 1	RN-EJU-S08V-567	8P connector				
P 2	RN-EJU-S03V-562	3P connector				
P 3	RN-EJU-S04V-563	4P connector				
PL 1	RN-EPM-1087A	Lamp assembly, 14V, 80mA				
S 1	RN-ESS-42-165	Slide switch, program changing				○
S 2	RN-ESB-1N1-171	Push switch, program changing				○
S 3	RN-ESL-1011B	Leaf switch, flapper solenoid control				○
S 4	RN-ESM-1004	Micro switch, power supply changing				○

Illus. No. (Fig. 12)	Stock No.	Description	Q'ty	Remark
MECHANICAL				
1	RN-MAD-1150	Chassis, main	1	
2	RN-MAD-1151	Cover, top	1	
3	RN-MDP-1314	Escutcheon (includes door shaft and spring)	1	○
4	RN-MYB-1263	Button, program changing	1	○
5	RN-MYB-1264	Button, stop & eject	1	○
6	RN-MYB-1265	Button, FF & REW (left)	1	○
7	RN-MYB-1266	Button, FF & REW (right)	1	○
8	RN-MSC-1109	Spring	1	
9	RN-MSE-1157	Covering the light plate, sponge (BLK)	1	
10	RN-MIP-1218	Insulator	1	
11	RN-MPC-1396A	PC board, main	1	
12	RN-MPC-1397	PC board, illumination	1	

Illus. No. (Fig. 12)	Stock No.	Description	Q'ty	Remark
13	RN-MHE-1279	Holder	1	
14	RN-MLC-1110	Covering the light plate	1	
ASSEMBLY MATERIAL				
21	F6-SBD-3×6S	Screw, 3×6mm	6	
22	F6-SSA-3×4S	Flat screw, 3×4mm	1	
23	F6-SBD-3×4S	Screw, 3×4mm	2	

WOOFER AMP. UNIT

Symbol No.	Stock No.	Description				Remark
CAPACITORS						
C101	RN-ECF-R104V50-J	.1 μF	50V		mylar	
C102	RN-ECE-M100V16-32	10 μF	16V		electrolytic	
C103	RN-ECF-R103V50-J	.01 μF	50V		mylar	
C104, 105	RN-ECE-M221V10-31	220 μF	10V		electrolytic	
C106, 107	RN-ECF-R473V50	.047 μF	50V		mylar	
C108	RN-ECE-M222V16-41	2200 μF	16V		electrolytic	
C109, 110	RN-ECK-DB222KY	2200 pF	50V		ceramic	
C111, 112	RN-ECK-DB221KY	220 pF	50V		ceramic	
RESISTORS						
R101, 102	RN-ERD-AE122JB	1.2k ohm	5%	¼W	carbon	
R103, 106	RN-ERD-AE221JB	220 ohm	5%	¼W	carbon	
R104	RN-ERD-AE184JB	180k ohm	5%	¼W	carbon	
R105	RN-ERD-AE183JB	18k ohm	5%	¼W	carbon	
R107	RN-ERD-AE472JB	4.7k ohm	5%	¼W	carbon	
R108, 109	RN-ERD-AE4R7JB	4.7 ohm	5%	¼W	carbon	
R110, 111	RN-ERD-AE103JB	10k ohm	5%	¼W	carbon	
SEMICONDUCTORS						
IC101	RN-EIC-LA4460	Power amp., (woofer) linear-monolithic				○
Q101	RN-EVS-2SC1317-QR	Control DC relay, silicon transistor				○
D101, 102	RN-EDS-10E1	Spark suppression, silicon diode				○
MISCELLANEOUS ELECTRICAL						
RY 1	RN-EED-1026	DC relay, switching, power supply				○
L 1	RN-ELL-326	Choke, filter, 1.6mH				
P101	RN-EJU-S05V-379	Connector, 5P				
P102	RN-EJU-S06V-824	Connector, 6P				
J101	RN-EWJ-3198	Wiring sub-assembly				

Illus. No. (Fig. 12)	Stock No.	Description	Q'ty	Remark
MECHANICAL				
31	RN-MHE-1282	Cover	1	
32	RN-MCC-1004	Clamp	1	
33	RN-MHE-1280	Holder	1	
34	RN-MPC-1398	PC board	1	
ASSEMBLY MATERIAL				
36	RN-MET-253	Special screw	2	
37	RN-MET-168	Special screw, 3×6mm	4	

CASSETTE DECK UNIT (MDK-45/5A)

〔SP-2300〕
〔SP-2310〕

Illus. No. (Fig. 13)	Stock No.	Description	Q'ty	Remark
ELECTRICAL PARTS				
A 1	RN-EHM-C44-48A	Playback head (LTM)	1	○
E 1	RN-EEM-1008B	Flapper solenoid	1	
E 2	RN-EEM-1026	Plunger solenoid	1	
M 1	RN-EDM-1031	DC motor (includes motor pulley)	1	○
S 1	RN-ESS-42-165	Slide switch	1	○
S 3	RN-ESL-1011B	Leaf switch	1	○
S 4	RN-ESM-1004	Micro switch	1	○
MECHANICAL				
1	RN-MUG-1035	Gear, tape direction chang No. 1	1	
2	RN-MUG-1036	Gear, tape direction chang No. 2	1	
3	RN-MUG-1037C	Gear, tape direction coang No. 3	1	
4	RN-MUG-1038D	Gear, tape direction chang No. 4	1	
5	RN-MSC-1089A	Spring, pressure channel changing	1	
6	RN-MSC-1090A	Spring, pressure channel changing	1	
7	RN-MSC-1092A	Spring, pressure playback head	1	
8	RN-MUL-1194	Lever assembly, channel changing	1	
9	RN-MUL-1094B	Lever, channel changing	1	
10	RN-MUL-1095B	Lever, gear stop	1	
11	RN-MUL-1096C	Lever, gear lock	1	
12	RN-MSC-1091A	Spring, pressure lever (MUL-1094B)	1	
13	RN-MUL-1097B	Holder, gear assembly	1	
14	RN-MSC-1093	Spring, pressure holder(MUL-1097B)	1	
15	RN-MHL-1016E	Holder, solenoid mounting	1	
16	RN-MSC-1228	Spring, pressure lever (MUL-1096C)	1	
17	RN-MUL-1098E	Lever, lock slide plate	1	
18	RN-MSC-1094	Spring, pressure lever (MUL-1098E)	1	
19	RN-MHL-1017C	Holder, gear assembly mounting	1	
20	RN-MKR-1009A	Pinchroller assembly (right)	1	
21	RN-MKR-1010A	Pinchroller assembly (left)	1	
22	RN-MSC-1096A	Spring, pressure pinchroller (right)	1	
23	RN-MSC-1097A	Spring, pressure pinchroller (left)	1	
24	RN-MUF-1007A	Flywheel with capstan	2	
25	RN-MUL-1099B	Lever assembly	1	
26	RN-MUL-1100C	Lever, slip mechanism mounting	1	
27	RN-MUL-1233	Lever	1	
28	RN-MSC-1098A	Spring, pressure lever (MUL-1219)	1	
29	RN-MST-133	Spacer, head azimuth screw	1	
30	RN-MET-233A	Special screw, head azimuth screw	1	
31	RN-MUB-1016	Belt	1	○
32	RN-MUB-1017	Belt	1	○
33	RN-MHU-1024A	Support, flywheel	1	
34	RN-MUG-1039	Gear,	1	
35	RN-MUL-1104C	Lever, FF gear mounting (left)	1	
36	RN-MUL-1105C	Lever, FF gear mounting (right)	1	
37	RN-MUC-1001C	Lever, FF lock	1	
38	RN-MUC-1002B	Lever, pressure leaf switch	1	
39	RN-MUC-1003C	Lever, FF stop	1	
40	RN-MSC-1101	Spring, pressure lever (MUC-1001C)	1	
41	RN-MSC-1103A	Spring, pressure lever (MUC-1003C)	1	
42	RN-MHG-1005A	Cassette loading mechanism (left)	1	
43	RN-MHG-1006A	Cassette loading mechanism (right)	1	
44	RN-MUL-1106D	Lever, cassette pack eject	1	
45	RN-MUL-1232	Lever, elevator element	1	
46	RN-MUL-1108	Lever, pressure micro switch	1	
47	RN-MUL-1109	Lever, pressure micro switch	1	
48	RN-MSC-1105D	Spring, elevator element (left)	1	
49	RN-MSC-1106D	Spring, elevator element (right)	1	
50	RN-MSC-1107B	Spring, elevator element (left)	1	
51	RN-MSC-1108C	Spring, elevator element (right)	1	
52	RN-MSC-1104	Spring, pressure lever (MUL-1109)	1	
53	RN-MHE-1090A	Holder, IC mounting	2	
54	RN-MKS-1007D	Slip mechanism, play	1	○
55	RN-MRP-1035	Roller	1	
56	RN-MKS-1008B	Slip mechanism, FF	1	○
57	RN-MRP-1059	Roller, pressure belt	3	
58	RN-MUL-1122	Lever	1	
59	RN-MSC-1118	Spring, head azimuth adjustment	1	
60	RN-MSC-1119	Spring, pressure slideplate	1	

Illus. No. (Fig. 13)	Stock No.	Description	Q'ty	Remark
61	RN-MSC-1123	Spring, pressure slideplate	1	
62	RN-MRP-189	Roller	2	
63	RN-MWS-110	Washer	1	
64	RN-MHU-1035B	Holder	1	
65	RN-MRP-1084	Roller	1	
76	RN-MAS-1041	Chassis, main	1	
77	RN-MUL-1239	Lever, FF (left)	1	
78	RN-MUL-1240	Lever, FF (right)	1	
79	RN-MUL-1241	Lever, eject	1	
80	RN-MSC-1244	Spring, pressure, lever (MUL-1239, MUL-1240)	2	
81	RN-MPM-2133A	PC board, playback head	1	
82	RN-MPM-2119D	PC board, IC 3, 4	1	
83	RN-MYT-1015D	Seldplat, playback head mounting	1	
84	RN-MUG-1057	Gear, roll-tape	2	
85	RN-MWP-80A	Washer	2	
86	RN-MSC-252	Spring, back tension	2	
87	RN-MPC-1396A	PC board, auto reverse	1	
ASSEMBLY MATERIAL				
101	RN-MWP-85	Washer (plastic)	8	
102	F6-SBD-2.6×3S	Screw, 2.6×3mm	9	
103	F6-SBD-2.6×6S	Screw, 2.6×6mm	1	
104	F6-SBD-2.3×8S	Screw, 2.3×8mm	1	
105	F6-SBD-2×3S	Screw, 2×3mm	1	
106	F6-SBD-3×4S	Screw, 3×4mm	2	
107	F6-SNA-2×1.5-M-N1	Screw, 2×1.5mm	4	
108	F6-ER-1.5	E-type ring, 1.5mm	20	
109	F6-ER-2	E-type ring, 2mm	15	
110	RN-MHJ-2	E-type ring, 1.5mm	3	
111	RN-MHJ-4	E-type ring, 4mm	1	
112	RN-MWP-79	Washer (plastic)	2	
113	RN-MWP-1024	Washer (plastic)	2	
114	RN-MHJ-3	E-type ring, 2mm	6	
115	F6-SNA-2×3S	Screw, 2×3mm	1	
116	RN-MWP-1025	Washer (plastic)	3	
117	F6-SNA-2.6×2.5S	Screw, 2.6×2.5mm	2	
118	RN-MWP-1039	Washer (plastic)	7	

NOTE: Specifications subject to change without prior notice.

PARTS AVAILABILITY

HOW TO ORDER REPLACEMENT PARTS

Replacement parts can be ordered from either a Parts Depot or directly from TOYOTA MOTOR CORPORATION. When ordering, please refer to the Replacement Parts List in this service manual to insure that you receive the correct part.

Please enter not only part number (s) but also unit number of TOYOTA car radio/car stereo in a REMARKS column of the order sheet.

TOYOTA
GENUINE PARTS **TOYOTA PARTS AND ACCESSORIES ORDER**

PAGE NO. _____ OF _____

TO OVERSEAS PARTS DEPARTMENT, TOYOTA MOTOR CORPORATION, NAGOYA, JAPAN

☐ WEEKLY AIR ORDER
☐ NEW PARTS ORDER FOR MODEL: .....
☐ OTHERS: .....
☐ EMERGENCY AIR ORDER
☐ PRINTED MATTER

DATE | 8 O | ORDER NO.

AIR FREIGHT

TO (PORT)

1 CD 3	4 DIST F D CODE 10	11 ORDER NO. 18	19 H L
DA5	9		2

TOYOTA'S COLUMNS

20 ITEM NO. 23	24 PART NO. 38	39 QTY 44	45 TRF 47	48 LOCATION 55	56 指定価格 64	65 引当指示日 70	REMARKS
	RN-EIE-EA9083						86260-30170

TOYOTA'S COLUMNS

U. S. A — FUJITSU TEN PARTS DEPOT

LOS ANGELES
FUJITSU TEN CORP. OF AMERICA
19281 PACIFIC GATEWAY DRIVE, TORRANC,
CALIFORNIA 90502, U. S. A.
PHONE: (213) 327-2151. 770-4180

CANADA — FUJITSU TEN PARTS DEPOT

ONTARIO
FUJITSU TEN CORP. OF AMERICA CANADIAN BRANCH
1145 BELLAMY ROAD, SCARBOROUGH, ONTARIO, CANADA
PHONE: (416) 431-9332

EUROPE — FUJITSU TEN PARTS DEPOT

DÜSSELDORF
FUJITSU TEN (EUROPE) GmbH
D-4000 DÜSSELDORF. BERLINER ALLEE 56.
WEST GERMANY
PHONE: (0221) 370234, 370235 TLEX.: 8588519

OTHER COUNTRIES

Please order from the Overseas Parts Department, TOYOTA MOTOR CORPORATION using the normal Parts & Accessories Order Form for ordering automobile parts.

AUSTRALIA — FUJITSU TEN PARTS DEPOT

VICTORIA
PHILIPS SERVICE
CARROL ROAD. OAKLEIGH SOUTH. 3167
PHONE: 542-3502

NEW SOUTH WALES
PHILIPS SERVICE
46 WYONG ROAD. LAMBTON. NEWCASTLE 2299
PHONE: 52-3044

443 CONCORD ROAD. RHODES (SYDNEY) 2138
PHONE: 73-0231

AUSTRALIAN CAPITAL TERRITORY
PHILIPS SERVICE
86 WENTWORTH AVENUE. KINGSTON 2604
PHONE: 95-0321

QUEENSLAND
PHILIPS SERVICE
55 FORBES STREET, BRISBANE. (WEST END) 4101
PHONE: 44-8011

38 PUNARI STREET, TOWNSVILLE. (CURRAJONG) 4812
PHONE: 79-7422

SOUTH AUSTRALIA
PHILIPS SERVICE
81-97 FLINDERS STREET, ADELAIDE 5000
PHONE: 223-2999

WESTERN AUSTRALIA
PHILIPS SERVICE
1 FREDEICK STREET. BELMONT. 6104
PHONE: 321-5131

TASMANIA
PHILIPS SERVICE
2A PIERCE STREET, MOONAH 7009 (HOBART)
PHONE: 28-0121

TOYOTA MOTOR CORPORATION
OVERSEAS SERVICE DEPARTMENT

Printed in Japan

WIRING ON PC BOARDS

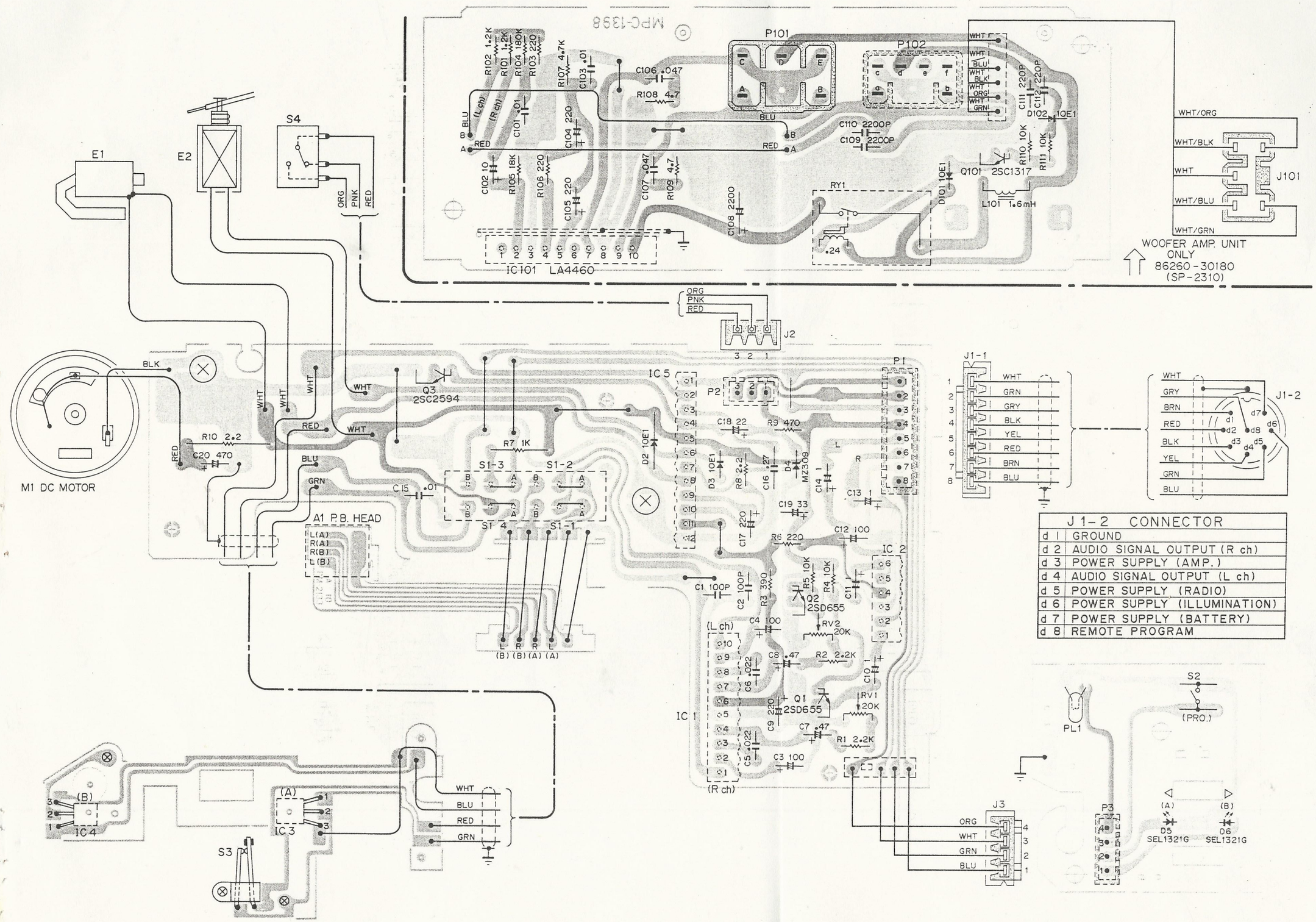

J 1-2	CONNECTOR
d 1	GROUND
d 2	AUDIO SIGNAL OUTPUT (R ch)
d 3	POWER SUPPLY (AMP.)
d 4	AUDIO SIGNAL OUTPUT (L ch)
d 5	POWER SUPPLY (RADIO)
d 6	POWER SUPPLY (ILLUMINATION)
d 7	POWER SUPPLY (BATTERY)
d 8	REMOTE PROGRAM

(Unit : V)

IC No. \ Pin No.	1	2	3	4	5	6	7	8	9	10	11	12
I C 1	0	.7	.8	3.4	0	7	3.4	.8	.7	0	/	/
I C 2	.75	3.8	0	7.7	3.8	.75	/	/	/	/	/	/
I C 3, 4	13	0	0 to 6.8	/	/	/	/	/	/	/	/	/
I C 5	1.6	0 to 6.8	1.4	0	13	13	0	0	9.3	13	8.6	0
I C101	0	0	0	2.6	2.6	5.6	6.4	0	6.4	13.2	/	/

	Q 1, 2	Q 3	Q101
Emitter	0	0	0
Base	0	0	0
Collector	0	13	13

Fig. 5 (C24412300) A1

SCHEMATIC

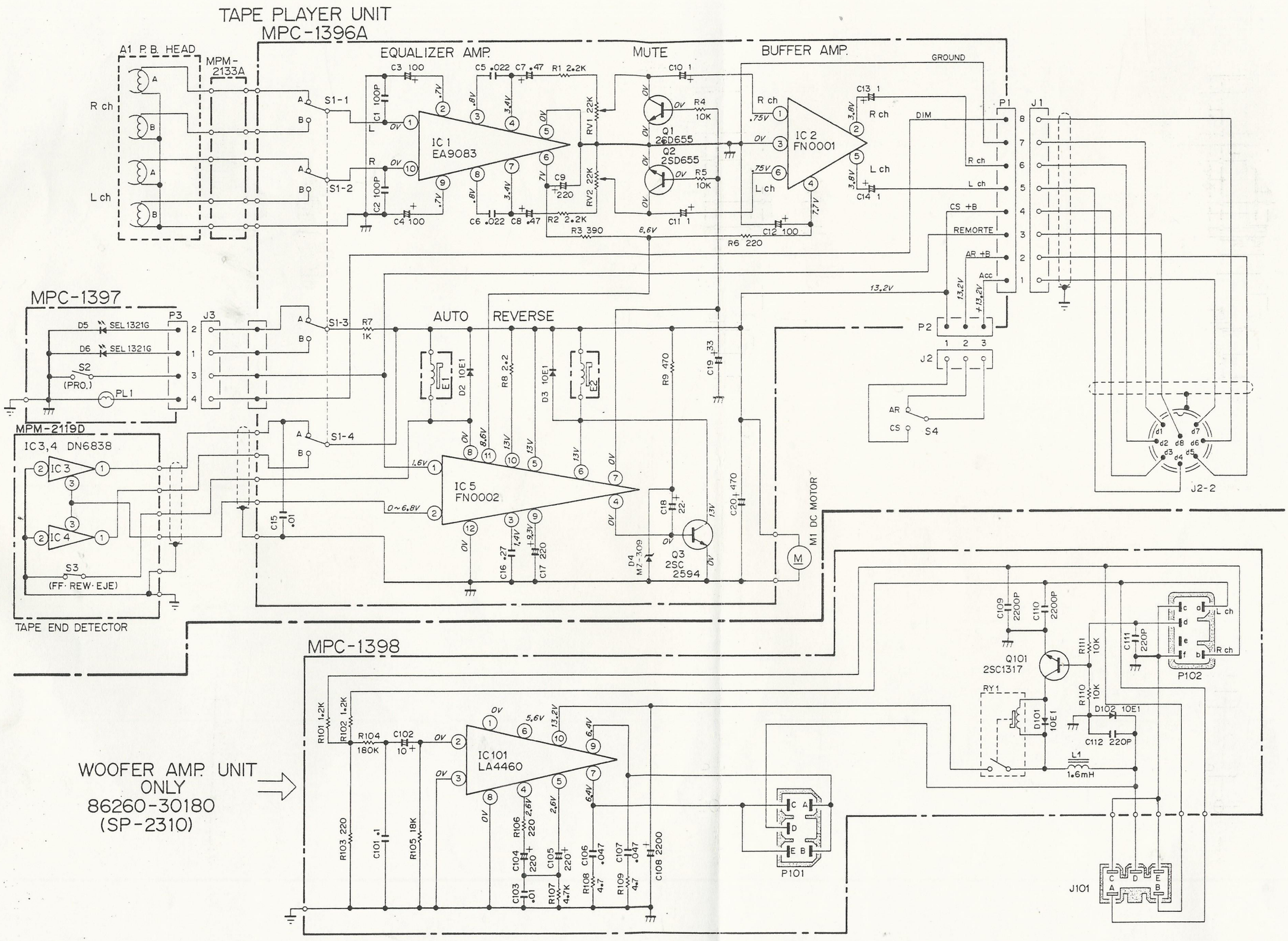

NOTES: 1. All capacitance in Micro farad, $P=10^{-12}$

2. All resistance in ohm, $K=10^{3}$

Fig. 4 (C24412300) A1

3. All inductance in henly, $m=10^{-3}$, $\mu=10^{-6}$

4. DC voltage against the chassis measured with 100k ohm/volt meter, power supply set at +13.2 VDC, no signal input.