TOSHIBA

STEREO MUSIC SYSTEM

SM-2100

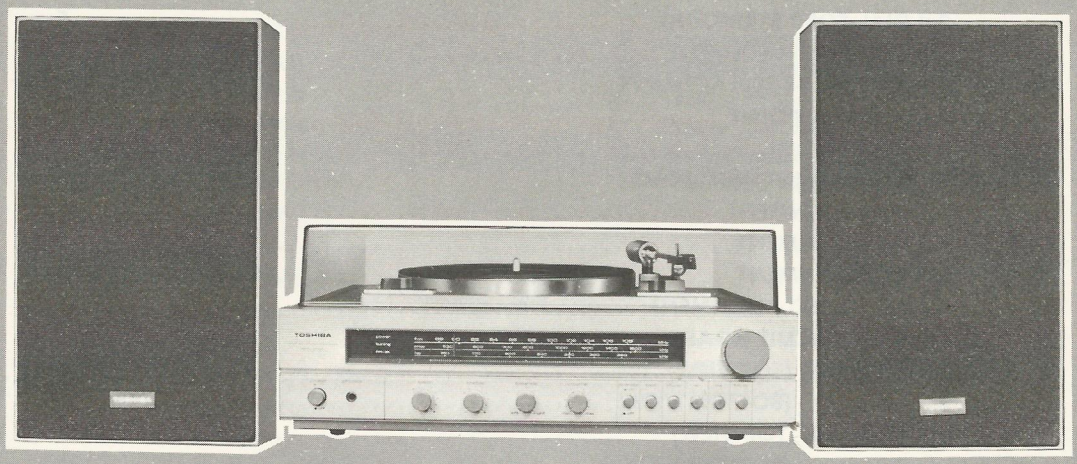

SPECIFICATIONS

RF UNIT

Wave Bands:	LW 150 — 380 KHz
	MW 525 — 1605 KHz
	FM 88 — 108 MHz
Intermediate Frequencies:	AM 455 KHz
	FM 10.7 MHz
Aerials:	Main Aerial for FM
	Ferrite Aerial for LW and MW

AF UNIT

Sine-Wave Power:	2 × 8 Watts at 1 % Dist.

PLAYER

Drive System:	Rim Drive System, Auto-return, Auto-cut.
Motor:	2 pole Induction Motor
Turntable:	25 cm (10") Diameter
Speeds:	33-1/3 & 45 r.p.m.
Tone Arm:	Pipe Arm
Cartridge:	Ceramic Type C-37C
Stylus:	N-6C

GENERAL

Power Source:	Alternating Current 220 V/240 V 50 Hz
Power Consumption:	60 W at Full Modulation
Dimensions:	460(W) × 200(H) × 370(D) mm 18-11/16"(W) × 7-7/8"(H) × 14-9/16"(D)
Total Weight:	8 kg. (17.6lbs)

SPEAKER UNIT

Speakers:	16 cm(6-1/2"), 5 cm(2") × 2 (2 way System)
Impedance:	8 ohms
Dimensions:	215(W) × 380(H) × 173(D) mm 8-15/32"(W) × 14-31/32"(H) × 6-13/16"(D)
Total Weight:	4 kg. (8.8 lbs)

TABLE OF CONTENTS

1. OPERATING INSTRUCTIONS
1-1 FRONT VIEW 3
1-2 BACK VIEW 3
2. DISASSEMBLY INSTRUCTIONS
2-1 PLAYER REMOVAL 4
2-2 CABINET REMOVAL 4
2-3 CHASSIS REMOVAL 5
2-4 DIAL CORD STRINGING 5
2-5 STYLUS REPLACEMENT 6
2-6 CARTRIDGE REPLACEMENT 6
3. ALIGNMENT POINT
3-1 RADIO UNIT 7
4. ALIGNMENT INSTRUCTIONS
4-1 MW ALIGNMENT 8
4-2 LW ALIGNMENT 9
4-3 FM ALIGNMENT 10
4-4 FM STEREO ALIGNMENT 11
5. PRINTED CIRCUIT BOARDS
5-1 AF BLOCK (TOP VIEW) 12
(BOTTOM VIEW) 13
5-2 RF BLOCK (TOP VIEW) 14
(BOTTOM VIEW) 15
5-3 IF BLOCK (TOP VIEW & BOTTOM VIEW) 16
5-4 SUPPLY BLOCK (PLAYER) (TOP VIEW & BOTTOM VIEW) 17
5-5 ATTENUATOR BLOCK (PLAYER) (TOP VIEW & BOTTOM VIEW) 18
6. SEVERAL PARTS CONNECTIONS 19
7. SCHEMATIC DIAGRAM
7-1 IF BLOCK 20
7-2 GENERAL ..... 21 — 22
8. EXPLODED VIEW
8-1 GENERAL 23
8-2 PLAYER 24
9. EXPLODED VIEW PARTS LIST
9-1 PLAYER 25
9-2 GENERAL 26
10. ELECTRICAL PARTS LIST ..... 27 — 29

1. OPERATING INSTRUCTIONS

1-1 FRONT VIEW

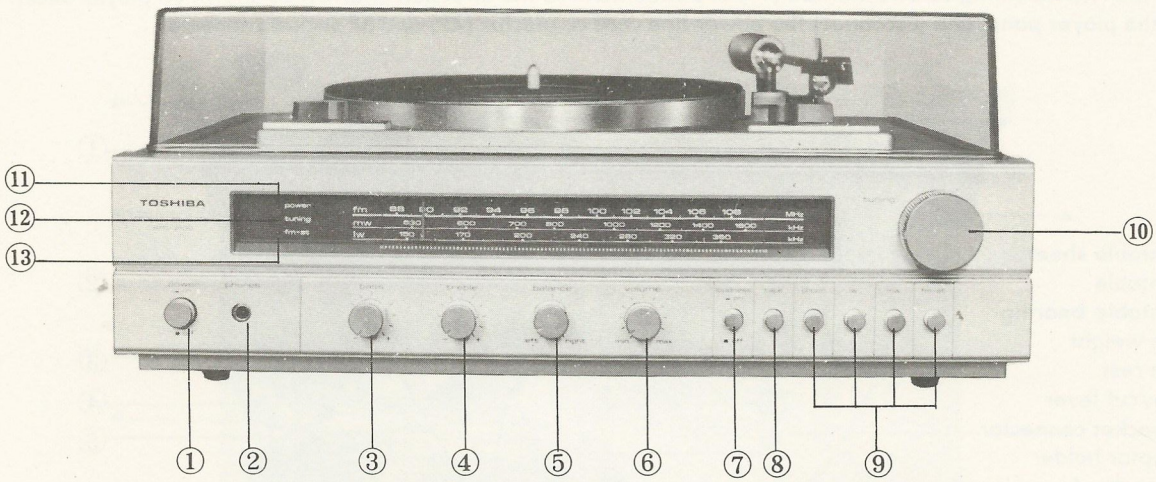

1. Power switch
2. Headphone jack
3. Bass control knob
4. Treble control knob
5. Balance control knob
6. Volume control knob
7. Loudness switch
8. Tape switch
9. Selector Buttons
10. Tuning knob
11. Power indicator lamp
12. Tuning indicator lamp
13. FM-stereo indicator lamp

Figure 1

1-2 BACK VIEW

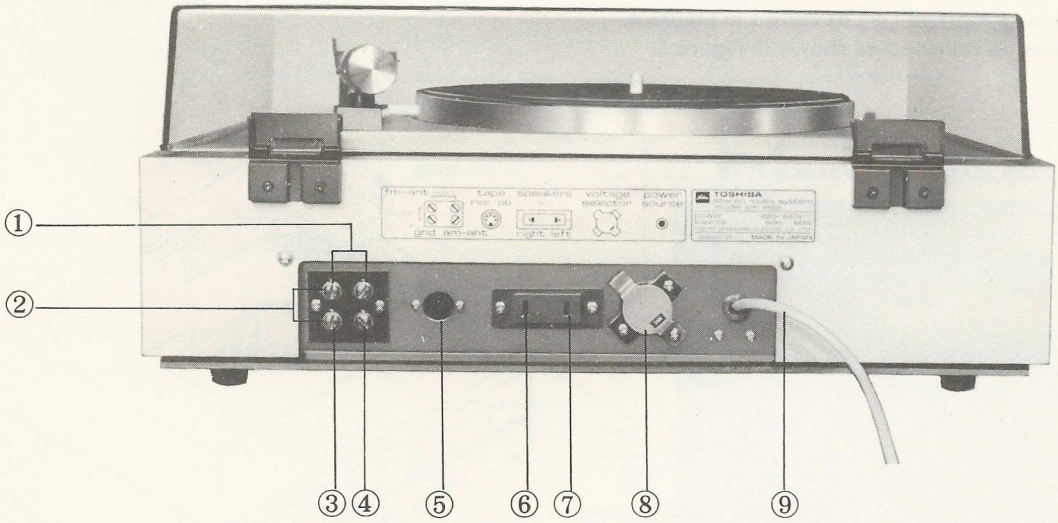

1. FM aerial (300 ohms)
2. FM aerial (75 ohms)
3. Ground
4. AM aerial
5. Tape DIN 5P socket
6. Speaker jack (Right)
7. Speaker jack (Left)
8. Volt selector switch
9. AC power cord

Figure 2

2. DISASSEMBLY INSTRUCTIONS

2-1 PLAYER REMOVAL

a) Lift up the turntable sheet and turntable.
b) Loosen the two mounting screws marked (※) and slide them to the direction of arrow as shown on player deck.
c) Lift up the player panel and disconnect the power line cord connector (4P) and 3P socket connector.

1. Turntable sheet
2. Turntable
3. Turntable bearing
4. Arm weight
5. Arm rest
6. Play/cut lever
7. 3P socket connector
8. Adaptor holder
9. Idler wheel
10. Speed change lever
11. Motor pulley
12. Power line cord connector

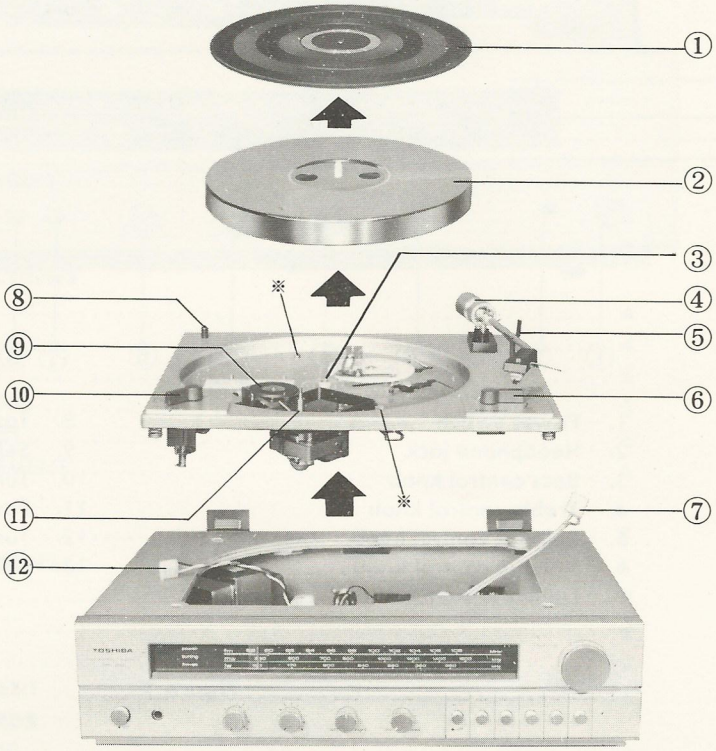

Figure 3

2-2 CABINET REMOVAL

a) Remove the six screws marked (★) as shown in Figure 4.
b) The cabinet can now be removed as shown in Figure 5.

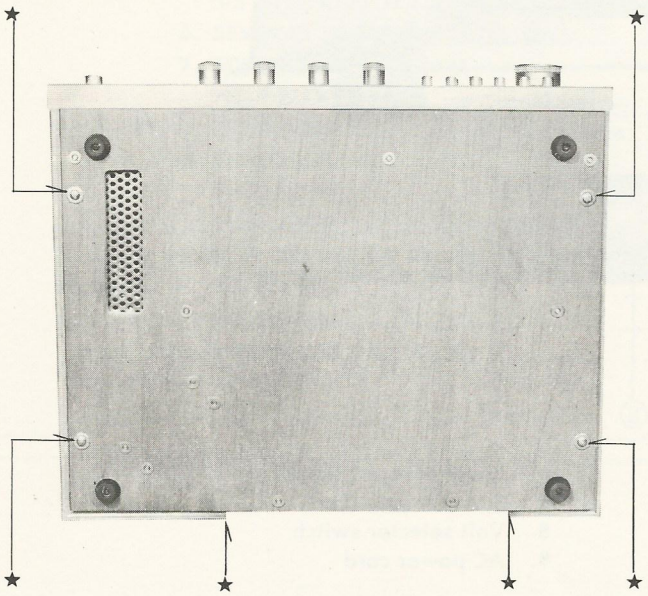

Figure 4

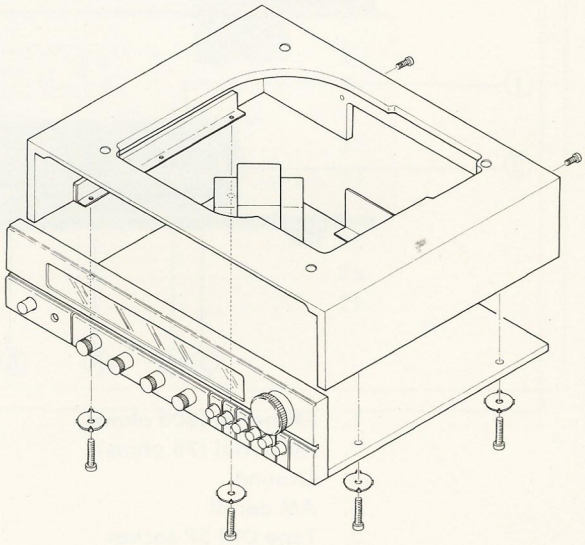

Figure 5

2-3 CHASSIS REMOVAL

a) Remove the cabinet. (See 2-2)
b) Remove the five screws marked (★) as shown in Figure 6 and the chassis can now be returned.

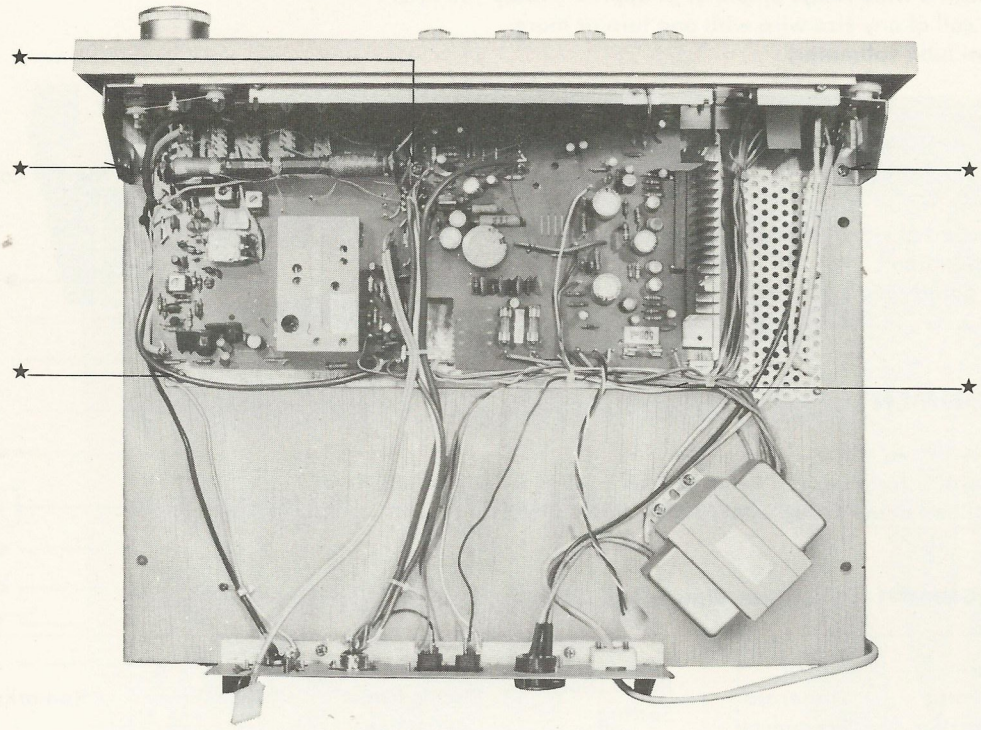

Figure 6

2-4 DIAL CORD STRINGING

a) Set the tuning capacitor to the minimum capacitance (fully clockwise position).
b) Wind the dial cord in the numerical sequence as shown in Figure 7.

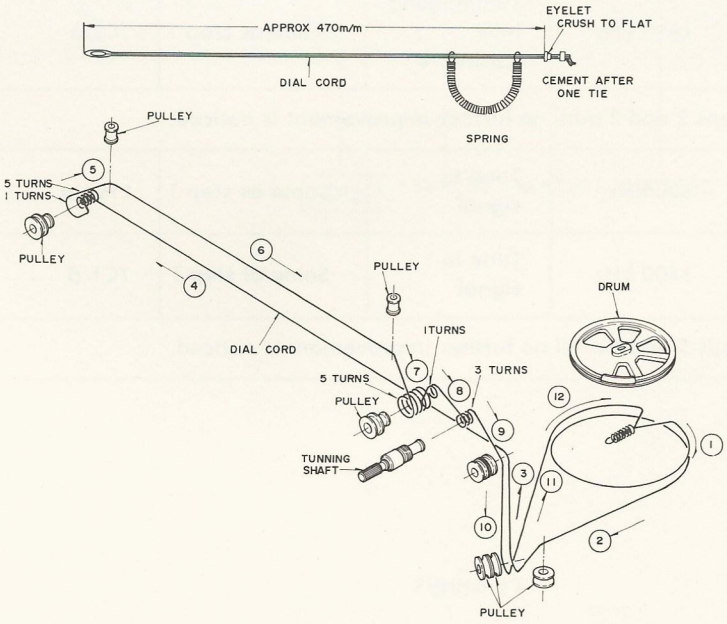

Figure 7

2-5 STYLUS REPLACEMENT

Life of the stylus attached to the cartridge is approximately 300 hours, and longer use of it may result, not only in considerable distortion, but also in damage to the record. You had better replace it with a new one at the earliest possible time after 300 hours. Exchange of a stylus can be done as shown in Figure 8.

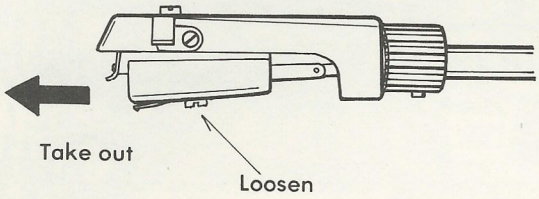

Figure 8

2-6 CARTRIDGE REPLACMENT

When the cartridges are changed, tune to the minimum volume position of the amplifier.

a) Next, exchange the cartridges Figure 9 illustrate the method for removing. To replace cartridge follow in reverse order.
b) Remove the four clips from cartridge. (Figure 10 is writing)
c) Adjust the stylus pressure when finishing the cartridge replacement.

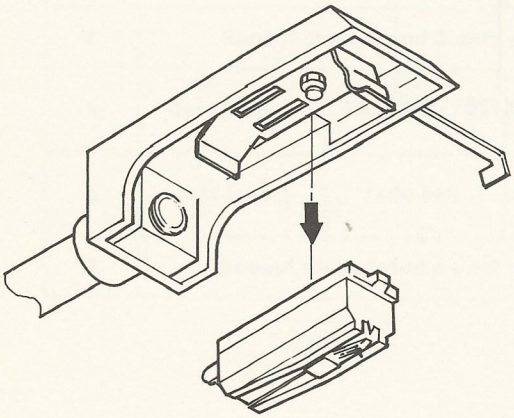

Figure 9

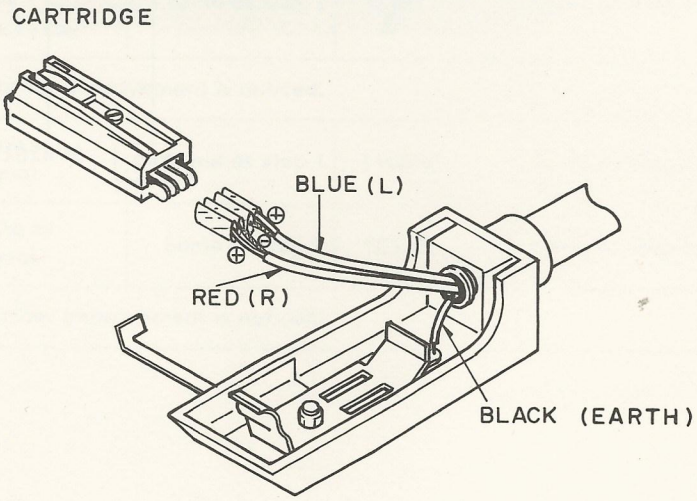

Figure 10

3. ALIGNMENT POINT

3-1 RADIO UNIT

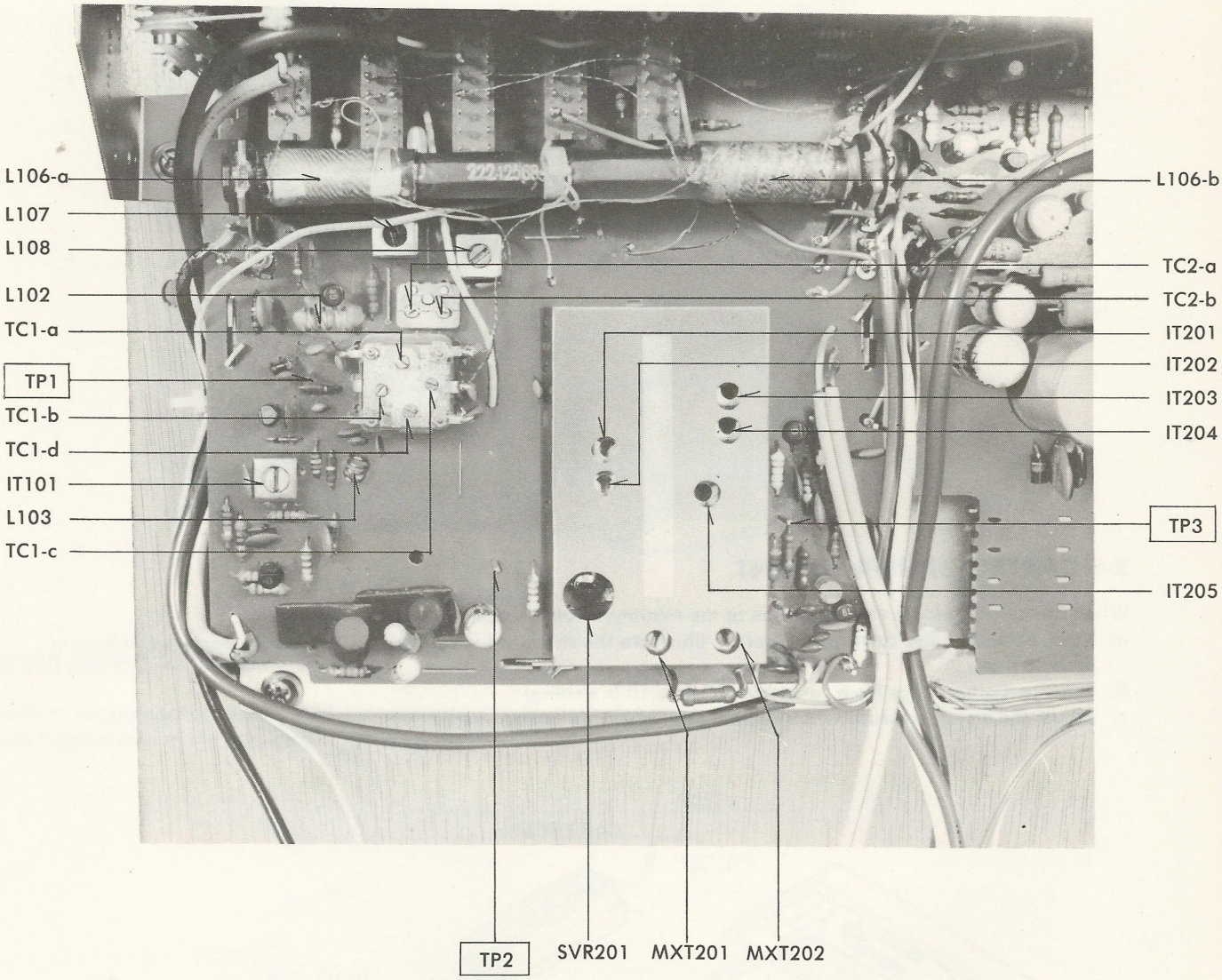

Figure 11

4. ALIGNMENT INSTRUCTIONS

1. Sweep signal generator (Sweep range of at least 300 kHz, center frequency of 10.7 MHz.)
2. Signal generator with a frequency range of at least from 140 kHz to 1.7 MHz for AM, from 87 MHz to 110 MHz and 10.7 MHz for FM.
3. Oscilloscope with a wide range amplifier of approximately 100 kHz.
4. Test loop — a coil of any size wire with one turn or more.
5. VTVM (Vacuum tube voltmeter)

NOTES:

1. During alignment keep the signal generator output at the lowest level where useable from the set can be maintained.
2. Ground connection of signal generator .... To chassis ground.
3. Generator modulation .... 400 Hz, 30%.
4. For alignment points, see schematic diagram.

4-1 MW ALIGNMENT

1. Set SELECTOR switch to MW.
2. Set signal generator frequency as listed in TABLE 1 MW ALIGNMENT CHART.
3. Proceed as outlined in the TABLE 1 MW ALIGNMENT CHART.

TABLE 1 MW ALIGNMENT CHART (See Figure 12)

Step	Signal Generator Connection	Signal Generator Frequency	Radio Dial Setting	Meter or Oscilloscope Connection	Adjustment	Remarks
1	Test loop	455 kHz	Tuning gang fully counter-clockwise	VTVM across voice coil	IT 203 IT 204 IT 205	Adjust for Maximum
2	Test loop	505 kHz	Same as step1	Same as step 1	L107	Same as step 1
3	Test loop	1650 kHz	Tuning gang fully clockwise	Same as step 1	TC2-a	Same as step 1
4	Repeat steps 2 and 3 until no further improvement is noticed.					
5	Test loop	600 kHz	Tune to signal	Same as step 1	L106-a	Same as step 1
6	Test loop	1400 kHz	Tune to signal	Same af step 1	TC1-d	Same as step 1
7	Repeat steps 5 and 6 until no further improvement is noticed.					

4-2 LW ALIGNMENT

1. Set SELECTOR switch to LW.
2. Set signal generator frequency as listed in TABLE 2 LW ALIGNMENT CHART.
3. Proceed as outlined in the TABLE 2 LW ALIGNMENT CHART.

TABLE 2 LW ALIGNMENT CHART (See Figure 12)

Step	Signal Generator Connection	Signal Generator Frequency	Radio Dial Setting	Meter or Oscilloscope Connection	Adjustment	Remarks
1	Test loop	145 kHz	Tuning gang fully counter-clockwise	VTVM across voice coil	L 108	Adjust for maximum
2	Test loop	385 kHz	Tuning gang fully clockwise	Same as step 1	TC 2-b	Same as step 1
3	Repeat steps 1 and 2 until no further improvement is noticed.					
4	Test loop	170 kHz	Tune to signal	Same as step 1	L106-b	Same as step 1
5	Test loop	340 kHz	Tune to signal	Same as step 1	TC 1-c	Same as step 1
6	Repeat steps 4 and 5 until no further improvement is noticed.					

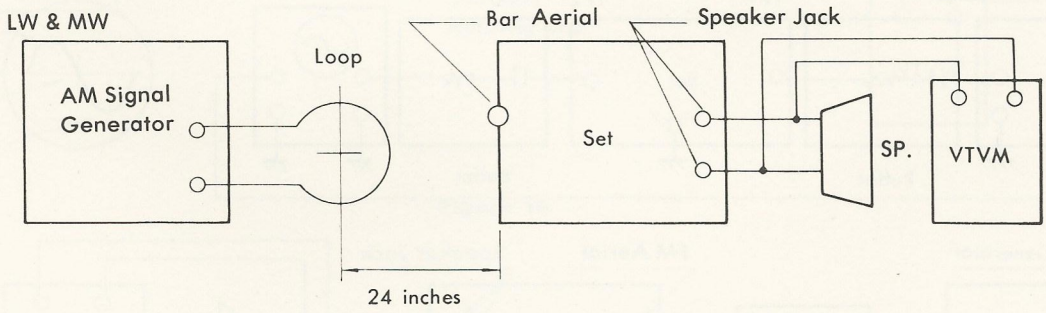

Figure 12

4-3 FM ALIGNMENT

1. Set SELECTOR switch to FM-st.
2. Set signal generator frequency as listed in TABLE 3 FM ALIGNMENT CHART.
3. Proceed as outlined in the TABLE 3 FM ALIGNMENT CHART.

TABLE 3 FM ALIGNMENT CHART (See Figure 13)

Step	Signal Generator Connection	Signal Generator Frequency	Radio Dial Setting	Meter or Oscilloscope Connection	Adjustment	Remarks
1	Sweep Generator through buffer to TP 1	10.7 MHz	Tuning gang fully counter-clockwise	Scope to TP 2 as shown in Figure 13.	IT 101 IT 201 IT 202	See "S curve" in Figure 13.
2	300 ohms matching pad	87.7 MHz	Same as step 1	VTVM across voice coil	L 103	Adjust for Maximum
3	Same as step 2	109. 5 MHz	Tuning gang fully clockwise	Same as step 2	TC 1-b	Same as step 2
4	Repeat steps 2 and 3 until no further improvement is noticed.					
5	Same as step 2	90 MHz	Tune to signal	Same as step 2	L 102	Same as step 2
6	Same as step 2	106 MHz	Tune to signal	Same as step 2	TC 1-a	Same as step 2
7	Repeat steps 5 and 6 until no further improvement is noticed.					

CAUTION:
When realigning the FM Receiving Frequency, the lower side of the frequency range must be below 87.5 MHz in order to comply with FTZ regulations in West Germany.

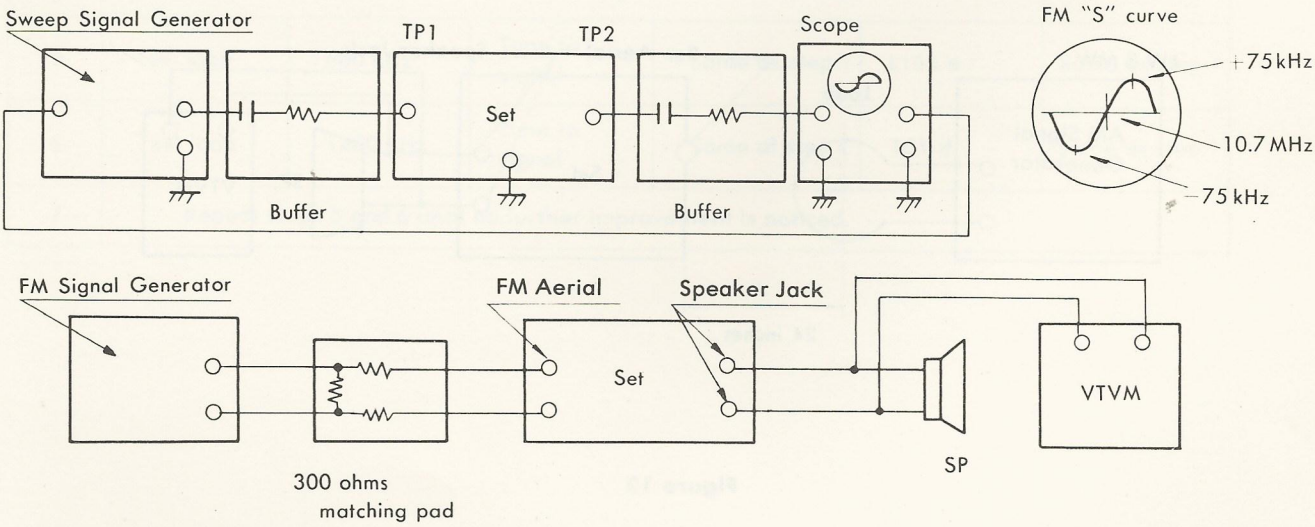

Figure 13

4-4 FM STEREO ALIGNMENT

General Alignment conditions
1. RF signal input should be about 60 dB (1 mV).
2. Set tuning gang to quiet point on dial.

Note:
Set the deviation meter by the signal of L = R and switch mode desired.

TABLE 4 FM STEREO ALIGNMENT CHART (See Figure 14)

Step	Modulation Frequency	Modulation Mode setting	Modulation level setting	Output Indicator connection	Adjustment	Remarks
1	1000 Hz	Stereo L with pilot	45 % (33.75 kHz) 10% (pilot) (7.5 kHz)	Oscilloscope or VTVM across voice coil of L ch.	MXT 201 MXT 202 slightly	Adjust for maximum
2	1000 Hz	Stereo R with pilot	Same as step 1	Same as step 1	SVR 201 5K ohm Semi-fixed resistor slightly (separation)	Adjust for minimum

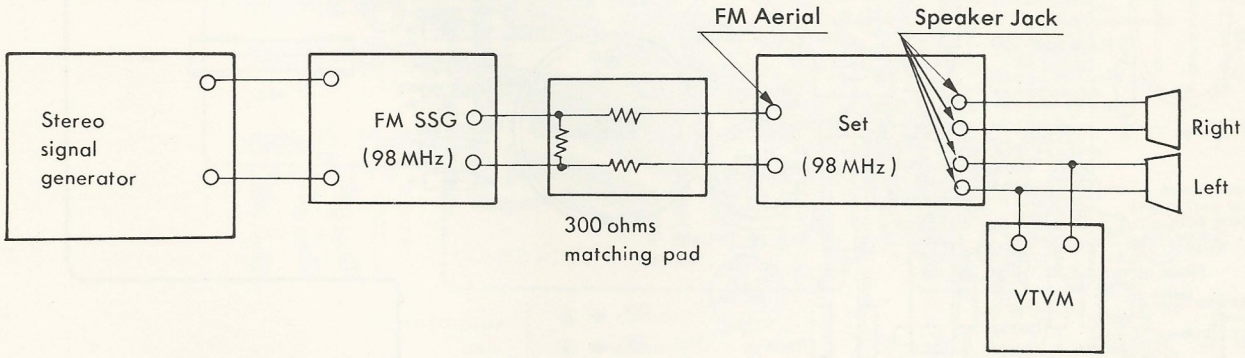

Figure 14

5. PRINTED CIRCUIT BOARDS

5-1 AF BLOCK

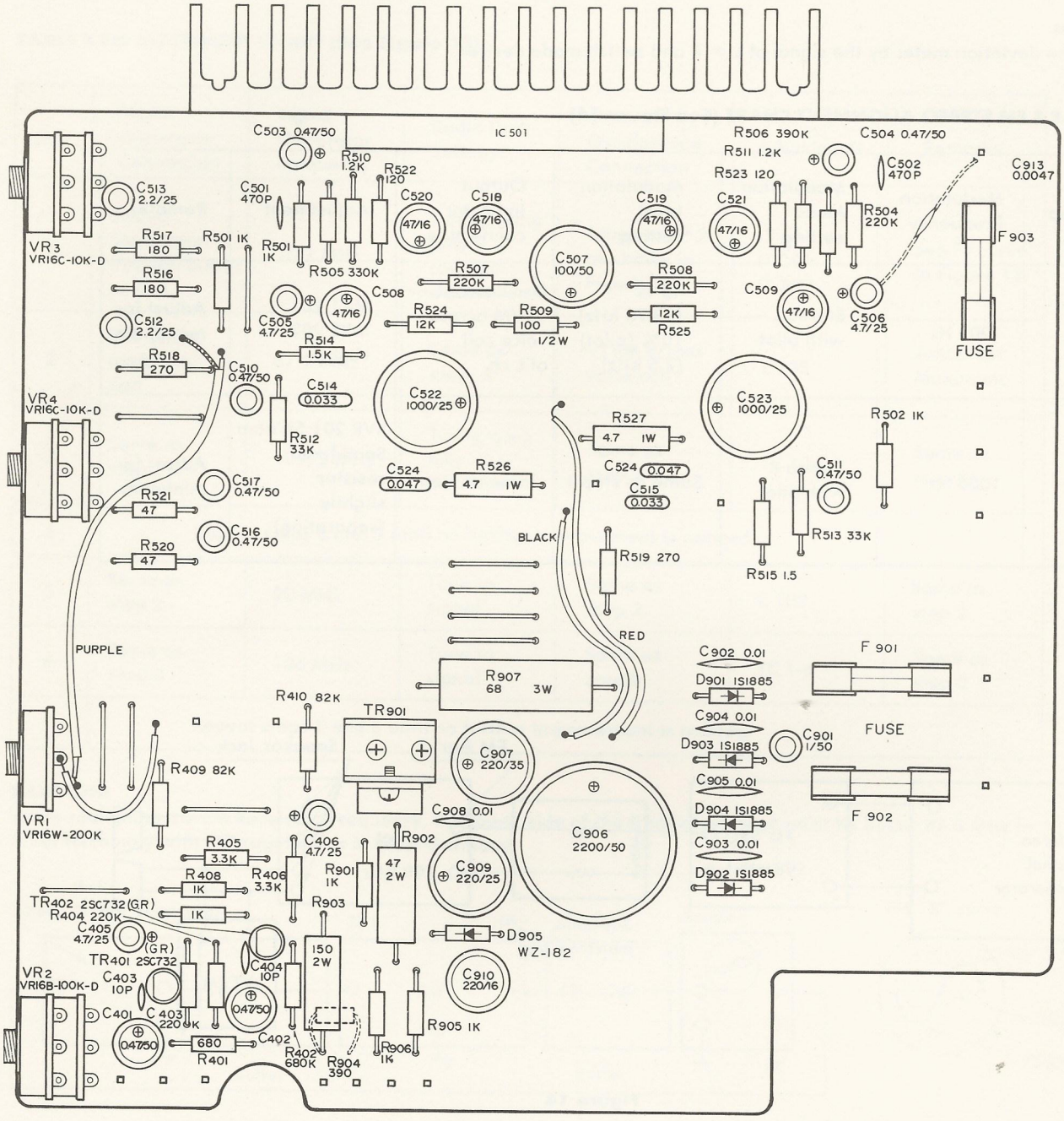

TOP VIEW (PCB-1)

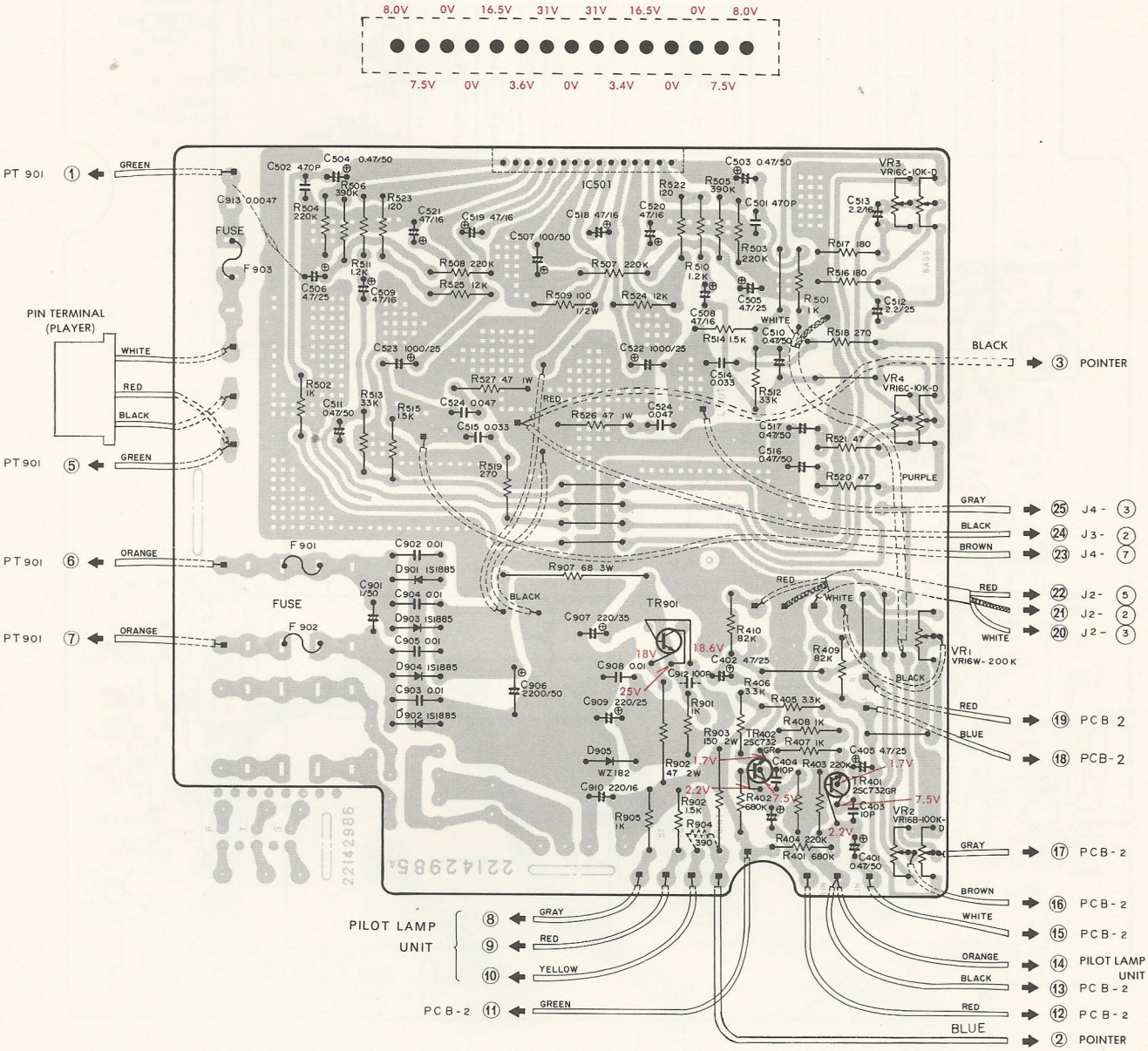
8.0V 0V 16.5V 31V 31V 16.5V 0V 8.0V
7.5V 0V 3.6V 0V 3.4V 0V 7.5V
PT 901 ① GREEN
PT 901 ⑤ GREEN
PT 901 ⑥ ORANGE
PT 901 ⑦ ORANGE
PIN TERMINAL (PLAYER)
WHITE
RED
BLACK
FUSE
F 903
F 901
F 902
IC501
TR901
TR402 2SC732
TR401 2SC732GR
VR3 VR16C-10K-D
VR4 VR16C-10K-D
VR1 VR16W-200K
VR2 VR16B-100K-D
BASS
③ POINTER
GRAY ㉕ J4-③
BLACK ㉔ J3-②
BROWN ㉓ J4-⑦
RED ㉒ J2-⑤
㉑ J2-②
WHITE ⑳ J2-③
RED ⑲ PCB 2
BLUE ⑱ PCB-2
GRAY ⑰ PCB-2
BROWN ⑯ PCB-2
WHITE ⑮ PCB-2
ORANGE ⑭ PILOT LAMP UNIT
BLACK ⑬ PCB-2
RED ⑫ PCB-2
BLUE ② POINTER
PILOT LAMP UNIT
⑧ GRAY
⑨ RED
⑩ YELLOW
PCB-2 ⑪ GREEN
22142985

BOTTOM VIEW

5-2 RF BLOCK

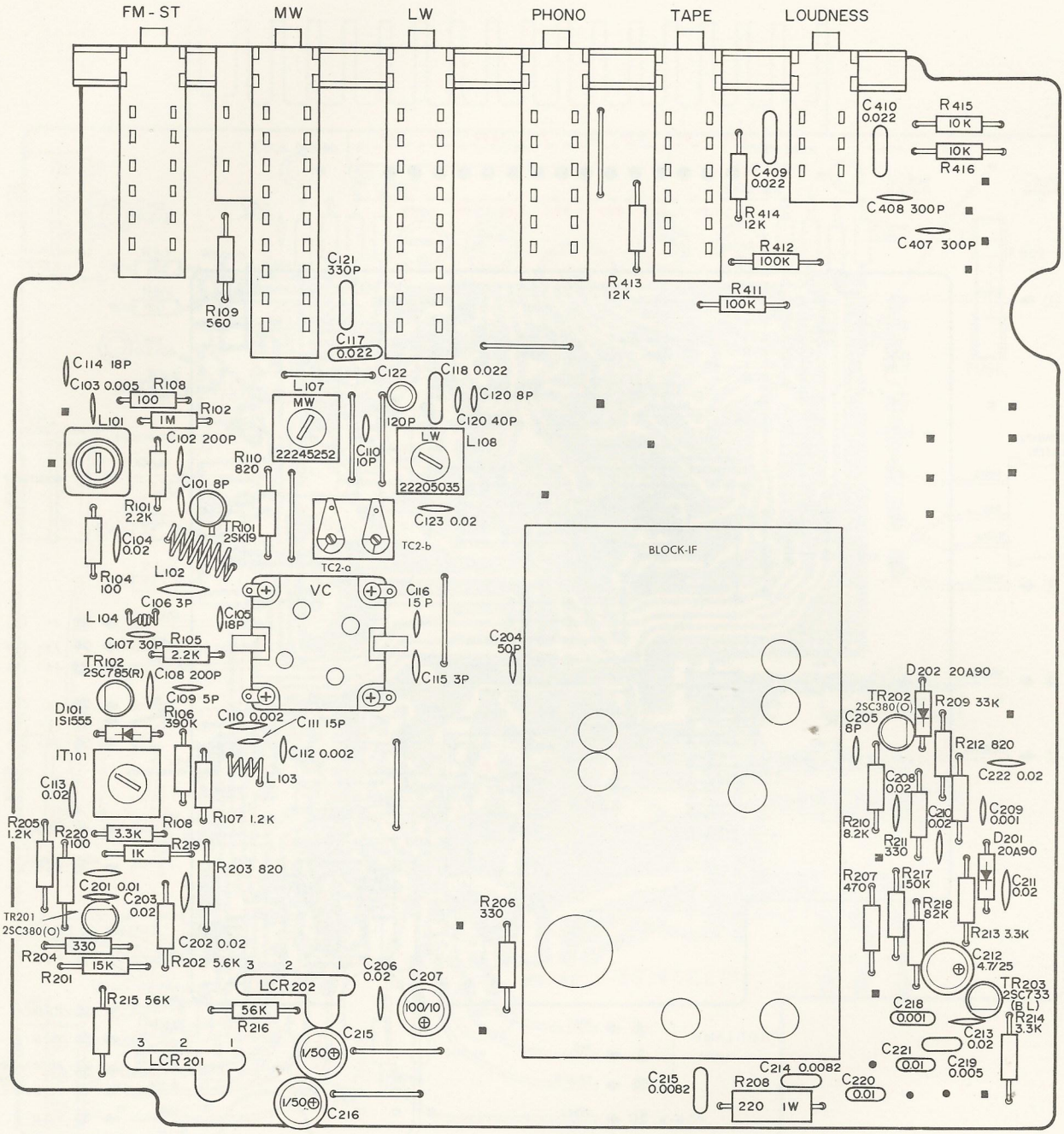

TOP VIEW (PCB-2)

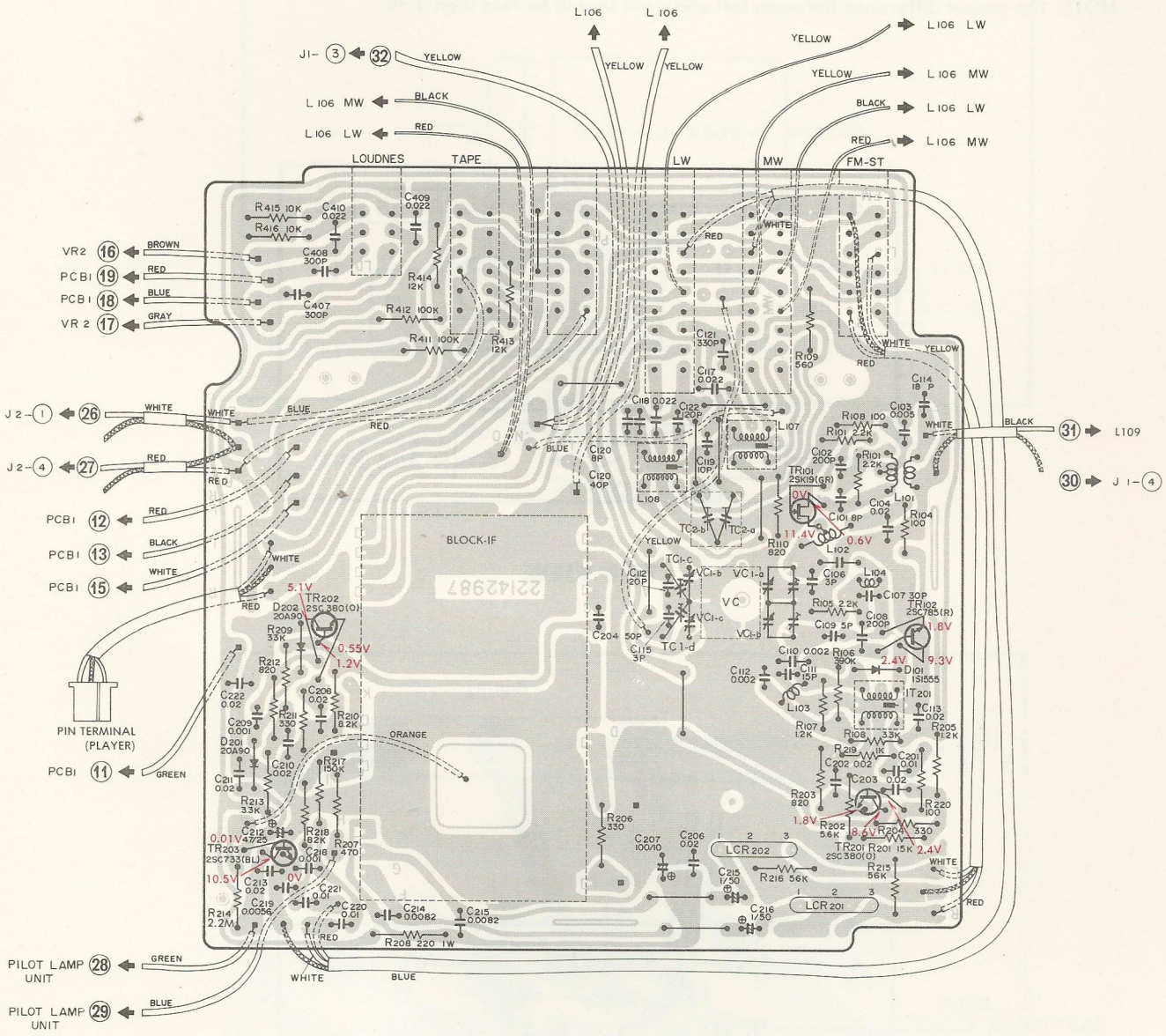
L106
L 106
L106 LW
L106 MW
L106 LW
L106 MW
J1- 3 32
YELLOW
BLACK
RED
LOUDNES
TAPE
LW
MW
FM-ST
VR2 16
PCB1 19
PCB1 18
VR 2 17
BROWN
GRAY
J 2-1 26
J 2-4 27
WHITE
BLUE
PCB1 12
PCB1 13
PCB1 15
BLACK
PIN TERMINAL (PLAYER)
PCB1 11
GREEN
ORANGE
BLOCK-IF
VC
LCR 202
LCR 201
31 L109
30 J 1-4
PILOT LAMP UNIT 28
PILOT LAMP UNIT 29

BOTTOM VIEW

5-3 IF BLOCK

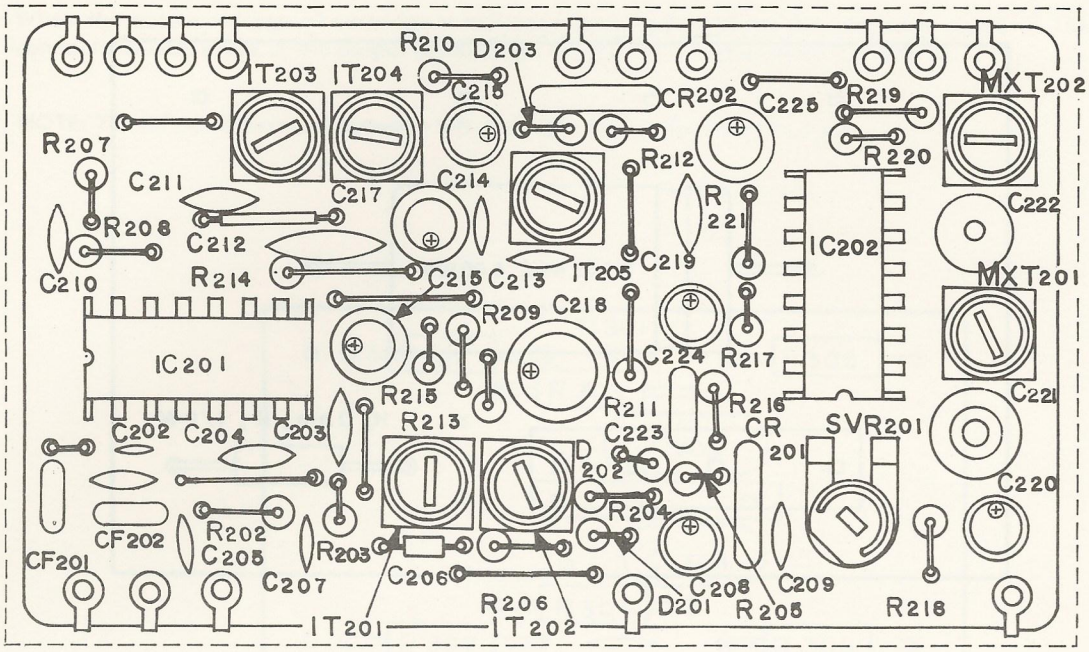

TOP VIEW

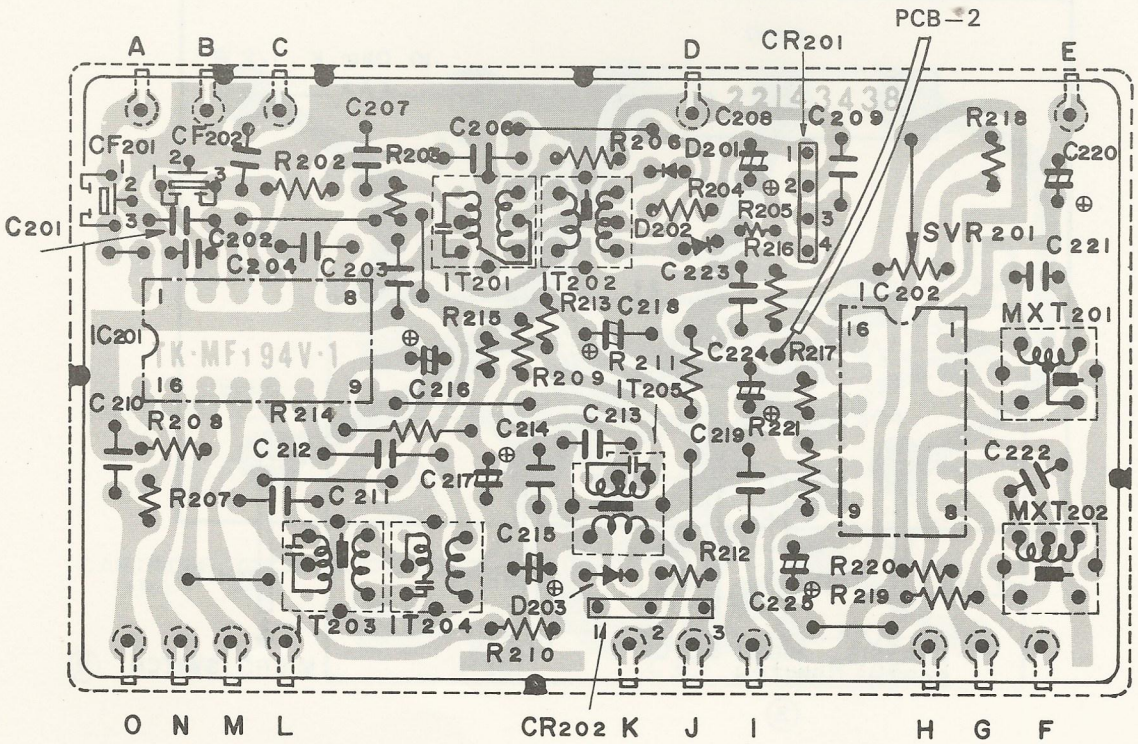

BOTTOM VIEW

5-4 SUPPLY BLOCK (PLAYER)

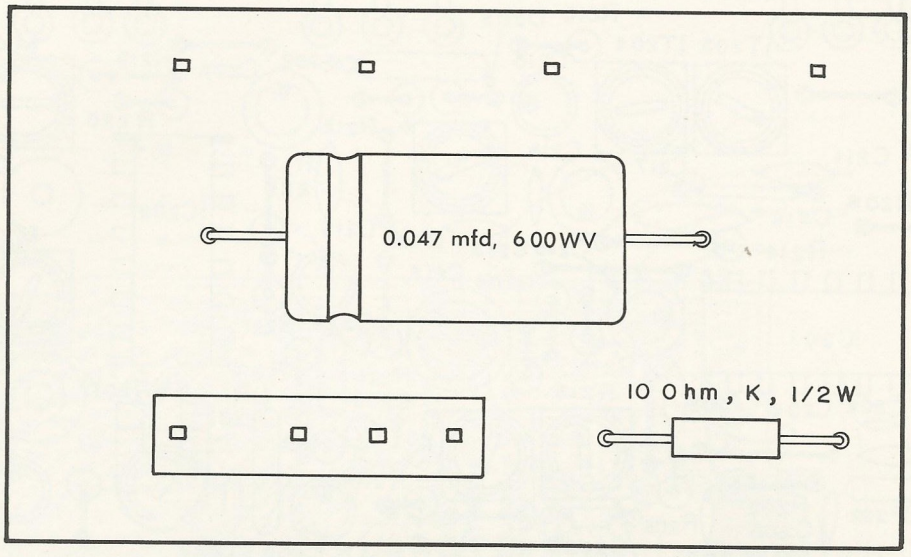

TOP VIEW

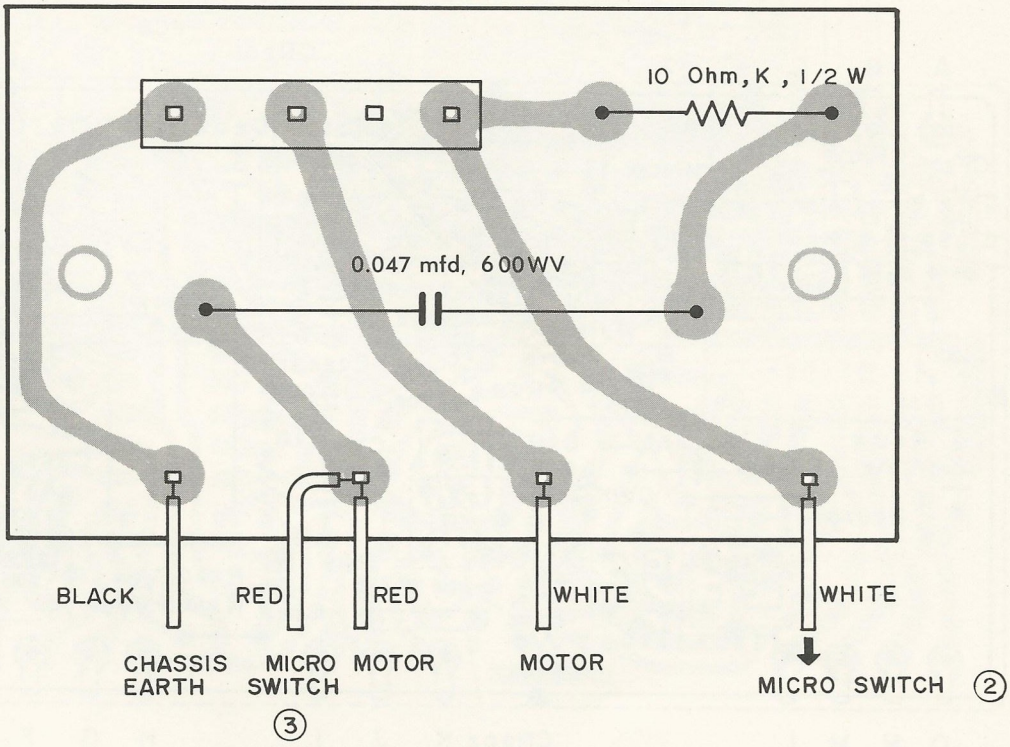

BOTTOM VIEW

5-5 ATTENUATOR BLOCK (PLAYER)

When the output voltage of cartridge is indicated more than 0.4V by the playback signal of 1KHz 5 cm/sec, connect the lead wires of the output of cartridge to "1IN" in the attenuator P.C. Board.

When the output voltage of cartridge is indicated less than 0.4V by the playback signal of 1KHz 5 cm/sec, connect the lead wires of the output of cartridge to "2IN" in the attenuator P.C. Board.

NOTE: The output difference between left and right should be less than 3 dB.

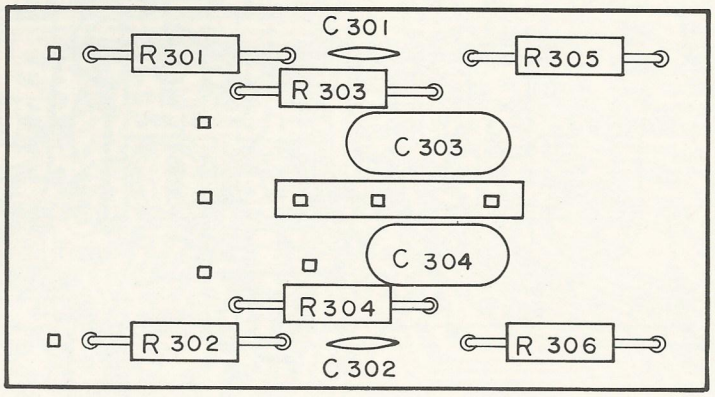

TOP VIEW

Tuning

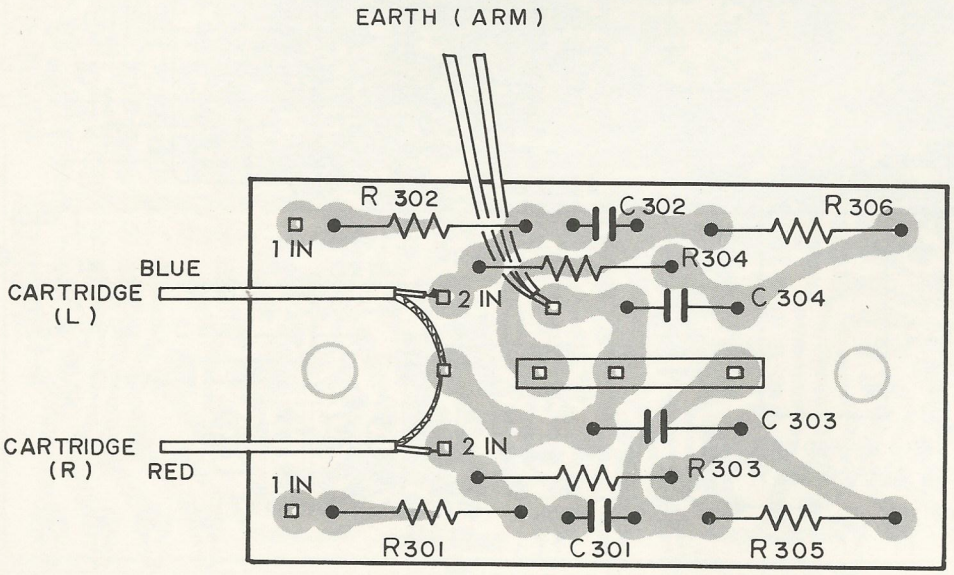

BOTTOM VIEW

6. SEVERAL PARTS CONNECTIONS

J1 FM, AM-AERIAL

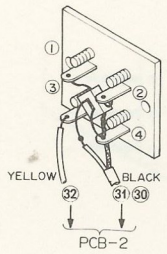

J2 REC/PB JACK

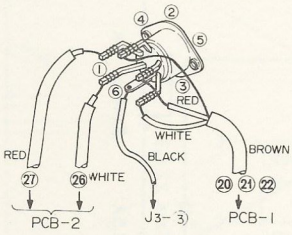

J3 SPEAKER JACK

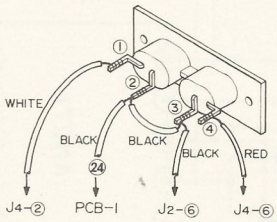

J4 HEADPHONE JACK

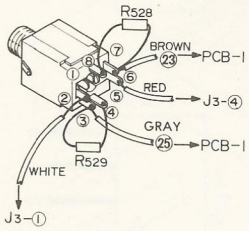

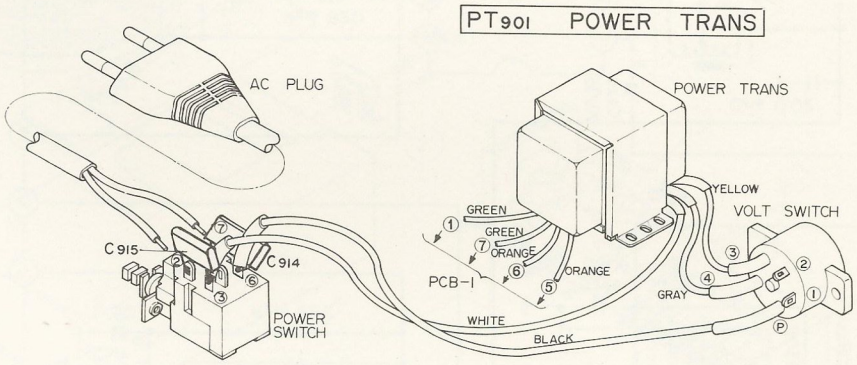

PT901 POWER TRANS

S2 POWER SWITCH

S3 VOLT SELECTOR

L106 BAR ANTENNA

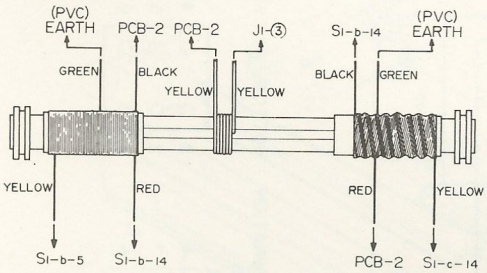

PILOT LAMP UNIT

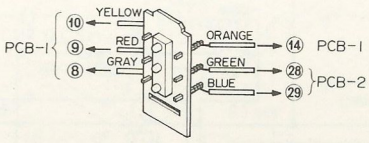

POINTER (With PL)

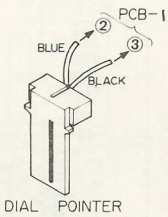

MICRO SWITCH (PLAYER)

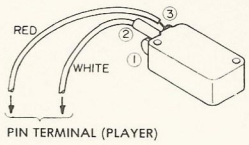

MOTOR

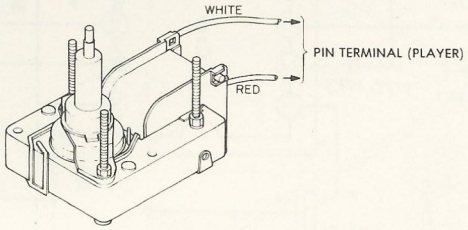

7. SCHEMATIC DIAGRAM

7-1 IF BLOCK

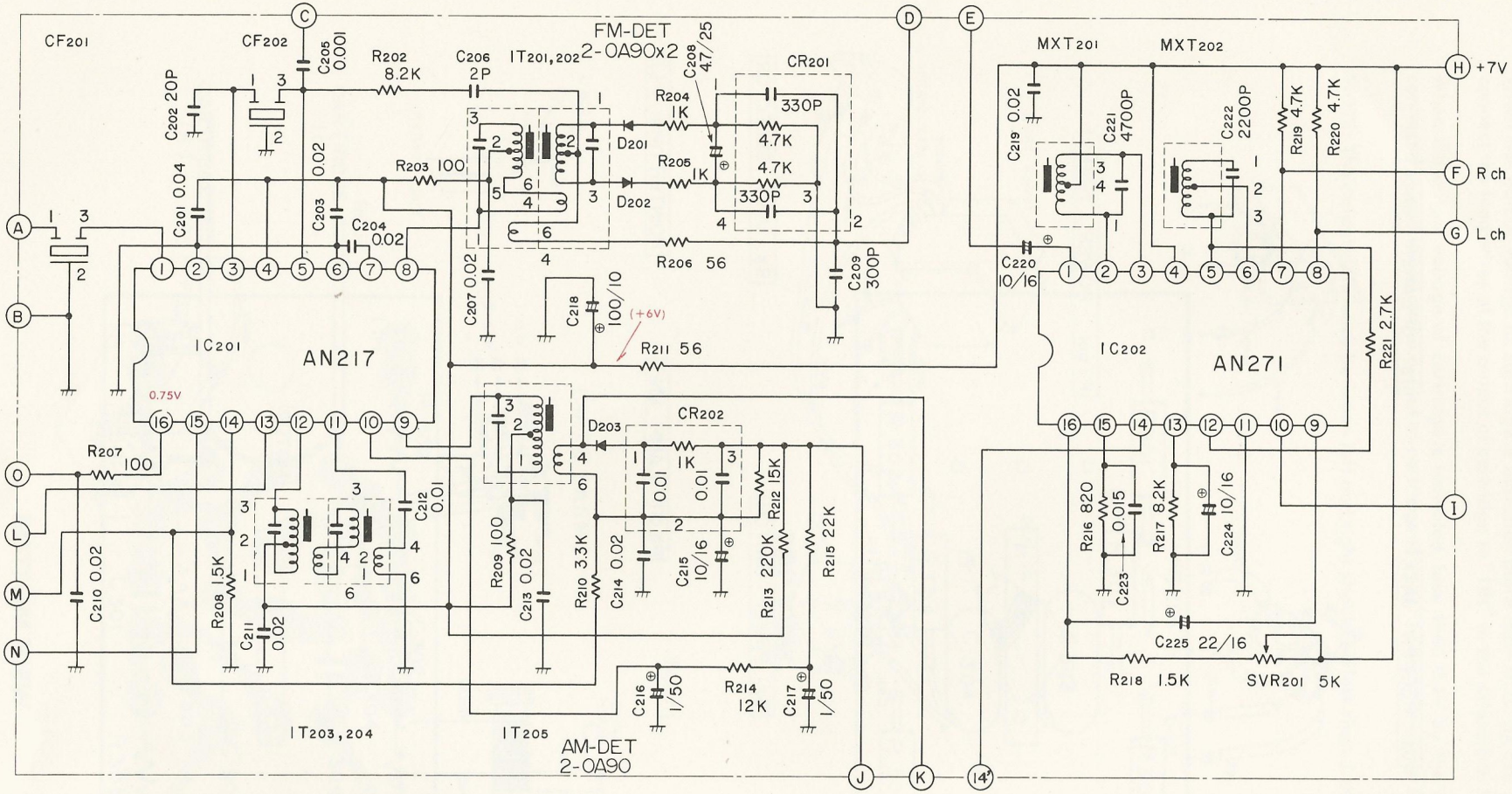

TRANSFORMER TERMINATION

IT202~205
MXT201,202

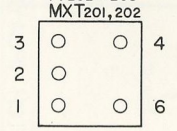

BOTTOM VIEW

IT201

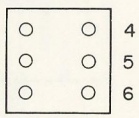

CR201

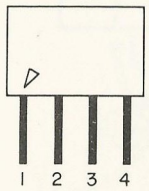

CR202

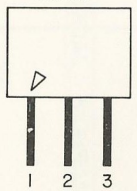

CF201,202

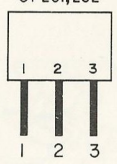

7-2 GENERAL

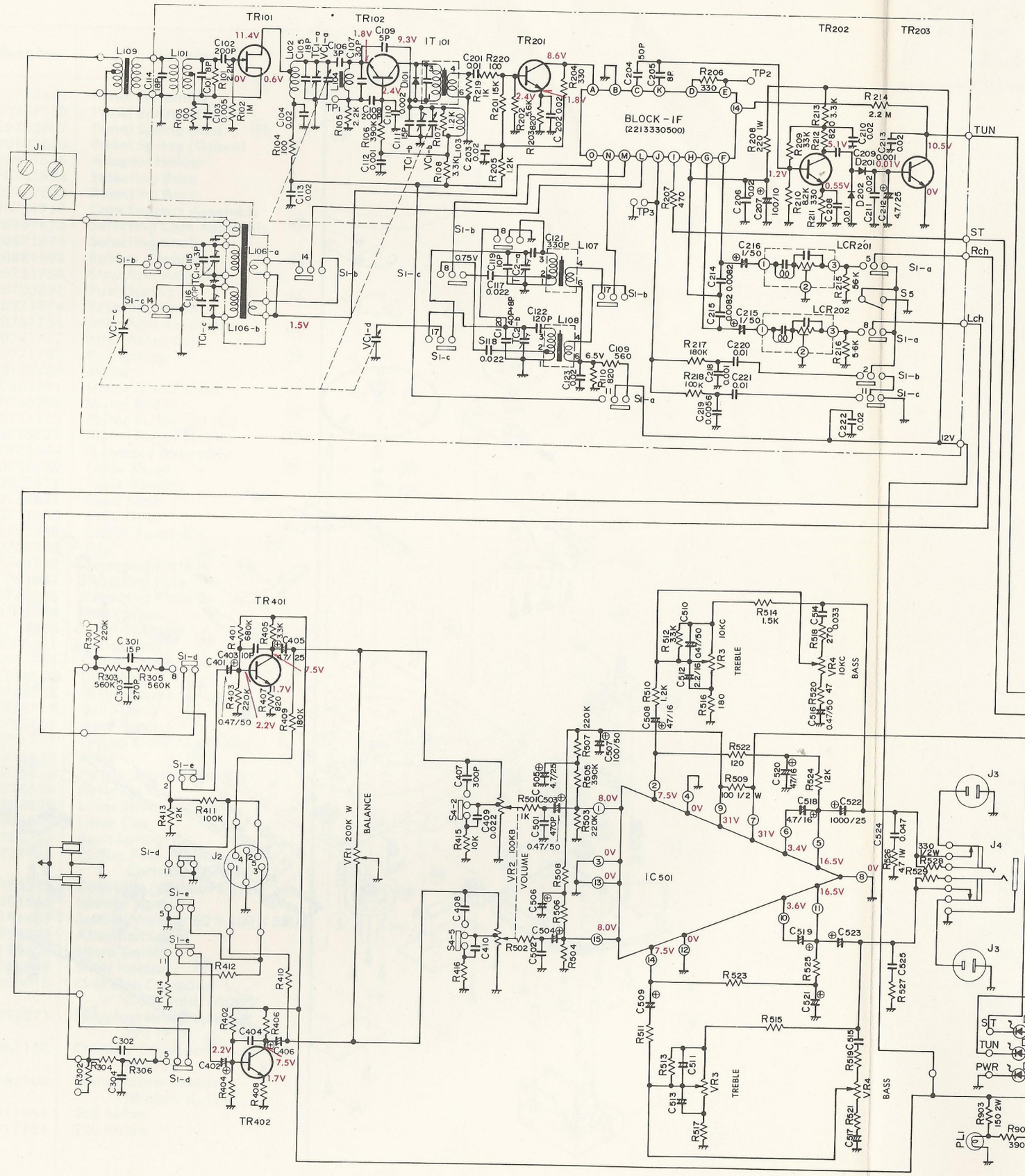

NOTE

1) ALL RESISTANCE VALUES ARE IN OHMS.
ALL CAPACITANCE VALUES ARE IN MICROFARADS.
K=1,000 M=1,000,000 P=1/1,000,000

2) SELECTOR "S1" IS SHOWN IN "MW" POSITION.

3) COMPONENTS AND VALUES ARE SUBJECTS TO CHANGE WITHOUT NOTICE FOR IMPROVEMENT.

TR101	2SK19	FM RF
TR102	2SC785	FM CONV
TR201	2SC380	FM IF
TR202	2SC380	JUST TUNING
TR203	2SC733	AMP
TR401,402	2SC732	TONE AMP
TR901	2SC1173	RIPPLE FILTER
D101	1S1555	FM LIMITER
D201,202	20A90	RECT
D901~904	1S1885	RECT
D905	WZ-182	BIAS
D906~908	S8169	IND
IC501	STK-435	MAIN AMP
BLOCK-IF	AM FM IF AMP, FM MPX	

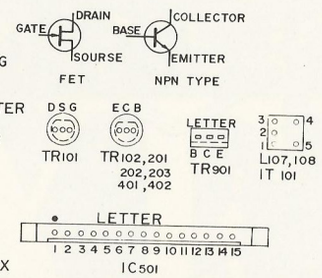

S1	SELECTOR	FM	MW	LW	PHONO	TAPE
S2	POWER SW	ON	OFF			
S3	POWER VOLTAGE SELECTOR	220V	240V			
S4	LOUDNESS SW	ON	OFF			
S5	MUTING SW					

(MW)
(OFF)
(240V)
(OFF)
(OFF)

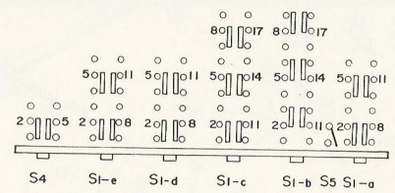

8. EXPLODED VIEW

8-1 GENERAL

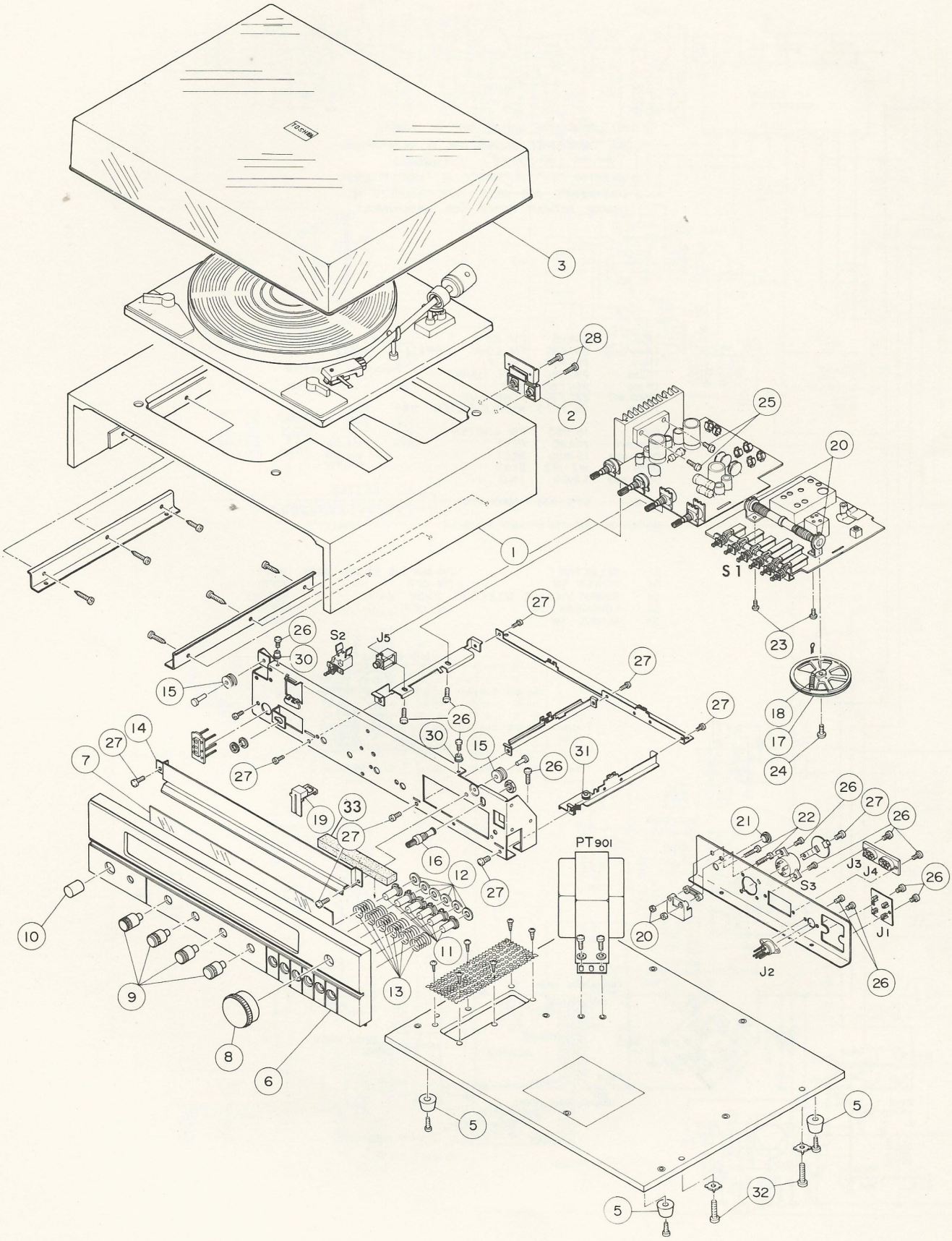

8-2 PLAYER

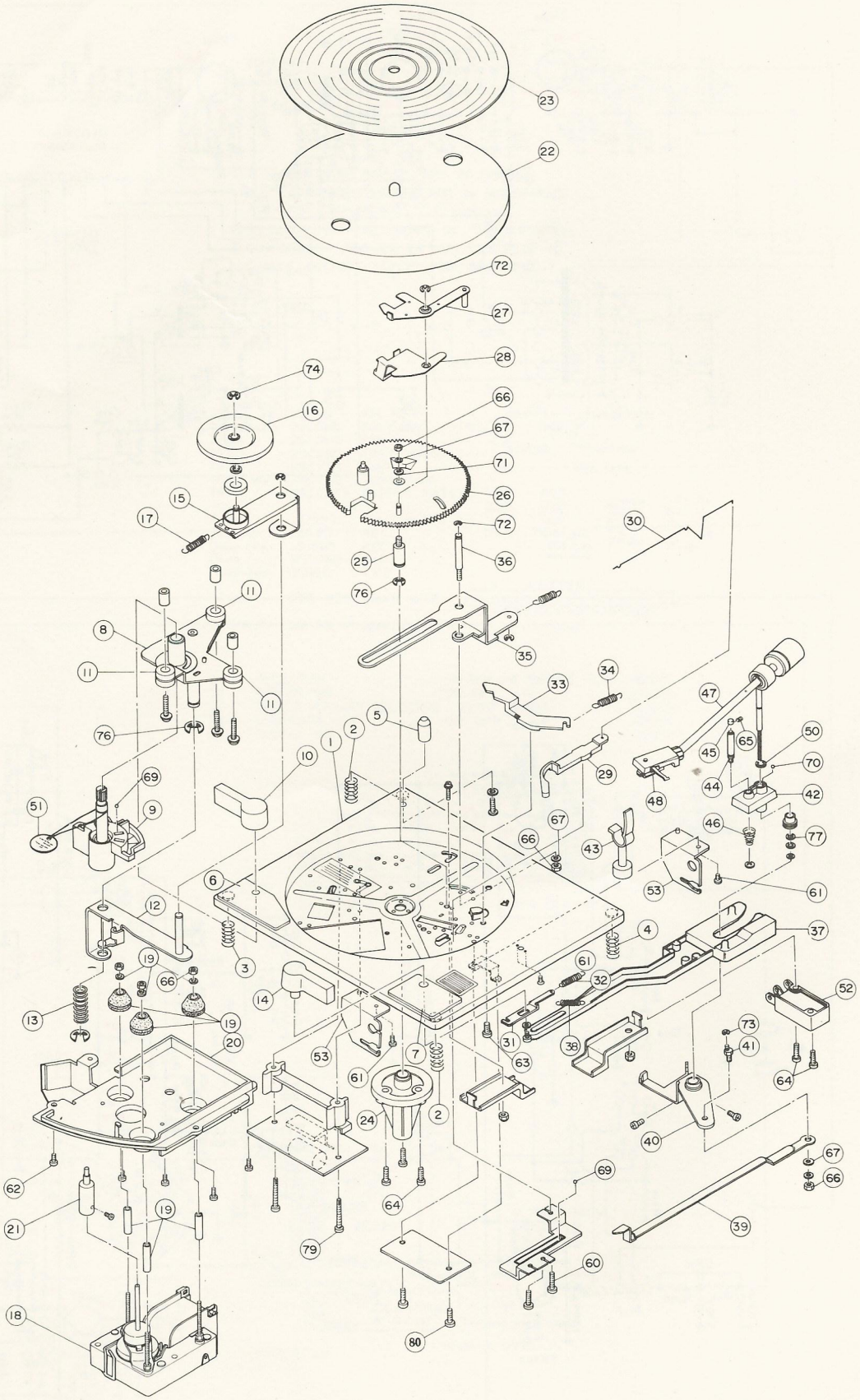
23
22
72
27
28
74
16
66
67
71
26
15
17
72
30
25
36
76
11
8
35
11
11
33
34
47
76
5
2
1
10
29
65
50
45
70
69
44
42
51
9
48
67
46
77
66
43
6
53
61
12
4
37
3
19
61
66
32
52
14
13
19
73
20
31
38
41
53
7
63
61
64
24
2
40
62
67
69
66
21
19
64
39
79
60
18
80

9. EXPLODED VIEW PARTS LIST

9-1 PLAYER

Key No.	Part No.	Description
1	20711671	Panel Assembly
2	20707738	Panel Spring (Blue)
3	20703807	Panel Spring (Red)
4	20703808	Panel Spring (Green)
5	20971646	Adaptor Holder
6	20743854	Selecting Base
7	20743853	Rejecting Base
8	20751759	Cam Support Assembly
9	20757678	Selecting Cam Assembly
10	20871875	Selecting Knob
11	20881602	Rubber Cushion
12	20751758	Step Arm Assembly
13	20703831	Push Spring
14	20871874	Rejecting Knob
15	20751756	Idler Arm Assembly
16	20741772	Idler Assembly
17	22771780	Pull Spring
18	22125429	Motor
19	20881791	Motor Attachment
20	20743786	Motor Sheet
21	20716717	Motor Pulley (50 Hz)
	20716737	Motor Pulley (60Hz)
22	20721644	Turntable Assembly
23	20723678	Table Sheet
24	20725671	Table Bearing
25	20764621	Gear Shaft
26	20727633	Main Gear
27	20751760	Clutch Assembly
28	20753740	Trip
29	20743782	Rejecting Plate A
30	20764687	Rejecting Pole
31	20743785	Rejecting Plate B
32	20705634	Pull Spring
33	20753868	Gear Stopper
34	20705601	Pull Spring
35	20751755	Crank Lever Assembly
36	20764624	Crank Shaft
37	20743783	Return Lever
38	20705713	Pull Spring
39	20753869	Auto Lever
40	20751757	Pickup Plate Assembly
41	20746810	Joint
42	20735645	Pickup Stand Assembly
43	20738624	Rest
44	20764626	Lifter Shaft
45	20746809	Lifter Cap
46	20707737	Push Spring
47	20731766	Pickup Arm (Without Cartridge, Stylus)
48	22155313	Cartridge (Without stylus)
49	22701565	Special Screw
50	20791689	Special Washer 62×100×3SUS
51	22956828	Attention Label
52	22146426	Micro Switch
53	20746728	Shaft Holder
	22303010	Oil-Filled Capacitor 0.047 mfd/600WV
	22392271	Polyplopylene Capacitor 270 PF, K
	22361150	Ceramic Capacitor 15 PF, J
	22563100	Composition Resistor 10 ohm, K, ½W
	22511564	560 kohm
	22511224	220 kohm

9-2 GENERAL

Key No.	Part No.	Description
GENERAL		
F901	22144191	Fuse, 2A
F902	22144191	Fuse, 2A
F903	22144228	Fuse, 0.5A
PT901	22223349	Power Transformer
	22165047	Fuse Holder
	22176286	Power Cord (Europe)
	22176438	Power Cord (Australia)
	22177072	Power Cord (without plug) (England)
S1	22140370	Push Switch (Band Selector)
S2	22140323	Push Switch (Power)
S3	22140322	Volt Switch
J1	22162051	4P Terminal
J2	22167608	DIN 5P Socket
J3, J4	22167467	DIN Socket 2P Assembly
J5	22163276	Jack, 6.5 ϕ
	22164519	3P Plug Cord
	22164578	4P Plug Cord
	22124966	FM Aerial
	22164305	Antenna Plug, FM
	22164487	Antenna Plug, AM
CABINET PARTS		
1	22821897	Main Cabinet Assembly (Europe)
1	22821901	Main Cabinet Assembly (Australia, England)
2	22872507	Hinge
3	20847787	Dust Cover Assembly
4	20826695	Bottom Board
5	20842611	Rubber Foot
6	22823546	Front Panel Assembly
7	22837769	Dial Cover
8	22835545	Tuning Knob
9	22835544	Volume Knob
10	22835546	Push Button (Power)
11	22835547	Push Button
12	20881601	Special Washer
13	22771786	Push Spring
14	22847816	Dial Plate
15	22742568	Pulley
16	20042696	Tuning Shaft
17	20042655	Drum
18	20705680	Pull Spring
19	22741621	Pointer Assembly
20	22756639	Bushing (Aerial)
21	22756783	Bushing (Power Cord)
33	22756826	Cushion

Key No.	Part No.	Description
	22821887	Speaker Cabinet (Europe)
	22821899	Speaker Cabinet (Australia, England)
	22151445	Speaker, (Woofer)
	22151777	Speaker, (Tweeter)
	22403028	Electrolytic 3.3 mfd/25WV
	22166418	Speaker Cord Assembly
	20875099	Mark
	22866759	Label (England)
	20791700	Special Washer (Mark)

10. ELECTRICAL PARTS LIST

TOLERANCE: D:±0.5PF, J:±5%, K:±10%, M:±20%, P:+100 — —0%, Z:+80 — —20%, G:±2%
RESISTORS All fixed resistors are ¼W, ±5%, carbon resistor unless otherwise noted.

Key No.	Part No.	Description
RF-BLOCK		
TR101		Transistor, 2SK19-GR
TR102		Transistor, 2SC785-R
D101		Diode, 1S1555V
L101	22292013	Aerial Coil, FM
L102	22294297	RF Coil, FM
L103	22294094	RF Coil, FM
L104	22291084	Choke Coil, FM
L109	22290004	Balun Coil
IT201	22265568	IF Transformer, FM
Capacitors		
	22308288	Variable Capacitor
C101	22361809	Ceramic 8PF, D
C102	22362201	Ceramic 200 PF, K
C103	22343502	Ceramic 0.005 mfd, M
C104	22341203	Ceramic 0.02 mfd, P
C105	22361180	Ceramic 18 PF, J
C106	22361309	Ceramic 3 PF, D
C107	22361300	Ceramic 30 PF, J
C108	22362201	Ceramic 200 PF, K
C109	22361509	Ceramic 5 PF, D
C110	22343202	Ceramic 0.002 mfd, M
C111	22361150	Ceramic 15 PF, J
C112	22343102	Ceramic 0.001 mfd, M
C113	22341203	Ceramic 0.02 mfd, P
C114	22361180	Ceramic 18 PF, J
Resistors		
R101	22561222	2.2 kohm, K, ¼W, Solid
R102	22561105	1 mohm, K, ¼W, Solid
R103	22561101	100 ohm, K, ¼W, Solid
R104	22561101	100 ohm, K, ¼W, Solid
R105	22561222	2.2 kohm, K, ¼W, Solid
R106	22561394	390 kohm, K, ¼W, Solid
R107	22561122	1.2 kohm, K, ¼W, Solid
R108	22561332	3.3 kohm, K, ¼W, Solid
IF-BLOCK		
	22133305	IF Block
TR201		Transistor, 2SC380-O
TR202		Transistor, 2SC380-O
TR203		Transistor, 2SC733-BL
D201	22115201	Diode, 20A90
D202	22115201	Diode, 20A90
L106	22242606	Aerial Coil Assembly
L107	22245252	OSC Coil, MW
L108	22205035	OSC Coil, LW
LCR201	22134109	LCR Combination
LCR202	22134109	LCR Combination
Capacitors		
TC2	22309036	Trimmer Capacitor
C115	22361309	Ceramic 3 PF, D

Key No.	Part No.	Description
C116	22361200	Ceramic 20 PF, J
C117	22372223	Mylar 0.022 mfd, K
C118	22372223	Mylar 0.022 mfd, K
C119	22361100	Ceramic 10 PF, D
C120	22362400	Ceramic 40 PF+8PF, K (Parallel Connection)
C121	22391331	Polyplopylene 330 PF, J
C122	22381121	Polystyrene 120 PF, J
C123	22341203	Ceramic 0.02 mfd, P
C201	22341103	Ceramic 0.01 mfd, P
C202	22341203	Ceramic 0.02 mfd, P
C203	22341203	Ceramic 0.02 mfd, P
C204	22362500	Ceramic 50 PF, K
C205	22361809	Ceramic 8 PF, D
C206	22341203	Ceramic 0.02 mfd, P
C207	22443101	Electrolytic 100 fmd/10WV
C208	22372103	Ceramic 0.01 mfd, P
C209	22343102	Ceramic 0.001 mfd, M
C210	22341203	Ceramic 0.02 mfd, P
C211	22341203	Ceramic 0.02 mfd, P
C212	22446479	Electrolytic 4.7 mfd/25WV
C213	22341203	Ceramic 0.02 mfd, P
C214	22372822	Mylar 0.0082 mfd, K
C215	22372822	Mylar 0.0082 mfd, K
C216	22448109	Electrolytic 1mfd/50WV
C217	22448109	Electrolytic 1 mfd/50WV
C218	22372102	Mylar 0.001 mfd, K
C219	22372562	Mylar 0.0056 mfd, K
C220	22372103	Mylar 0.01 mfd, K
C221	22372103	Mylar 0.01 mfd, K
C222	22341203	Ceramic 0.02 mfd, P
Resistors		
R109	22545561	560 ohm
R110	22545821	820 ohm
R201	22545153	15 kohm
R202	22545562	5.6 kohm
R203	22545821	820 ohm
R204	22545331	330 ohm
R205	22545122	1.2 kohm
R206	22545331	330 ohm
R207	22545471	470 ohm
R208	22570161	220 ohm, J, 1W, Metal Oxide
R209	22545333	33 kohm
R210	22545822	8.2 kohm
R211	22545331	330 ohm
R212	22545821	820 ohm
R213	22545332	3.3 kohm
R214	22545225	2.2 Mohm
R215	22545563	56 kohm
R216	22545563	56 kohm
R217	22545184	180 kohm
R218	22545104	100 kohm
R219	22545102	1 kohm
R220	22545101	100 ohm

Key No.	Part No.	Description
ATTENUATOR BLOCK		
Capacitors		
C407	22362301	Ceramic 300 PF, K
C408	22362301	Ceramic 300 PF, K
C409	22372223	Mylar 0.022 mfd, K
C410	22372223	Mylar 0.022 mfd, K
Resistors		
R411	22545104	100 kohm
R412	22545104	100 kohm
R413	22545123	12 kohm
R414	22545123	12 kohm
R415	22545103	10 kohm
R416	22545103	10 kohm
AF-BLOCK (PRI)		
TR401		Transistor, 2SC732-GR
TR402		Transistor, 2SC732-GR
Capacitors		
C401	22440116	Electrolytic 0.47 mfd/50WV
C402	22440116	Electrolytic 0.47 mfd/50WV
C403	22361100	Ceramic 10 PF, D
C404	22361100	Ceramic 10 PF, D
C405	22448479	Electrolytic 4.7 mfd/25WV
C406	22448479	Electrolytic 4.7 mfd/25WV
Resistors		
R401	22545684	680 kohm
R402	22545684	680 kohm
R403	22545224	220 kohm
R404	22545224	220 kohm
R405	22545332	3.3 kohm
R406	22545332	3.3 kohm
R407	22545821	820 ohm
R408	22545821	820 ohm
R409	22545823	82 kohm
R410	22545823	82 kohm
TONE-BLOCK		
Capacitors		
C510	22440138	Electrolytic 0.47 mfd/50WV
C511	22440138	Electrolytic 0.47 mfd/50WV
C512	22440139	Electrolytic 2.5 mfd/25WV
C513	22440139	Electrolytic 2.5 mfd/25WV
C514	22372333	Mylar 0.033 mfd, K
C515	22372333	Mylar 0.033 mfd, K
C516	22440138	Electrolytic 0.47 mfd/50WV
C517	22440138	Electrolytic 0.47 mfd/50WV

Key No.	Part No.	Description
Resistors		
R512	22545333	33 kohm
R513	22545333	33 kohm
R514	22545152	1.5 kohm
R515	22545152	1.5 kohm
R516	22545181	180 ohm
R517	22545181	180 ohm
R518	22545271	270 ohm
R519	22545271	270 ohm
R520	22545470	47 ohm
R521	22545470	47 ohm
AF-BLOCK (MAIN)		
IC501	22114449	IC-STK-435
Capacitors		
C501	22361471	Ceramic 470 PF, K
C502	22361471	Ceramic 470 PF, K
C503	22440116	Electrolytic 0.47 mfd/50WV
C504	22440116	Electrolytic 0.47 mfd/50WV
C505	22446479	Electrolytic 4.7 mfd/25WV
C506	22446479	Electrolytic 4.7 mfd/25WV
C507	22448101	Electrolytic 100 mfd/50WV
C508	22445470	Electrolytic 47 mfd/16WV
C509	22445470	Electrolytic 47 mfd/16WV
C518	22445470	Electrolytic 47 mfd/16WV
C519	22445470	Electrolytic 47 mfd/16WV
C520	22445470	Electrolytic 47 mfd/16WV
C521	22445470	Electrolytic 47 mfd/16WV
C522	22446102	Electroltyic 1000 mfd/25WV
C523	22446102	Electrolytic 1000 mfd/25WV
C524	22372473	Mylar 0.047 mfd, K
C525	22372473	Mylar 0.047 mfd, K
Resistors		
R501	22545102	1 kohm
R502	22545102	1 kohm
R503	22545224	220 kohm
R504	22545224	220 kohm
R505	22545394	390 kohm
R506	22545394	390 kohm
R507	22545224	220 kohm
R508	22545224	220 kohm
R509	22563101	100 ohm, K, ½W, Solid
R510	22545122	1.2 kohm
R511	22545122	1.2 kohm
R522	22545121	120 ohm
R523	22545121	120 ohm
R524	22545123	12 kohm
R525	22545123	12 kohm
R526	22570157	4.7 ohm, J, 1W, Metal Oxide
R527	22570157	4.7 ohm, J, 1W, Metal Oxide
R528	22563331	330 ohm, K, ½W, Solid
R529	22563331	330 ohm, K, ½W, Solid

Key No.	Part No.	Description
SUPPLY-BLOCK		
TR901		Transistor, 2SC1173-Y
D901		Diode, 1S1885
D902		Diode, 1S1885
D903		Diode, 1S1885
D904		Diode, 1S1885
D905	22115332	Diode, WZ-182
D906		Diode, S8169
D907		Diode, S8169
D908		Diode, S8169
Capacitors		
C901	22440133	Electrolytic 1mfd/50WV
C902	22344103	Ceramic 0.01 mfd, P
C903	22344103	Ceramic 0.01 mfd, P
C904	22344103	Ceramic 0.01 mfd, P
C905	22344103	Ceramic 0.01 mfd, P
C906	22440106	Electrolytic 2200 mfd/50WV
C907	22447221	Electrolytic 220 mfd/35WV
C908	22341103	Ceramic 0.01 mfd, P
C909	22446221	Electrolytic 220 mfd/25WV
C910	22445221	Electrolytic 220 mfd/16WV
C912	22362101	Ceramic 100 PF, K
C913	22344472	Ceramic 0.0047 mfd, P
C914	22330125	Metallized Paper 0.0047 mfd /250V
C915	22330125	Metallized Paper 0.0047 mfd /250V
Resistors		
R901	22545102	1 kohm
R902	22570158	47 ohm, J, 2W, Metal Oxide
R903	22570159	150 ohm, J, 2W, Metal Oxide
R904	22545223	2.2 kohm
R905	22545102	1 kohm
R906	22545152	1.5 kohm
R907	22570160	68 ohm, J, 3W, Metal Oxide
VR1	22620203	Variable Resistor 200 kohm (Balance)
VR2	22628203	Variable Resistor 100 kohm (Volume)
VR3	22620206	Variable Resistor 10 kohm (Bass)
VR4	22620206	Variable Resistor 10 kohm (Treble)
ACCESSORIES PARTS		
	22952985	Owner's Manual
	22956836	Caution Label (England)
	20971652	45rpm Adaptor

TOSHIBA

MANUFACTURED BY
TOKYO SHIBAURA ELECTRIC CO., LTD.
2-1, GINZA 5CHOME, CHUO-KU TOKYO 104, JAPAN
CABLE: TOSIBAGNZ TOKYO, TELEX NO.: J24681, J24682, J24683

PART NO. 22955692 (S) MARCH '76 PRINTED IN JAPAN