TOSHIBA

STEREO SOUND SYSTEM

SL-3257

SPECIFICATIONS

■ Tuner

Frequency range:	FM: 88 MHz – 108 MHz MW: 526.5 kHz – 1606.5 kHz LW: 150 kHz –280 kHz
Sensitivity:	FM: 5μV MW/LW: 500μV
Signal-to-noise ratio: (IHF A Network)	FM mono: 62 dB FM stereo: 52 dB MW/LW: 50 db
Stereo separation:	30 dB (1 kHz)

■ Amplifier

Rated output power:	10W (per channel, 10% THD, at 8 ohms, 1kHz)
Total harmonic distortion:	0.2% at half rated output power, 1 kHz
Input terminals:	Mic (Mono, 3.5 mm diameter), PHONO, AUX
Output terminals:	Headphones, speakers, turntable power source
Graphic equalizer:	Center frequencies: 63 Hz, 250 Hz 1 KHz, 4kHz, 12 kHz Adjustment range: ±10 dB
Signal-to-noise ratio:	Phono: 70 dB AUX: 82dB

■ Cassette Deck

Track system:	4-track, 2-channel stereo
Recording system:	AC bias (85 kHz)
Heads:	Deck A: Pb: 1 Deck B: Rec/pb: 1 Erase: 1
Wow and flutter:	0.15% (WRMS)
Frequency response:	40 – 14,000 Hz (normal tape)
Signal-to-noise ratio:	50 dB (normal tape)
Motor:	Electronically controlled DC type: 2

■ Compact Disc Player

Type:	Compact Disc player with optical pickup
Channels:	2 channel (Stereo)
Wow and flutter:	Unmeasurable
Picup:	Semiconductor laser type
Random access:	By track number

■ General

Power supply:	AC 220V ∿, 50 Hz (Europe) AC 240V ∿, 50 Hz (U.K., Australia, Germany)
Power consumption:	38 watts
Dimensions:	340(W) x 294.5(H) x 282.5(D) mm
Weight:	6.6 kg

Specifications are subject to change without notice.

TE, TU, AY, TD

PRINTED IN JAPAN 22905695 Aug., 1987 Ⓢ

CAUTION
USE OF CONTROLS OR ADJUSTMENTS OR PERFORMANCE OF PROCEDURES OTHER THAN THOSE SPECIFIED HEREIN MAY RESULT IN HAZARDOUS RADIATION EXPOSURE. DO NOT LOOK INTO THE OPTICAL LENS AT ANYTIME.

OBS! Apparaten innehåller laserkomponent som avger laserstrålning överstigande gränsen för laserklass 1.

"CLASS 1 LASER PRODUCT"

ADVARSEL

Denne mærkning er anbragt udvendigt på apparatet og indikerer, at appapatet arbejder med laserstråler af klasse 1, hvilket betyder, at der anvendes laserstråler at svageste klasse, og at man ikke på apparatets yderside kan blive udsat for utilladelig kraftig stråling.

APPARATET BOR KUN ÅBNES AF FAGFOLK MED SAERLIGT KENDSKAB TIL APPARATER MED LASERSTRÅLER!

ADVARSEL: USYNLIG LASERSTRÅLING VED ÅBNING, NÅR SIKKERHEDSAFBRYDER ER UDE AF FUNKTION. UNDGÅ UDSÆTTELSE FOR STRÅLING.

Indvendigt i apparatet er anbragt den her gengivne advarselsmærkning, som advarer imod at foretage sådanne indgreb i apparatet, at man kan komme til at udsætte sig for laserstråling.

Varoitus: Laite sisältää laserdiodin, joka lähettää näkymätöntä silmille vaarallista lasersäteilyä.

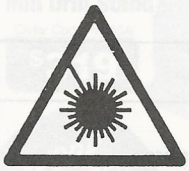

CAUTION: This equipment contains a laser diode which causes invisible laser radiation, which is dangerous to eyes.
Inside of the equipment, there is a warning marking of laser radiation.

"CLASS 1 LASER PRODUCT"

CAUTION: This model is classified as a "CLASS I LASER PRODUCT".

CLASS 1 LASER PRODUCT

RADIO INTERFERENCE REGULATIONS

THIS APPARATUS HAS BEEN PRODUCED TO COMPLY WITH "DIRECTIVE NO. 82/499/EEC".

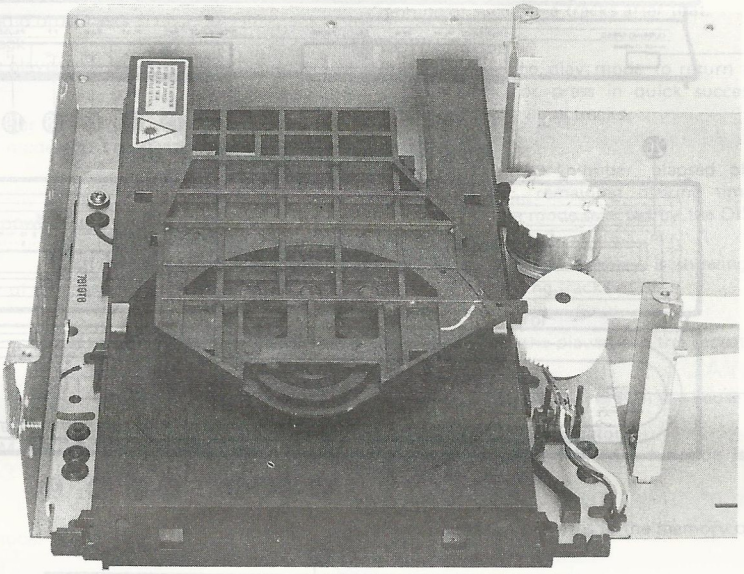

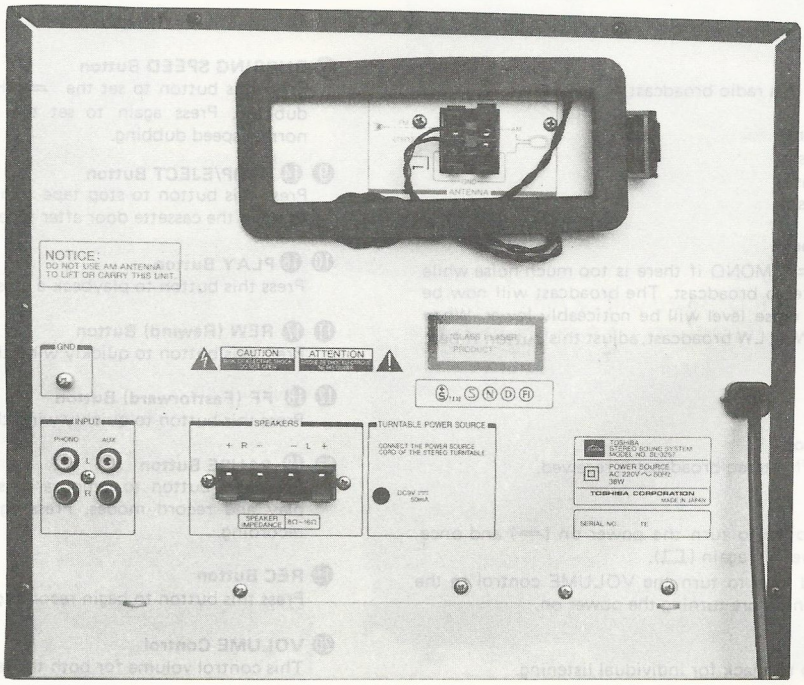

OPERATING CONTROLS

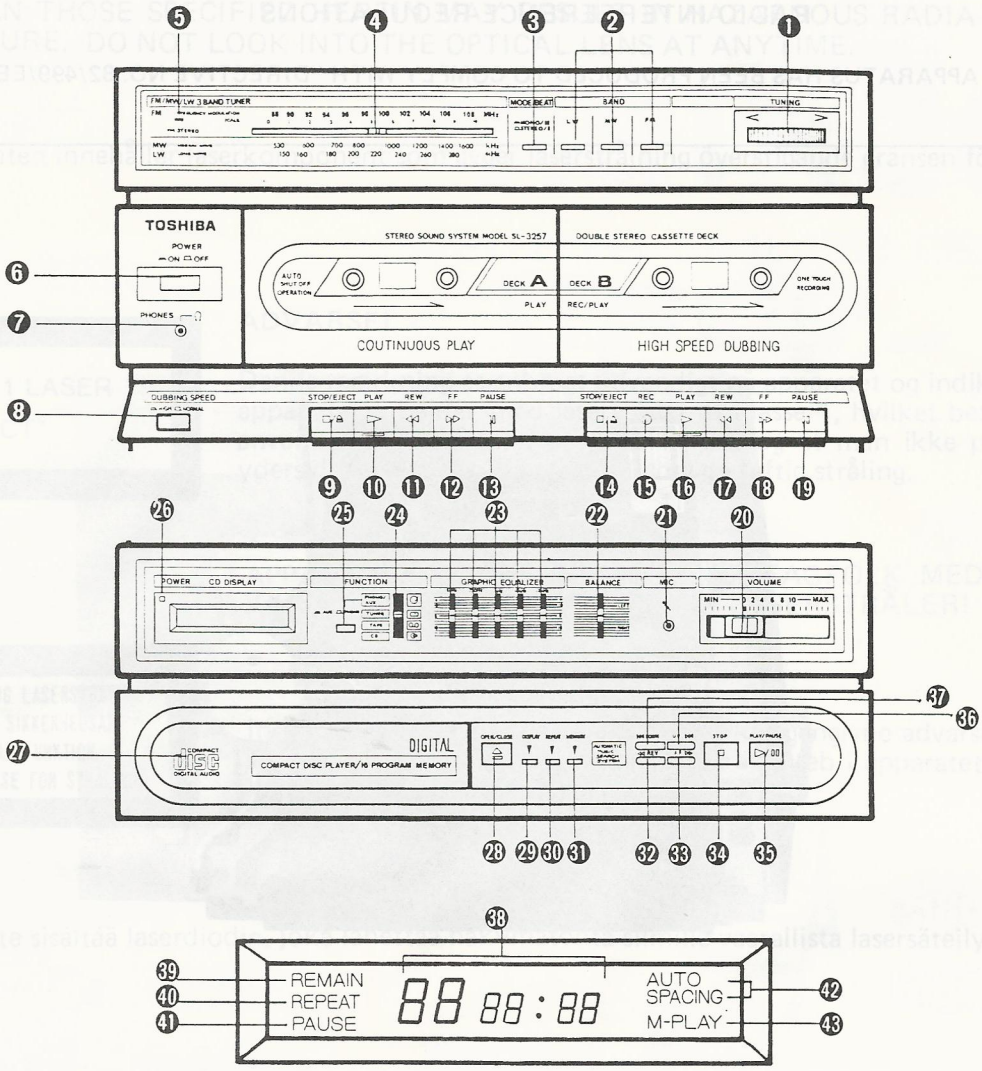

❶ **TUNING Knob**
Use this knob to tune in a radio broadcast.

❷ **BAND Selector Buttons**
FM: For FM broadcasts
MW: For MW broadcasts
LW: For LW broadcasts

❸ **MODE/BEAT Selector**
Set this button to ▭ MONO if there is too much noise while listening to an FM stereo broadcast. The broadcast will now be in "mono", but the noise level will be noticeably lower. When recording from an MW or LW broadcast, adjust this button if beat interference is heard.

❹ **Tuning Pointer**

❺ **FM STEREO Indicator**
This lights when an FM stereo broadcast is received.

❻ **POWER Button**
Depress this button once to turn the power on (▭) and once more to turn the power off again (▭).
NOTE: It is a good idea to turn the VOLUME control to the MIN position before turning the power on.

❼ **PHONES Jack**
Plug headphones into this jack for individual listening.

❽ **DUBBING SPEED Button**
Press this button to set the ▭ HIGH position for high speed dubbing. Press again to set the ▭ NORMAL position for normal speed dubbing.

❾ ⓮ **STOP/EJECT Button**
Press this button to stop tape transport. Press this button again to open the cassette door after tape transport has been stopped.

❿ ⓰ **PLAY Button**
Press this button to playback a cassette.

⓫ ⓱ **REW (Rewind) Button**
Press this button to quickly wind the tape backward.

⓬ ⓲ **FF (Fastforward) Button**
Press this button to quickly wind the tape forward.

⓭ ⓳ **PAUSE Button**
Press this button to temporarily stop tape transport during the play and record modes. Press again to continue playback or recording.

⓯ **REC Button**
Press this button to begin recording.

⓴ **VOLUME Control**
This control volume for both the left and right channels.

㉑ **MIC Jack**
This jack accommodates a microphone with a 6.3mm plug for recording with a microphone or using the unit as a public address system.

㉒ **BALANCE Control**
Use this control to adjust the relative volume levels of the left and right speaker systems.

㉓ **GRAPHIC EQUALIZER level controls**
These level controls adjust response in the five frequency bands centered at the frequency shown above each control. Adjust these controls to produce the desired sonic effect. If no alteration of sound quality is required, set all five controls to the center "0" position.

㉔ **FUNCTION Selector**
Use this switch to select the desired audio source:
PHONO/AUX: When using the turntable or audio equipment
TUNER: For FM, MW or LW radio broadcasts
TAPE: When using the cassette deck
CD: When using the compact disc player

㉕ **PHONO/AUX Selector Button**
After setting the FUNCTION selector on position PHONO/AUX, press this selector for AUX mode and keep unpressed for PHONO mode.

㉖ **POWER Indicator**
This indicator lights up when the power switch is depressed.

㉗ **Disc Tray**
Place a compact disc in the center of this tray.

㉘ **OPEN/CLOSE Button**
Press this button to open or close the disc tray.

㉙ **DISPLAY Button**
Press this button to make appeared the displays of TRACK NO, LAP TIME, REMAIN TIME, REMAIN TRACK NO, and MEMORY.

㉚ **REPEAT Button**
Press to activate the repeat play mode.

㉛ **MEMORY Button**
Press to store a track number in the memory.

㉜ **REV Button**
While this button is kept pressed, the fast reverse function is activated regardless of track numbers.

㉝ **FF Button**
While this button is kept pressed, the fast forward function is activated regardless of track numbers.

㉞ **STOP Button**
When this button is pressed during disc play, the mode turns to the stop mode. When this button is pressed in the stop mode after the MEMORY button has been pressed, memory is cancelled.

㉟ **PLAY/PAUSE Button**
Press once to commence disc play, and press again to temporarily stop the disc (pause mode).

㊱ **UP Button**
Press once during play mode to advance to the beginning of the next track, or press in quick succession to advance to the beginning of successive tracks after that.

㊲ **DOWN Button**
Press once during play mode to return to the beginning of the current track, or press in quick succession to return to the beginning of previous tracks.

㊳ **Display**
Displays the track number, elapsed playing time, remaining tracks of disc, remaining playing time or memory settings according to the mode selected by the DISPLAY button.

㊴ **REMAIN Indicator**
Lights up when the display is showing the remaining playing time and remaining tracks of disc.

㊵ **REPEAT Indicator**
Lights up when the player is in the repeat mode.

㊶ **PAUSE Indicator**
Lights up when the player is in the pause mode.

㊷ **AUTO SPACING Indicator**
Lights when AUTO SPACE function is working for recording from compact disc.

㊸ **M-PLAY Indicator**
Lights up when player is in the memory play mode.

DISASSEMBLY INSTRUCTIONS

TOP COVER REMOVAL

1. Remove two screws from side boards and six screws from rear board, and the top cover will be removed.

JACK BOARD REMOVAL

1. Remove nine screws Ⓐ, and the jack board will be removed.

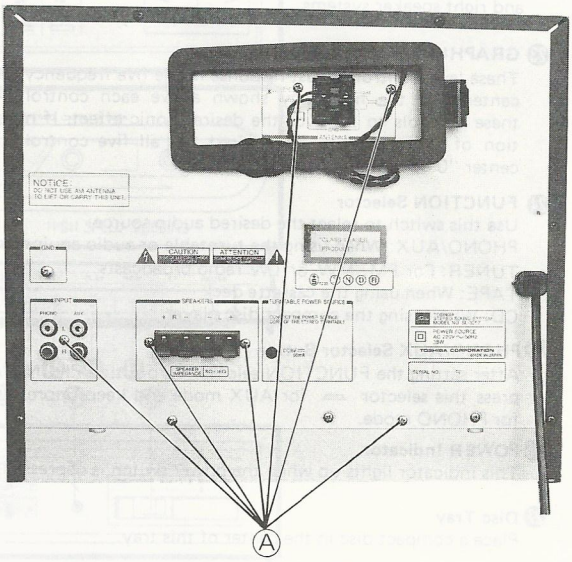

TRAY PANEL REMOVAL

1. Push tray lever to front side by your hand with clamper lever lifted up, and the tray lever will be moved to forward.
2. Release two hooks of tray panel with the clamper lever moved to forward, and the tray panel will be removed.

FRONT PANEL ASSEMBLY REMOVAL (with Tuner P.C. Board and Mechanism Assembly)

1. Remove tray panel.
2. Remove one ground terminal screw Ⓑ from Key Switch P.C. Board of CD player.
3. Remove one screw Ⓒ from graphic equalizer volume holder.
4. Remove two screws Ⓓ from side boards of front panel and one screw Ⓔ from bottom side.
5. Remove two screws Ⓕ from Power Switch P.C. Board, and the P.C. Board will be removed.
6. Remove two screws Ⓖ and Ⓗ from dubbing speed selector switch, and its P.C. Board will be removed.
7. Remove one connector Ⓘ from Tuner P.C. Board and four connectors Ⓙ from Mechanism P.C. Board.
8. Remove six screws Ⓚ from Control P.C. Board of CD player, and the Control P.C. Board will be removed. Release two hooks on bottom plated, and the Front Panel Assembly will be removed.

   Note: When remounting Front Panel Assembly, set function knob on Main P.C. Board to center position (tuner or tape) and volume knob to min. pointer. Remount front panel with volume knob on front panel to min. position.

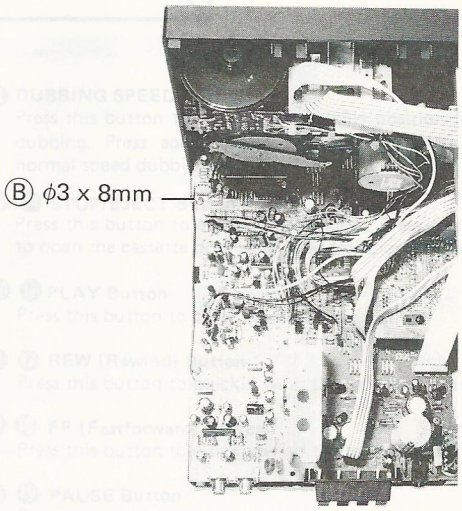

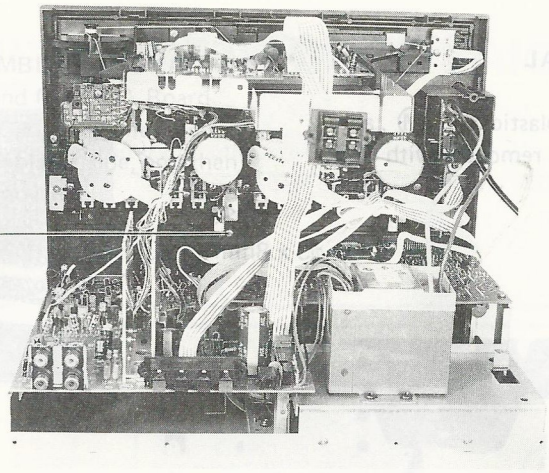
Ⓒ ϕ3 x 10mm

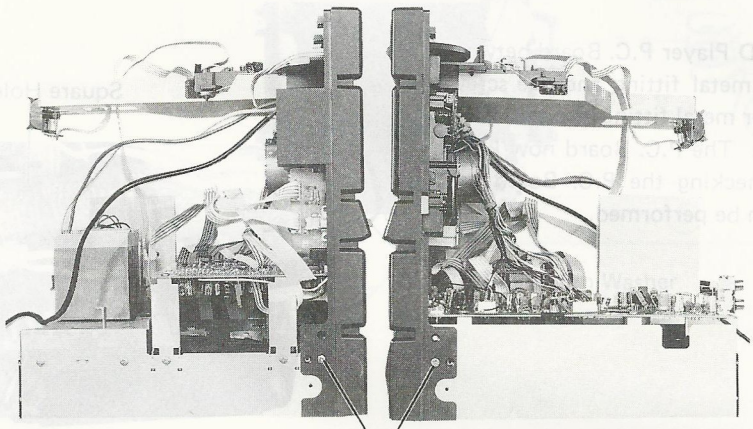
Ⓔ ϕ3 x 10mm
Ⓓ ϕ3 x 8mm, Flat

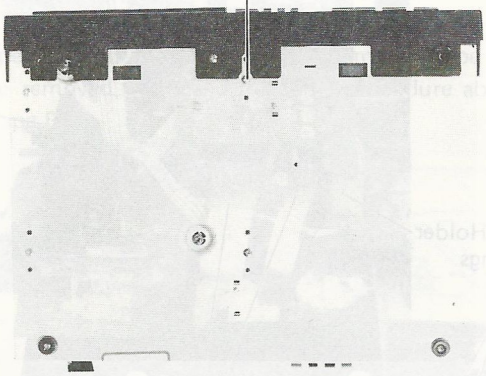

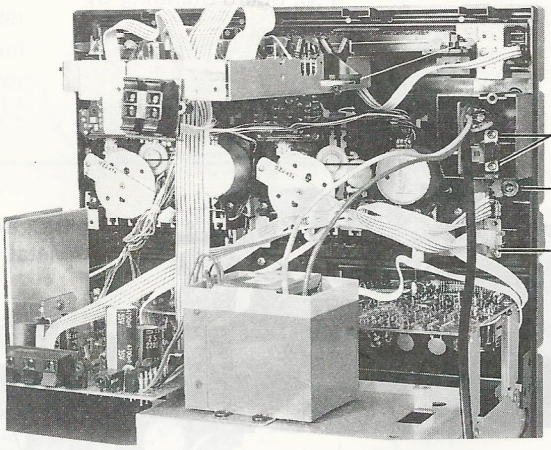
Ⓕ ϕ2.6 x 8mm
Ⓖ ϕ3 x 10mm
with Washer
Ⓗ ϕ2.6 x 8mm

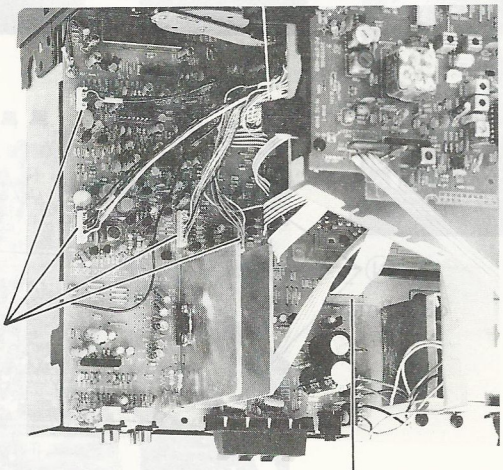
Connector
Ⓘ

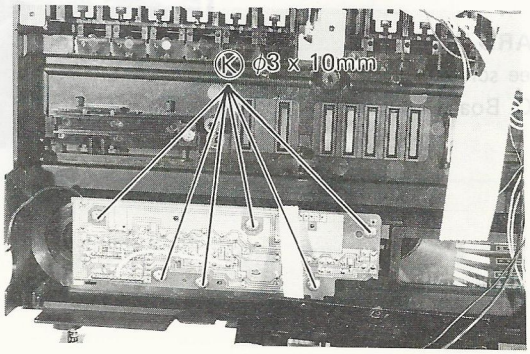
Ⓚ ϕ3 x 10mm

CD PLAYER P.C. BOARD REMOVAL

1. Remove front panel.
2. Remove two screws Ⓛ and one plastic rivet Ⓜ , and the CD Player P.C. Board will be removed (with lead wire connected).

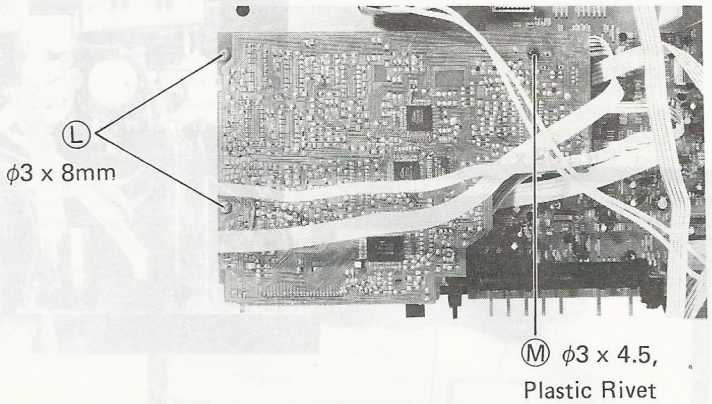

* Insert the edge of the CD Player P.C. Board between the P.C. Board holder metal fitting and the screw, and then insert the holder metal fitting into the square hole on the P.C. Board. The P.C. Board now keeps on standing up and checking the P.C. Board and Mechanism Assembly can be performed.

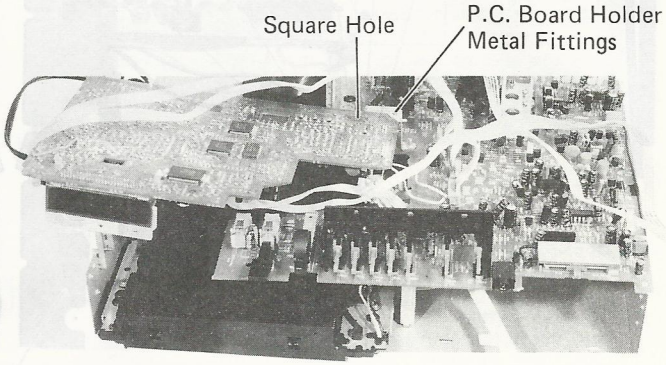

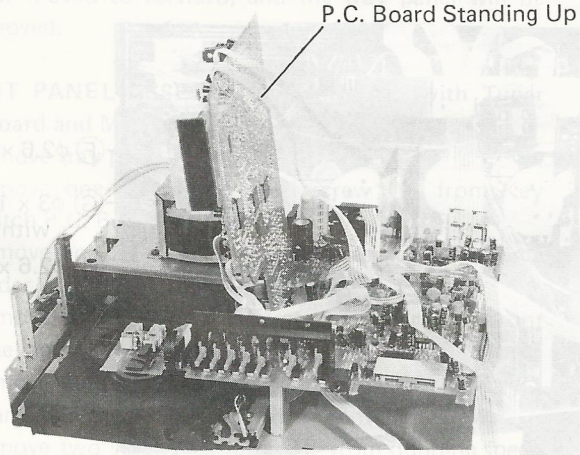

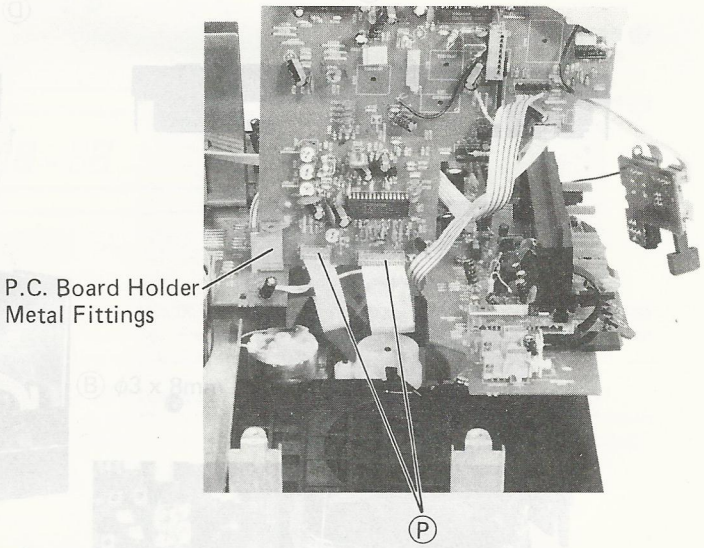

MAIN P.C. BOARD REMOVAL

1. Remove three screws Ⓝ from Main P.C. Board, and the Main P.C. Board will be removed (with lead wire connected).

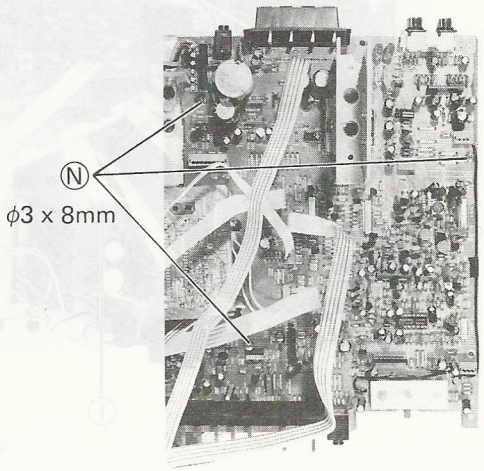

CD PLAYER MECHANISM ASSEMBLY REMOVAL

1. Remove CD Player P.C. Board and Main P.C. Board.
2. Remove four screws Ⓞ from CD player mechanism and two connectors Ⓟ from CD player side, and then Mechanism Assembly will be removed.

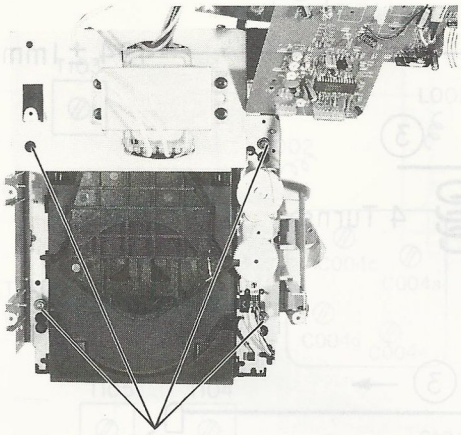

Ⓞ ϕ3 x 8mm with Washer

ASSETTE MECHANISM ASSEMBLY REMOVAL

Tape A and Tape B)

Remove three red screws Ⓠ with cassette holder opened, and the Mechanism Assembly (Tape A) will be removed. Proceed the same procedure above for Tape B.

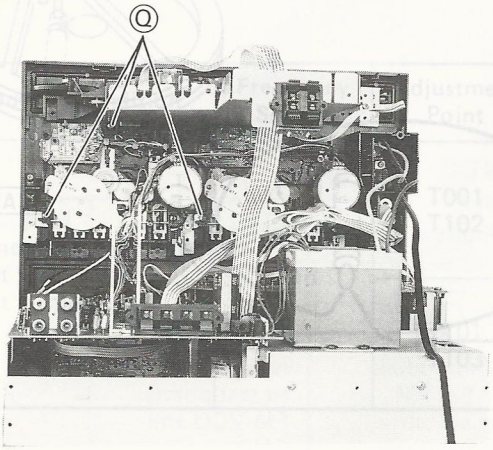

DIAL CORD RESTRINGING

1. Turn drum mounted to tuning capacitor counterclockwise fully and proceed the restringing in steps ① to ⑦.
2. Mount pointer at pointer mounting position after the restringing.

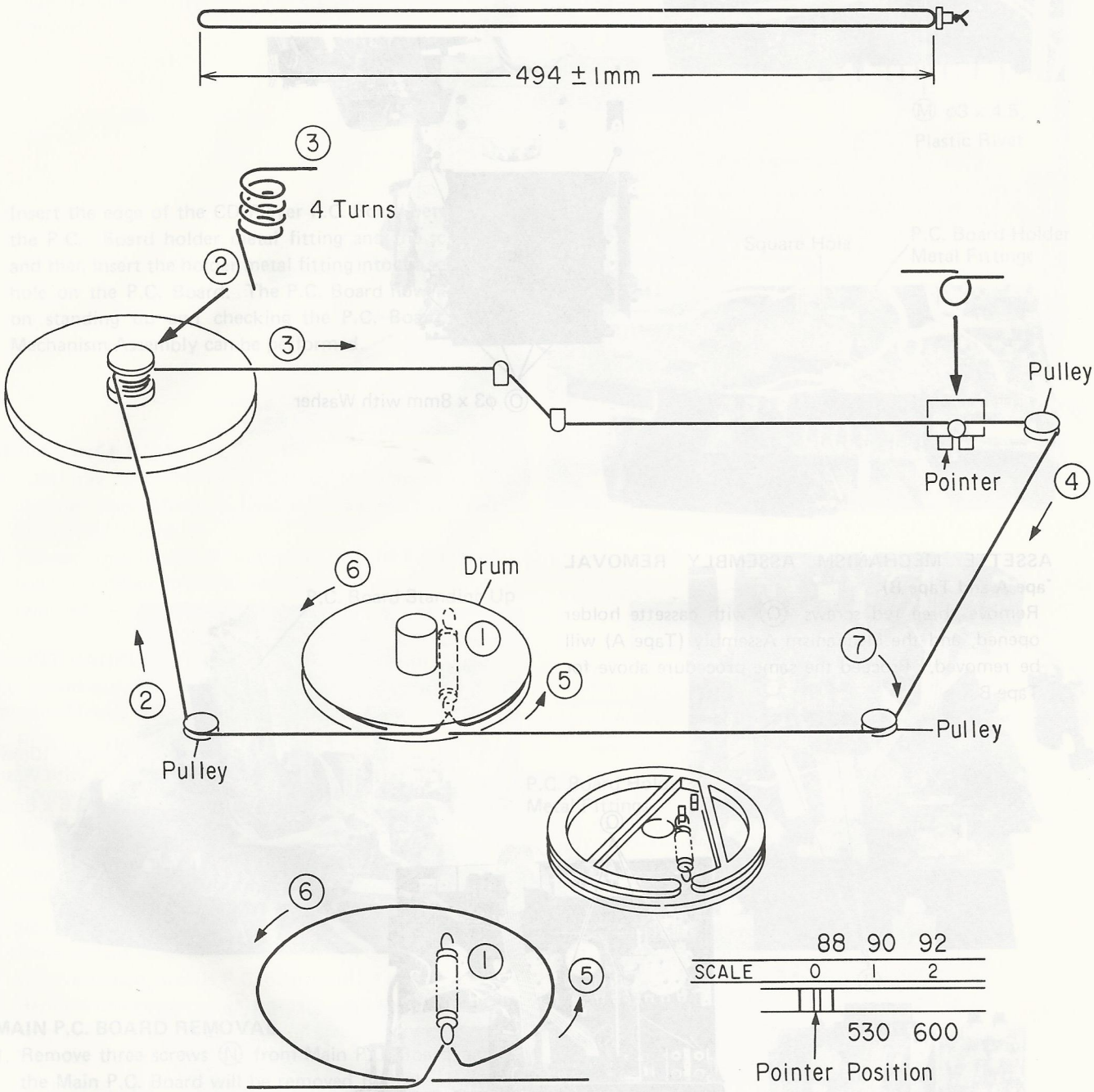

ADJUSTMENTS

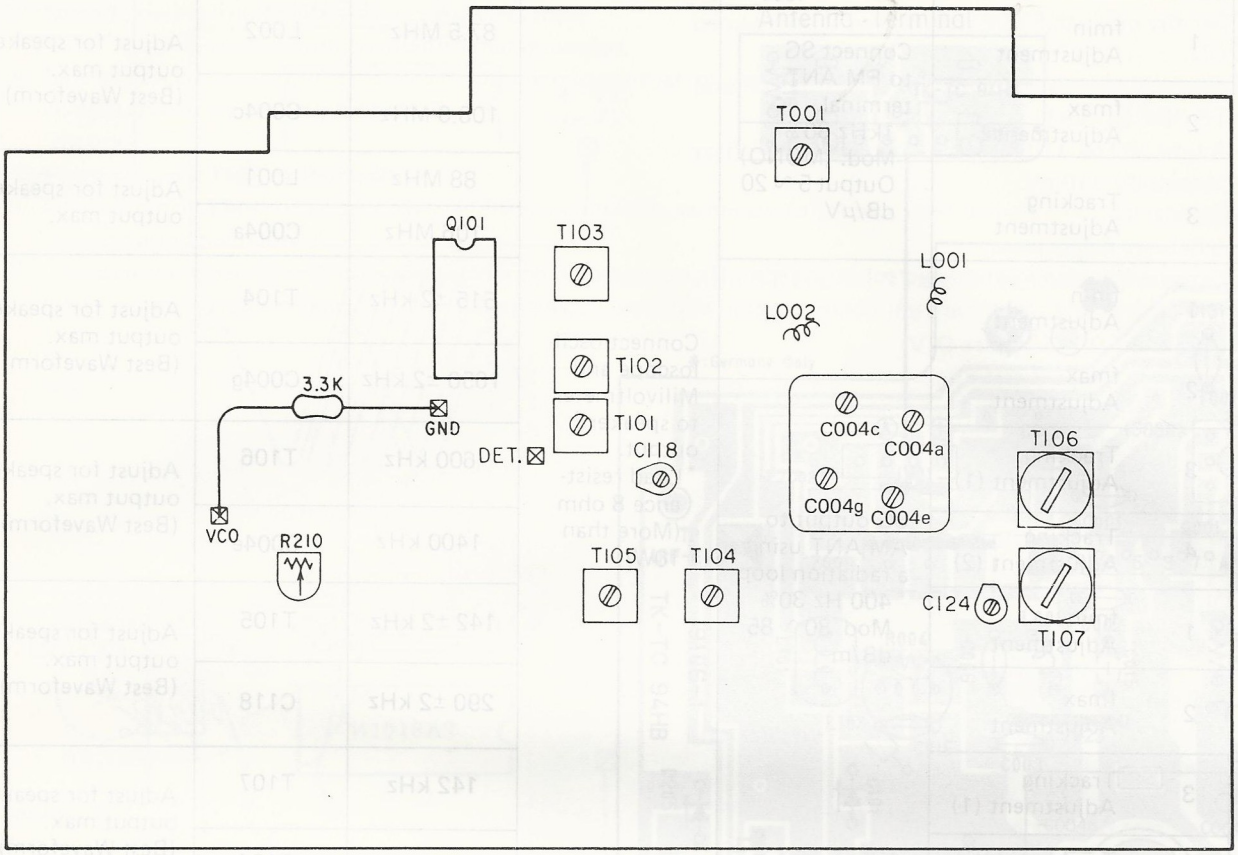

IF ADJUSTMENT

Band	Input	Test Output Condition	Frequency Setting	Adjustment Point	Adjustment Reference
FM	Connect FM IF sweep output to ANT terminal (Weak Signal)	Connect DET test point to IF sweep input terminal.	fmin	T001 T102	Adjust for straight and symmetrical S-curve with max. amplitude.
MW	Connect AM IF sweep output to ANT terminal. (Weak Signal)			T101 T103	Adjust tor max. amplitude with symmetrical response at 460 kHz.

FREQUENCY COVER, TRACKING ADJUSTMENT

Band	Step	Item	Test Input Condition	Test Output Condition	Frequency Setting	Adjustment Point	Adjustment Reference
FM	1	fmin Adjustment	Connect SG to FM ANT terminal. *1kHz 30% Mod. (MONO) Output 5 ∿ 20 dB/μV	Connect oscilloscope and Milivoltmeter to speaker output. *Load resistance 8 ohm (More than 10W)	87.5 MHz	L002	Adjust for speaker output max. (Best Waveform)
	2	fmax Adjustment			108.0 MHz	C004c	
	3	Tracking Adjustment			88 MHz	L001	Adjust for speaker output max.
					106 MHz	C004a	
MW	1	fmin Adjustment	SG output to AM ANT using a radiation loop *400 Hz 30% Mod. 80 ∿ 85 dB/m		515 ±2 kHz	T104	Adjust for speaker output max. (Best Waveform)
	2	fmax Adjustment			1650 ±2 kHz	C004g	
	3	Tracking Adjustment (1)			600 kHz	T106	Adjust for speaker output max. (Best Waveform)
	4	Tracking Adjustment (2)			1400 kHz	C004e	
LW	1	fmin Adjustment			142 ±2 kHz	T105	Adjust for speaker output max. (Best Waveform)
	2	fmax Adjustment			290 ±2 kHz	C118	
	3	Tracking Adjustment (1)			142 kHz	T107	Adjust for speaker output max. (Best Waveform)
	4	Tracking Adjustment (2)			290 kHz	C124	

CAUTION:
When realigning the FM Receiving Frequency, the highest end of the frequency range should not be more than 108 MHz and the lowest end of the frequency range should not be less than 87.5 MHz, in order to comply with FTZ regulations in West Germany.

MULTI-PLEX CIRCUIT ADJUSTMENT (FM STEREO)

Band	Step	Item	Test Input Condition	Test Output Condition	Frequency Setting	Adjustment Point	Adjustment Reference
FM	1	MPX VCO Adjustment	Connect SG to FM ANT terminal. *Apply 60 dB/μV with no modulation. Set FM mode switch S004 to stereo.	Connect frequency counter across 3.3K ohm resistor connected test points FM-VCO and GND.		R210	Adjust for 38 kHz ±0.1 kHz

DESCRIPTION ON LASER PICKUP

Cautions on Laser Pickup Replacement

1. When mounting a new laser pickup, first connect the connector and leads and then unsolder the solder used to protect laser diode on P.C. Board.

★ Use a soldering iron grounded (or leakageless iron).

★ Cover whorking bench with conductive mat grounded.

★ Before proceeding job, always touch the conductive mat or ground lead with your both hands to discharge electric charges developed on your body.

Cautions on Laser Pkckup Removal

1. When removing laser pickup, solder and short-circuit its terminals to protect laser pickup from damage which may be caused during the removal.
2. Disconnect connector and leads after soldering is completed. Do not touch the pickup terminals with your hand.
3. When mounting laser pickup, connect the connector and leads before unsoldering the solder used to short-circuit.

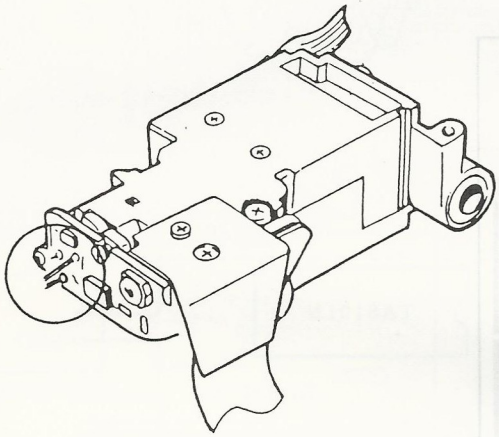

- Solder the patterns shown in illustration before disconnecting connector and leads.

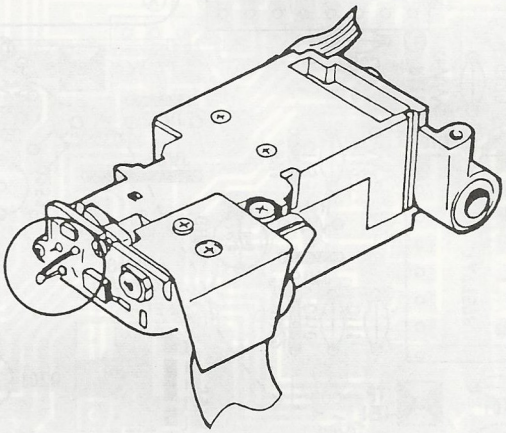

- Terminal Soldered.

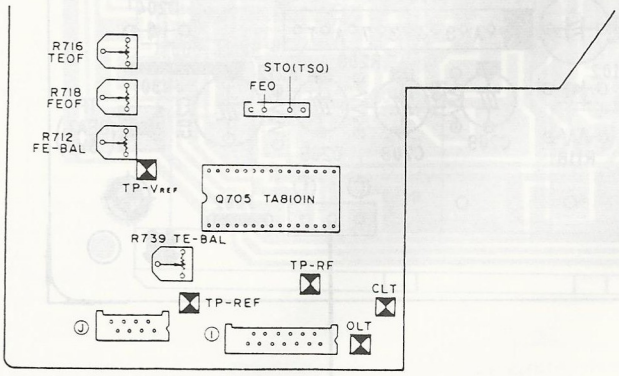

ADJUSTMENT PROCEDURES AFTER LASER PICK-UP REPLACEMENT

1. Focus DC Offset Adjustment
(When TA8101N or R718VR is replaced.)

(1) Set the mode to STOP with power of unit turned ON.
(2) Connect oscilloscope or tester across TP-RF and TP-REF (VREF).
(3) Adjust R718 (100K ohm) so that DC offset obtains 0V ±10mV.

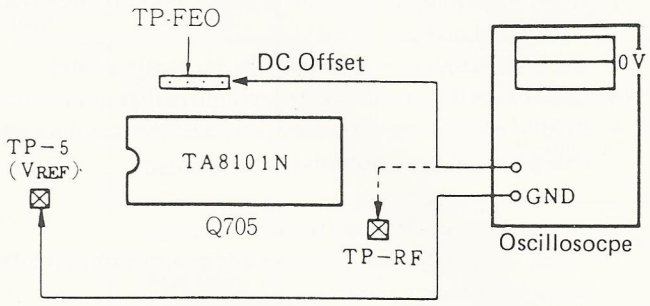

2. Focus Balance Adjustment

(1) Connect oscilloscope across TP-RF and TP-REF (VREF).
(AC range: 0.2V/0.5μsec DIV)
(2) Play back YEDS-7 test disc.
(3) Adjust R712 (20K ohm) so that 3T component of RF signal obtains max.

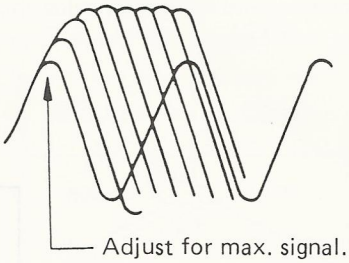

3. Tracking Offset Adjustment
(When TA8101N or R716 is replaced.)

(1) Set the mode to STOP with power of unit turned ON.
(2) Connect oscilloscope or tester across TP-TSO (TE signal) and TP-REF (VREF).
(DC range: 5mV/DIV)
(3) Adjust R716 (100K ohm) so that DC offset obtains 0V ±10mV.

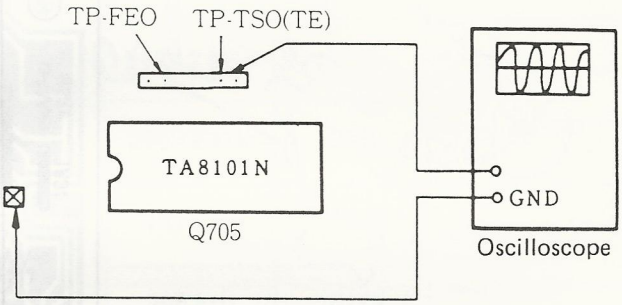

4. Tracking Error Balance Adjustment

(1) Connect oscilloscope across TP-TSO (TE signal) and TP-REF (VREF).
(2) Play back YEDS-7 test disc by PLAY key. While grounding OPEN limit switch (short-circuiting OLT CLT square pin), push PLAY key and set CD microcomputer to TEST mode.
(3) Adjust R739 (100K ohm) so that tracking error signal observed while searching is obtained 0V.

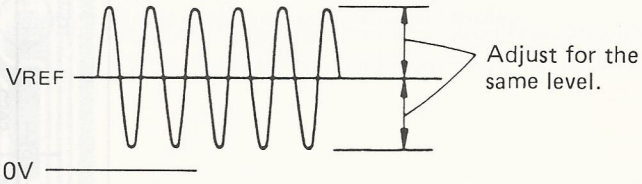

CASSETTE MECHANISM ADJUSTMENT

TAPE SPEED Adjustment

- **Normal Speed**

1. Play back test tape MTT-111 and connect frequency counter to speaker output terminal. Adjust semi-fixed resistor R16A, R16B (5K) on mechanism rear side so that 3 kHz ±10 Hz is obtained. (Make the adjustment for both Tape A and TAPE B.)

- **High Speed**

1. Short-circuit test points besides SPEED selector switch S601. Play back test tape MTT-111 and connect frequency counter to speaker output terminal. Adjust semi-fixed resistor R14A, R14B (1K) so that 6 kHz ±30 Hz is obtained. (Make the adjustment for both TAPE A and TAPE B.)

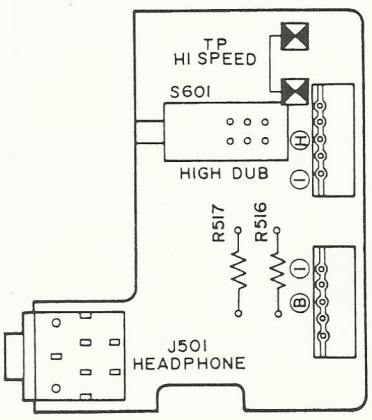

ELECTRICAL PARTS LOCATIONS

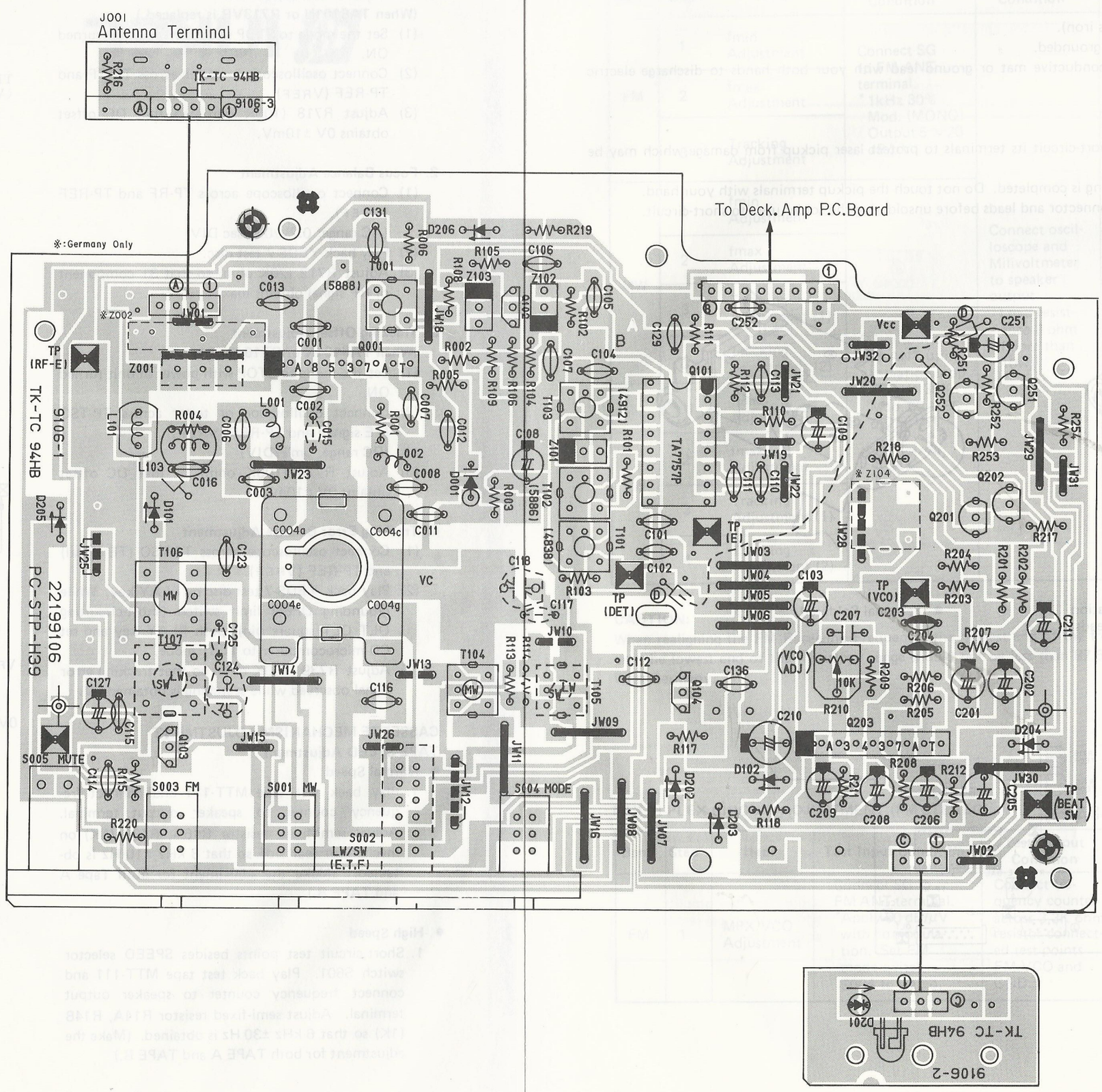

TUNER

SCHEMATIC DIAGRAM

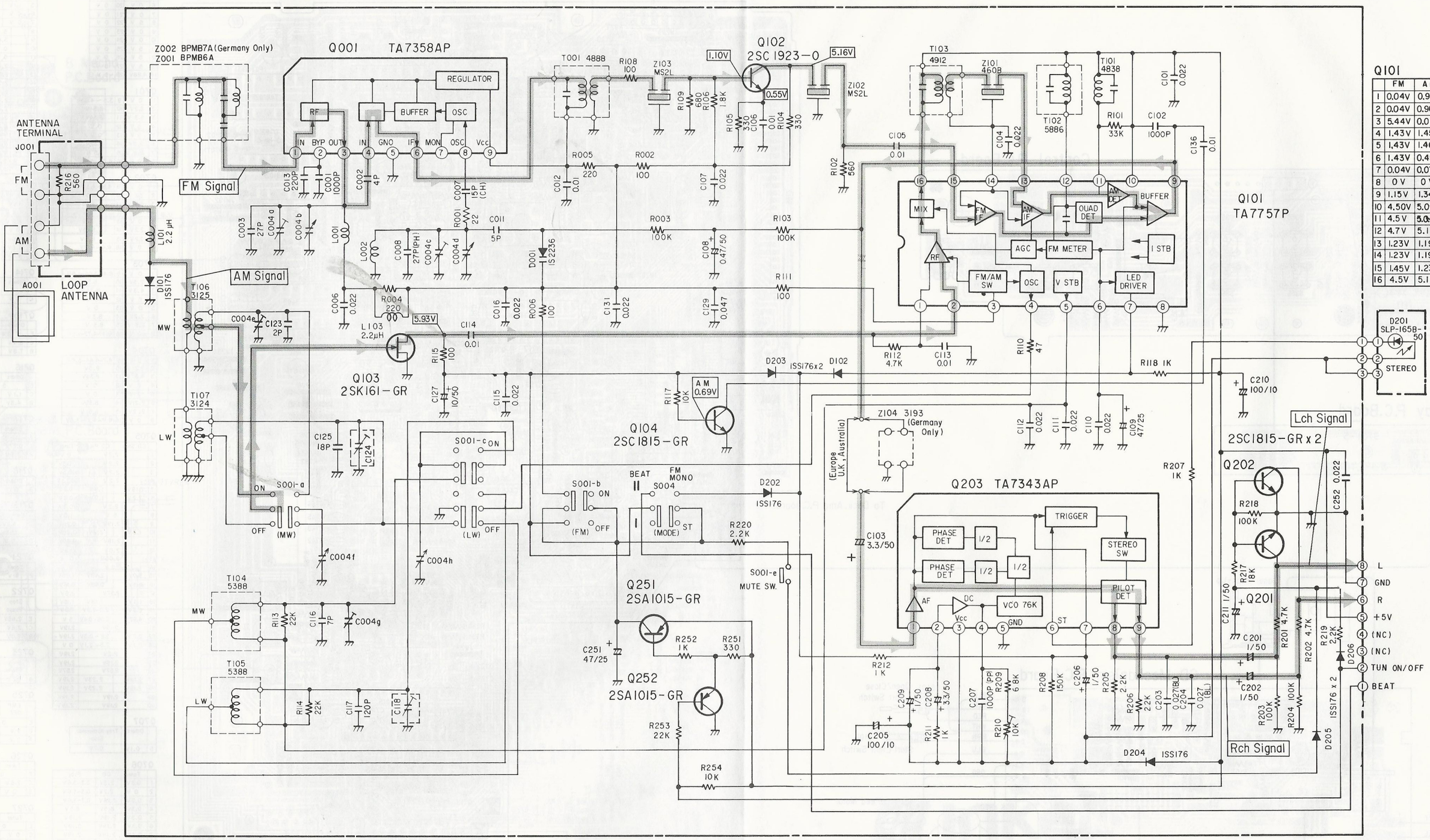

Q001

1	2	3	4	5	6	7	8	9
0.79V	1.51V	5.48V	1.48V	0 V	4.87V	4.10V	4.80V	4.80V

Q101

	FM	AM
1	0.04V	0.97V
2	0.04V	0.96V
3	5.44V	0.01V
4	1.43V	1.45V
5	1.43V	1.46V
6	1.43V	0.45V
7	0.04V	0.07V
8	0 V	0 V
9	1.15V	1.34V
10	4.50V	5.09V
11	4.5V	5.09V
12	4.7V	5.1V
13	1.23V	1.19V
14	1.23V	1.19V
15	1.45V	1.23V
16	4.5V	5.1V

Q203

1	2	3	4	5	6	7	8	9
2.63V	3.09V	4.48V	4.50V	0 V	3.96V	3.84V	1.47V	1.47V

CD PLAYER

ELECTRICAL PARTS LOCATIONS

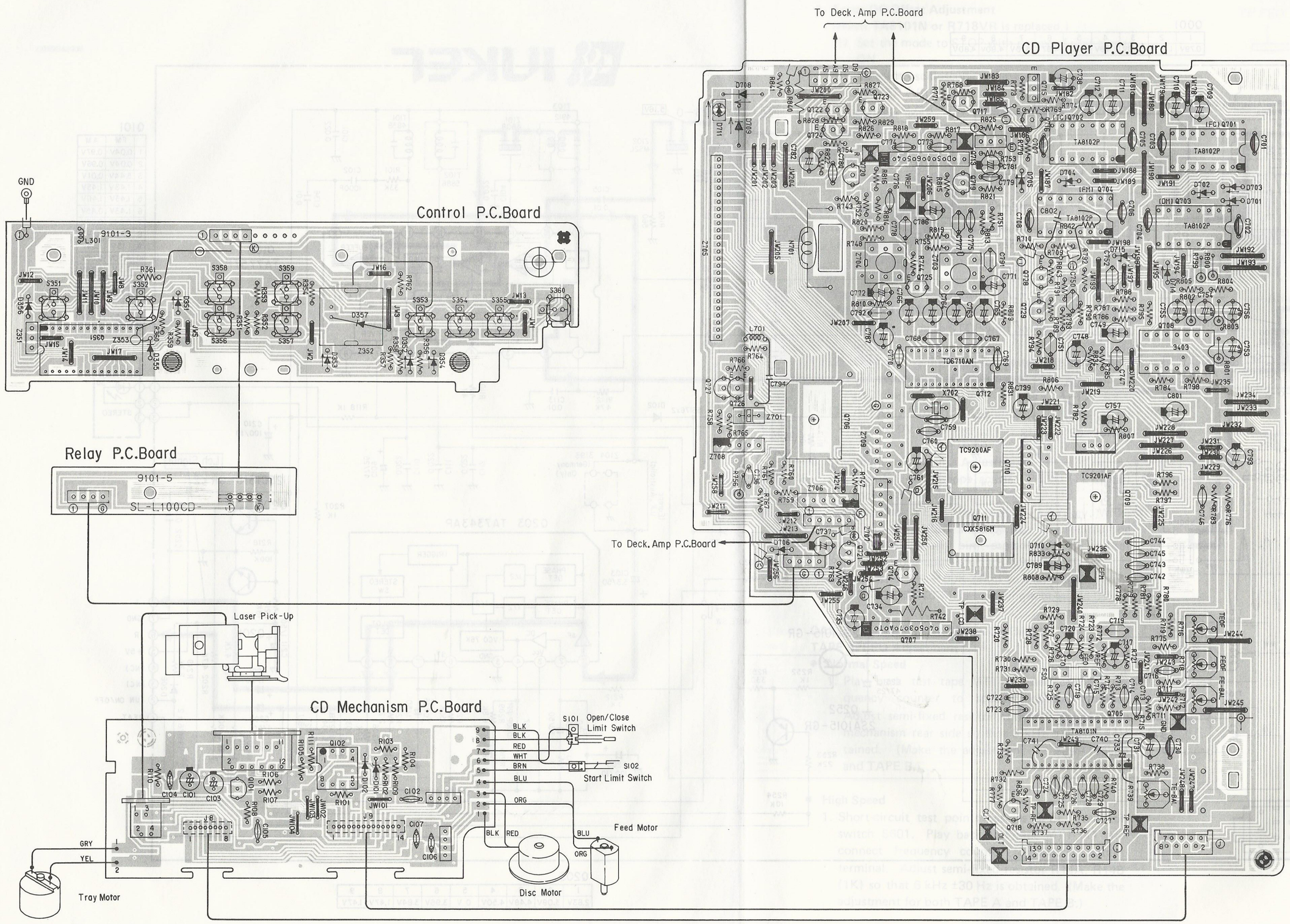

Q351

1	2.4 V	15	0 V
2	0 V	16	5 V
3	5 V	17	5 V
4	5 V	18	5 V
5	0 V	19	5 V
6	0 V	20	0 V
7	0 V	21	0 V
8	5 V	22	0 V
9	0 V	23	0 V
10	0 V	24	0 V
11	5 V	25	0 V
12	5 V	26	0 V
13	5 V	27	0 V
14	4.88V	28	5 V

Q701

1	0 V	9	3.5～4.13V
2	2.2V	10	8.5 V
3	4.3 V	11	8.34V
4	0 V	12	0 V
5	0 V	13	0 V
6	2.2V	14	8.32V
7	2.2 V	15	8.5 V
8	0 V	16	4.5～4.9V

Q702

1	0 V	9	4.6～4.3～4.0V
2	2.2 V	10	8.5V
3	4.3 V	11	8.38V
4	0 V	12	0 V
5	0 V	13	0 V
6	2.2V	14	8.35V
7	2.2V	15	8.5V
8	0 V	16	4.4～4.0V

Q703

1	0 V	9	6.4～3.94～1.5V
2	2.3V	10	8.5V
3	4.3 V	11	8.33V
4	0 V	12	0 V
5	0 V	13	0 V
6	2.2V	14	8.3 V
7	2.3 V	15	8.5 V
8	0 V	16	6.4～4.72～1.5V

Q704

1	0 V	9	4.7～4.44～3.4V
2	2.2 V	10	8.5V
3	4.3 V	11	8.34V
4	0 V	12	0 V
5	0 V	13	0 V
6	2.21V	14	8.35V
7	2. 2V	15	8.5 V
8	0 V	16	4.7～4.21～3.6V

Q705

	CD Stop	CD Play	Tuner
1		2.2V	0 V
2		2.2 V	0.3V
3		2.2 V	0.3V
4		2.2 V	0.33V
5	2.19V	1.9 V	0.3V
6	2.2 V	1.9 V	0.3V
7		2.2 V	0.3V
8		5 V	1.0V
9		2.19V	0.26V
10	1.3 V	2.2V	0.26V
11		2.18V	0.45V
12		2.0V	0.3V
13		2.05V	0 V
14		0 V	0 V
15	5.0V	2.48V	1.05V
16	0.5V	0.88V	0.16V
17		2.57V	2.6V
18	1.1V	1.18V	1.15V
19	2.3V	2.5～2.8V	2.5V
20	4.97V	2.56～0.4V	5 V
21		2.19V	2.19V
22	2.2 V	2.2～2.3V	2.19V
23	2.2 V	2.3～2.1V	0 V
24		2.2V	2.19V
25		2.19V	2.19V
26		2.57V	2.57V
27	2.19V	2.23V	2.19V
28	2.19V	2.23V	2.19V
29		2.19V	2.19V
30		2.19V	2.19V

Q707

	Others	Tray Abnormal Stop
5	0.1V	0.7V

Q708

	Tuner	CD	Play
1	0.3V	2.3V	0.3～3.6V
2	0 V	2.2V	0.3～3.6V
3	0.3V	2.18V	0.3～3.6V
4	0.3V	8.5V	8.5V
5	0.3V	2.19V	2.19V
6	0.3V	2.19V	2.19V
7	0.3V	2.19V	2.19V
8	0.3V	2.18V	2.15～2.35V
9	0.3V	2.18V	2.2V
10	0.3V	2.18V	2.2V
11	0 V	0 V	0 V
12	0.3V	3 V	2.9～3.1V
13	0.2V	3 V	2.9～3.1V
14	0.2V	2.1V	1.7～2.6V

Q712

	Tuner	CDPlay
1		2.78V
2		0 V
3		1.6V
4		0 V
5	1.1V	2.5V
6	0 V	2.5V
7	0 V	2.5V
8		5 V
9		3.6V
10		0 V
11		5 V
12		2.7V
13		2.5V
14		2.5V
15		1.1V
16		2.1V
17		2.3V
18		2.3V
19		2.3V
20		—
21		2.3V
22		2.1V
23		2.5V
24		2.5V

Q713

1	9 V
2	4.6V
3	4.6 V
4	4.6 V
5	0 V
6	4.6V
7	4.6V
8	4.6V

Q714

	Others	Troy Abnormal Stop
C	5 V	0 V

Q715

	Others	Tuner
E	8.4V	
C	8.4 V	0.3V
B	7.6V	8.5V

Q716

	Others	Tuner
E	5 V	
C	1.1V	5 V
B	4.3V	5.1V

Q717

	Others	Tuner
E	0 V	
C	0.77V	8.55V
B	1.3 V	0 V

Q718

	Others	Play
B	0 V	0.6V

Q719.720

	EMP OFF	O N
S	4.6V	
G	6.18V	0 V
D	0 V	4.6V

Q721

	Tuner	C D
2	5 V	

Q722

	Stop Pause	Play
E	2.65V	0.1V
C	2.6V	0 V
B	2.0V	0 V

Q723

	Stop Pause	Play
B	0.7 V	0 V

Q725

	EMP OFF	O N
E	0 V	
C	9 V	0 V
B	0 V	0.6V

Q726

	Tuner	C D
E	0 V	
C	2.6 V	0 V
B	0 V	0.6V

Q727

	Tuner	C D
E	0 V	
C	0 V	0.6V
B	0.6V	0 V

Q728

	Others	Close Open
C	0 V	5 V

50msec

CD PLAYER

SCHEMATIC DIAGRAM

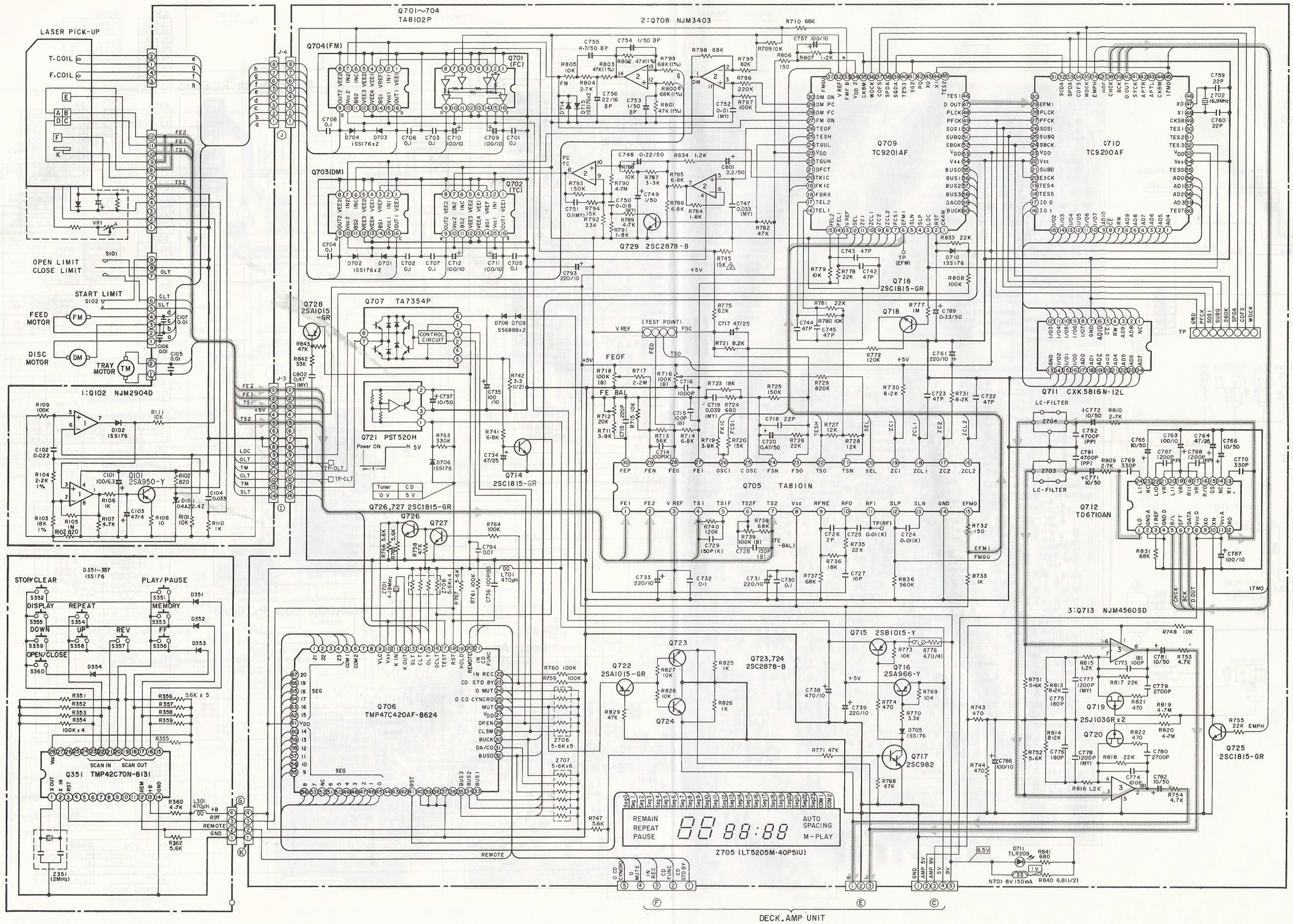

DECK. AMP

ELECTRICAL PARTS LOCATIONS

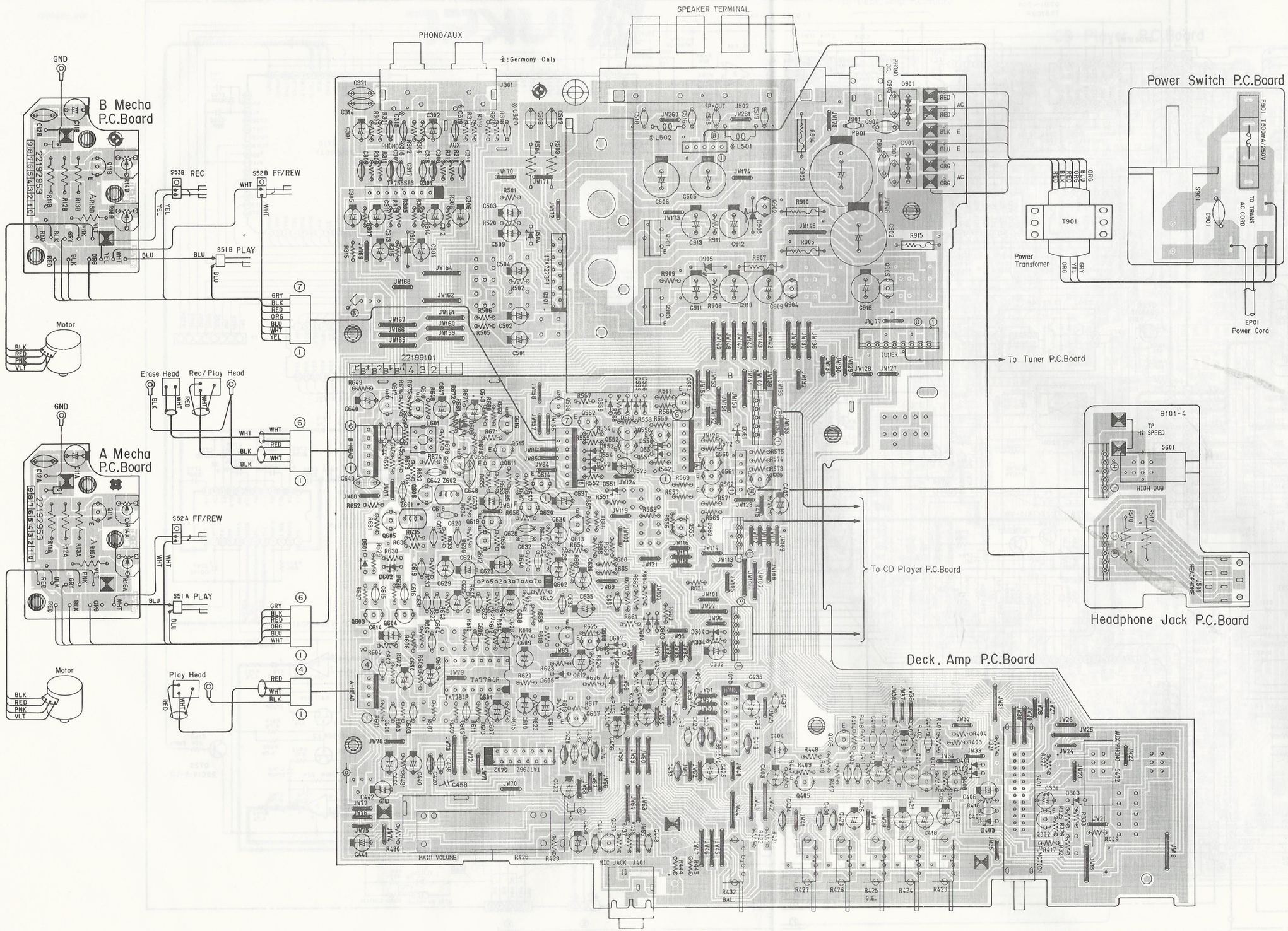

Q301

1	8.23V
2	3.68V
3	3.7V
4	3.7V
5	0V
6	3.7V
7	3.7V
8	3.68V
9	8.24V

Q302

	Others Func	Tun.
E	0 V	
C	5V	0V
B	0V	0.6V

Q401

1	4.05V	9	4.05V
2	2.7V	10	2.7V
3	3.4V	11	4.05V
4	3.4V	12	2.7V
5	3.4V	13	4.05V
6	6.7V	14	2.7V
7	4.05V	15	4.05V
8	0V	16	2.7V

Q402

1	4.0V	9	4.0V
2	2.7V	10	2.7V
3	3.4V	11	4.05V
4	3.4V	12	2.7V
5	3.4V	13	4.05V
6	6.7V	14	2.7V
7	4.0V	15	4.05V
8	0V	16	2.7V

Q405 Q406

E	1.4V
C	4.8V
B	2.0V

Q407

E	0V
C	3.4V
B	0.65V

Q408

	Normal	Mute
E	0V	3.3V
C	——	
B	2.7V	

Q501

1	1.7V
2	11mV
3	0V
4	11mV
5	1.7V
6	11.26V
7	16.7V
8	1.68V
9	34.8V
10	0V
11	1.68V
12	16.7V

Q551

C	Ⓑ Stop Ⓐ Play	Ⓑ Play Rec
	0V	5V
B	Stop	Rec
	0V	0.6V

Q552

	Others Stop	Play Rec FF/REW
C	7.6V	0V
B	0V	0.6V

Q553

C	Ⓑ Stop Ⓐ Play	Ⓑ Play Rec
	0V	5V
B	Stop	Play
	0V	0.6V

Q554

	Stop	Ⓐ Play FF/REW
C	7.6V	0V
B	0V	0.6V

Q555

	Rec Fuct→Aux, Tuner	Others
C	4.98V	0V

Q556

B	Ⓐ Play Rec	Others
	0.6V	0V

Q558

	Others	Hi Dubbing
C	0V	7.8V
B	FF/REW Play	Hi Dubbing
	0.6V	0V

Q559

C	Hi Dubbing Ⓐ Play Ⓑ Rec	Others
	Tape 9V	0V
B	Others	Ⓐ Play / Ⓑ Play Rec
	0V	0.6V / 0V

Q560

C	Nor Speed	Hi Dubbing SW ON
	0V	0.9V
B	Others	Ⓐ Play
	0V	0.6V

Q561

B	Others	Ⓑ Rec
	0V	0.6V

Q562

B	Others	Tape
	0V	3.8V

Q601

1	8.16V
2	2.23V
3	Others 0.12V Ⓑ Play 1.5V
4	2.23V
5	2.16V
6	2.17V
7	2.17V
8	0V
9	2.17V
10	——
11	2.17V
12	2.17V
13	2.17V
14	2.23V
15	Nor Dubbing 0.2V Hi Dubbing 9V
16	2.23V

Q602

1	1.3V
2	1.35V
3	3.8V
4	8.1V
5	0V
6	3.8V
7	1.35V
8	1.3V
9	0V

Q603 Q604

D	2.1V	
G	Play	Rec
	2.1V	-7.7V
S	2.1V	

Q605 Q606

G	Others	Rec
	0V	-5.5V

Q607, 608

B	Stop	Play
	0.6V	0V

Q609

	Stop	Play
E	3 V	
C	3V	0V
B	2.47V	4.7V

Q610

	Play	Rec
C	3.6V	0V
B	0V	0.6V

Q613

	Others	Rec
E	0V	0~1.2V
B	——	0~1.5V

Q615

	Others	Rec
B	0V	0.6V

Q616

	Play	Rec
C	0.6V	0V

Q618

	Play	Rec
E	0V	0.06V
B	0V	0.1V

Q901

E	8.4V
C	16V
B	9.8V

Q903

E	5.0V
C	16.2V
B	5.7V

DECK. AMP

SCHEMATIC DIAGRAM

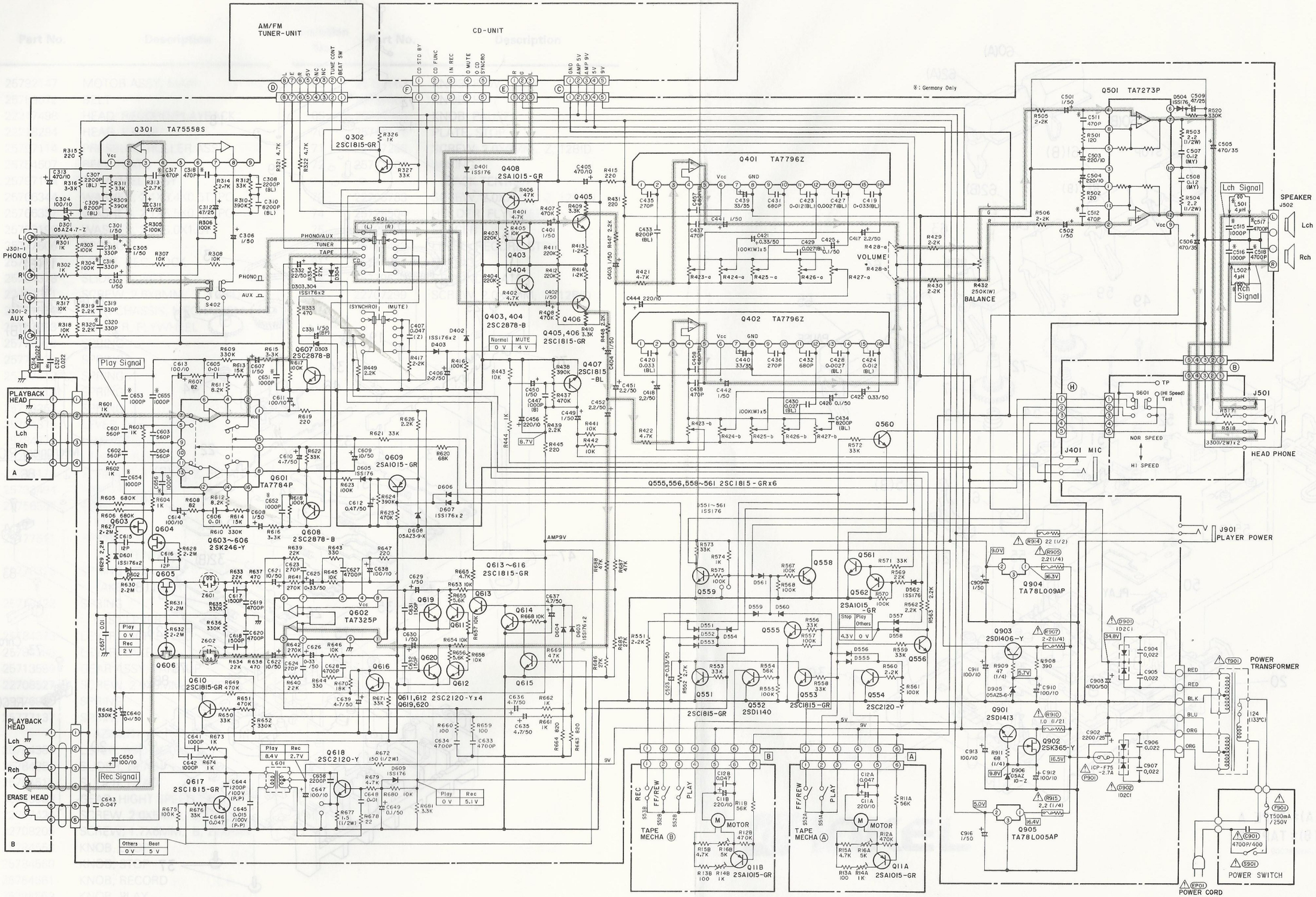

CAUTION:
The ⚠ mark, the Location No. circled with oval in the schematic diagram and the parts list designate components which have special characteristics important for safety and should be replaced only with types identical to those in the original circuit or specified in the parts list.

MECHANISM EXPLODED VIEW (UPPER)

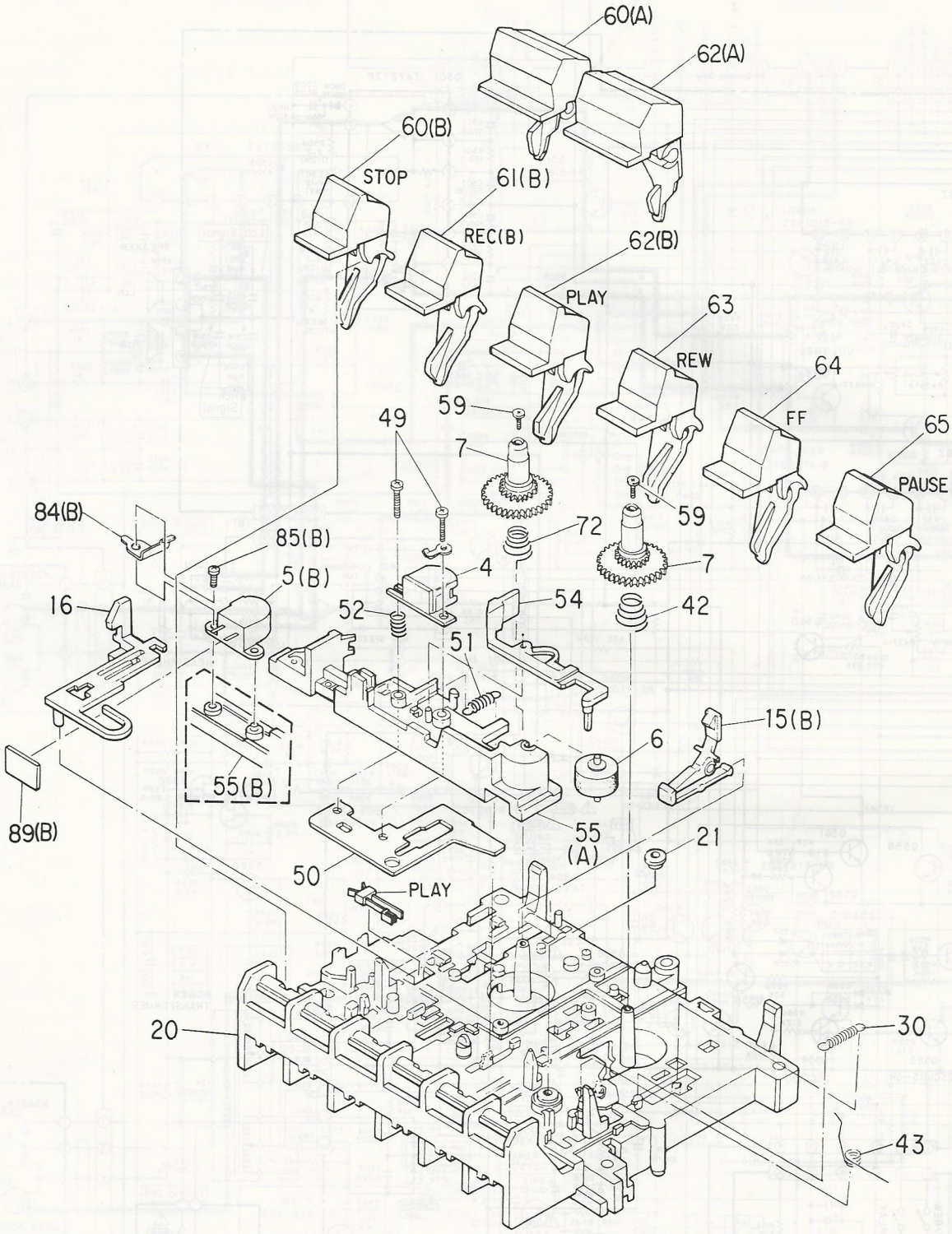

NOTE (A)= TAPE A
(B)= TAPE B

NOTE: Parts excluded in the parts list are not stocked since they are seldom required for routine service. Some delay should be anticipated when ordering these items.

MECHANISM EXPLODED VIEW (LOWER)

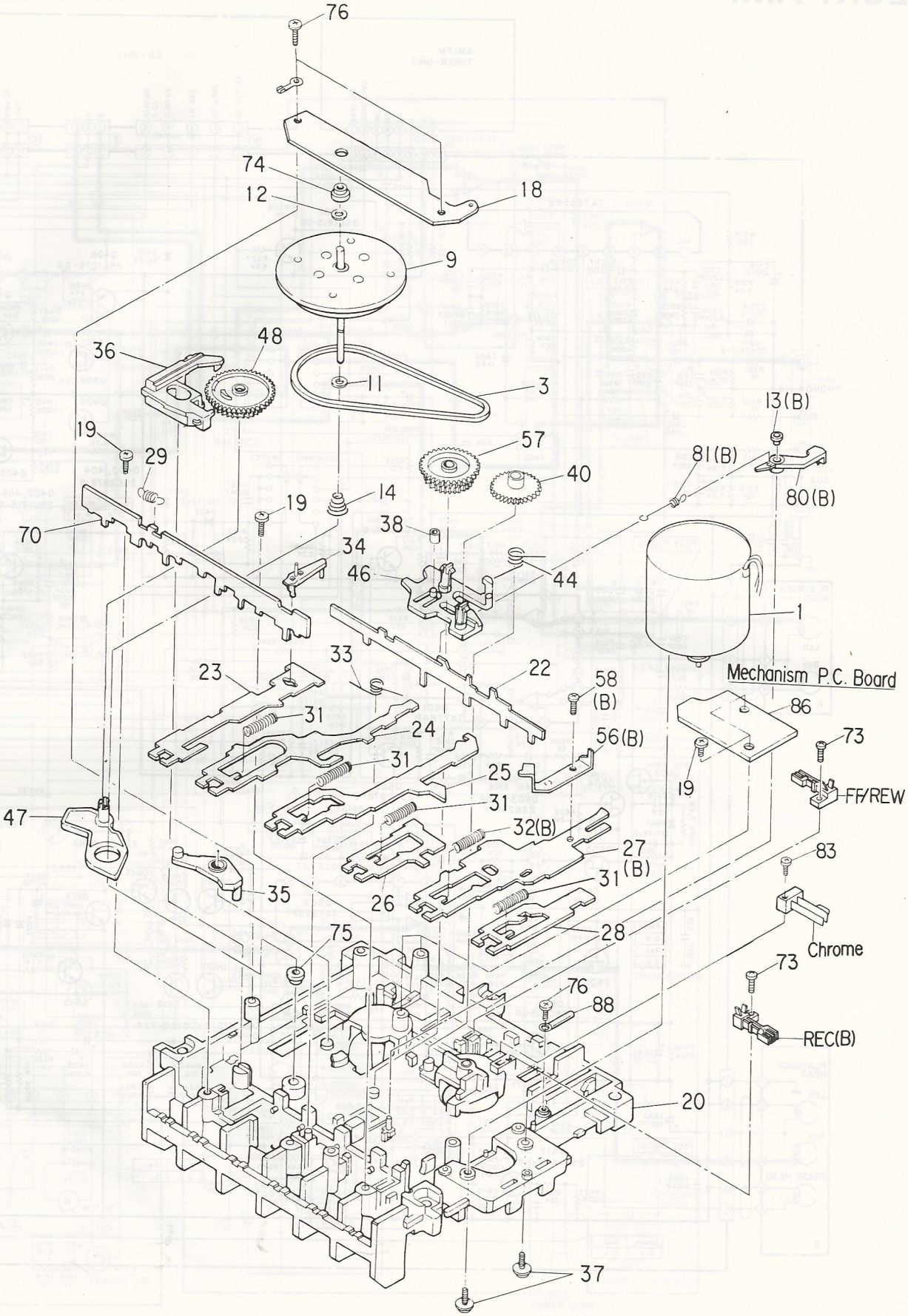

NOTE: Parts excluded in the parts list are not stocked since they are seldom required for routine service. Some delay should be anticipated when ordering these items.

CASSETTE MECHANISM PARTS LIST

Location No.	Part No.	Description
1	25792147	MOTOR ASSY, MAIN
3	25759072	BELT
4	22217498	HEAD, RECORD/PLAYBACK
5	22218294	HEAD, ERASE
6	25797114	PRESSURE ROLLER ASSY
7	25754507	REEL PLATE
9	25797144	FLYWHEEL ASSY
11	25766344	WASHER, 2.1X3.4X0.5T, PO
12	25766337	WASHER, 2.1X5.5X0.3T, PO
13	25783199	WASHER, 2.0X5.0X1.5T
14	25777606	SPRING
15	25784377	LEVER, REC. LOCK
16	25784378	SLIDER, EJECT
19	22707301	SCREW, 2.6X8MM, Z, 12BID
20	25781322	MAIN CHASSIS, MECHANISM
21	25752233	HOLDER, FLYWHEEL
29	25776900	SPRING
30	25776938	SPRING
31	25777512	SPRING
32	25777513	SPRING
33	25778353	SPRING
34	25784375	LEVER, PLAY LOCK
35	25784376	LEVER, PAUSE
36	25784381	LEVER, ASO
37	22707174	SCREW, 2.6X6MM, Z, FLPAN
38	25733494	SPACER, 2X2MM
40	25756507	GEAR FAST,B
42	25777511	SPRING BACK TENTION
43	25778323	SPRING TAKE-UP LEVER
44	25778422	SPRING FAST LEVER
46	25784379	LEVER, HIGH SPEED
47	25784380	LEVER, TAKE-UP
48	25713599	GEAR ASSY, TAKE-UP
49	22708527	SCREW, 2.0X8MM, Z, BID
51	25776986	SPRING
52	25777137	SPRING AZIMUTH
54	25784383	LEVER, ASO DETECT
55	25784385	SLIDER, HEAD
55	25784515	SLIDER, HEAD
57	25793003	GEAR, HIGHT SPEED CLUTCH
58	22707426	SCREW, 2.0X5MM, Z, DTBID
59	22708205	SCREW, 1.7X6MM, B, 2TXPAN
60A	25784558	KNOB, STOP
60B	25784560	KNOB, STOP
61	25784561	KNOB, RECORD
62A	25784559	KNOB, PLAY
62B	25784562	KNOB, PLAY
63	25784563	KNOB, REW
64	25784564	KNOB, FF
65	25784565	KNOB, PAUSE
70	25749127	PLATE, STOP
71	22707298	SCREW, 2.0X6MM, Z, 12BID
72	25777564	SPRING BACK TENTION
73	22708783	SCREW, 2.0X7MM, Z, 12PAN
74	25725504	HOLDER, FLYWHEEL
75	25726796	SPACER
80	25784483	LEVER, RECORD STOP
81	25776961	SPRING
84	25779630	GROUND PLATE
85	22707299	SCREW, 2.0X8MM, Z, 12BID

CD PLAYER MECHANISM EXPLODED VIEW

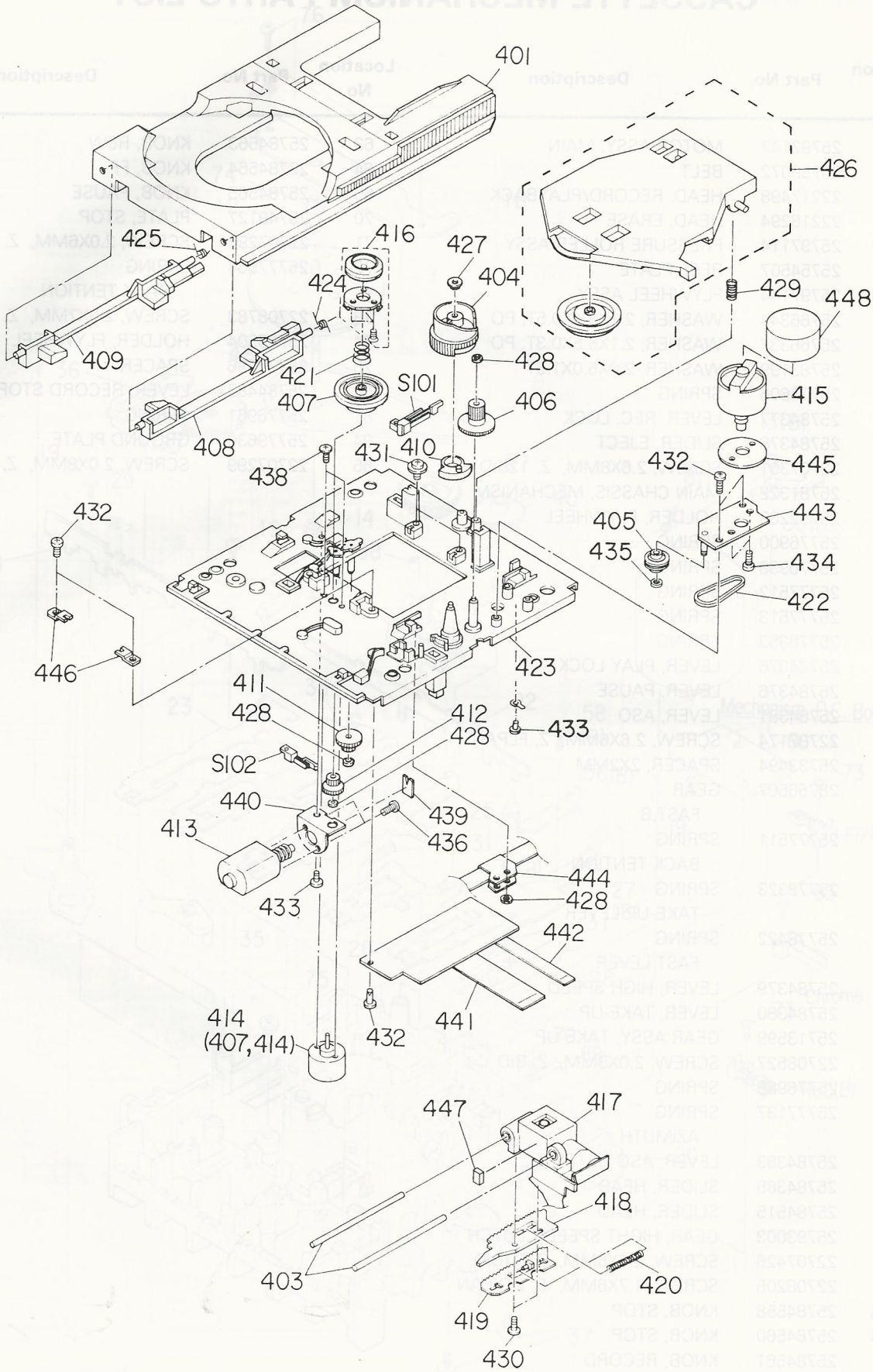

NOTE: Parts excluded in the parts list are not stocked since they are seldom required for routine service. Some delay should be anticipated when ordering these items.

CD PLAYER MECHANISM PARTS LIST

Location No.	Part No.	Description
401	20778195	DISC TRAY
404	20727166	GEAR, CAM
405	20727207	GEAR PULLEY
406	20727165	GEAR, DRIVE B
407	20723183	DISC TABLE ASSY
408	20754257	DISC LIFTER, RIGHT
409	20754256	DISC LIFTER, LEFT
410	20754255	CAM SWITCH
411	20727206	PULLEY GEAR, DRIVE A
412	20727205	PULLEY GEAR, DRIVE B
413	25792273	FEED MOTOR ASSY
414	25792272	DISC MOTOR ASSY
415	25792271	TRAY MOTOR ASSY
416	25792142	CENTER RING ASSY
417	22155241	LASER PICK UP, OPH-41
418	20727188	RACK GEAR, A-2
419	20727189	RACK GEAR, B-2
420	25777533	SPRING RACK GEAR
421	25777637	SPRING, CENTER RING CENTER RING
422	25759094	BELT DRIVE
423	20743204	MAIN CHASSIS
424	25778401	SPRING
425	25778400	SPRING
426	25792076	LEVER ASSY, CLAMPER
427	25783444	BUSHING, BLACK
428	25783443	BUSHING
429	25777531	SPRING
430	22707670	SCREW, 1.7X4MM, B, PAN
431	22708208	SCREW, 2.6X10MM, Z, 2DTPAN
432	22707979	SCREW, 2.6X8MM, Z, 2DTBID
433	22707350	SCREW, 2.6X5MM, Z, DTBID
434	22708528	SCREW, 2.6X3MM, Z, BID
435	20776135	WASHER, 2.1X5X0.5MM, PO
436	22701467	SCREW, 2.6X3MM, B, BID
438	22707725	SCREW, 1.7X2.5MM, N, PAN
439	25779512	SPRING DRIVE
447	20748390	CUSHION

CABINET EXPLODED VIEW

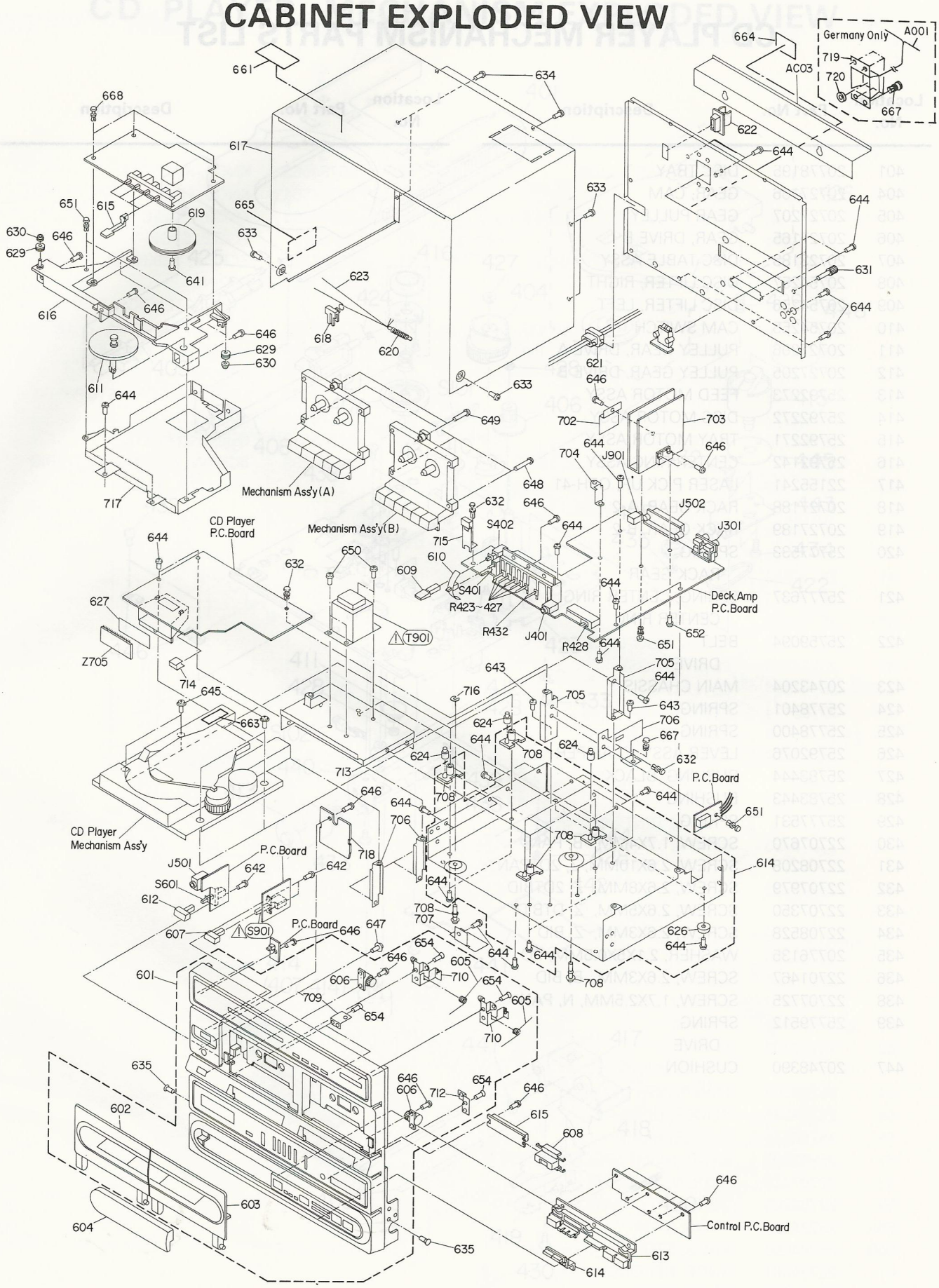

NOTE: Parts excluded in the parts list are not stocked since they are seldom required for routine service. Some delay should be anticipated when ordering these items.

CABINET PARTS LIST

Location No.	Part No.	Description
601	22829002	FRONT PANEL ASSY
602	25877032	CASSETTE HOLDER ASSY LEFT
603	25877007	CASSETTE HOLDER ASSY
604	25872540	TRAY PANEL
605	25778465	SPRING EJECT
606	25889098	DAMPER
607	25888158	BUTTON POWER
608	25888160	KNOB SLIDE VOLUME
609	25886473	KNOB PUSH
610	25888078	KNOB LEVER
611	25888082	KNOB TUNING
612	25888159	BUTTON DUBBING
613	25888161	BUTTON CD
614	25888162	BUTTON CD
615	25888293	BUTTON BAND
616	22829013	TUNER FRAME ASSY
617	20015568	TOP COVER
618	22731004	POINTER
619	22742322	DIAL DRUM
620	25776387	SPRING
621	25844322	BUSH
622	22757138	ANTENNA HOLDER
624	25761545	CUSHION, MECHANISM
626	22874027	FOOT, RUBBER
627	22766312	MASK SHEET
628	25872539	DECORATION PLATE SLIDE VOLUME
629	22742370	PULLEY
630	25783226	BUSHING
631	20794122	SCREW, GROUND
632	22705020	PLASTIC RIVET, 3.0X4.5MM
633	22707885	SCREW, 3.0X8MM, B, 2DTBID
634	22708633	SCREW, 3X8MM, 2DTBID
635	22707909	SCREW, 3.0X8MM, Z, 2DTFLT
641	22708532	SCREW, 2.6X6MM, Z, BID
642	22707979	SCREW, 2.6X8MM, Z, 2DTBID
643	22707910	SCREW, 3.0X6MM, Z, 2DTBID
644	22707842	SCREW, 3.0X8MM, Z, 2DTBID
645	22708045	SCREW, 3.0X8MM, Z, 2DTPAN
646	22707826	SCREW, 3.0X10MM, Z, 2DTBID
647	22708048	SCREW, 3.0X10MM, Z, TPAN
648	22707843	SCREW, 3.0X16MM, R, 2DTBID
649	22707805	SCREW, 3.0X20MM, R, 2DTBID
650	22707040	SCREW, 4.0X6MM, B, BID
651	22705022	PLASTIC RIVET, 3.0X5.5MM
652	22708118	SCREW, 3.0X8MM, C, 2DTBID
654	22708292	SCREW, 3.0X10MM, Z, 11FLT
661	22907409	LABEL, SCREW
663	22907153	LABEL, LASER-2
664	22906509	CAUTION LABEL, CLASS-U.K.
664	22906500	CAUTION LABEL EUROPE, AUSTRALIA, GERMANY
665	22950885	CAUTION LABEL
667	22705021	PLASTIC RIVET 3.0X3.5MM
668	22705026	PLASTIC RIVET 3.0X6.5MM
A001	22124502	ANTENNA FEEDER GERMANY

PARTS LIST

CAUTION:
The ⚠ mark, the Location No. circled with oval in the schematic diagram and the parts list designate components which have special characteristics important for safety and should be replaced only with types identical to those in the original circuit or specified in the parts list.

ABBREVIATIONS

1. **CAPACITOR:** CD = Ceramic Disk, PF = Plastic Film, BL = Barrier Layer, EL = Electrolytic, MY = Mylar, PP = Polypropylene, PS = Polystyrene, TT = Tantalum, PE = Polyethylene
   MFD = Microfarad, PF = Picofarad, V = Voltage, NP = Non Polarity
2. **RESISTOR:** CF = Carbon Film, CC = Carbon Composition, OMF = Oxide Metal Film, MF = Metal Film
   K = Kilo (1000), M = Mega (1000000)
3. **TOLERANCE**

Symbol	G	J	K	M	N	Z	P
%	±2	±5	±10	±20	±30	−20+80	0+100

Symbol	C	D
pF	±0.25	±0.5

IC/TRANSISTORS (TUNER)

Location No.	Part No.	Description
Q001	B0325502	IC, TA7358AP
Q101	B0358070	IC, TA7757P
Q102	A6319020	TRANSISTOR, 2SC1923-O
Q103	A6042640	TRANSISTOR, 2SK161-GR, FET
Q104	A6317460	TRANSISTOR, 2SC1815NEW-GR
Q201	A6317460	TRANSISTOR, 2SC1815NEW-GR
Q202	A6317460	TRANSISTOR, 2SC1815NEW-GR
Q203	B0325355	IC, TA7343AP
Q251	A6534060	TRANSISTOR, 2SA1015-GR
Q252	A6534060	TRANSISTOR, 2SA1015-GR

DIODES (TUNER)

Location No.	Part No.	Description
D001	A7289000	DIODE, 1S2236
D102	A7160570	DIODE, 1SS176
D201	22119308	DIODE, SLP165B, LED
D202	A7160570	DIODE, 1SS176
D203	A7160570	DIODE, 1SS176
D204	A7160570	DIODE, 1SS176
D205	A7160570	DIODE, 1SS176
D206	A7160570	DIODE, 1SS176

IC/TRANSISTORS (CD PLAYER)

Location No.	Part No.	Description
Q101	A6532940	TRANSISTOR, 2SA950-Y
Q102	22117698	IC, NJM2904D
Q351	22128072	IC, TMP42C70N-8131
Q701	B0377590	IC, TA8102P
Q702	B0377590	IC, TA8102P
Q703	B0377590	IC, TA8102P
Q704	B0377590	IC, TA8102P
Q705	B0377580	IC, TA8101N
Q706	22128063	IC, TMP47C420AF8624
Q707	B0325460	IC, TA7354P
Q708	22117709	IC, NJM3403ADC
Q709	B0412016	IC, TC9201AF-BS
Q710	B0412006	IC, TC9200AF-BS
Q711	22117936	IC, CXK5816M
Q712	B0272755	IC, TD6710AN
Q713	22117737	IC, NJM4560SD
Q714	A6317460	TRANSISTOR, 2SC1815NEW-GR
Q715	A6639320	TRANSISTOR, 2SB1015-Y
Q716	A6533240	TRANSISTOR, 2SA966-Y
Q718	A6317460	TRANSISTOR, 2SC1815NEW-GR
Q719	A6040910	TRANSISTOR, 2SJ103-GR
Q720	A6040910	TRANSISTOR, 2SJ103-GR
Q721	22117947	IC, PST520H
Q722	A6534060	TRANSISTOR, 2SA1015-GR
Q723	A6342210	TRANSISTOR, 2SC2878-B
Q724	A6342210	TRANSISTOR, 2SC2878-B
Q725	A6317460	TRANSISTOR, 2SC1815NEW-GR
Q726	A6317460	TRANSISTOR, 2SC1815NEW-GR
Q727	A6317460	TRANSISTOR, 2SC1815NEW-GR
Q728	A6534060	TRANSISTOR, 2SA1015-GR
Q729	A6342210	TRANSISTOR, 2SC2878-B
Q817	A6753140	TRANSISTOR, 2SC982TM

DIODES (CD PLAYER)

Location No.	Part No.	Description
D351	A7160570	DIODE, 1SS176
D352	A7160570	DIODE, 1SS176
D353	A7160570	DIODE, 1SS176
D354	A7160570	DIODE, 1SS176
D701	A7160570	DIODE, 1SS176
D702	A7160570	DIODE, 1SS176
D703	A7160570	DIODE, 1SS176
D704	A7160570	DIODE, 1SS176
D705	A7160570	DIODE, 1SS176
D706	A7160570	DIODE, 1SS176
D708	A7990200	DIODE, S5688B
D709	A7990200	DIODE, S5688B
D710	A7160570	DIODE, 1SS176
D711	A8603150	DIODE, TLR209, LED
D714	A7160570	DIODE, 1SS176
D715	A7160570	DIODE, 1SS176

IC/TRANSISTORS (DECK. AMP)

Location No.	Part No.	Description
Q11A	A6534060	TRANSISTOR, 2SA1015-GR
Q11B	A6534060	TRANSISTOR, 2SA1015-GR
Q301	B0350510	IC, TA75558S
Q302	A6317460	TRANSISTOR, 2SC1815NEW-GR
Q401	B0358475	IC, TA7796Z
Q402	B0358475	IC, TA7796Z
Q403	A6342210	TRANSISTOR, 2SC2878-B
Q404	A6342210	TRANSISTOR, 2SC2878-B
Q405	A6317460	TRANSISTOR, 2SC1815NEW-GR
Q406	A6317460	TRANSISTOR, 2SC1815NEW-GR
Q407	A6317460	TRANSISTOR, 2SC1815NEW-GR
Q501	B0320500	IC, TA7273P
Q551	A6317460	TRANSISTOR, 2SC1815NEW-GR
Q552	A6857700	TRANSISTOR, 2SD1140
Q553	A6317460	TRANSISTOR, 2SC1815NEW-GR
Q554	A6321240	TRANSISTOR, 2SC2120-Y
Q555	A6317460	TRANSISTOR, 2SC1815NEW-GR
Q556	A6317460	TRANSISTOR, 2SC1815NEW-GR
Q558	A6317460	TRANSISTOR, 2SC1815NEW-GR
Q559	A6317460	TRANSISTOR, 2SC1815NEW-GR
Q560	A6317460	TRANSISTOR, 2SC1815NEW-GR
Q561	A6317460	TRANSISTOR, 2SC1815NEW-GR
Q562	A6534060	TRANSISTOR, 2SA1015-GR
Q601	B0358350	IC, TA7784P
Q602	B0325080	IC, TA7325P
Q603	A6044620	TRANSISTOR, 2SK246-Y, FET
Q604	A6044620	TRANSISTOR, 2SK246-Y, FET
Q605	A6044620	TRANSISTOR, 2SK246-Y, FET
Q606	A6044620	TRANSISTOR, 2SK246-Y, FET
Q607	A6342210	TRANSISTOR, 2SC2878-B
Q608	A6342210	TRANSISTOR, 2SC2878-B
Q609	A6534060	TRANSISTOR, 2SA1015-GR
Q610	A6317460	TRANSISTOR, 2SC1815NEW-GR
Q611	A6321240	TRANSISTOR, 2SC2120-Y
Q612	A6321240	TRANSISTOR, 2SC2120-Y
Q613	A6317460	TRANSISTOR, 2SC1815NEW-GR
Q614	A6317460	TRANSISTOR, 2SC1815NEW-GR
Q615	A6321240	TRANSISTOR, 2SC2120-Y
Q616	A6321240	TRANSISTOR, 2SC2120-Y
Q617	A6321240	TRANSISTOR, 2SC2120-Y
Q901	A6868350	TRANSISTOR, 2SD1413
Q902	A6058710	TRANSISTOR, 2SK365-Y, FET
Q903	A6868020	TRANSISTOR, 2SD1406-Y
Q904	B0372960	IC, TA78L009AP
Q905	B0372560	IC, TA78L005AP

DIODES (DECK. AMP)

Location No.	Part No.	Description
D301	A7112250	05AZ4.7-Z, ZENER
D303	A7160570	DIODE, 1SS176
D304	A7160570	DIODE, 1SS176
D401	A7160570	DIODE, 1SS176
D402	A7160570	DIODE, 1SS176
D403	A7160570	DIODE, 1SS176
D504	A7160570	DIODE, 1SS176
D551	A7160570	DIODE, 1SS176
D552	A7160570	DIODE, 1SS176
D553	A7160570	DIODE, 1SS176
D554	A7160570	DIODE, 1SS176
D556	A7160570	DIODE, 1SS176
D557	A7160570	DIODE, 1SS176
D558	A7160570	DIODE, 1SS176
D559	A7160570	DIODE, 1SS176
D560	A7160570	DIODE, 1SS176
D561	A7160570	DIODE, 1SS176
D562	A7160570	DIODE, 1SS176
D601	A7160570	DIODE, 1SS176
D602	A7160570	DIODE, 1SS176
D603	A7160570	DIODE, 1SS176
D604	A7160570	DIODE, 1SS176
D605	A7160570	DIODE, 1SS176
D606	A7160570	DIODE, 1SS176
D607	A7160570	DIODE, 1SS176
D608	A7112070	DIODE, 05AZ3.9-X, ZENER
D609	A7160570	DIODE, 1SS176
⚠ D901	A7682021	DIODE, 1D2C1(T)
⚠ D902	A7682021	DIODE, 1D2C1(T)
D905	A7112400	DIODE, 05AZ5.6-Y, ZENER
D906	A7112890	DIODE, 05AZ10-Z, ZENER

PC BOARD - 1 (TUNER)

Location No.	Part No.	Description
A001	22243110	COIL, LOOP ANTENNA
J001	22162536	TERMINAL, 4P ANTENNA
L001	22294801	RF COIL FM
L002	22294800	COIL, OSCILLATOR FM
L101	22291330	CHOKE COIL, 2.2UH
L103	22291330	CHOKE COIL, 2.2UH
S001	22196736	PUSH SWITCH WITH S004
T001	22265888	IF TRANSFORMER, FM
T101	22264838	IF TRANSFORMER, AM
T102	22265886	IF TRANSFORMER, FM
T103	22264912	IF TRANSFORMER, AM
T104	22245388	COIL, OSCILLATOR MW

Location No.	Part No.	Description
T105	22245388	COIL, OSCILLATOR, LW
T106	22243125	COIL, MW ANTENNA
T107	22243124	COIL, LW ANTENNA
Z001	22153362	FILTER, RF, FM (EUROPE, UK, AUSTRALIA)
Z002	22153276	FILTER, BAND PASS (GERMANY)
Z101	22153083	FILTER, CERAMIC, 460B
Z102	22153299	FILTER, CERAMIC, 10.7MHZ, FM
Z103	22153299	FILTER, CERAMIC, 10.7MHZ, FM
Z104	22153193	FILTER, LOW PASS (GERMANY)

PC BOARD - 2 (CD PLAYER)

Location No.	Part No.	Description
L301	22291195	CHOKE COIL, 470UH
L701	22291195	CHOKE COIL, 470UH
N701	22113616	LAMP, 8V, 150MA
S101	22196598	LEAF SWITCH CLOSE,OPEN LIMIT
S102	22196817	LEAF SWITCH START LIMIT
S351	22196901	KEY SWITCH PLAY,PAUSE
S352	22196901	KEY SWITCH STOP,CLOSE
S353	22196901	KEY SWITCH MEMORY
S354	22196901	KEY SWITCH REPEAT
S355	22196901	KEY SWITCH DISPLAY
S356	22196901	KEY SWITCH FF
S357	22196901	KEY SWITCH REV
S358	22196901	KEY SWITCH UP
S359	22196901	KEY SWITCH DOWN
S360	22196901	KEY SWITCH OPEN,CLOSE
Z351	22153444	CERAMIC OSCILLATOR, 2MHZ
Z701	22153443	OSCILLATOR, CERAMIC, 4.19MHZ
Z702	22153382	OSCILLATOR, CRYSTAL, 16.9MHZ
Z703	22137783	FILTER, LC
Z704	22137783	FILTER, LC
Z705	22104680	LIQUID CRYSTAL DISPLAY LT5205M-40P51U
Z706	20540009	COMPOSITE PARTS, 5.6KX5
Z707	22540781	COMPOSITE PARTS, 5.6KX6
Z708	22540776	COMPOSITE PARTS, 5.6KX4

PC BOARD - 3 (DECK. AMP)

Location No.	Part No.	Description
⚠ EP01	22176286	POWER CORD EUROPE
⚠ EP01	22176588	POWER CORD AUSTRALIA
⚠ EP01	22176628	POWER CORD UK
EP02	22165047	HOLDER, FUSE
⚠ F901	22144408	FUSE, T500MA, 250V (EUROPE)
⚠ F901	22144511	FUSE, T500MA, 250V (UK) (UK,AUSTRALIA)
J301	22198282	JACK, US-4P
J401	22198173	JACK, 3.5MM MICROPHONE
J501	22198172	JACK, 3.5MM HEADPHONE
J502	22162546	SPEAKER TERMINAL, 4P
J901	22198212	JACK, 3.5MM PLAYER POWER
L501	22210152	CHOKE COIL, 4UH (GERMANY)
L502	22210152	CHOKE COIL, 4UH (GERMANY)
L601	22235257	COIL, OSCILLATOR
⚠ P901	22118223	IC PROTECTOR, ICP-F75-2.7A
S401	22196953	LEVER SWITCH FUNCTION
S402	22196935	PUSH SWITCH PHONO/AUX
S51A	22196641	LEAF SWITCH PLAY
S51B	22196641	LEAF SWITCH PLAY
S52A	22196064	LEAF SWITCH FF
S52B	22196064	LEAF SWITCH REW
S53B	22196323	LEAF SWITCH REC
S601	22196936	PUSH SWITCH SPEED SELECT
⚠ S901	22196751	PUSH SWITCH POWER
⚠ T901	22224931	POWER TRANSFORMER EUROPE
⚠ T901	22224932	POWER TRANSFORMER UK
⚠ T901	22224933	POWER TRANSFORMER AUSTRALIA
Z601	22153229	FILTER, BIAS TRAP, 85KHZ
Z602	22153229	FILTER, BIAS TRAP, 85KHZ

PC BOARD - 1 (TUNER)

Location No.	Part No.	Description
C001	20343102	CD, 1000PF, 50V, K
C002	20311409	CD, 4PF, 50V, D
C004	22308640	VARIABLE CAPACITOR A-H
C006	20341223	CD, 0.022MFD, 50V, Z
C007	20312150	CD, 15PF, 50V, J(CH)
C008	20313270	CD, 27PF, 50V, J(PH)
C011	20311509	CD, 5PF, 50V, D
C012	20341103	CD, 0.01MFD, 50V, Z
C013	20343221	CD, 220PF, 50V, K
C016	20341223	CD, 0.022MFD, 50V, Z
C03	20311270	CD, 27PF, 50V, J
C101	20341223	CD, 0.022MFD, 50V, Z
C102	20343102	CD, 1000PF, 50V, K
C103	20418109	EL, 1MFD, 50V
C104	20341223	CD, 0.022MFD, 50V, Z
C105	20341103	CD, 0.01MFD, 50V, Z
C106	20341103	CD, 0.01MFD, 50V, Z
C107	20341223	CD, 0.022MFD, 50V, Z
C108	20418478	EL, 0.47MFD, 50V
C109	20416470	EL, 47MFD, 25V
C110	20341223	CD, 0.022MFD, 50V, Z
C111	20341223	CD, 0.022MFD, 50V, Z
C112	20341223	CD, 0.022MFD, 50V, Z
C113	20341103	CD, 0.01MFD, 50V, Z
C114	20341103	CD, 0.01MFD, 50V, Z
C115	20341223	CD, 0.022MFD, 50V, Z
C116	20311709	CD, 7PF, 50V, D
C117	20381121	PP, 120PF, 100V, J
C117	20811121	PP, 120PF, 100V, J
C118	22309213	TRIMMER, 15PF
C123	20311209	CD, 2PF, 50V, D
C124	22309213	TRIMMER, 15PF
C125	20311180	CD, 18PF, 50V, J
C127	20418100	EL, 10MFD, 50V
C129	20341473	CD, 0.047MFD, 50V, Z
C131	20341223	CD, 0.022MFD, 50V, Z
C132	20311560	CD, 56PF, 50V, J
C133	20381331	PP, 330PF, 50V, K
C134	20381222	PP, 2200PF, 100V, J
C136	20341103	CD, 0.01MFD, 50V, Z
C201	20418108	EL, 0.1MFD, 50V
C202	20418108	EL, 0.1MFD, 50V
C203	20318273	BL, 0.027MFD, 25V, K
C204	20318273	BL, 0.027MFD, 25V, K
C205	20414101	EL, 100MFD, 10V
C206	20418109	EL, 1MFD, 50V
C207	20381102	PP, 1000PF, 100V, J
C208	20418339	EL, 3.3MFD, 50V
C209	20418109	EL, 1MFD, 50V
C210	20414101	EL, 100MFD, 10V
C211	20418109	EL, 1MFD, 50V
C251	20416470	EL, 47MFD, 25V
C252	20341223	CD, 0.022MFD, 50V, Z

PC BOARD - 2 (CD PLAYER)

Location No.	Part No.	Description
C101	20433101	EL, 100MFD, 6.3V
C102	22360715	BL, 0.022MFD, 16V, M
C103	20432470	EL, 47MFD, 4V
C104	20319333	BL, 0.033MFD, 25V, M
C105	20319103	BL, 0.01MFD, 25V, Z
C106	20319103	BL, 0.01MFD, 25V, Z
C107	20319103	BL, 0.01MFD, 25V, Z
C351	20343103	CD, 0.01MFD, 50V, K
C701	20319104	BL, 0.1MFD, 25V, M
C702	20319104	BL, 0.1MFD, 25V, M
C703	20319104	BL, 0.1MFD, 25V, M
C704	20319104	BL, 0.1MFD, 25V, M
C705	20319104	BL, 0.1MFD, 25V, M
C706	20319104	BL, 0.1MFD, 25V, M
C707	20319104	BL, 0.1MFD, 25V, M
C708	20319104	BL, 0.1MFD, 25V, M
C709	20414101	EL, 100MFD, 10V
C710	20414101	EL, 100MFD, 10V
C711	20414101	EL, 100MFD, 10V
C712	20414101	EL, 100MFD, 10V
C713	20343221	CD, 220PF, 50V, K
C714	20343101	CD, 100PF, 50V, K
C715	20343101	CD, 100PF, 50V, K
C716	20343102	CD, 1000PF, 50V, K
C717	20416470	EL, 47MFD, 25V
C718	20311220	CD, 22PF, 50V, J
C719	20371393	MY, 0.039MFD, 50V, J
C720	20418478	EL, 0.47MFD, 50V
C722	20311470	CD, 47PF, 50V, J
C723	20311470	CD, 47PF, 50V, J
C724	20343103	CD, 0.01MFD, 50V, K
C725	20343103	CD, 0.01MFD, 50V, K
C726	20311209	CD, 2PF, 50V, D
C727	20311100	CD, 10PF, 50V, D
C728	20343151	CD, 150PF, 50V, K
C729	20343151	CD, 150PF, 50V, K
C730	20319104	BL, 0.1MFD, 25V, M
C731	20414221	EL, 220MFD, 10V
C732	20319104	BL, 0.1MFD, 25V, M
C733	20414221	EL, 220MFD, 10V
C734	20416470	EL, 47MFD, 25V
C735	20414101	EL, 100MFD, 10V
C736	20343101	CD, 100PF, 50V, K
C737	20418220	EL, 22MFD, 50V
C738	20414471	EL, 470MFD, 10V
C739	20414221	EL, 220MFD, 10V
C740	20319104	BL, 0.1MFD, 25V, M
C741	20319104	BL, 0.1MFD, 25V, M
C742	20311470	CD, 47PF, 50V, J
C743	20311470	CD, 47PF, 50V, J
C744	20311470	CD, 47PF, 50V, J
C745	20311470	CD, 47PF, 50V, J
C747	20371333	MY, 0.033MFD, 50V, J

Location No.	Part No.	Description
C748	20418228	EL, 0.22MFD, 50V
C749	20418109	EL, 1MFD, 50V
C750	20371183	MY, 0.018MFD, 50V, J
C751	20371104	MY, 0.1MFD, 50V, J
C752	20371103	MY, 0.01MFD, 50V, J
C753	20458109	EL, 1MFD, 50V, NP
C754	20458109	EL, 1MFD, 50V, NP
C755	20456479	EL, 4.7MFD, 25V, NP
C756	20454220	EL, 22MFD, 10V, NP
C757	20414101	EL, 100MFD, 10V
C759	20311220	CD, 22PF, 50V, J
C760	20311220	CD, 22PF, 50V, J
C761	20414221	EL, 220MFD, 10V
C763	20414101	EL, 100MFD, 10V
C764	20416470	EL, 47MFD, 25V
C765	20418100	EL, 10MFD, 50V
C766	20418100	EL, 10MFD, 50V
C767	20381122	PP, 1200PF, 100V, J
C768	20381122	PP, 1200PF, 100V, J
C769	20343331	CD, 330PF, 50V, K
C770	20343331	CD, 330PF, 50V, K
C771	20418100	EL, 10MFD, 50V
C772	20418100	EL, 10MFD, 50V
C773	20343101	CD, 100PF, 50V, K
C774	20343101	CD, 100PF, 50V, K
C775	20343181	CD, 180PF, 50V, K
C776	20343181	CD, 180PF, 50V, K
C777	20371122	MY, 1200PF, 50V, J
C778	20371122	MY, 1200PF, 50V, J
C779	20343272	CD, 2700PF, 50V, K
C780	20343272	CD, 2700PF, 50V, K
C781	20418100	EL, 10MFD, 50V
C782	20418100	EL, 10MFD, 50V
C786	20414101	EL, 100MFD, 10V
C787	20414101	EL, 100MFD, 10V
C789	20418338	EL, 0.33MFD, 50V
C791	20381472	PP, 4700PF, 100V, M
C792	20381472	PP, 4700PF, 100V, M
C793	20414221	EL, 220MFD, 10V
C794	20343103	CD, 0.01MFD, 50V, K
C795	20343103	CD, 0.01MFD, 50V, K
C801	20418229	EL, 2.2MFD, 50V
C802	22370288	MY, 0.47MFD, 50V, J

PC BOARD - 3 (DECK. AMP)

Location No.	Part No.	Description
C301	20418109	EL, 1MFD, 50V
C302	20418109	EL, 1MFD, 50V
C304	20414101	EL, 100MFD, 10V
C305	20418109	EL, 1MFD, 50V
C306	20418109	EL, 1MFD, 50V
C307	20318222	BL, 2200PF, 25V, K
C308	20318222	BL, 2200PF, 25V, K
C309	20318822	BL, 8200PF, 25V, K
C310	20318822	BL, 8200PF, 25V, K
C311	20416470	EL, 47MFD, 25V
C312	20416470	EL, 47MFD, 25V
C313	20414471	EL, 470MFD, 10V
C314	20341223	CD, 0.022MFD, 50V, Z (GERMANY)
C315	20343331	CD, 330PF, 50V, K (GERMANY)
C316	20343331	CD, 330PF, 50V, K (GERMANY)
C317	20343471	CD, 470PF, 50V, K (GERMANY)
C318	20343471	CD, 470PF, 50V, K (GERMANY)
C319	20343331	CD, 330PF, 50V, K (GERMANY)
C320	20343331	CD, 330PF, 50V, K (GERMANY)
C321	20341223	CD, 0.022MFD, 50V, Z (GERMANY)
C331	20458109	EL, 1MFD, 50V, NP
C332	20418220	EL, 22MFD, 50V
C401	20418109	EL, 1MFD, 50V
C402	20418109	EL, 1MFD, 50V
C403	20418109	EL, 1MFD, 50V
C404	20418109	EL, 1MFD, 50V
C405	20414471	EL, 470MFD, 10V
C406	20418229	EL, 2.2MFD, 50V
C407	20341473	CD, 0.047MFD, 50V, Z
C417	20418229	EL, 2.2MFD, 50V
C418	20418229	EL, 2.2MFD, 50V
C419	20318333	BL, 0.033MFD, 25V, K
C420	20318333	BL, 0.033MFD, 25V, K
C421	20418338	EL, 0.33MFD, 50V
C422	20418338	EL, 0.33MFD, 50V
C423	20318123	BL, 0.012MFD, 25V, K
C424	20318123	BL, 0.012MFD, 25V, K
C425	20418108	EL, 0.1MFD, 50V
C426	20418108	EL, 0.1MFD, 50V
C427	20318272	BL, 2700PF, 25V, K
C428	20318272	BL, 2700PF, 25V, K
C429	20318273	BL, 0.027MFD, 25V, K
C430	20318273	BL, 0.027MFD, 25V, K
C431	20343681	CD, 680PF, 50V, K
C432	20343681	CD, 680PF, 50V, K
C433	20318822	BL, 8200PF, 25V, K
C434	20318822	BL, 8200PF, 25V, K
C435	20343271	CD, 270PF, 50V, K
C436	20343271	CD, 270PF, 50V, K
C437	20343271	CD, 270PF, 50V, K
C438	20343271	CD, 270PF, 50V, K
C439	20417330	EL, 33MFD, 35V
C440	20417330	EL, 33MFD, 35V

Location No.	Part No.	Description
C441	20418109	EL, 1MFD, 50V
C442	20418109	EL, 1MFD, 50V
C444	20414221	EL, 220MFD, 10V
C447	20343102	CD, 1000PF, 50V, K
C449	20418109	EL, 1MFD, 50V
C450	20418109	EL, 1MFD, 50V
C451	20418229	EL, 2.2MFD, 50V
C452	20418229	EL, 2.2MFD, 50V
C456	20414221	EL, 220MFD, 10V
C457	20343681	CD, 680PF, 50V, K
C458	20343681	CD, 680PF, 50V, K
C501	20418109	EL, 1MFD, 50V
C502	20418109	EL, 1MFD, 50V
C503	20414221	EL, 220MFD, 10V
C504	20414221	EL, 220MFD, 10V
C505	20417471	EL, 470MFD, 35V
C506	20417471	EL, 470MFD, 35V
C507	20371104	MY, 0.1MFD, 50V, J
C508	20371104	MY, 0.1MFD, 50V, J
C509	20416470	EL, 47MFD, 25V
C511	20343471	CD, 470PF, 50V, K (GERMANY)
C512	20343471	CD, 470PF, 50V, K (GERMANY)
C515	20343102	CD, 1000PF, 50V, K (GERMANY)
C516	20343102	CD, 1000PF, 50V, K (GERMANY)
C517	20343472	CD, 4700PF, 50V, K (GERMANY)
C518	20343472	CD, 4700PF, 50V, K (GERMANY)
C523	20418338	EL, 0.33MFD, 50V
C601	20343561	CD, 560PF, 50V, K
C602	20343561	CD, 560PF, 50V, K
C603	20343561	CD, 560PF, 50V, K
C604	20343561	CD, 560PF, 50V, K
C605	20318103	BL, 0.01MFD, 25V, K
C606	20318103	BL, 0.01MFD, 25V, K
C607	20418109	EL, 1MFD, 50V
C608	20418109	EL, 1MFD, 50V
C609	20418100	EL, 10MFD, 50V
C610	20418479	EL, 4.7MFD, 50V
C611	20414101	EL, 100MFD, 10V
C612	20418478	EL, 0.47MFD, 50V
C613	20414101	EL, 100MFD, 10V
C614	20414101	EL, 100MFD, 10V
C615	20312120	CD, 12PF, 50V, J(CH)
C616	20312120	CD, 12PF, 50V, J(CH)
C617	20343152	CD, 1500PF, 50V, K
C618	20343152	CD, 1500PF, 50V, K
C619	20343472	CD, 4700PF, 50V, K
C620	20343472	CD, 4700PF, 50V, K
C621	20418100	EL, 10MFD, 50V
C622	20418100	EL, 10MFD, 50V
C623	20343271	CD, 270PF, 50V, K
C624	20343271	CD, 270PF, 50V, K
C625	20418338	EL, 0.33MFD, 50V
C626	20418338	EL, 0.33MFD, 50V
C627	20343472	CD, 4700PF, 50V, K
C628	20343472	CD, 4700PF, 50V, K
C629	20418109	EL, 1MFD, 50V
C630	20418109	EL, 1MFD, 50V
C631	20343151	CD, 150PF, 50V, K
C632	20343151	CD, 150PF, 50V, K
C633	20343472	CD, 4700PF, 50V, K
C634	20343472	CD, 4700PF, 50V, K
C635	20418479	EL, 4.7MFD, 50V
C636	20418479	EL, 4.7MFD, 50V
C637	20418479	EL, 4.7MFD, 50V
C638	20414101	EL, 100MFD, 10V
C639	20418479	EL, 4.7MFD, 50V
C640	20418108	EL, 0.1MFD, 50V
C641	20343102	CD, 1000PF, 50V, K
C642	20343102	CD, 1000PF, 50V, K
C644	20381122	PP, 1200PF, 100V, J
C645	20381153	PP, 0.015MFD, 100V, J
C646	20341473	CD, 0.047MFD, 50V, Z
C647	20414101	EL, 100MFD, 10V
C648	20319103	BL, 0.01MFD, 25V, Z
C649	20418108	EL, 0.1MFD, 50V
C650	20414101	EL, 100MFD, 10V
C651	20343102	CD, 1000PF, 50V, K (GERMANY)
C652	20343102	CD, 1000PF, 50V, K (GERMANY)
C653	20343102	CD, 1000PF, 50V, K (GERMANY)
C654	20343102	CD, 1000PF, 50V, K (GERMANY)
C655	20343102	CD, 1000PF, 50V, K (GERMANY)
C656	20343102	CD, 1000PF, 50V, K (GERMANY)
C657	20343103	CD, 0.01MFD, 50V, K
C658	20343222	CD, 2200PF, 50V, K
C659	20343103	CD, 0.01MFD, 50V, K
C673	20341473	CD, 0.047MFD, 50V, Z
⚠ C901	22340229	CD, 4700PF, 400V, M
C902	20416222	EL, 2200MFD, 25V
C903	22440629	EL, 4700MFD, 35V
C904	20341223	CD, 0.022MFD, 50V, Z
C905	20341223	CD, 0.022MFD, 50V, Z
C906	20341223	CD, 0.022MFD, 50V, Z
C907	20341223	CD, 0.022MFD, 50V, Z
C909	20418109	EL, 1MFD, 50V
C910	20414101	EL, 100MFD, 10V
C911	20414101	EL, 100MFD, 10V

Location No.	Part No.	Description
C912	20414101	EL, 100MFD, 10V
C913	20414101	EL, 100MFD, 10V
C916	20418109	EL, 1MFD, 50V

PC BOARD - 1 (TUNER)

R001	20512220	CF, 22 OHM, 1/6W, J
R002	20512101	CF, 100 OHM, 1/6W, J
R003	20512104	CF, 100K OHM, 1/6W, J
R004	20512221	CF, 220 OHM, 1/6W, J
R005	20512221	CF, 220 OHM, 1/6W, J
R006	20512101	CF, 100 OHM, 1/6W, J
R101	20512333	CF, 33K OHM, 1/6W, J
R102	20512561	CF, 560 OHM, 1/6W, J
R103	20512104	CF, 100K OHM, 1/6W, J
R104	20512331	CF, 330 OHM, 1/6W, J
R105	20512331	CF, 330 OHM, 1/6W, J
R106	20512182	CF, 1.8K OHM, 1/6W, J
R108	20512101	CF, 100 OHM, 1/6W, J
R109	20512681	CF, 680 OHM, 1/6W, J
R110	20512470	CF, 47 OHM, 1/6W, J
R111	20512101	CF, 100 OHM, 1/6W, J
R112	20512472	CF, 4.7K OHM, 1/6W, J
R113	20512223	CF, 22K OHM, 1/6W, J
R114	20512223	CF, 22K OHM, 1/6W, J
R115	20512101	CF, 100 OHM, 1/6W, J
R117	20512103	CF, 10K OHM, 1/6W, J
R118	20512102	CF, 1K OHM, 1/6W, J
R201	20512472	CF, 4.7K OHM, 1/6W, J
R202	20512472	CF, 4.7K OHM, 1/6W, J
R203	20512104	CF, 100K OHM, 1/6W, J
R204	20512104	CF, 100K OHM, 1/6W, J
R205	20512222	CF, 2.2K OHM, 1/6W, J
R206	20512222	CF, 2.2K OHM, 1/6W, J
R207	20512102	CF, 1K OHM, 1/6W, J
R208	20512154	CF, 150K OHM, 1/6W, J
R209	20512682	CF, 6.8K OHM, 1/6W, J
R210	22658761	VARIABLE, SEMI FIXED, 10K-B
R211	20512102	CF, 1K OHM, 1/6W, J
R212	20512102	CF, 1K OHM, 1/6W, J
R216	20512561	CF, 560 OHM, 1/6W, J
R217	20512183	CF, 18K OHM, 1/6W, J
R218	20512104	CF, 100K OHM, 1/6W, J
R219	20512222	CF, 2.2K OHM, 1/6W, J
R220	20512222	CF, 2.2K OHM, 1/6W, J
R251	20512331	CF, 330 OHM, 1/6W, J
R252	20512102	CF, 1K OHM, 1/6W, J
R253	20512223	CF, 22K OHM, 1/6W, J
R254	20512103	CF, 10K OHM, 1/6W, J

PC BOARD - 2 (CD PLAYER)

R101	20512103	CF, 10K OHM, 1/6W, J
R102	20512821	CF, 820 OHM, 1/6W, J
R103	22570738	MF, 18K OHM, 1/6W, J
R104	22570727	MF, 2.2K OHM, 1/6W, F
R105	20512105	CF, 1M OHM, 1/6W, J
R106	20512102	CF, 1K OHM, 1/6W, J
R107	20512472	CF, 4.7K OHM, 1/6W, J
R108	20512100	CF, 10 OHM, 1/6W, J
R109	20512104	CF, 100K OHM, 1/6W, J
R110	20512102	CF, 1K OHM, 1/6W, J
R111	20512103	CF, 10K OHM, 1/6W, J
R351	20512104	CF, 100K OHM, 1/6W, J
R352	20512104	CF, 100K OHM, 1/6W, J
R353	20512104	CF, 100K OHM, 1/6W, J
R354	20512104	CF, 100K OHM, 1/6W, J
R355	20512562	CF, 5.6K OHM, 1/6W, J
R356	20512562	CF, 5.6K OHM, 1/6W, J
R357	20512562	CF, 5.6K OHM, 1/6W, J
R358	20512562	CF, 5.6K OHM, 1/6W, J
R359	20512562	CF, 5.6K OHM, 1/6W, J
R360	20512472	CF, 4.7K OHM, 1/6W, J
R361	20512222	CF, 2.2K OHM, 1/6W, J
R362	20512562	CF, 5.6K OHM, 1/6W, J
R709	20512103	CF, 10K OHM, 1/6W, J
R710	20514268	
R711	20512392	CF, 3.9K OHM, 1/6W, J
R712	22658901	VARIABLE, SEMI FIXED, 20K
R713	20512563	CF, 56K OHM, 1/6W, J
R714	20512682	CF, 6.8K OHM, 1/6W, J
R715	20512103	CF, 10K OHM, 1/6W, J
R716	22658884	VARIABLE, SEMI FIXED, 100K
R717	20512225	CF, 2.2M OHM, 1/6W, J
R718	22658884	VARIABLE, SEMI FIXED, 100K
R719	20512392	CF, 3.9K OHM, 1/6W, J
R720	20512153	CF, 15K OHM, 1/6W, J
R721	20512822	CF, 8.2K OHM, 1/6W, J
R723	20512183	CF, 18K OHM, 1/6W, J
R724	20512681	CF, 680 OHM, 1/6W, J
R725	20512154	CF, 150K OHM, 1/6W, J
R726	20512223	CF, 22K OHM, 1/6W, J
R727	20512123	CF, 12K OHM, 1/6W, J
R728	20512123	CF, 12K OHM, 1/6W, J
R729	20512824	CF, 820K OHM, 1/6W, J
R730	20512822	CF, 8.2K OHM, 1/6W, J
R731	20512822	CF, 8.2K OHM, 1/6W, J
R732	20512151	CF, 150 OHM, 1/6W, J
R733	20512102	CF, 1K OHM, 1/6W, J
R735	20512223	CF, 22K OHM, 1/6W, J
R736	20512183	CF, 18K OHM, 1/6W, J
R737	20512683	CF, 68K OHM, 1/6W, J
R738	20512683	CF, 68K OHM, 1/6W, J

Location No.	Part No.	Description
R739	22658884	VARIABLE, SEMI FIXED, 100K
R740	20512124	CF, 120K OHM, 1/6W, J
R741	20512682	CF, 6.8K OHM, 1/6W, J
R742	20516339	CF, 3.9 OHM, 1/2W, J
R743	20512471	CF, 470 OHM, 1/6W, J
R744	20512471	CF, 470 OHM, 1/6W, J
R745	20512153	CF, 15K OHM, 1/6W, J
R747	20512562	CF, 5.6K OHM, 1/6W, J
R748	20512103	CF, 10K OHM, 1/6W, J
R751	20512562	CF, 5.6K OHM, 1/6W, J
R752	20512562	CF, 5.6K OHM, 1/6W, J
R753	20512472	CF, 4.7K OHM, 1/6W, J
R754	20512472	CF, 4.7K OHM, 1/6W, J
R755	20512223	CF, 22K OHM, 1/6W, J
R758	20512473	CF, 47K OHM, 1/6W, J
R759	20512104	CF, 100K OHM, 1/6W, J
R760	20512104	CF, 100K OHM, 1/6W, J
R761	20512104	CF, 100K OHM, 1/6W, J
R762	20512562	CF, 5.6K OHM, 1/6W, J
R763	20512334	CF, 330K OHM, 1/6W, J
R764	20512104	CF, 100K OHM, 1/6W, J
R765	20512562	CF, 5.6K OHM, 1/6W, J
R766	20512562	CF, 5.6K OHM, 1/6W, J
R767	20512562	CF, 5.6K OHM, 1/6W, J
R768	20512473	CF, 47K OHM, 1/6W, J
R769	20512103	CF, 10K OHM, 1/6W, J
R770	20512332	CF, 3.3K OHM, 1/6W, J
R771	20512473	CF, 47K OHM, 1/6W, J
R772	20512124	CF, 120K OHM, 1/6W, J
R773	20512103	CF, 10K OHM, 1/6W, J
R774	20512471	CF, 470 OHM, 1/6W, J
R775	20512822	CF, 8.2K OHM, 1/6W, J
⚠ R776	22500274	FUSIBLE, 4.7 OHM, 1/4W, J
R777	20512105	CF, 1M OHM, 1/6W, J
R778	20512223	CF, 22K OHM, 1/6W, J
R779	20512103	CF, 10K OHM, 1/6W, J
R780	20512103	CF, 10K OHM, 1/6W, J
R781	20512223	CF, 22K OHM, 1/6W, J
R782	20512473	CF, 47K OHM, 1/6W, J
R784	20512182	CF, 1.8K OHM, 1/6W, J
R785	20512682	CF, 6.8K OHM, 1/6W, J
R786	20512682	CF, 6.8K OHM, 1/6W, J
R787	20512332	CF, 3.3K OHM, 1/6W, J
R788	20512103	CF, 10K OHM, 1/6W, J
R789	20512472	CF, 4.7K OHM, 1/6W, J
R790	20512475	CF, 4.7M OHM, 1/6W, J
R791	20512182	CF, 1.8K OHM, 1/6W, J
R792	20512333	CF, 33K OHM, 1/6W, J
R793	20512154	CF, 150K OHM, 1/6W, J
R794	20512153	CF, 15K OHM, 1/6W, J
R795	20512823	CF, 82K OHM, 1/6W, J
R796	20512224	CF, 220K OHM, 1/6W, J
R797	20512104	CF, 100K OHM, 1/6W, J
R798	20512683	CF, 68K OHM, 1/6W, J

Location No.	Part No.	Description
R799	20520013	MF, 68K OHM, 1/4W, F
R800	20520013	MF, 68K OHM, 1/4W, F
R801	22570839	MF, 47K OHM, 1/4W, F
R802	22570839	MF, 47K OHM, 1/4W, F
R803	22570839	MF, 47K OHM, 1/4W, F
R804	20512272	CF, 2.7K OHM, 1/6W, J
R805	20512103	CF, 10K OHM, 1/6W, J
R806	20512151	CF, 150 OHM, 1/6W, J
R807	20512122	CF, 1.2K OHM, 1/6W, J
R808	20512104	CF, 100K OHM, 1/6W, J
R809	20512272	CF, 2.7K OHM, 1/6W, J
R810	20512272	CF, 2.7K OHM, 1/6W, J
R813	20512822	CF, 8.2K OHM, 1/6W, J
R814	20512822	CF, 8.2K OHM, 1/6W, J
R815	20512122	CF, 1.2K OHM, 1/6W, J
R816	20512122	CF, 1.2K OHM, 1/6W, J
R817	20512223	CF, 22K OHM, 1/6W, J
R818	20512223	CF, 22K OHM, 1/6W, J
R819	20512475	CF, 4.7M OHM, 1/6W, J
R820	20512475	CF, 4.7M OHM, 1/6W, J
R821	20512471	CF, 470 OHM, 1/6W, J
R822	20512471	CF, 470 OHM, 1/6W, J
R825	20512102	CF, 1K OHM, 1/6W, J
R826	20512102	CF, 1K OHM, 1/6W, J
R827	20512103	CF, 10K OHM, 1/6W, J
R828	20512103	CF, 10K OHM, 1/6W, J
R829	20512473	CF, 47K OHM, 1/6W, J
R831	20512683	CF, 68K OHM, 1/6W, J
R833	20512223	CF, 22K OHM, 1/6W, J
R834	20512122	CF, 1.2K OHM, 1/6W, J
R836	20512564	CF, 560K OHM, 1/6W, J
R840	20516689	CF, 6.8 OHM, 1/2W, J
R841	20512681	CF, 680 OHM, 1/6W, J
R842	20513333	CF, 33K OHM, 1/4W, J
R843	20512473	CF, 47K OHM, 1/6W, J

PC BOARD - 3 (DECK. AMP)

R14A	22658757	VARIABLE, SEMI FIXED, 1K-B
R14B	22658757	VARIABLE, SEMI FIXED, 1K-B
R16A	22658760	VARIABLE, SEMI FIXED, 5K-B
R16B	22658760	VARIABLE, SEMI FIXED, 5K-B
R301	20512102	CF, 1K OHM, 1/6W, J
R302	20512102	CF, 1K OHM, 1/6W, J
R303	20512104	CF, 100K OHM, 1/6W, J
R304	20512104	CF, 100K OHM, 1/6W, J
R305	20512104	CF, 100K OHM, 1/6W, J
R306	20512104	CF, 100K OHM, 1/6W, J
R307	20512103	CF, 10K OHM, 1/6W, J
R308	20512103	CF, 10K OHM, 1/6W, J
R309	20512394	CF, 390K OHM, 1/6W, J
R310	20512394	CF, 390K OHM, 1/6W, J
R311	20512333	CF, 33K OHM, 1/6W, J

Location No.	Part No.	Description
R312	20512333	CF, 33K OHM, 1/6W, J
R313	20512272	CF, 2.7K OHM, 1/6W, J
R314	20512272	CF, 2.7K OHM, 1/6W, J
R315	20512221	CF, 220 OHM, 1/6W, J
R316	20512332	CF, 3.3K OHM, 1/6W, J
R317	20512103	CF, 10K OHM, 1/6W, J
R318	20512103	CF, 10K OHM, 1/6W, J
R319	20512222	CF, 2.2K OHM, 1/6W, J
R320	20512222	CF, 2.2K OHM, 1/6W, J
R321	20512472	CF, 4.7K OHM, 1/6W, J
R322	20512472	CF, 4.7K OHM, 1/6W, J
R326	20512102	CF, 1K OHM, 1/6W, J
R327	20512333	CF, 33K OHM, 1/6W, J
R333	20512471	CF, 470 OHM, 1/6W, J
R334	20512273	CF, 27K OHM, 1/6W, J
R401	20512472	CF, 4.7K OHM, 1/6W, J
R402	20512472	CF, 4.7K OHM, 1/6W, J
R403	20512224	CF, 220K OHM, 1/6W, J
R404	20512224	CF, 220K OHM, 1/6W, J
R405	20512103	CF, 10K OHM, 1/6W, J
R406	20512473	CF, 47K OHM, 1/6W, J
R407	20512474	CF, 470K OHM, 1/6W, J
R408	20512474	CF, 470K OHM, 1/6W, J
R409	20512332	CF, 3.3K OHM, 1/6W, J
R410	20512332	CF, 3.3K OHM, 1/6W, J
R411	20512224	CF, 220K OHM, 1/6W, J
R412	20512224	CF, 220K OHM, 1/6W, J
R413	20512122	CF, 1.2K OHM, 1/6W, J
R414	20512122	CF, 1.2K OHM, 1/6W, J
R415	20512221	CF, 220 OHM, 1/6W, J
R416	20512104	CF, 100K OHM, 1/6W, J
R417	20512222	CF, 2.2K OHM, 1/6W, J
R421	20512472	CF, 4.7K OHM, 1/6W, J
R422	20512472	CF, 4.7K OHM, 1/6W, J
R423	22657470	VARIABLE, 100K OHM
R424	22657470	VARIABLE, 100K OHM
R425	22657470	VARIABLE, 100K OHM
R426	22657470	VARIABLE, 100K OHM
R427	22657470	VARIABLE, 100K OHM
R428	22657459	VARIABLE, 100K OHM
R429	20512222	CF, 2.2K OHM, 1/6W, J
R430	20512222	CF, 2.2K OHM, 1/6W, J
R431	20512221	CF, 220 OHM, 1/6W, J
R432	22657472	VARIABLE, 250K OHM
R437	20512474	CF, 470K OHM, 1/6W, J
R438	20512394	CF, 390K OHM, 1/6W, J
R439	20512222	CF, 2.2K OHM, 1/6W, J
R441	20512103	CF, 10K OHM, 1/6W, J
R442	20512103	CF, 10K OHM, 1/6W, J
R443	20512103	CF, 10K OHM, 1/6W, J
R444	20512102	CF, 1K OHM, 1/6W, J
R445	20512221	CF, 220 OHM, 1/6W, J
R447	20512222	CF, 2.2K OHM, 1/6W, J
R448	20512222	CF, 2.2K OHM, 1/6W, J
R449	20512222	CF, 2.2K OHM, 1/6W, J
R501	20512121	CF, 120 OHM, 1/6W, J
R502	20512121	CF, 120 OHM, 1/6W, J
R503	20516229	CF, 2.2 OHM, 1/2W, J
R504	20516229	CF, 2.2 OHM, 1/2W, J
R505	20512222	CF, 2.2K OHM, 1/6W, J
R506	20512222	CF, 2.2K OHM, 1/6W, J
R517	20516331	CF, 330 OHM, 1/2W, J
R518	20516331	CF, 330 OHM, 1/2W, J
R520	20512334	CF, 330K OHM, 1/6W, J
R551	20512222	CF, 2.2K OHM, 1/6W, J
R552	20512272	CF, 2.7K OHM, 1/6W, J
R553	20512333	CF, 33K OHM, 1/6W, J
R554	20512563	CF, 56K OHM, 1/6W, J
R555	20512104	CF, 100K OHM, 1/6W, J
R556	20512333	CF, 33K OHM, 1/6W, J
R557	20512104	CF, 100K OHM, 1/6W, J
R558	20512333	CF, 33K OHM, 1/6W, J
R559	20512333	CF, 33K OHM, 1/6W, J
R560	20512222	CF, 2.2K OHM, 1/6W, J
R561	20512104	CF, 100K OHM, 1/6W, J
R562	20512222	CF, 2.2K OHM, 1/6W, J
R563	20512222	CF, 2.2K OHM, 1/6W, J
R567	20512104	CF, 100K OHM, 1/6W, J
R568	20512104	CF, 100K OHM, 1/6W, J
R569	20512223	CF, 22K OHM, 1/6W, J
R570	20512104	CF, 100K OHM, 1/6W, J
R571	20512333	CF, 33K OHM, 1/6W, J
R572	20512333	CF, 33K OHM, 1/6W, J
R573	20512333	CF, 33K OHM, 1/6W, J
R574	20512102	CF, 1K OHM, 1/6W, J
R575	20512104	CF, 100K OHM, 1/6W, J
R601	20512102	CF, 1K OHM, 1/6W, J
R602	20512102	CF, 1K OHM, 1/6W, J
R603	20512102	CF, 1K OHM, 1/6W, J
R604	20512102	CF, 1K OHM, 1/6W, J
R605	20512684	CF, 680K OHM, 1/6W, J
R606	20512684	CF, 680K OHM, 1/6W, J
R607	20512820	CF, 82 OHM, 1/6W, J
R608	20512820	CF, 82 OHM, 1/6W, J
R609	20512334	CF, 330K OHM, 1/6W, J
R610	20512334	CF, 330K OHM, 1/6W, J
R611	20512822	CF, 8.2K OHM, 1/6W, J
R612	20512822	CF, 8.2K OHM, 1/6W, J
R613	20512153	CF, 15K OHM, 1/6W, J
R614	20512153	CF, 15K OHM, 1/6W, J
R615	20512332	CF, 3.3K OHM, 1/6W, J
R616	20512332	CF, 3.3K OHM, 1/6W, J
R617	20512104	CF, 100K OHM, 1/6W, J
R618	20512104	CF, 100K OHM, 1/6W, J
R619	20512221	CF, 220 OHM, 1/6W, J
R620	20512683	CF, 68K OHM, 1/6W, J
R621	20512333	CF, 33K OHM, 1/6W, J
R622	20512333	CF, 33K OHM, 1/6W, J

Location No.	Part No.	Description
R623	20512104	CF, 100K OHM, 1/6W, J
R624	20512394	CF, 390K OHM, 1/6W, J
R625	20512474	CF, 470K OHM, 1/6W, J
R626	20512222	CF, 2.2K OHM, 1/6W, J
R627	20512225	CF, 2.2M OHM, 1/6W, J
R628	20512225	CF, 2.2M OHM, 1/6W, J
R629	20512225	CF, 2.2M OHM, 1/6W, J
R630	20512225	CF, 2.2M OHM, 1/6W, J
R631	20512225	CF, 2.2M OHM, 1/6W, J
R632	20512225	CF, 2.2M OHM, 1/6W, J
R633	20512223	CF, 22K OHM, 1/6W, J
R634	20512223	CF, 22K OHM, 1/6W, J
R635	20512334	CF, 330K OHM, 1/6W, J
R636	20512334	CF, 330K OHM, 1/6W, J
R637	20512471	CF, 470 OHM, 1/6W, J
R638	20512471	CF, 470 OHM, 1/6W, J
R639	20512223	CF, 22K OHM, 1/6W, J
R640	20512223	CF, 22K OHM, 1/6W, J
R641	20512274	CF, 270K OHM, 1/6W, J
R642	20512274	CF, 270K OHM, 1/6W, J
R643	20512331	CF, 330 OHM, 1/6W, J
R644	20512331	CF, 330 OHM, 1/6W, J
R645	20512103	CF, 10K OHM, 1/6W, J
R646	20512103	CF, 10K OHM, 1/6W, J
R647	20512221	CF, 220 OHM, 1/6W, J
R648	20512334	CF, 330K OHM, 1/6W, J
R649	20512474	CF, 470K OHM, 1/6W, J
R650	20512333	CF, 33K OHM, 1/6W, J
R651	20512474	CF, 470K OHM, 1/6W, J
R652	20512334	CF, 330K OHM, 1/6W, J
R653	20512103	CF, 10K OHM, 1/6W, J
R654	20512103	CF, 10K OHM, 1/6W, J
R655	20512562	CF, 5.6K OHM, 1/6W, J
R656	20512562	CF, 5.6K OHM, 1/6W, J
R657	20512103	CF, 10K OHM, 1/6W, J
R658	20512103	CF, 10K OHM, 1/6W, J
R659	20512101	CF, 100 OHM, 1/6W, J
R660	20512101	CF, 100 OHM, 1/6W, J
R661	20512102	CF, 1K OHM, 1/6W, J
R662	20512102	CF, 1K OHM, 1/6W, J
R663	20512821	CF, 820 OHM, 1/6W, J
R664	20512821	CF, 820 OHM, 1/6W, J
R665	20512472	CF, 4.7K OHM, 1/6W, J
R668	20512103	CF, 10K OHM, 1/6W, J
R669	20512473	CF, 47K OHM, 1/6W, J
R670	20512183	CF, 18K OHM, 1/6W, J
R671	20512333	CF, 33K OHM, 1/6W, J
R672	20516151	CF, 150 OHM, 1/2W, J
R673	20512102	CF, 1K OHM, 1/6W, J
R674	20512102	CF, 1K OHM, 1/6W, J
R675	20512104	CF, 100K OHM, 1/6W, J
R676	20512472	CF, 4.7K OHM, 1/6W, J
R677	20516159	CF, 1.5 OHM, 1/2W, J
R678	20512220	CF, 22 OHM, 1/6W, J

Location No.	Part No.	Description
R679	20512223	CF, 22K OHM, 1/6W, J
R680	20512103	CF, 10K OHM, 1/6W, J
R681	20512332	CF, 3.3K OHM, 1/6W, J
R685	20512273	CF, 27K OHM, 1/6W, J
R686	20512273	CF, 27K OHM, 1/6W, J
R687	20512473	CF, 47K OHM, 1/6W, J
R688	20512473	CF, 47K OHM, 1/6W, J
⚠ R905	20531229	FUSIBLE, 2.2 OHM, 1/4W, J
⚠ R907	20531229	FUSIBLE, 2.2 OHM, 1/4W, J
R908	20512391	CF, 390 OHM, 1/6W, J
R909	20512470	CF, 47 OHM, 1/6W, J
⚠ R910	20532109	FUSIBLE, 1 OHM, 1/2W, J EUROPE,AUSTRALIA
⚠ R910	20532229	FUSIBLE, 2.2 OHM, 1/2W, J UK
R911	20512680	CF, 68 OHM, 1/6W, J
⚠ R914	20532220	FUSIBLE, 22 OHM, 1/2W, J
⚠ R915	20531229	FUSIBLE, 2.2 OHM, 1/4W, J

ACCESSORIES

AC01	22908326	OWNER'S MANUAL EUROPE
AC01	22908327	OWNER'S MANUAL UK/AUSTRALIA
AC01	22908330	OWNER'S MANUAL GERMANY
AC02	22124806	CORD, ANTENNA
AC03	20842204	TURNTABLE STAND