SHARP SERVICE INFORMATION

IMPORTANT NOTICE:

PLEASE DO NOT DESTROY THIS BROCHURE:
IT CONTAINS INFORMATION FOR YOUR SERVICE TECHNICIAN SHOULD YOUR SET REQUIRE SERVICE.

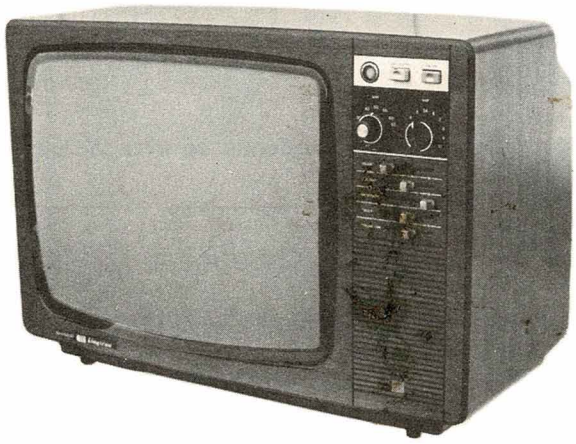

COLOUR TELEVISION

Linytron

MODEL

C-206X

ELECTRICAL SPECIFICATIONS

AERIAL INPUT IMPEDANCE	UHF 300 ohm VHF 300 or 75 ohm
CONVERGENCE	Self Converging System
FOCUS	Bi-potential electrostatic
AUDIO POWER OUTPUT RATING	2.0 Watt (max.)
INTERMEDIATE FREQUENCIES	
Picture IF Carrier Frequency	36.875 MHz
Sound IF Carrier Frequency	31.375 MHz
Colour Sub-Carrier Frequency	32.445 MHz
PICTURE TUBE SIZE	48 cm
POWER INPUT	240 volts AC 50 Hz
POWER RATING	155 Watt
SPEAKER SIZE	10 cm Dynamic
VOICE COIL IMPEDANCE	8 ohms (at 400 Hz)
SWEEP DEFLECTION	Magnetic
TUNING RANGES	All Aust. UHF, VHF Channels

The manufacturers reserve the right to vary specifications or use alternative materials as may be deemed necessary or desirable at any time, any such change or variation being of a kind as not to reduce the quality performance or appearance substantially.

SHARP CORPORATION OF AUSTRALIA PTY. LTD.

64-80 SEVILLE ST.,
FAIRFIELD, 2165
NEW SOUTH WALES TEL: 02-728-9111

SERVICE PRECAUTION.

1. Service
   Maintenance and repair of this receiver should be done by qualified service personal only.
2. Picture Tube
   Do not handle picture tube by the neck.
   Wear protective goggles and keep persons without protections away from the area.
   Before removing the picture tube from the cabinet, do not forget to discharge the picture tube (anode to ground).
3. X-Ray
   a. Do not adjust high voltage level above 28KV at 0 beam, by changing the circuit.
   b. Do not substitute a picture tube with unauthorized type and/or brands which may cause excess X-Ray radiation.

WARNING

This chassis is connected directly to one side of the 240volt AC line. Use an isolation transformer between the line cord plug and power receptacle, when servicing this chassis.

CHASSIS REMOVAL

1. Remove 2 aerial terminal retaining screws.
2. Remove 3 retaining screws and take the back off the front cabinet. (refer to fig. 1)
3. Loosen 2 retaining nuts and drop back the chassis. (refer to fig. 2)
4. In this position the chassis can be inspected from all sides. (refer to Fig. 3)
5. After all plug connections have been disconnected, the chassis can be pulled out of the brackets completely.

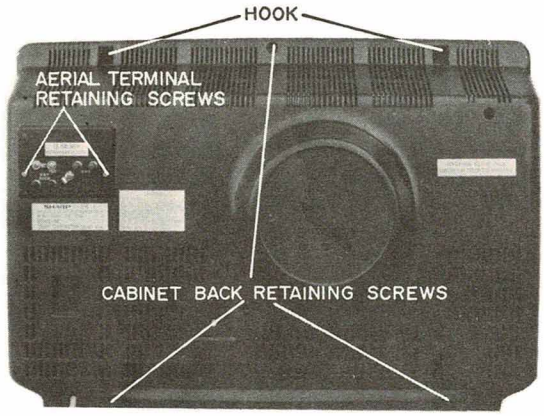

Figure 1

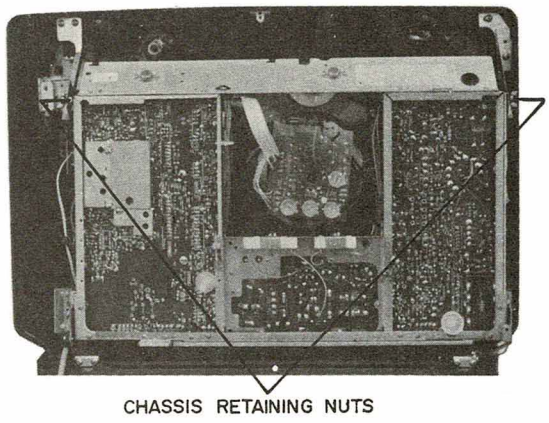

Figure 2

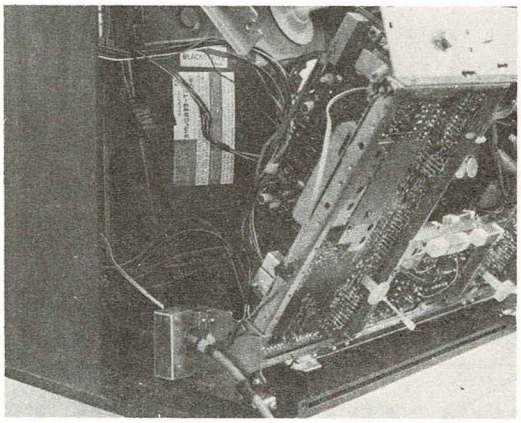

Figure 3

PRINTED WIRING BOARD ASSEMBLIES

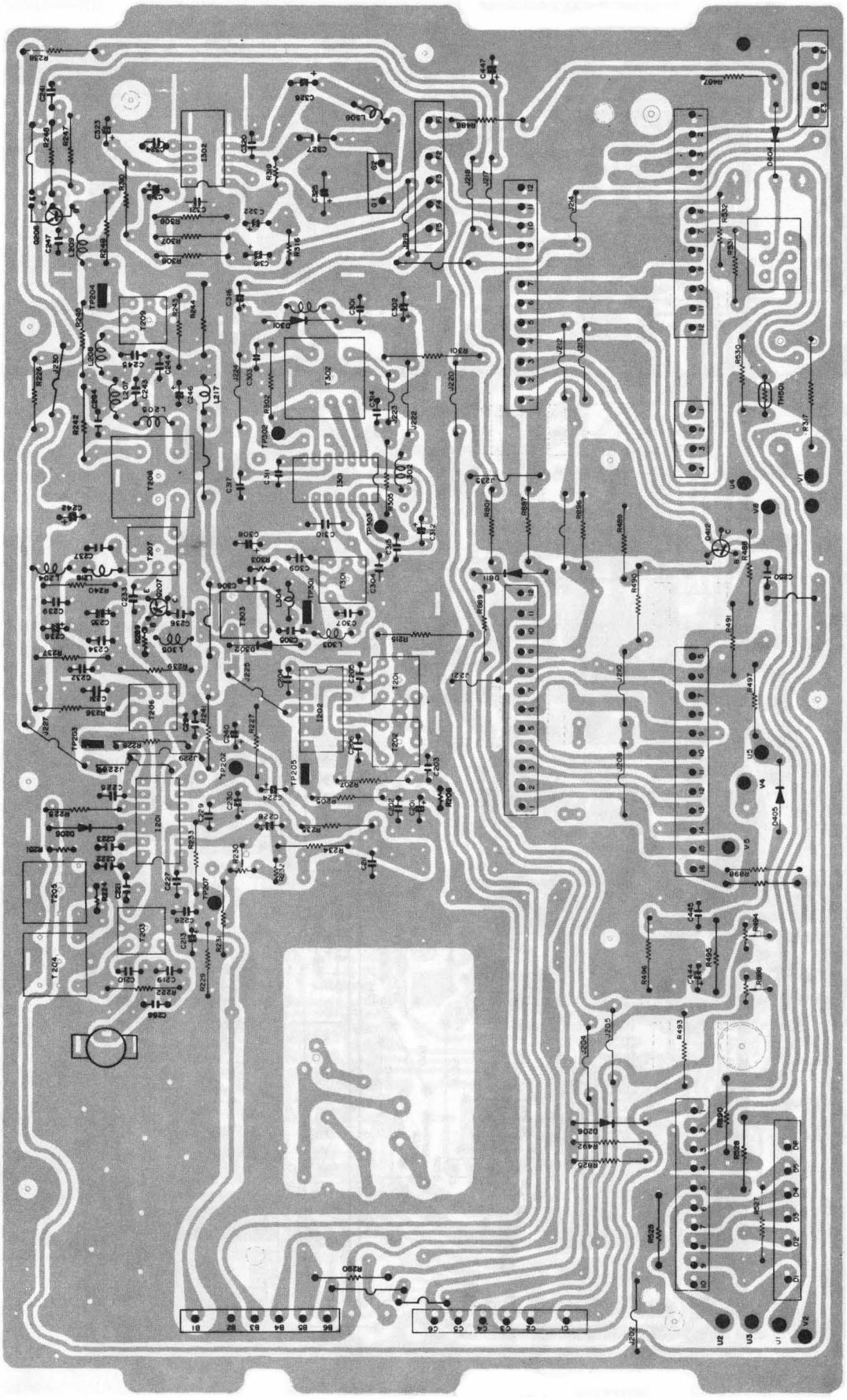

PWB-A Wiring Side

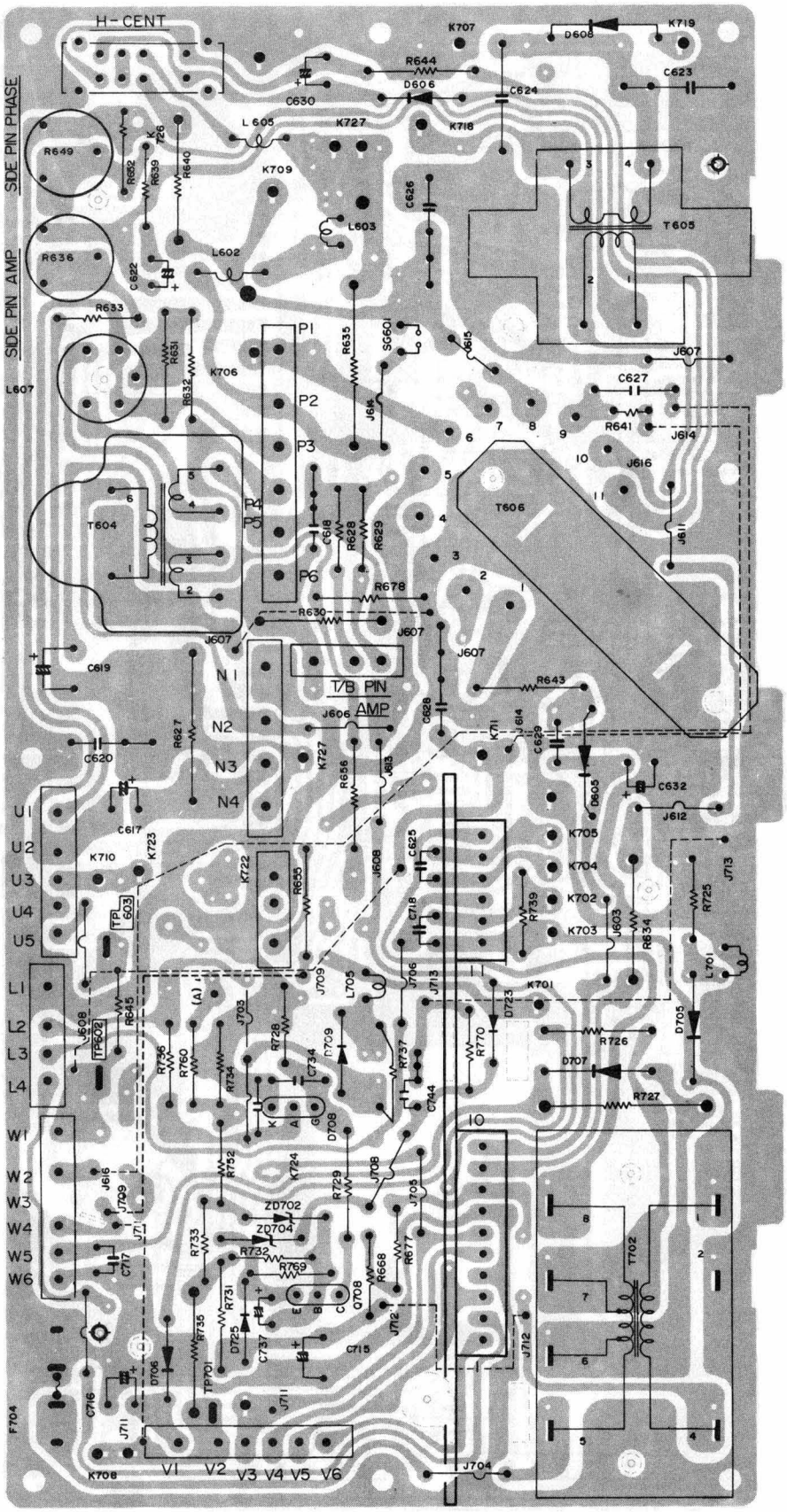

PWB-B Wiring Side

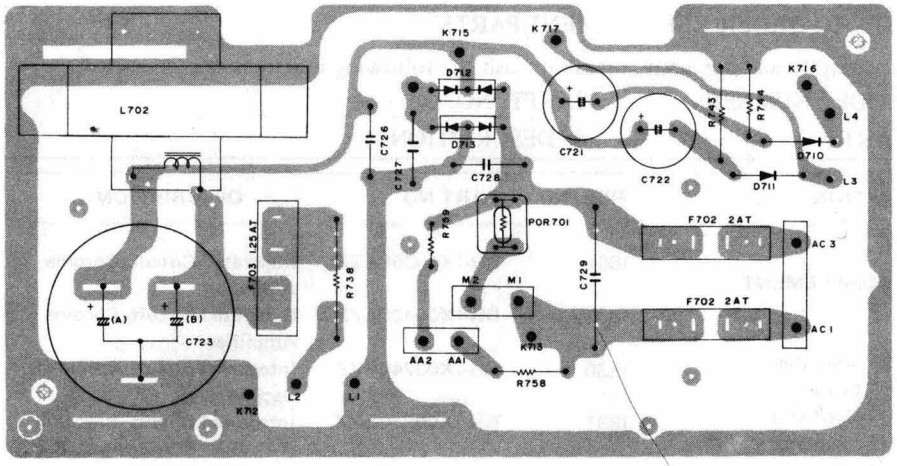

PWB-C Wiring Side

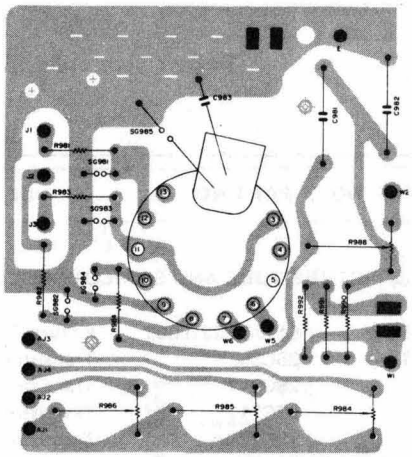

PWB-D Wiring Side

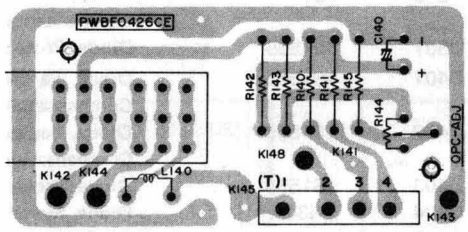

PWB-H Wiring Side

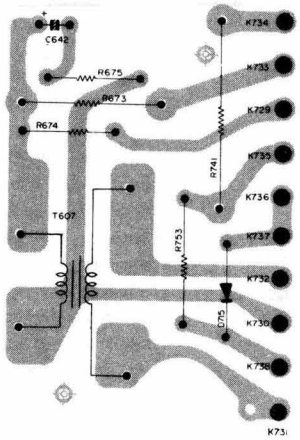

PWB-J Wiring Side

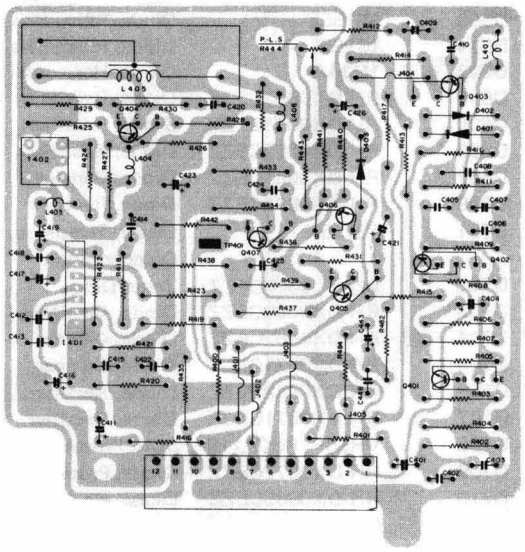

PWM-A Wiring Side

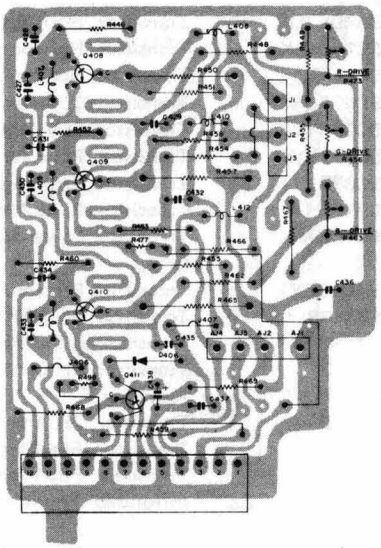

PWM-B Wiring Side

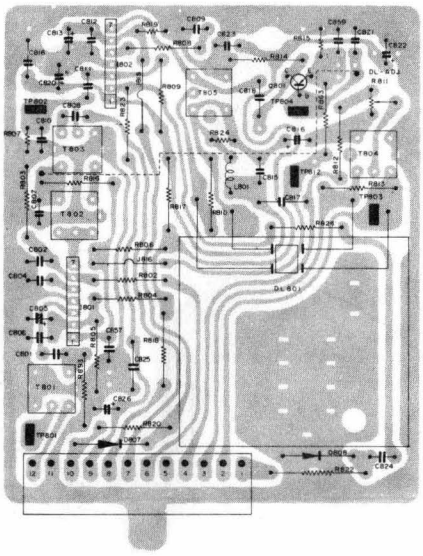

PWM-C Wiring Side

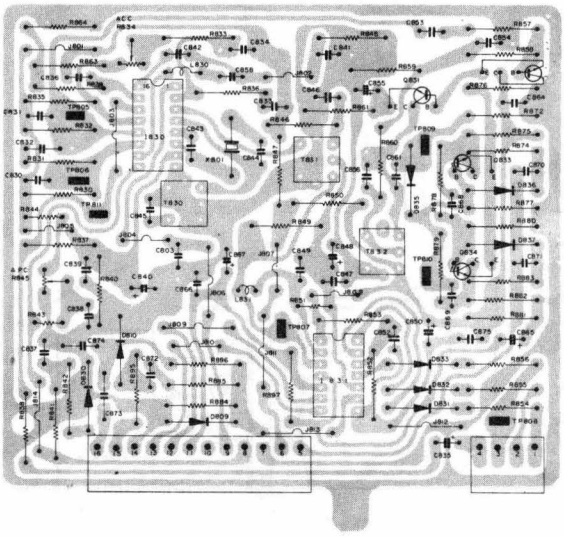

PWM-D Wiring Side

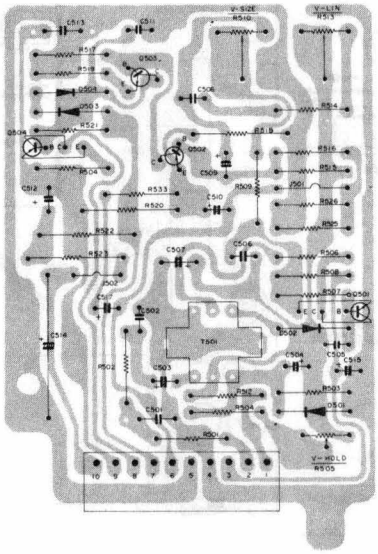

PWM-E Wiring Side

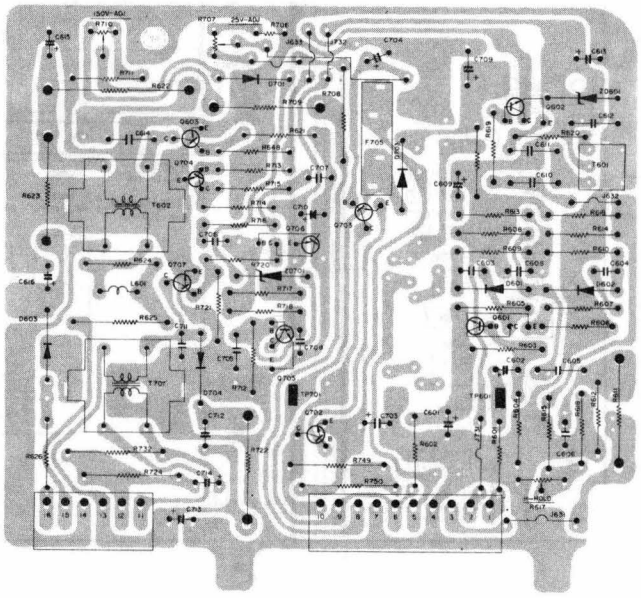

PWM-F Wiring Side

CHASSIS LAYOUT

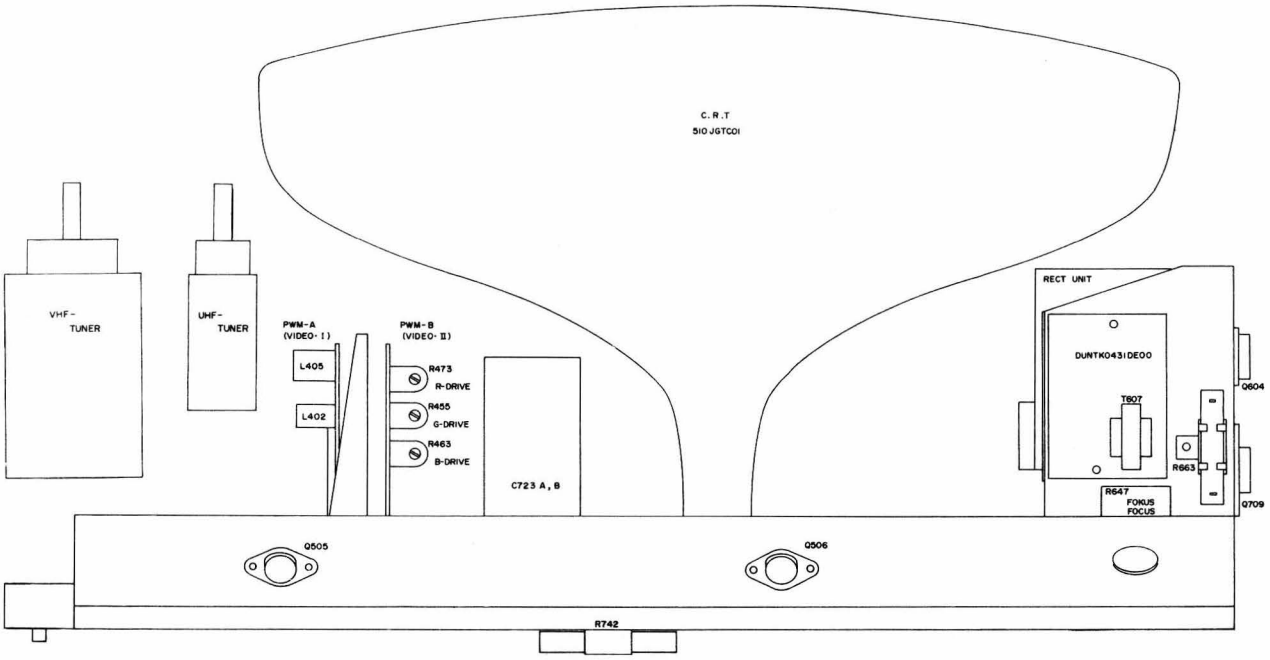

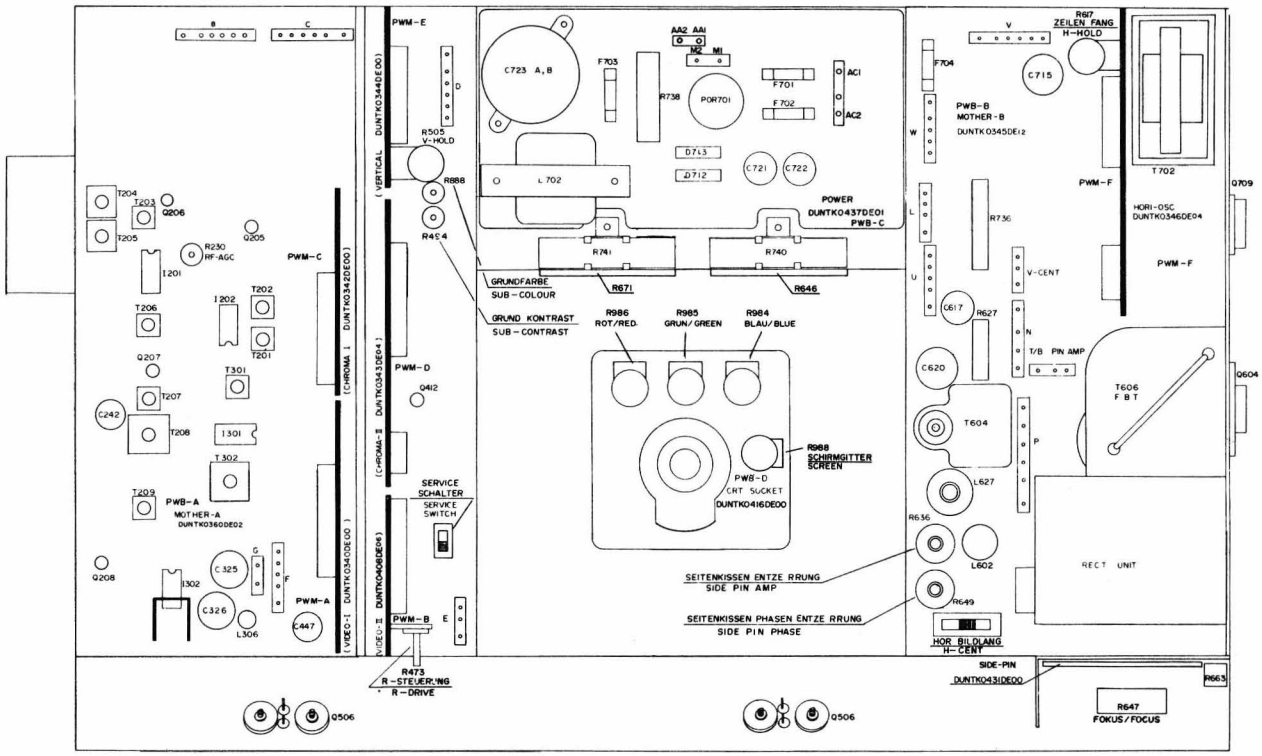

REPLACEMENT PARTS LIST

It is recommended to use genuine factory SHARP replacement parts to assure fine performance.

"HOW TO ORDER REPLACEMENT PARTS"

To have your order filled promptly and correctly, please furnish the following informations.

1. MODEL NUMBER
2. REF. NO.
3. PART NO.
4. DESCRIPTION

PICTURE TUBE AND SEMICONDUCTOR COMPLEMENT

REF. NO.	PART NO.	DESCRIPTION
CRT	510JGB22-TC01	Picture Tube
Q1	2SC398Y	Transistor, VHF-Amplifier
Q2	2SC717	Transistor, VHF Mixer
Q3	2SC717	Transistor, VHF Oscillator
Q52	2SC288A	Transistor, UHF Oscillator
Q207	2SC383 (W)	Transistor, Pix IF Amplifier
Q208	2SC380 (O)	Transistor, 1st Video Amplifier
Q401	2SC372 (Y)	Transistor, Sync. Separator
Q402	2SA495 (O)	Transistor, Sync. Amplifier
Q403	2SC372 (O)	Transistor, Gate Pulse Amplifier
Q404	2SC380 (O)	Transistor, 3rd Video Amplifier
Q405	2SA495 (O)	Transistor, Pulse Fromer
Q406	2SC372 (Y)	Transistor, Pedestal Clamp
Q407	2SC373	Transistor, 4th Video Amplifier
Q408	2SC1447	Transistor, Red Output
Q409	2SC1447	Transistor, Green Output
Q410	2SC1447	Transistor, Blue Output
Q411	2SA509 (O)	Transistor, 5th Video Amplifier
Q412	2SC372 (O)	Transistor, Pulse Former
Q501	2SC735 (O)	Transistor, Vertical Oscillator
Q502	2SA495 (Y)	Transistor, Vertical Drive
Q503	2SC1447	Transistor, Vertical Drive
Q504	2SA639S/ 2SA429	Transistor, Phase Inverter
Q505	2SC1104/ 2SC783	Transistor, Vertical Output
Q506	2SC1104/ 2SC783	Transistor, Vertical Output
Q601	2SC735 (O)	Transistor, Phase Splitter
Q602	2SA495 (O)	Transistor, Horizontal Oscillator
Q603	2SC1447BK	Transistor, Horizontal Drive
Q604	2SC1172	Transistor, Horizontal Output
Q702	2SD235 (Y)	Transistor, 25V Regulator
Q703	2SC372 (Y)	Transistor, 25V Regulator Drive
Q704	2SC372 (Y)	Transistor, Pulse Amplifier
Q705	2SC372 (Y)	Transistor, Error Amplifier
Q706	2SA495 (Y)	Transistor, Pulse Amplifier
Q707	2SC1569BK	Transistor, Power Regulator Drive
Q708	2SA818 (Y)	Transistor, Protector Drive
Q709	2SC1578	Transistor, Power Regulator
Q801	2SA495 (Y)	Transistor, Killer Amplifier
Q831	2SC373	Transistor, 2H Differential Amplifier
Q832	2SC373	Transistor, 2H Amplifier
Q833	2SC372 (O)	Transistor, Flip Flop
Q834	2SC372 (O)	Transistor, Flip Flop
I201	RH-IX0004CEZZ	Integrated Circuit, Pix IF Amplifier
I202	RH-IX0034CEZZ	Integrated Circuit, AFT
I301	RH-IX0022CEZZ	Integrated Circuit, S-IF, S-Det., Audio Amp.
I302	RH-IX0044CEZZ	Integrated Circuit, Audio Output
I401	RH-IX0042CEZZ	Integrated Circuit, Video Amp.
I801	RH-IX0035CEZZ	Integrated Circuit, Chroma Amplifier
I802	RH-IX0042CEZZ	Integrated Circuit, Chroma Amplifier
I830	RH-IX0024CEZZ	Integrated Circuit, 4.43MHz Oscillator
I831	RH-IX0031CEZZ	Integrated Circuit, Blanking, R-Y, G-Y, B-Y Demod., R-Y, G-Y, B-Y Amp.
D1	1S1555	Diode, Protector (VHF)
D2	1S2207	Diode, AFT (VHF)
D51	1S2187/ 1S516	Diode, UHF Mixer
D52	1S1922/ 1S2090	Diode, AFT (UHF)
D201	1S1555	Diode, AGC Bias
D205	1S1555	Diode, Protector
D206	1S1555	Diode, Temperature Compensation
D301	1S1555	Diode, Protector
D401	1S1555	Diode, Temperature Compensation
D402	1S1555	Diode, Temperature Compensation
D403	1S1555	Diode, Protector
D404	1N34A	Diode, Switching
D405	RH-DX0055CEZZ	Diode, Switching
D406	1S1555	Diode, Protector
D501	1N34A	Diode, Temperature Compensation
D502	RH-DX0046CEZZ	Diode, Protector
D503	1S1555	Diode, Idling Bias
D504	1S1555	Diode, Idling Bias
D602	1N34A	Diode, Horizontal AFC
D603	RH-DX0062CEZZ	Diode, Rectifier
D605	RH-DX0071CEZZ	Diode, Rectifier
D606	RH-DX0062CEZZ	Diode, Rectifier
D607	RH-DX0051CEZZ	Diode, Damper
D608	RH-DX0071CEZZ	Diode, Rectifier
D701	1S1555	Diode, Temperature Compensation
D702	RH-EX0017CEZZ	Zener Diode
D703	RH-DX0060CEZZ	Diode, Rectifier
D704	RH-DX0062CEZZ	Diode, Clipper
D705	RH-DX0071CEZZ	Diode, Damper
D706	RH-DX0062CEZZ	Diode, Rectifier
D707	RH-DX0071CEZZ	Diode, Rectifier
D708	VHSSF1R3G411E	SCR, Protector
D709	RH-DX0072CEZZ	Diode, Protector
D710	RH-DX0055CEZZ	Diode, Rectifier
D711	RH-DX0055CEZZ	Diode, Rectifier
D712	RH-DX0069CEZZ	Diode, Power
D713	RH-DX0070CEZZ	Diode, Power
D715	RH-DX0072CEZZ	Diode, Rectifier
D723	RH-DX0072CEZZ	Diode, Rectifier
D725	RH-DX0072CEZZ	Diode, Protector

PARTS LIST

REF. NO.	PART NO.	DESCRIPTION
D807	1N60-S	Diode, Temperature Compensation
D808	1S1553	Diode, Pulse Former
D809	1S1555	Diode, Protector
D810	1S1553	Diode, Pulse Former
D811	1N60-S	Diode, Pulse Former
D830	RH-DX0030CEZZ	Diode, Temperature Compensation
D831	1S1553	Diode, Protector
D832	1S1553	Diode, Protector
D833	1S1553	Diode, Protector
D835	1S1555	Diode, Gate
D836	1S1555	Diode, Protector
D837	1S1555	Diode, Protector
ZD201	RH-EX0047CEZZ	Zener Diode
ZD701	RH-EX0014TAZZ	Zener Diode
ZD702	RH-EX0028CEZZ	Zener Diode
ZD704	RH-EX0040CEZZ	Zener Diode
CDS	RH-PX0001CEZZ	Photo Conductive Cell (CDS)
POR701	RMPTP0018CEZZ	Positive Coefficient Thermistor, ADG
X801	RCRSA0011CEZZ	Crystal, 4.43MHz
TH501	RH-HZ0001CEZZ	Thermistor
	COILS AND TRANSFORMERS	
L140	VP-LK221K0000	Coil, Peaking 220μH
L204	VP-LK220K0000	Coil, Peaking 22μH
L205	VP-LK2R7K0000	Coil, Peaking 2.7μH
L207	VP-KF6R8K0000	Coil, Peaking 6.8μH
L208	VP-LK3R9K0000	Coil, Peaking 3.9μH
L209	VP-LK151K0000	Coil, Peaking 150μH
L216	VP-LK2R2K0000	Coil, Peaking 2.2μH
L217	VP-LK2R2K0000	Coil, Peaking 2.2μH
L301	VP-LK100K0000	Coil, Peaking 10μH
L302	VP-LK100K0000	Coil, Peaking 10μH
L303	VP-LK6R8K0000	Coil, Peaking 6.8μH
L304	VP-KF390J0000	Coil, Peaking 39μH
L305	VP-LK120K0000	Coil, Peaking 12μH
L306	RCILP0049CEZZ	Coil, Peaking 47μH
L401	VP-LK202K0000	Coil, Peaking 2.2mH
L403	VP-LK270K0000	Coil, Peaking 27μH
L404	VP-LK390K0000	Coil, Peaking 39μH
L405	RCILZ0032CEZZ	Coil, Delay Line (Y)
L406	VP-LK180K0000	Coil, Peaking 18μH
L407	VP-LK2R2K0000	Coil, Peaking 2.2μH
L408	VP-LK680K0000	Coil, Peaking 68μH
L409	VP-LK2R2K0000	Coil, Peaking 2.2μH
L410	VP-LK680K0000	Coil, Peaking 68μH
L411	VP-LK2R2K0000	Coil, Peaking 2.2μH
L412	VP-LK680K0000	Coil, Peaking 68μH
L601	RCILP0002CEZZ	Coil, Peaking
L602	RCILZ0226CEZZ	Coil, Horizontal Linearity
L603	RCILZ0232CEZZ	Coil, Horizontal Linearity
L605	RCILZ0208CEZZ	Coil, Horizontal Choke
L606	RCILP0045CEZZ	Coil, Peaking 4μH
L607	RCILZ0228CEZZ	Coil, Pincushion
L701	RCILP0044CEZZ	Coil, 4μH
L702	RTRNC0021CEZZ	Coil, Choke
L703	RCILG0072CEZZ	Coil, ADG
L705	RCILP0050CEZZ	Coil, Choke
L801	VP-LK5R6K0000	Coil, Peaking 5.6μH
L830	VP-LK820K0000	Coil, Peaking 82μH
L831	RCILZ0156CEZZ	Coil, Phase Shift
T201	RCILD0051CEZZ	Transformer, AFT Discriminator
T202	RCILD0052CEZZ	Transformer, AFT Discriminator
T203	RCILI0016CEZZ	Transformer, 1st P-IF
T204	RCILI0244CEZZ	Transformer, Adj. Chan. S-Trap
T205	RCILI0252CEZZ	Transformer, Sound Trap
T206	RCILI0034CEZZ	Transformer, 2nd P-IF
T207	RCILD0077CEZZ	Transformer, 3rd P-IF
T208	RCILD0073CEZZ	Transformer, 4th P-IF
T209	RCILI0035CEZZ	Transformer, 5.5MHz Trap
T301	RCILI0149CEZZ	Transformer, 1st Sound IF
T302	RCILD0055CEZZ	Transformer, Sound Discriminator
T303	RCILD0076CEZZ	Transformer, Composite Detector
T402	RCILI0263CEZZ	Transformer, 4.43MHz Trap
T501	RTRNQ0003CEZZ	Transformer, Vertical Oscillator
T601	RCILB0004CEZZ	Transformer, Horizontal Oscillator
T602	RTRNZ0034CEZZ	Transformer, Horizontal Drive
T604	RTRNQ0028CEZZ	Transformer, Pincushion
T605	RTRNQ0027CEZZ	Transformer, Pincushion
T606	RTRNF1086CEZZ	Transformer, Horizontal Flyback
T607	RTRNQ0033CEZZ	Transformer, Pincushion
T701	RTRNZ0034CEZZ	Transformer, Power Regulator Drive
T702	RTRNZ0043CEZZ	Transformer, Power Regulator
T801	RCILV0080CEZZ	Transformer, Chroma Take Off
T802	RCILV0081CEZZ	Transformer, 1st Bandpass (1)
T803	RCILV0054CEZZ	Transformer, 1st Bandpass (2)
T804	RCILZ0166CEZZ	Transformer, Matching
T805	RCILZ0167CEZZ	Transformer, Matching
T830	RCILV0079CEZZ	Transformer, APC
T831	RCILV0056CEZZ	Transformer, CW
T832	RCILB0004CEZZ	Transformer, 7.8KHz
DL801	RCILZ0168CEZZ	Delay Line, 63.94μS
	POTENTIOMETER	
R144	RVR-B4134CEZZ	2.2K ohm, OPC Adjust
R230	RVR-B4002CEZZ	4.7K ohm, RF AGC
R309	RVR-P1004CEZZ	5K ohm, Volume
R444	RVR-B4151CEZZ	2.2K ohm, Pedestal Level Set
R456	RVR-B4014CEZZ	500 ohm, Green Drive
R463	RVR-B4014CEZZ	500 ohm, Blue Drive
R473	RVR-B4014CEZZ	500 ohm, Red Drive
R485	RVR-Q1013CEZZ	500 ohm, Brightness
R494	RVR-B4151CEZZ	2.2K ohm, Sub Contrast
R499	RVR-Q1014CEZZ	2K ohm, Contrast
R505	RVR-B4189CEZZ	5K ohm, Vertical Hold
R510	RVR-B4036CEZZ	10K ohm, Vertical Size
R513	RVR-B4036CEZZ	10K ohm, Vertical Linearity
R617	RVR-B4188CEZZ	20K ohm, Horizontal Hold
R636	RVR-B4218CEZZ	330 ohm, Side Pincushion Amp.
R647	RVR-B1047CEZZ	15 Meg ohm, Focus
R649	RVR-B4027CEZZ	220 ohm, Side Pincushion Phase
R707	RVR-B4155CEZZ	4.7K ohm, +25V Adjust
R710	RVR-B4149CEZZ	1K ohm, +150V Adjust
R811	RVR-B4193CEZZ	100 ohm, Delay Time Adjust
R821	RVR-Z1006CEZZ	50K ohm, Colour Tone
R834	RVR-B4110CEZZ	330 ohm, ACC
R845	RVR-B4155CEZZ	10K ohm, APC
R888	RVR-B4151CEZZ	2.2K ohm, Sub Colour
R891	RVR-Q1018CEZZ	2K ohm, Colour
R984	RVR-B4216CEZZ	5K ohm, Blue Bias
R985	RVR-B4216CEZZ	5K ohm, Green Bias
R986	RVR-B4216CEZZ	5K ohm, Red Bias

PARTS LIST

REF. NO.	PART NO.	DESCRIPTION
R988	RVR-B4191CEZZ	1 Meg ohm, Screen
	CAPACITORS	
C101	VCEAAU1HC106Y	10μF, 50V, Electrolytic
C124	VCQPSU2DA103K	.01μF, 200V, Mylar
C140	VCEAAH1HC476Y	47μF, 50V, Electrolytic
C213	VCEAAH1CC106Y	10μF, 16V, Electrolytic
C230	VCEAAH1CC107Y	100μF, 16V, Electrolytic
C235	VCEAAH1CC476Y	47μF, 16V, Electrolytic
C238	VCEAAH1CC476Y	47μF, 16V, Electrolytic
C240	VCEAAH1AC336Y	33μF, 10V, Electrolytic
C242	VCEAAH1HC476Y	47μF, 50V, Electrolytic
C246	VCEAAH0JC476Y	47μF, 6.3V, Electrolytic
C250	VCQYSU1HM222K	2200PF, 50V, Mylar
C295	VCEAAH1EC107Y	100μF, 25V, Electrolytic
C302	VCEAAH1HC107Y	100μF, 50V, Electrolytic
C308	VCEAAH1CC476Y	47μF, 16V, Electrolytic
C312	VCEAAH1CC226Y	22μF, 16V, Electrolytic
C316	VCEAAH1CC226Y	22μF, 16V, Electrolytic
C318	VCEAAH1CC226Y	22μF, 16V, Electrolytic
C322	VCEAAH1CC226Y	22μF, 16V, Electrolytic
C323	VCEAAH1EC107Y	100μF, 25V, Electrolytic
C325	VCEAAH1EC477Y	470μF, 25V, Electrolytic
C326	VCEAAH1EC227Y	220μF, 25V, Electrolytic
C327	VCQYSH1HM184K	.18μF, 50V, Mylar
C403	VCQYSH1HM223K	.022μF, 50V, Mylar
C405	VCQYSH1HM682K	6800PF, 50V, Mylar
C406	VCQYSH1HM562K	5200PF, 50V, Mylar
C407	VCEAAH1CC106K	10μF, 16V, Electrolytic
C408	VCQPSB2JA562K	5600PF, 630V, Mylar
C410	VCEAAH1HC476Y	47μF, 50V, Electrolytic
C411	VCEAAH1CC476Y	47μF, 16V, Electrolytic
C412	VCEAAH1EC106Y	10μF, 25V, Electrolytic
C416	VCEAAH1EC476Y	47μF, 25V, Electrolytic
C417	VCEAAH1EC106Y	10μF, 25V, Electrolytic
C419	VCEAAH1EC106Y	10μF, 25V, Electrolytic
C423	VCEAAH1HC476Y	47μF, 50V, Electrolytic
C424	VCQYSH1HM103K	.01μF, 50V, Mylar
C438	VCEAAH1CC107Y	100μF, 16V, Electrolytic
C447	VCEAAH1HC107Y	100μF, 50V, Electrolytic
C501	VCQYSH1HM104K	.1μF, 50V, Mylar
C502	VCQYSH1HM103K	.01μF, 50V, Mylar
C505	VCQYSH1HM332K	.0033μF, 50V, Mylar
C506	VCSATA1VE106K	10μF, 35V, Electrolytic
C507	VCEAAH1HC227Y	220μF, 50V, Electrolytic
C509	VCEABU1EW106M	10μF, 25V, Electrolytic
C510	VCEAAH1EC107M	100μF, 25V, Electrolytic
C511	VCQYSH2DM472Q	.0047μF, 200V, Mylar
C512	VCEAAH1HC106Y	10μF, 50V, Electrolytic
C513	VCQYSH2DM104K	.1μF, 200V, Mylar
C514	VCEAAT2DW106Q	10μF, 200V, Electrolytic
C516	VCEAAT2DW336Q	33μF, 200V, Electrolytic
C517	VCEAAH1EC107Y	100μF, 25V, Electrolytic
C601	VCEAAH1HC226Y	22μF, 50V, Electrolytic
C603	VCQYSH1HM103K	.01μF, 50V, Mylar
C604	VCQYSH1HM103K	.01μF, 50V, Mylar
C605	VCQYSH1HM104K	.1μF, 50V, Mylar
C606	VCQYSH1HM393K	.039μF, 50V, Mylar
C608	VCQYSH1HM333K	.033μF, 50V, Mylar
C610	VCQPSB2JA103K	.01μF, 630V, Mylar
C611	VCQPSB2DA333K	.033μF, 200V, Mylar
C613	VCEAAH1HC226Y	22μF, 50V, Electrolytic
C614	VCQPSB2JA103K	.01μF, 630V, Mylar
C615	VCEAAH2AD106Q	10μF, 100V, Electrolytic
C616	VCEAAH2AD106Q	10μF, 100V, Electrolytic
C617	VCEABU1CW227M	220μF, 16V, Electrolytic
C618	VCQYSH2DM823K	.082μF, 200V, Mylar
C619	VCEAAH2AW227Y	220μF, 100V, Electrolytic
C620	VCQYSH1HM104K	.1μF, 50V, Mylar
C622	VCEAAH1CC227M	220μF, 16V, Electrolytic
C623	VCQPPU2GB184J	.18μF, 400V, Mylar
C624	VCQPPU2GB154J	.15μF, 400V, Mylar
C626	VCQPSD2DA474K	.47μF, 200V, Mylar
C627	VCKYPU3RZ103P	.01μF, 1.4KV, Discap
C628	VCQYSH2DM224K	.22μF, 200V, Mylar
C629	VCKYPB3AB102M	1000PF, 1KV, Discap
C630	VCEAAH1HC106Y	10μF, 50V, Electrolytic
C632	VCEAAH1HC476Y	47μF, 50V, Electrolytic
C633	VCQPPU3AB143J	.014μF, 1KV, Mylar
C634	VCQPPU3AB143J	.014μF, 1KV, Mylar
C635	VCKYPU3FB561K	560PF, 3.15KV, Discap
C637	VCKYPU3FB561K	560PF, 3.15KV, Discap
C641	VCKYPU3FB561K	560PF, 3.15KV, Discap
C642	VCEAAH1CC227M	220μF, 16V, Electrolytic
C701	VCEAAH1EC107Y	100μF, 25V, Electrolytic
C702	VCEAAH1EC476Y	47μF, 25V, Electrolytic
C703	VCEAAH1HC107Y	100μF, 50V, Electrolytic
C705	VCQYSH1HM103K	.01μF, 50V, Mylar
C706	VCQYSH1HM473K	.047μF, 50V, Mylar
C707	VCQYSH1HM153K	.01μF, 50V, Mylar
C709	VCEAAH1HC477Y	470μF, 50V, Electrolytic
C710	VCEAAH1HC226Y	22μF, 50V, Electrolytic
C714	VCEAAH1AC107Y	100μF, 10V, Electrolytic
C715	VCEAAH2ED476Q	47μF, 250V, Electrolytic
C716	VCEAAH1EC227Y	220μF, 25V, Electrolytic
C719	VCFYNT2GA105K	.01μF, 400V, Polyester
C721	VCEAAH2GD106Y	10μF, 400V, Electrolytic
C722	VCEAAH2GD106Y	10μF, 400V, Electrolytic
C723 A, B	VCEAGQ2GAA21Y	220μF/220μF, 400V, Electrolytic
C726	VCKYPU3RZ103P	.01μF, 1.4KV, Discap
C727	VCKYPU3RZ103P	.01μF, 1.4KV, Discap
C728	VCKYPU3RZ103P	.01μF, 1.4KV, Discap
C729	RC-QZ001SCEZZ	.47μF, 250V, Mylar
C744	VCQYSH2DM563K	.056μF, 200V, Mylar
C805	VCEAAH1EC106Y	10μF, 25V, Electrolytic
C818	VCQYSH1HM104K	.1μF, 50V, Mylar
C819	VCQYSH1HM104K	.1μF, 50V, Mylar
C820	VCEAAH1HC106Y	10μF, 50V, Electrolytic
C822	VCEAAH1HC476Y	47μF, 50V, Electrolytic
C826	VCEAAH1CC106Y	10μF, 16V, Electrolytic
C830	VCQYSH1HM153K	.015μF, 50V, Mylar
C831	VCQYSH1HM153K	.015μF, 50V, Mylar
C832	VCQYSH1HM154K	.1μF, 50V, Mylar
C833	VCQYSH1HM473K	.047μF, 50V, Mylar
C834	VCQYSH1HM223K	.022μF, 50V, Mylar
C836	VCQYSH1HM333K	.033μF, 50V, Mylar
C840	VCEAAH1HC107Y	100μF, 50V, Electrolytic
C846	VCEAAH1CC106Y	10μF, 16V, Electrolytic
C850	VCEAAH1HC476Y	47μF, 50V, Electrolytic
C853	VCQYSH1HM103Y	.01μF, 50V, Mylar
C854	VCQYSH1HM472K	4700PF, 50V, Mylar
C855	VCSATA1VE106K	10μF, 35V, Electrolytic
C856	VCQPSU2DA273K	.027μF, 200V, Mylar
C861	VCQYSH1HM103K	.01μF, 50V, Mylar
C867	VCEAAH1CC106Y	10μF, 16V, Mylar
C872	VCQYSH1HM223K	.022μF, 50V, Mylar
C873	VCQYSH2DM473K	.047μF, 200V, Mylar
C874	VCQYSH2DM223K	.022μF, 200V, Mylar

PARTS LIST

REF. NO.	PART NO.	DESCRIPTION
C981	VCQPSD2JA104K	.1μF, 630V, Mylar
C982	VCQPSD2JA104K	.1μF, 630V, Mylar
C983	VCCSPU3XL131K	130PF, 6KV, Discap
	RESISTORS	
R215	VRS-PT3AB821K	820 ohm, 1W, 10%, Oxide Film
R301	VRS-PT3AB681K	680 ohm, 1W, 10%, Oxide Film
R317	VRS-PT3DB220K	22 ohm, 2W, 10%, Oxide Film
R450	VRS-PT3DB822J	8.2K ohm, 2W, 5%, Oxide Film
R457	VRS-PT3DB822J	8.2K ohm, 2W, 5%, Oxide Film
R465	VRS-PT3DB822J	8.2K ohm, 2W, 5%, Oxide Film
R518	VRS-PT3AB392K	3.9K ohm, 1W, 10%, Oxide Film
R520	VRS-PT3AB103K	10K ohm, 1W, 10%, Oxide Film
R522	VRS-PT3AB332K	3.3K ohm, 1W, 10%, Oxide Film
R523	VRS-PT3AB332K	3.3K ohm, 1W, 10%, Oxide Film
R611	VRS-PT3DB222K	2.2K ohm, 2W, 10%, Oxide Film
R622	VRS-PT3LB182K	1.8K ohm, 3W, 10%, Oxide Film
R623	VRS-PT3DB181K	180 ohm, 2W, 10%, Oxide Film
R625	VRN-RT3AAR82J	.82 ohm, 1W, 5%, Metal Film
R626	VRN-RT3AA1R0K	1.0 ohm, 1W, 10%, Metal Film
R627	VRW-KT3HD330K	33 ohm, 5W, 10%, Cement
R630	VRS-PT3DB562K	5.6K ohm, 2W, 10%, Oxide Film
R631	VRS-PT3AB122K	1.2K ohm, 1W, 10%, Oxide Film
R632	VRS-PT3AB122K	1.2K ohm, 1W, 10%, Oxide Film
R634	VRS-PT3LB821J	820 ohm, 3W, 5%, Oxide Film
R635	VRS-PT3LB102K	1.0K ohm, 3W, 10%, Oxide Film
R640	VRS-PT3DB820K	82 ohm, 2W, 10%, Oxide Film
R643	VRN-RT3AA1R0K	1.0 ohm, 1W, 10%, Metal Film
R644	VRN-RT3AA2R2K	2.2 ohm, 1W, 10%, Metal Film
R646	VRW-CL4IC220K	22 ohm, 15W, 10%, Cement
R654	VRW-CL4AC271K	270 ohm, 10W, 10%, Cement
R655	VRS-PT3AB562K	5.6K ohm, 1W, 10%, Oxide Film
R656	VRS-PT3AB472K	4.7K ohm, 1W, 10%, Oxide Film
R671	VRW-CL41C151K	150 ohm, 15W, 10%, Cement
R673	VRS-PT3DB821K	820 ohm, 2W, 10%, Oxide Film
R678	VRS-PT3AB562K	5.6K ohm, 1W, 10%, Oxide Film
R709	VRS-PT3DB183J	18K ohm, 2W, 5%, Oxide Film
R722	VRS-PT3DB103K	10K ohm, 2W, 10%, Oxide Film
R723	VRN-RT3AA1R5J	1.5 ohm, 1W, 5%, Metal Film
R726	VRN-RT3AA1R0K	1.0 ohm, 1W, 10%, Metal Film
R727	VRN-RT3LA5R6K	5.6 ohm, 3W, 10%, Metal Film
R729	VRS-PT3AB561K	560 ohm, 1W, 10%, Oxide Film
R731	VRN-RT3AAR68K	.68 ohm, 1W, 10%, Metal Film
R733	VRD-SA2HD562G	5.6K ohm, 1/2W, 2%, Carbon
R734	VRD-SA2HD153G	15K ohm, 1/2W, 2%, Carbon
R735	VRN-RT3DA1R0K	1.0 ohm, 2W, 10%, Metal Film
R736	RR-BZ0005CEZZ	4.7 ohm, 7W, Special
R738	RR-BZ0005CEZZ	4.7 ohm, 7W, Special
R740	VRW-CL4IC272K	2.7K ohm, 15W, 10%, Cement
R741	VRS-PT3LB683K	68K ohm, 3W, 10%, Oxide Film
R742	VRW-CL4DA100K	10 ohm, 20W, 10%, Cement
R743	VRS-PT3AB103K	10K ohm, 1W, 10%, Oxide Film
R745	VRS-PT3AB390J	39 ohm, 1W, 5%, Oxide Film
R746	VRS-PT3AB221J	220 ohm, 1W, 5%, Oxide Film
R748	VRS-PT3AB390J	39 ohm, 1W, 5%, Oxide Film
R749	VRS-PT3AB150J	15 ohm, 1W, 5%, Oxide Film
R750	VRS-PT3AB150J	15 ohm, 1W, 5%, Oxide Film
R752	VRD-SA2HD153G	15K ohm, 1/2W, 2%, Carbon
R753	VRS-PT3AB683K	68K ohm, 1W, 10%, Oxide Film
R822	VRS-PT3AB183K	18K ohm, 1W, 10%, Oxide Film
R830	VRD-SB2EY184G	180K ohm, 1/4W, 2%, Carbon
R832	VRD-SB2EY204G	200K ohm, 1/4W, 2%, Carbon
	PRINTED WIRING BOARD ASSEMBLIES	
PWB-A	DUNTK0360DE02	Mother-A Unit
PWM-A	DUNTK0340DE00	Video-1 Module
PWM-B	DUNTK0408DE06	Video-2 Module
PWM-C	DUNTK0342DE00	Chroma-1 Module
PWM-D	DUNTK0343DE00	Chroma-2 Module
PWM-E	DUNTK0344DE00	Vertical Module
PWB-B	DUNTK0345DE12	Mother-B Unit
PWM-F	DUNTK0346DE04	Horizontal Module
PWB-C	DUNTK0437DE01	Power Unit
PWB-D	DUNTK0416DE00	CRT Bias Unit
PWB-H	DUNTK0426DE00	OPC Switch Unit
PWB-J	DUNTK0431DE00	Pincushion Unit
	MISCELLANEOUS	
F701	QFS-C2022TAZZ	Fuse, 2A
F702	QFS-C2022TAZZ	Fuse, 2A
F703	QFS-C1221CEZZ	Fuse, 1.25A
F704	QFS-C1221CEZZ	Fuse, 1.25A
F705	QFS-C4011CEZZ	Fuse, 400mA
	QACCL5001CEZZ	Cord, AC
	QSW-P0056CEZZ	Switch, Power
	QSW-S0006CEZZ	Switch, H-CENT
	QSW-S0007CEZZ	Switch, Service
	QSW-P0033CEZZ	Switch, OPC
SG601	QSPGH0005CEZZ	Spark Gap
SG981, 982 983, 986	QSPGC0003CEZZ	Spark Gap
SG984	QSPGC0005CEZZ	Spark Gap
SG985	QSPGH0004CEZZ	Spark Gap
	QTANN0623CEZZ	Aerial Terminal
	RRET-0016CEZZ	High Voltage Rectifier Unit
	RLMPE0003CEZZ	Lamp, OPC
SP301	VSP0010P-218A	Speaker
	VTUGT3-1A7M	Tuner, VHF
	VTUUTE-3A2J	Tuner, UHF
	CABINET PARTS	
	GCABA1061CESA	Cabinet, Front
	GCABB1095CESA	Cabinet, Back
	GCOVA1053CESA	Decoration Cover, OPC Window
	GCOVH1060CESA	Hole Cover
	GDORF1040CESA	Door
	HBDGB3021CESA	Badge, Colour Mark
	HBDGC3023CESA	Badge, Corporation Mark
	HDECQ0085CESA	Decoration Cover, CDS
	HINDM0576CESA	Indication Plate, OPC, ON-OFF
	HINDM0662CESA	Indication Plate, UHF, VHF
	HPNLC1165CESA	Control Panel
	JKNBC0240TASA	Knob, VHF Channel Selector
	JKNBC0241TASA	Knob, UHF Fine Tuning
	JKNBM0054TASA	Knob, UHF Tuning
	JKNBM1023CESA	Knob, VHF Fine Tuning
	JKNBP1040CESA	Button, OPC, Power
	JKNBP1041CESB	Knob, Slide Controls

A6192-2.0M
MAN-3186CE
Printed in Japan
T1038-I

UHF TUNER

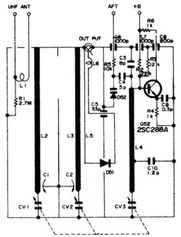

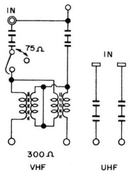

VHF TUNER

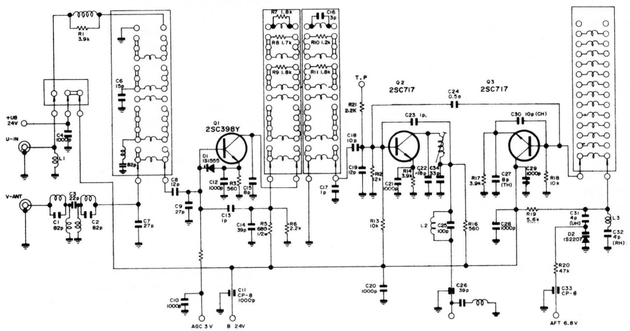

NOTES

VOLTAGE MEASUREMENT CONDITIONS

1. *Voltages in parenthesis measured with no Signal.*
2. *Voltages without parenthesis measured with 1000μV B & W or Colour Signal.*

WAVEFORM MEASUREMENT CONDITIONS
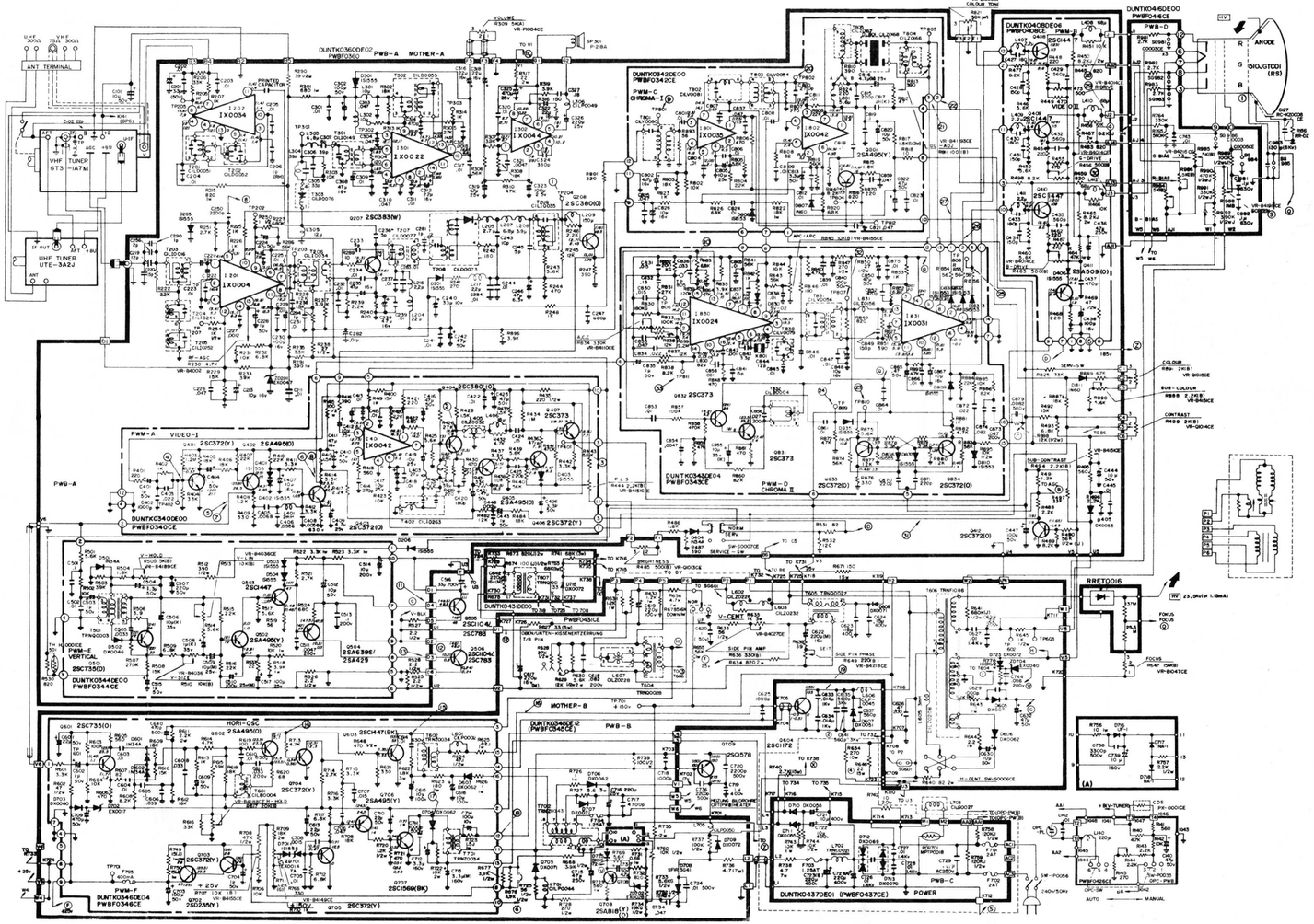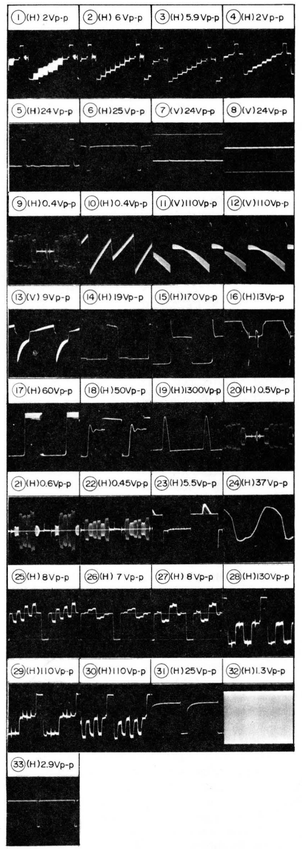
1. *Colour bar generator signal of 2V peak to peak applied at base of 1st Video Amplifier (Q208).*
2. *Approximately 8V AGC bias.*