SCHEMATIC DAIAGRAM

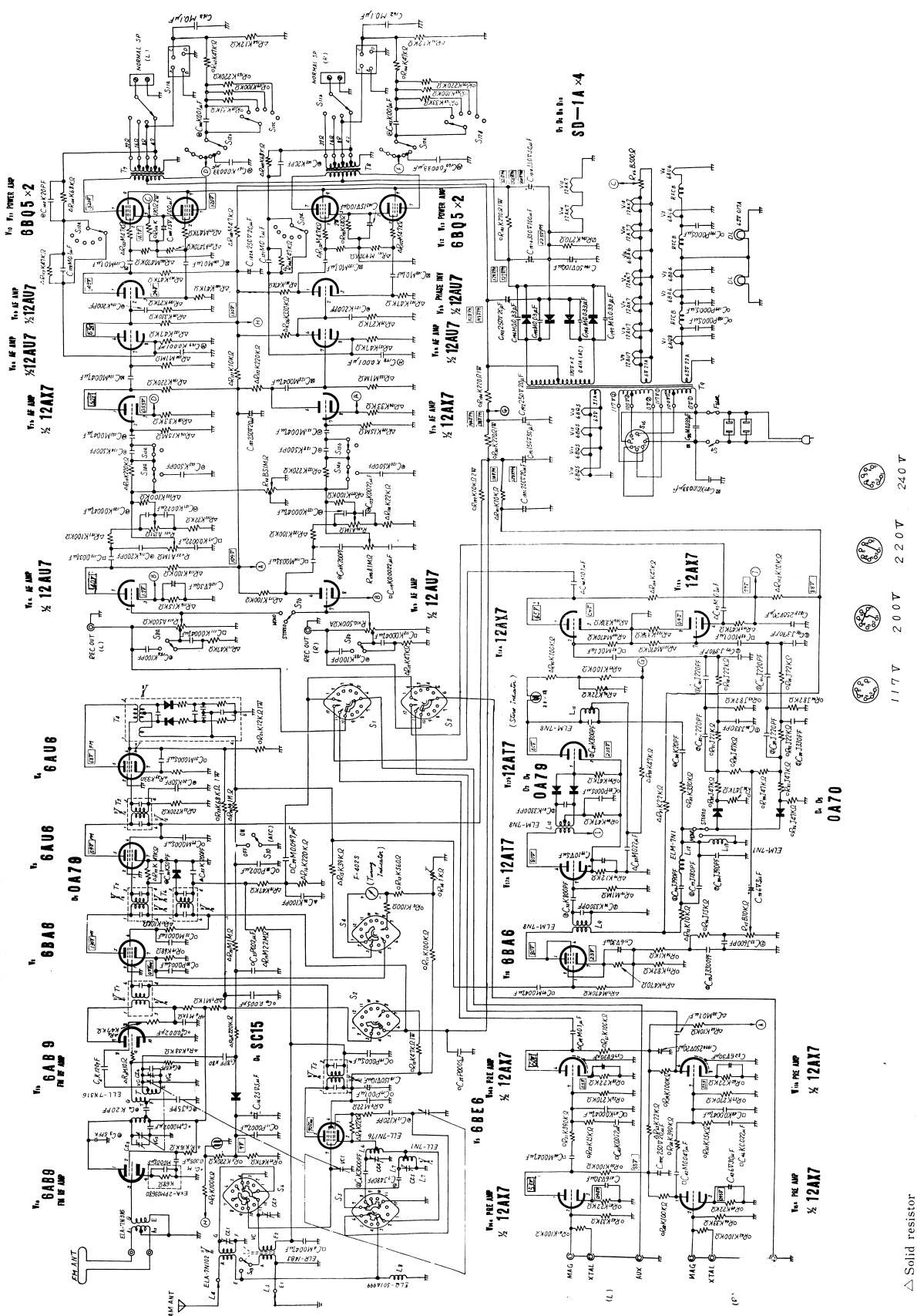

$S_1 \sim S_6$.....SELECT switch, shown at "AUX" position; can be set also to PH, FM, MW and SW in that order.

S_7.....MODE switch, shown at "STEREO" position.

S_8.....LOUDNESS switch, shown at "OFF" position.

S_9.....POWER switch, shown at "OFF" position.

S_{10}.....FM AFC switch, shown at "ON" position.

S_{11}.....IMPEDANCE change switch, shown at "4Ω" position.

S_{12}.....MFB switch, shown at "OFF" position.

S_{13}.....DX-LOCAL switch at the rear of the set, shown at "LOCAL" position.

S_{14}.....HIGH FILTER switch, shown at "OFF" position.

S_{15}.....LOW FILTER switch, shown at "OFF" position.

S_{16}.....VOLT SELECT socket. Insert the appropriate plug here, according to your power source voltage. (plugs for various voltages are in the polyethylane parts bag).

△ Solid resistor
◁ ○ Carbon resistor
⊠ Resin-coated resistor
◎ ○ Ceramic capacitor
○ Hi-K ceramic capacitor
Ⓜ Polyester capacitor
Ⓢ Polystyrene capacitor
▲ Mica capacitor
● Temperature compensation capacitor
□ ECN-R type paper capacitor
⊠ ECN-B type paper capacitor
△ ECH-R type paper capacitor

MATSUSHITA ELECTRIC INDUSTRIAL CO., LTD.
Kadoma, Osaka, Japan

Printed in Japan