SERVICE DATA
FILE NO. 170-028

TOSHIBA

AM/FM STEREO RECEIVER

SA-320L

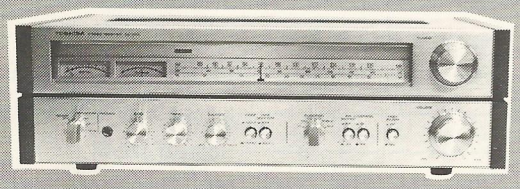

SPECIFICATIONS

■ FM TUNER SECTION

Receiving Frequency : 88 ~ 108 MHz
Sensitivity (IMF) : 1.9 μV
Harmonic Distortion :
MONO Less than 0.2% (400Hz 100%)
STEREO Less than 0.4% (400Hz 100%)
Signal-to-Noise Ratio : 70dB
Frequency Response : 20Hz ~ 20 kHz +0.2 -2dB
Image Rejection : 60dB (98 MHz)
IF Rejection : 90dB (98 MHz)
Capture Ratio (IHF) : 1.0dB
AM Suppression : 50dB
Stereo Separation : More than 40dB (1 kHz)

■ MW TUNER SECTION

Receiving Frequency : 525 ~ 1605 kHz
Sensitivity IHF : 15 μV (ext. Antenna)
200 μV (Ferrite Antenna)
Image Rejection : 50dB (1400 kHz)
IF Rejection : 40dB (600 kHz)
Signal-to-Noise Ratio : 50dB
Selectivity : 35dB

■ LW SECTION

Receiving Frequency : 145 ~ 360 kHz
Sensitivity IHF,
Bar Antenna : 350 μV/m
Image Rejection : 45dB
Signal-to-Noise Ratio : 50dB
Selectivity : 35dB

■ AUDIO SECTION

Power Output
19 watts per channel, min. PMS, at 4 ohms
from 20 Hz to 20 kHz
15 watts per channel, min. RMS, at 8 ohms
from 20 Hz to 20 kHz
11 watts per channel, min. RMS at 16 ohms
from 20 Hz to 20 kHz
With no more than 0.8% total harmonic distortion
Continuous Power Output
Both channels driven (1 kHz)
18W + 18W (8 ohms)
24W + 24W (4 ohms)
Harmonic Distortion
20Hz to 20 kHz Continuous Power Output : Less than 0.4%
1W + 1W, Power Output : Less than 0.08%
Intermodulation Distortion
Continuous Power Output : Less than 0.4%
1W + 1W, Power Output : Less than 0.08%
Frequency Response:
PHONO (RIAA Equalization) : 30Hz ~ 15 kHz ±1dB
AUX, TAPE : 20Hz ~ 30 kHz ±1dB
Input Sensitivity (Impedance)
PHONO : 2.5mV (47K ohms)
AUX : 150mV (50K ohms)
TAPE : 150mV (50K ohms)
Recording Output
TAPE REC. : 150mV
TAPE DIN. : 30mV (80K ohms)
Signal-to-Noise Ratio
(IHF, Short-circuit, A NETWORK)
PHONO : 70dB
AUX, TAPE P.B. : 90dB
Residual Noise : Less than 1mV
Speaker Impedance A, B 4 ~ 16 ohms
A + B 8 ~ 16 ohms
Headphone Impedance : 4 ~ 16 ohms
Tone Control
Bass (100Hz) : ±10dB
Treble (10 kHz) : ±10dB
Loudness (Volume 40dB) +10dB (100Hz), +5dB (10 kHz)
Damping Factor (1 kHz, 8 ohms) more than 30

■ MISCELLANEOUS

Power Voltage: AC 220/240V 50/60Hz
Power Consumption: 140W
White noise, rating output, filter
Dimentions 500 (W) x 158 (H) x 435 (D) mm
Weight 11.0 kg (25–6/16 lbs)

TABLE OF CONTENTS

1 OPERATING CONTROLS 3
1-1 FRONT VIEW 3
1-2 REAR VIEW 3
2 PARTS LOCATION 4
2-1 CHASSIS TOP VIEW 4
2-2 CHASSIS BOTTOM VIEW 4
3 DISASSEMBLY INSTRUCTIONS 5
3-1 CABINET REMOVAL 5
3-2 BOTTOM BOARD REMOVAL 5
4 DIAL CORD RESTRINGING INSTRUCTIONS 6
5 CIRCUIT ADJUSTMENTS 6
5-1 POWER TRANSISTOR IDLING CURRENT ADJUSTMENT 6
5-2 FM ADJUSTMENT 7
5-3 FM MPX ADJUSTMENT 8
5-4 AM (LW and MW) ADJUSTMENT . . . . . 9 ~ 10
6 SEMICONDUCTOR BASE DIAGRAMS 11
7 INTEGRATED CIRCUIT DIAGRAMS . . . . . 11 ~ 12
8 ELECTRICAL PARTS LOCATION 13
8-1 BOTTOM VIEW OF CONTROL P.C. BOARD (AF-114B-UNIT) 13
8-2 BOTTOM VIEW OF POWER AMP. P.C. BOARD (PA-41B-UNIT). 13
8-3 BOTTOM VIEW OF EQUALIZER P.C. BOARD (AF-118-UNIT) 14
8-4 BOTTOM VIEW OF TUNER P.C. BOARD (STP-49-UNIT) . . . . . 15 ~ 16
8-5 BOTTOM VIEW OF AM (LW and MW) O.S.C. P.C. BOARD (ETC-7-UNIT) 17
8-6 TOP VIEW OF AM FERRITE ANTENNA 17
8-7 BOTTOM VIEW OF POWER SUPPLY P.C. BOARD (CCT-SPLY-23C-UNIT) 18
9 SCHEMATIC DIAGRAM . . . . . 19 ~ 20
10 EXPLODED VIEW . . . . . 21 ~ 22
11 PARTS LIST . . . . . 23 ~ 25

1. OPERATING CONTROLS

1-1 FRONT VIEW

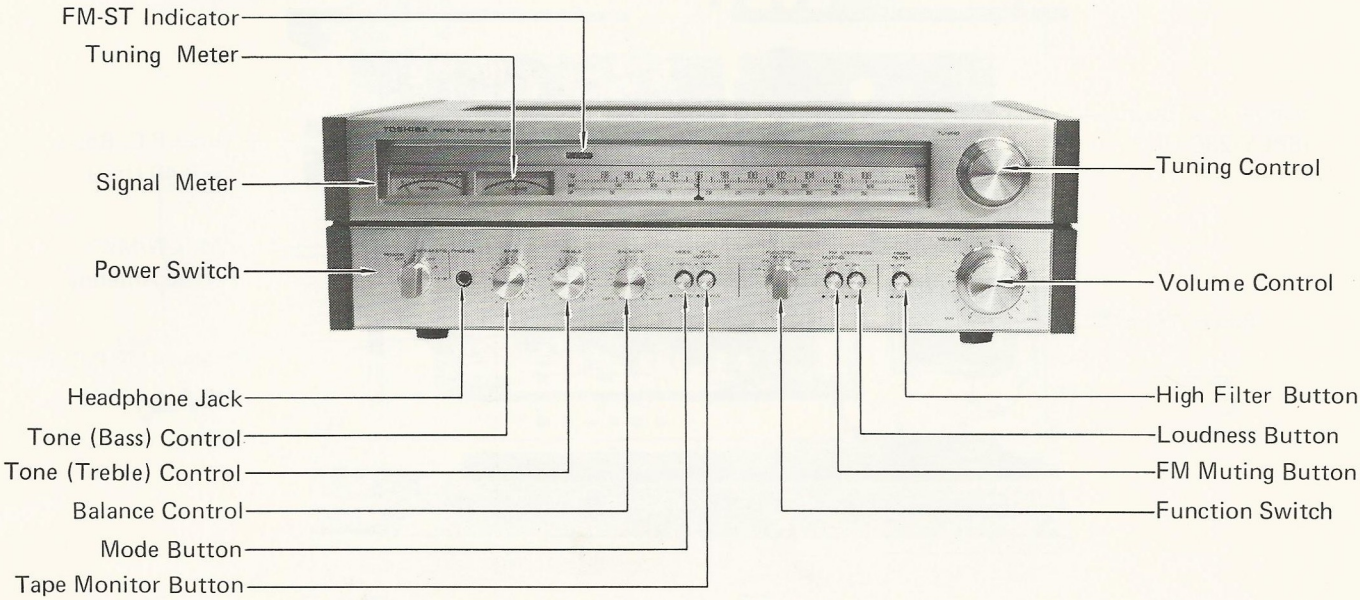

1-2 REAR VIEW

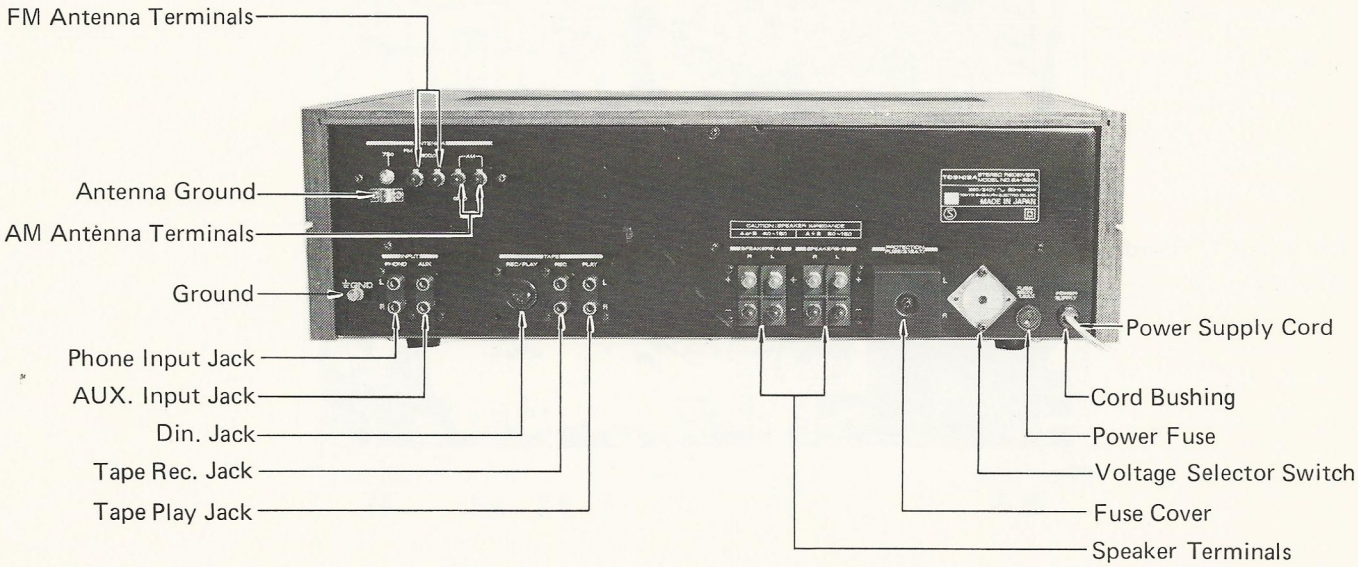

2. PARTS LOCATION

2-1 CHASSIS TOP VIEW

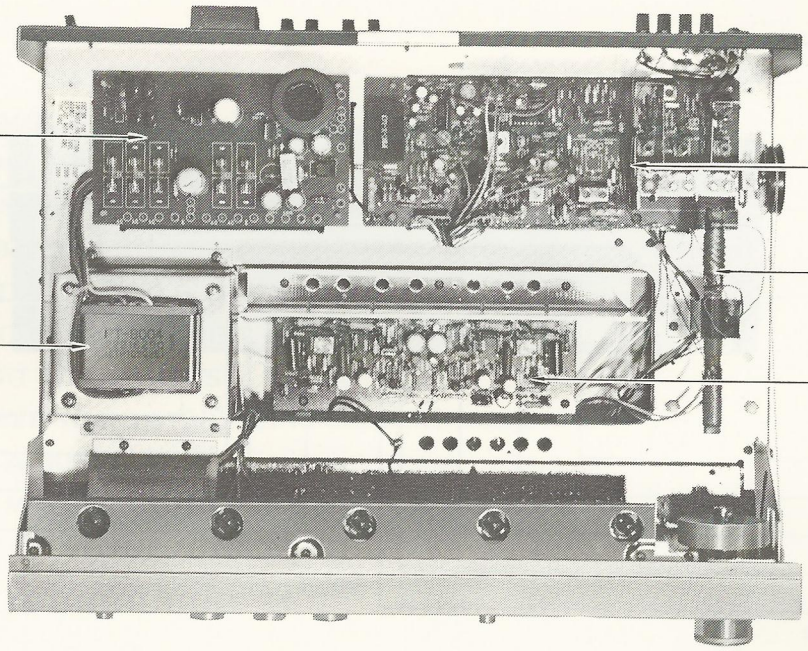

2-2 CHASSIS BOTTOM VIEW

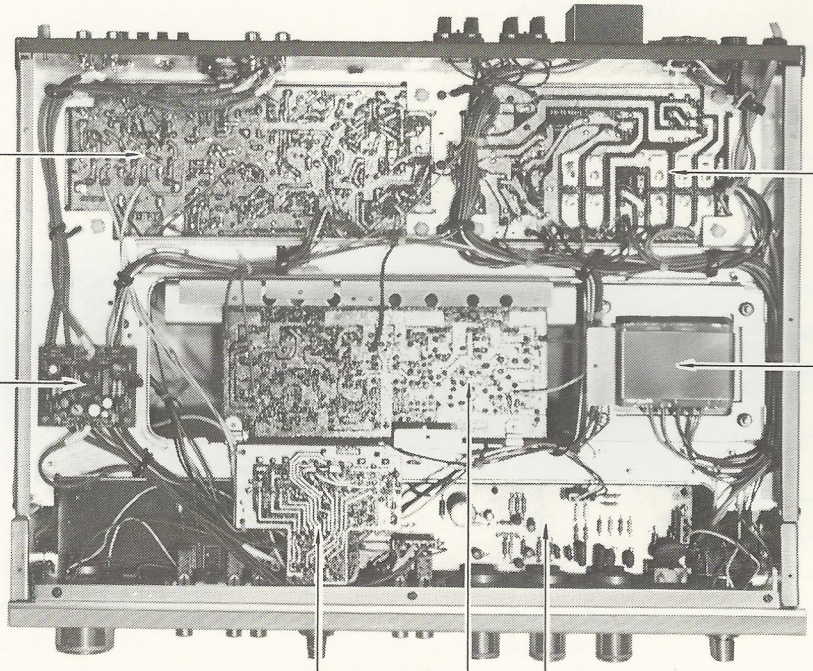

3. DISASSEMBLY INSTRUCTIONS

3-1 CABINET REMOVAL

Remove the five screws, Nos. 1, 2, 3, 4 and 5.

Separate the top cabinet from the chassis.

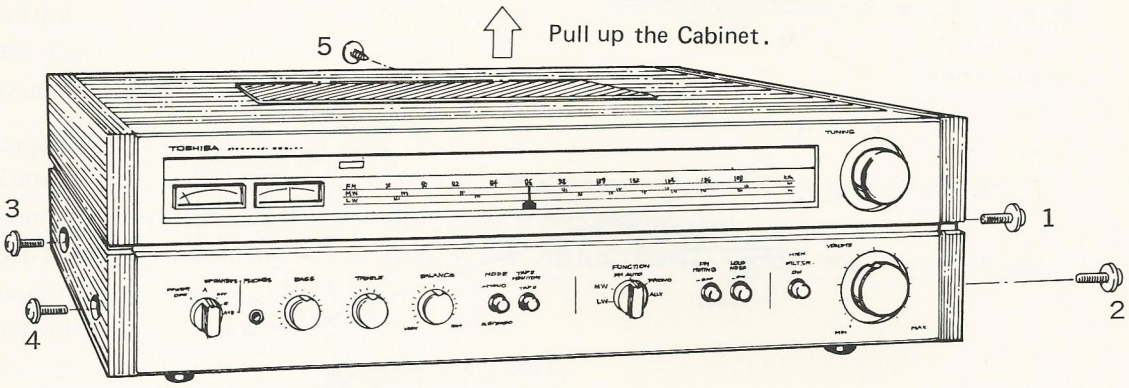

Figure 1.

3-2 BOTTOM BOARD REMOVAL

1. Remove twelve screws①.
2. Open the bottom board in the direction ②.

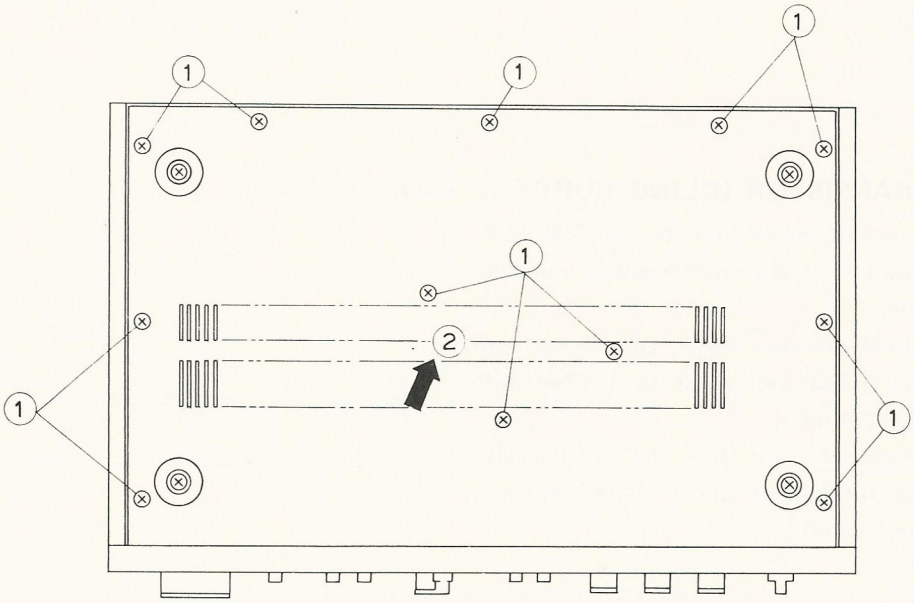

Figure 2.

4. DIAL CORD RESTRINGING INSTRUCTIONS

1. Turn the tuning knob fully counterclockwise.
2. Tie the spring and the dial cord as shown in the illustration.
3. Proceed dial cord restring as follows.

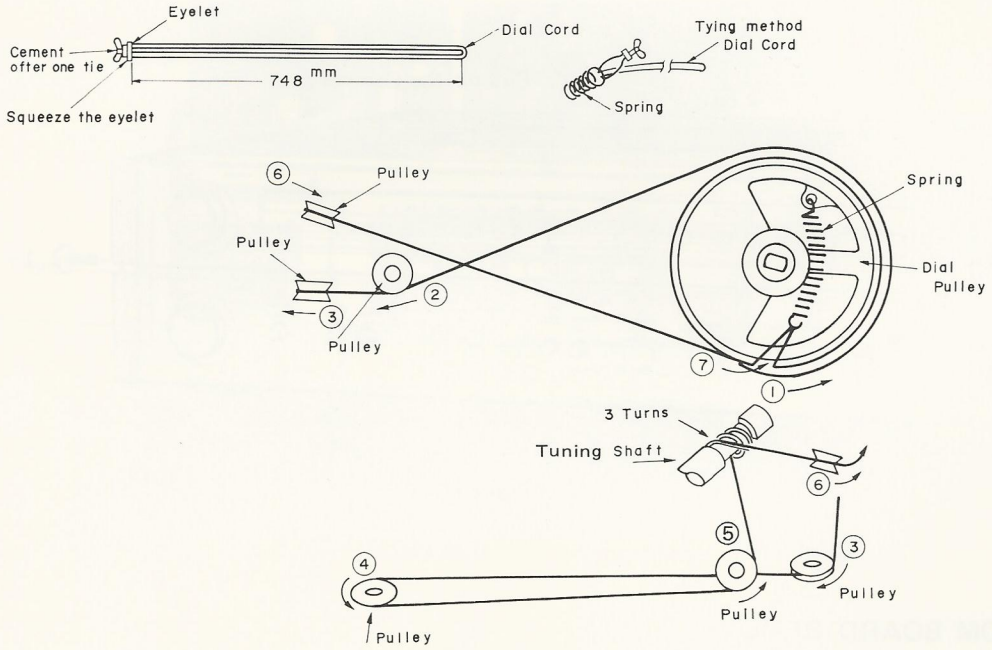

Figure 3.

5. CIRCUIT ADJUSTMENTS

5-1 POWER TRANSISTOR IDLING CURRENT ADJUSTMENT

Turn the stereo receiver on, set function switch to AUX. position, and rotate volume control knob to minimum (counterclockwise).

Connect the VTVM (Millivolt Meter, DC) to the both sides of resistor (R633) and adjust to 15±2mV with Semi-fixed resistor (VR601).

Connect the VTVM (Millivolt Meter, DC) to the both sides of resistor (R634) and adjust to 15±2mV with Semi-fixed resistor (VR602).

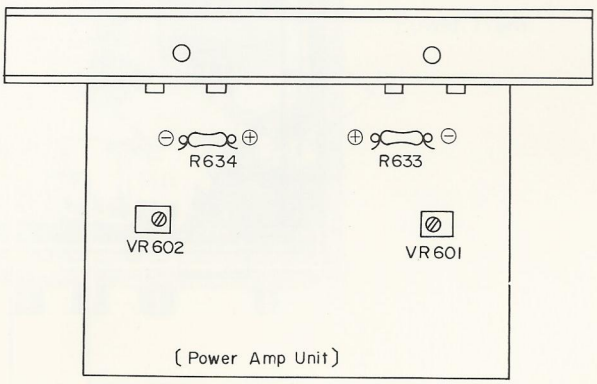

Figure 4.

POWER AMP. Block for Idling Adjustment

5-2 FM ADJUSTMENT

- **Test Equipments and Tools Required**

- Signal generator with a frequency range at least from 10MHZ to 220MHZ (FM)
- Sweep marker generator
- Oscilloscope with a wide range amplifier of approximately 100kHz
- VTVM
- FM dummy antenna (300 ohm)
- Dummy load resistor (8 ohm)

- **Adjustment**

1. Turn on the FM signal generator and the VTVM allowing a fifteen-minute warm-up period.
2. Connect the VTVM across the voice coil or an 8 ohm dummy load.
3. Set signal generator frequency as listed in FM ADJUSTMENT CHART and maintain a sufficient output level to provide an indication on VTVM.
4. Set volume control at mid-position.
5. Proceed as outlined in FM ADJUSTMENT CHART.

- **FM ADJUSTMENT CHART**

Step	Item	Signal Generator Frequency	Radio Dial Setting	Output Terminal	Adjustment	Remarks
1	I.F.T. adjustment	10.7 MHz Sweep generator	Tuning Gang fully counterclockwise	R213 (FM TP-2)	IT-101 IT-201	Adjust for the best waveform.
2	Local oscillation adjustment	87.5 MHz (400Hz 100% Mod.)	Tuning Gang fully counterclockwise	Speaker Terminal	OSC Coil L-103	Adjust for maximum output indication.
3		109 MHz (400Hz 100% Mod.)	Tuning Gang fully clockwise	Speaker Terminal	OSC Trimmer TC-103	Adjust for maximum output indication.
4	Repeat steps 2 & 3 as required.					
5	R.F. tracking adjustment	88 MHz (400Hz 100% Mod.)	Tune to Signal	Speaker Terminal	R.F. Coil L-101 L-102	Adjust for maximum output indication.
6		108 MHz (400Hz 100% Mod.)	Tune to Signal	Speaker Terminal	Ant. Trimmer TC-101 TC-102	Adjust for maximum output indication.
7	Repeat Steps 5 & 6 as required. (Note: Minimize the level of signal generator as possible.)					
8	Signal meter adjustment	98 MHz 400Hz 100% Mod. 100dB)	Tune to Signal	Speaker Terminal	VR-201	Adjust as the meter swings 4 — 5.

CAUTION
WHEN REALIGNING THE FM RECEIVING FREQUENCY, THE LOWEST SIDE OF THE FREQUENCY RANGE MUST NOT BE BELOW 87.5 MHz IN ORDER TO COMPLY WITH FTZ REGULATIONS IN WEST GERMANY.

5-3 FM MPX ADJUSTMENT

1. Turn on the FM signal generator and the VTVM allowing a fifteen-minute warm-up period.
2. Connect the signal generator across the FM antenna terminal.
3. Connect the VTVM across the voice coil or an 8 ohm dummy load.
4. Set signal generator frequency as listed in FM MPX ADJUSTMENT CHART and maintain a sufficient output level to provide indication on VTVM.
5. Set volume control knob to mid-position.
6. Proceed as outlined in FM MPX ADJUSTMENT CHART.

Step	Item	Signal Generator Frequency	Radio Dial Setting	Output Terminal	Adjustment	Remarks
1	Pilot signal adjustment	No Signal	Any Position	TP-1	VR-302	Adjust so that the Frequency is counted at 19 kHz.
2	Separation adjustment	98 MHz Stereo Signal (1 kHz 90% Mod.) L (R) channel	98 MHz	Speaker Terminal R (L) channel	VR-301	Adjust opposite channel's output level for minimized indication.

Note: Refer to page 7 for test equipment connections.

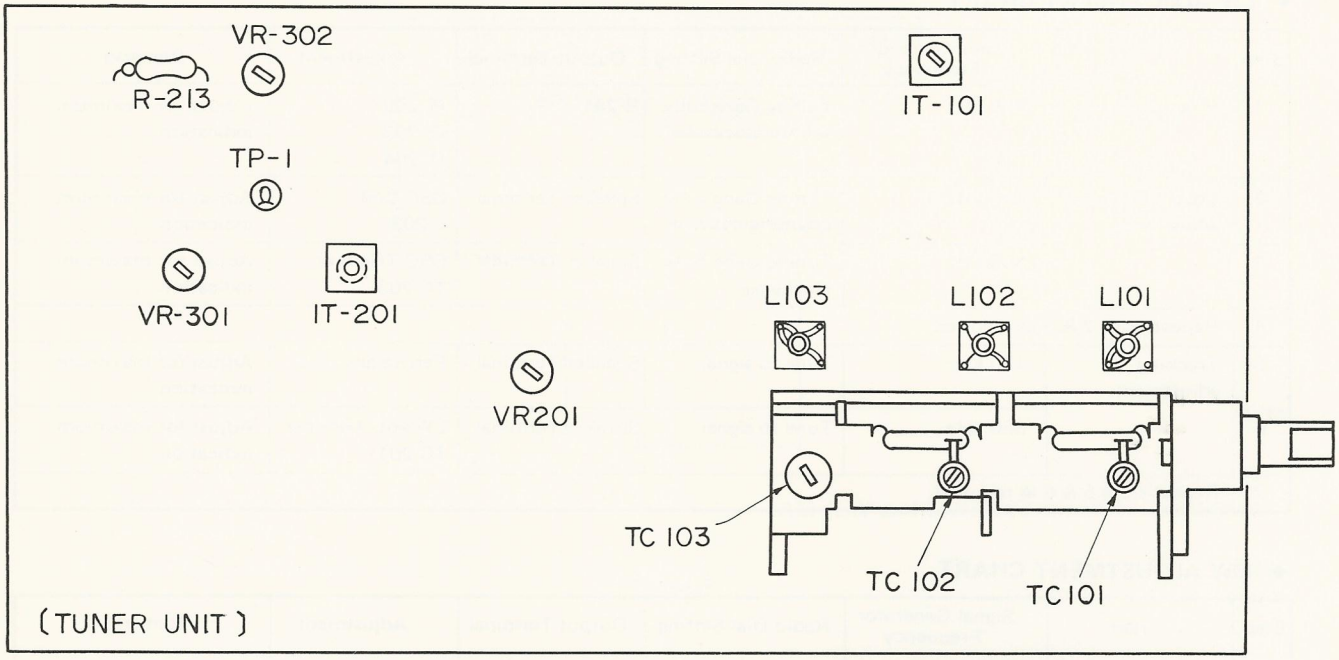

Figure 5. Tuner block for FM adjustment

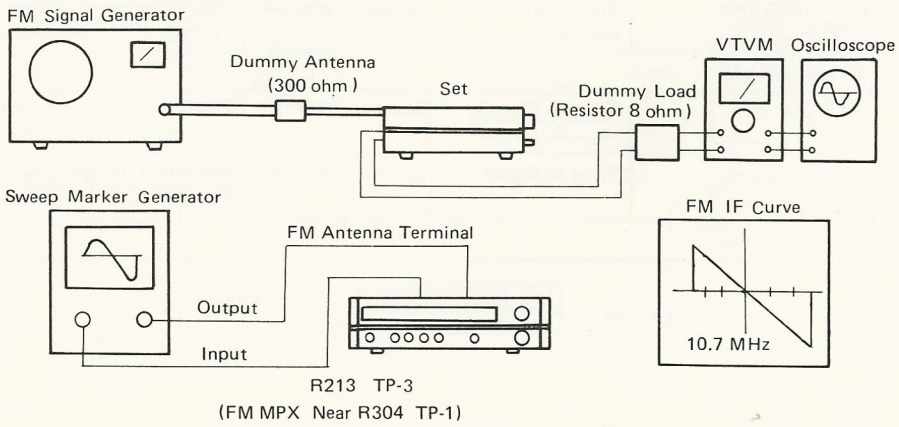

Figure 6.

5-4 AM (LW and MW) ADJUSTMENT

- **Test Equipments and Tools Required.**

· Signal generator with a frequency range at least from 40 kHz to 23 MHz (AM).
· Sweep marker generator.
· Osilloscope with a wide range amplifier of approximately 100 kHz.
· VTVM.
· Dummy load resistor. (8 ohm).
· Test loop antenna.

- **AM ADJUSTMENT**

1. Turn on the AM signal generator and the VTVM allowing a fifteen-minute warm-up period.
2. Connect the VTVM across the voice coil or an 8 ohm dummy load.
3. Set signal generator frequency as listed in AM ADJUSTMENT CHART and maintain a sufficient output level to provide an indication on VTVM.
4. Set volume control to mid-position.
5. Proceed as outlined in the AM ADJUSTMENT CHART.

- **LW ADJUSTMENT CHART**

Step	Item	Signal Generator Frequency	Radio Dial Setting	Output Terminal	Adjustment	Remarks
1	IF adjustment	455 kHz	Tuning Gang fully counterclockwise	R-241	IT-202 IT-203 IT-204	Adjust for maximum indication.
2	Local oscillation adjustment	145 kHz	Tuning Gang fully counterclockwise	Speaker Terminal	OSC Coil L-203	Adjust for maximum indication.
3		360 kHz	Tuning Gang fully clockwise	Speaker Terminal	OSC Trimmer TC-203	Adjust for maximum indication.
4	Repeat steps 2 & 3 as required.					
5	Tracking adjustment	150 kHz	Tune to signal	Speaker Terminal	Ferrite ant. Coil	Adjust for maximum indication.
6		350 kHz	Tune to signal	Speaker Terminal	LW ant. Trimmer TC-201	Adjust for maximum indication.
7	Repeat steps 5 & 6 as required.					

- **MW ADJUSTMENT CHART**

Step	Item	Signal Generator Frequency	Radio Dial Setting	Output Terminal	Adjustment	Remarks
1	Local oscillation adjustment	515 kHz	Tuning Gang fully counterclockwise	Speaker Terminal	OSC coil L-204	Adjust for maximum indication.
2		1650 kHz	Tuning Gang fully clockwise	Speaker Terminal	OSC Trimmer TC-204	Adjust for maximum indication.
3	Repeat steps 2 & 3 as required.					
4	Tracking adjustment	600 kHz	Tune to Signal	Speaker Terminal	Ferrite ant. coil	Adjust for maximum indication.
5		1400 kHz	Tune to Signal	Speaker Terminal	MW ant. Trimmer TC-202	Adjust for maximum indication.
6	Repeat steps 4 & 5 as required.					

* IF adjustment of MW is common to LW.

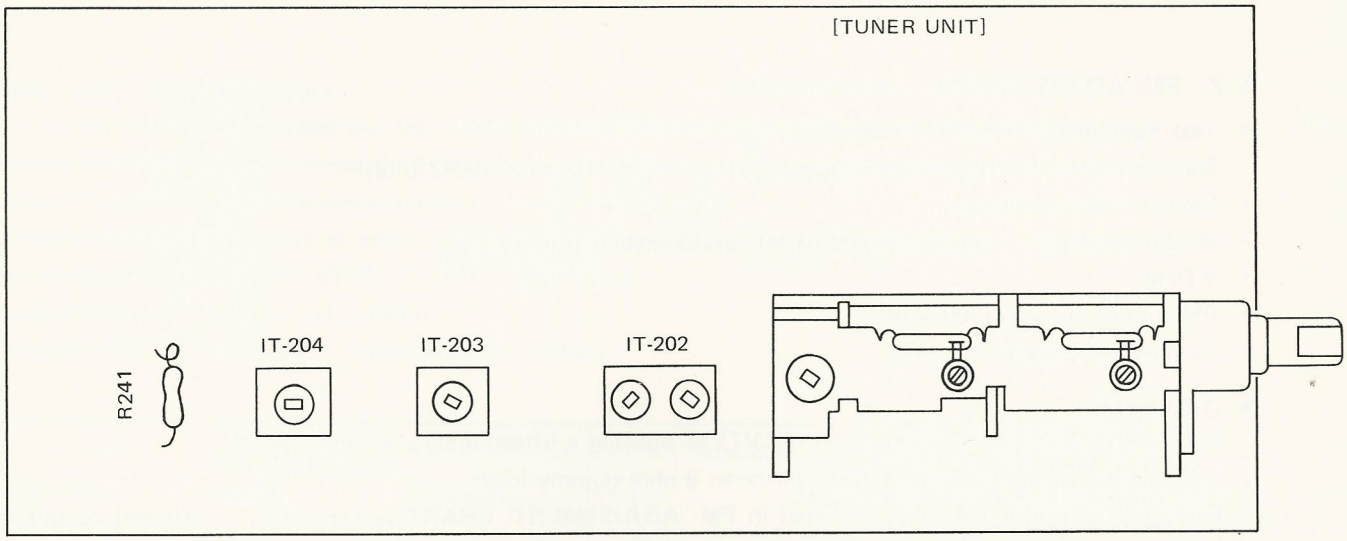

Tuner block for AM (LW and MW) IF adjustment

Figure 7.

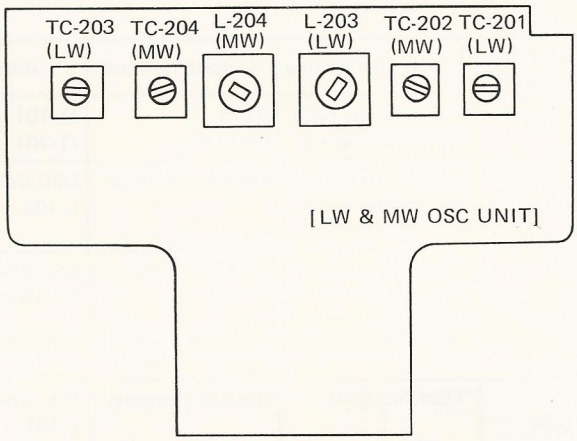

AM (LW and MW) OSC block for adjustment

Figure 8.

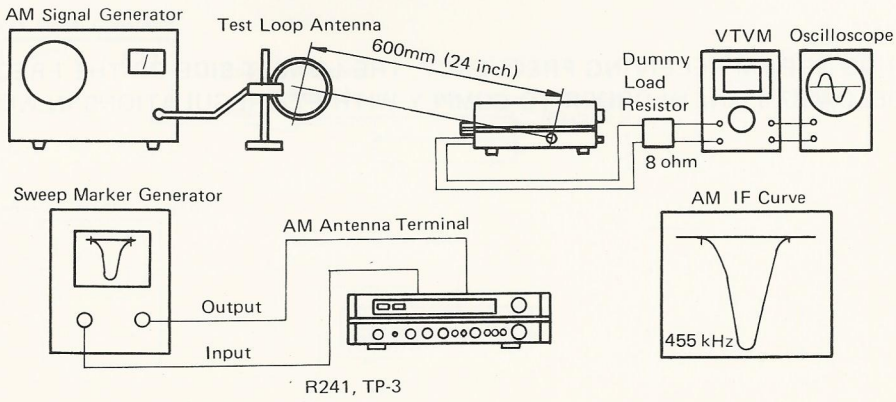

Figure 9.

6. SEMICONDUCTOR BASE DIAGRAMS

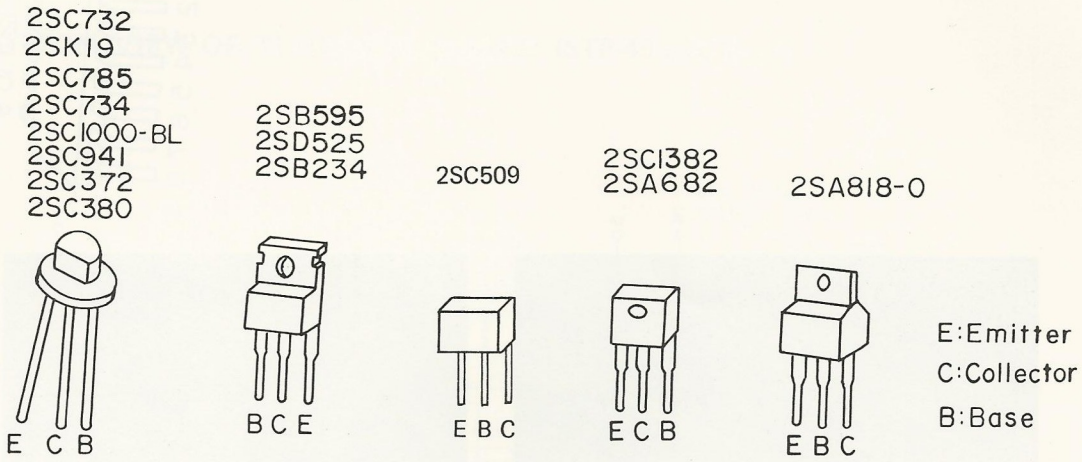

7. INTEGRATED CIRCUIT DIAGRAMS

IC TA7122AP

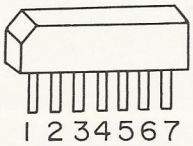

TA7122AP SCHEMATIC DIAGRAM

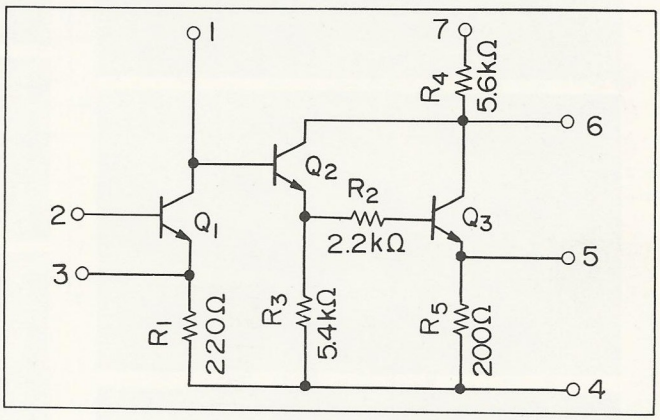

IC LA1230

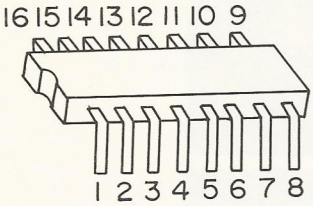

LA1230 BLOCK DIAGRAM

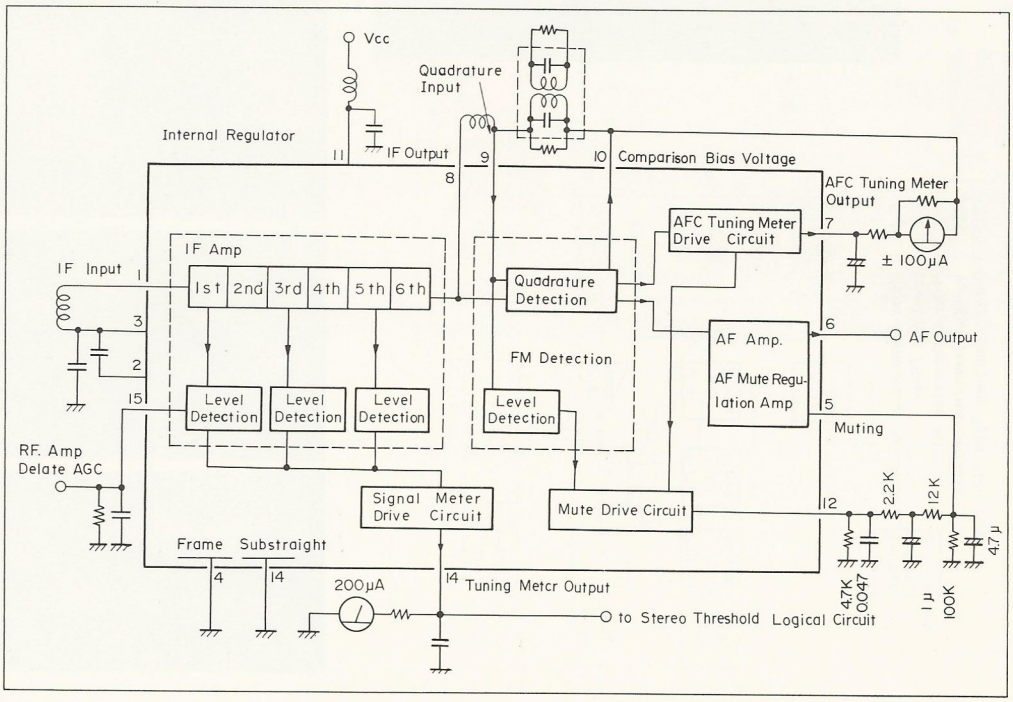

8. ELECTRICAL PARTS LOCATION

8-1 BOTTOM VIEW OF CONTROL P.C. BOARD (AF-114B-UNIT)

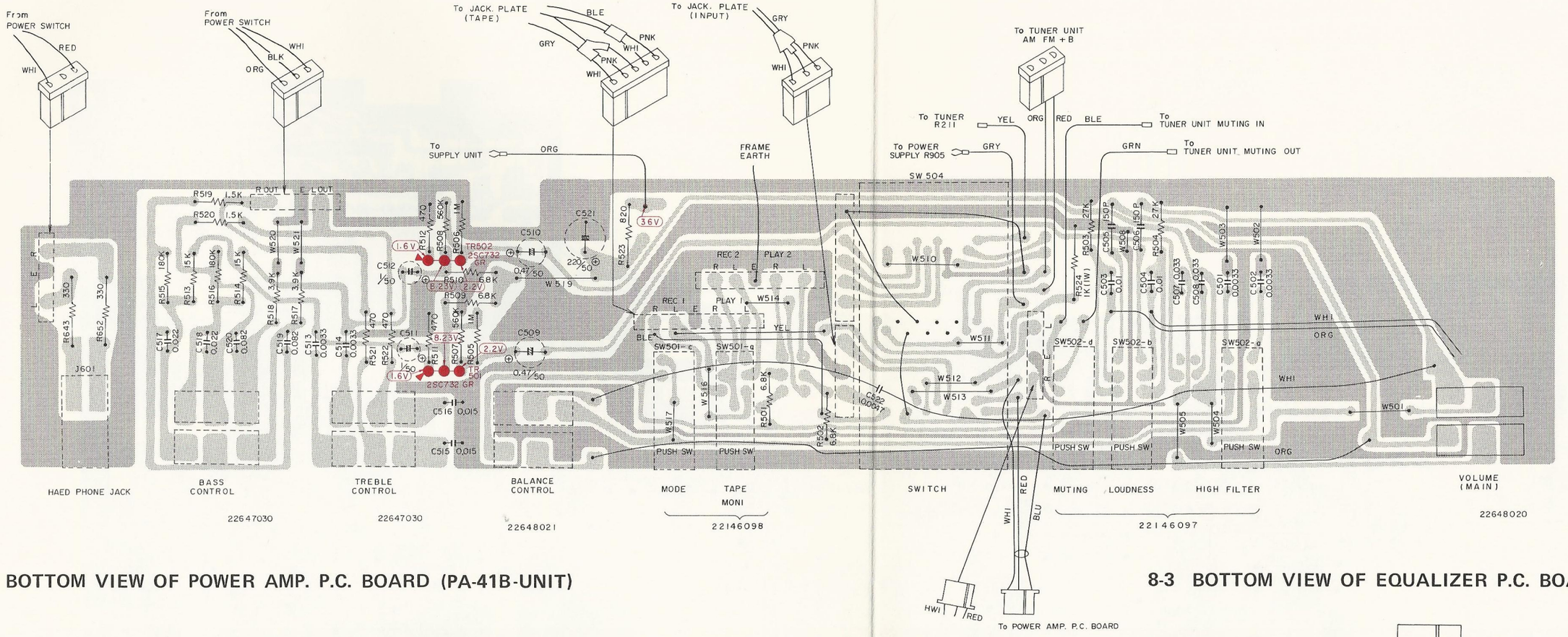

8-2 BOTTOM VIEW OF POWER AMP. P.C. BOARD (PA-41B-UNIT)

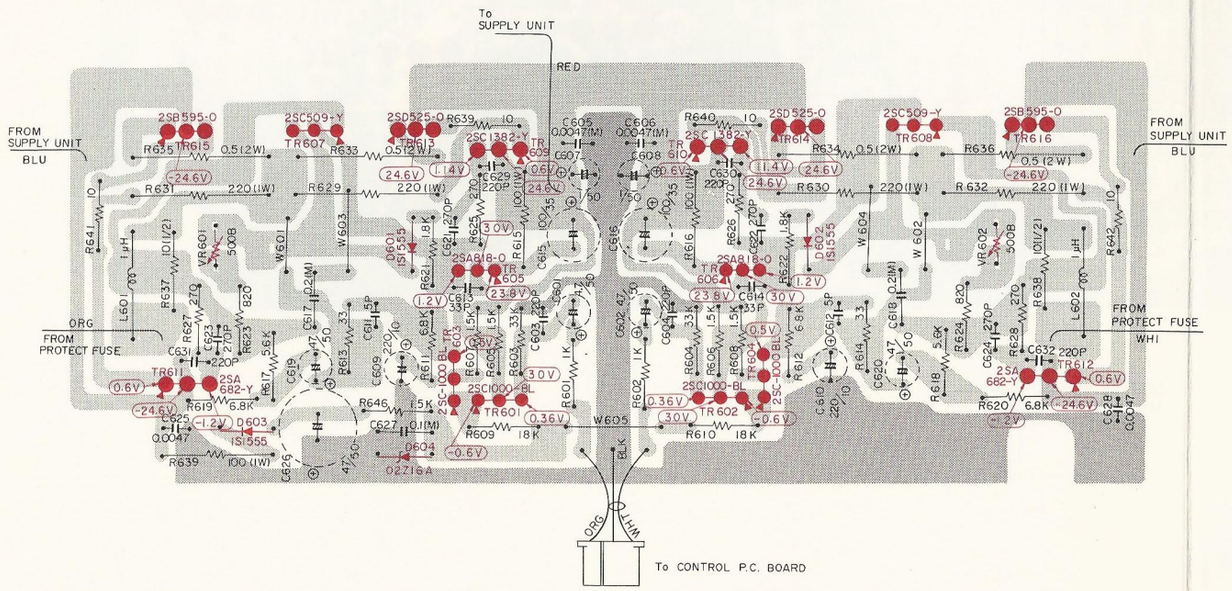

8-3 BOTTOM VIEW OF EQUALIZER P.C. BOARD (AF-118-UNIT)

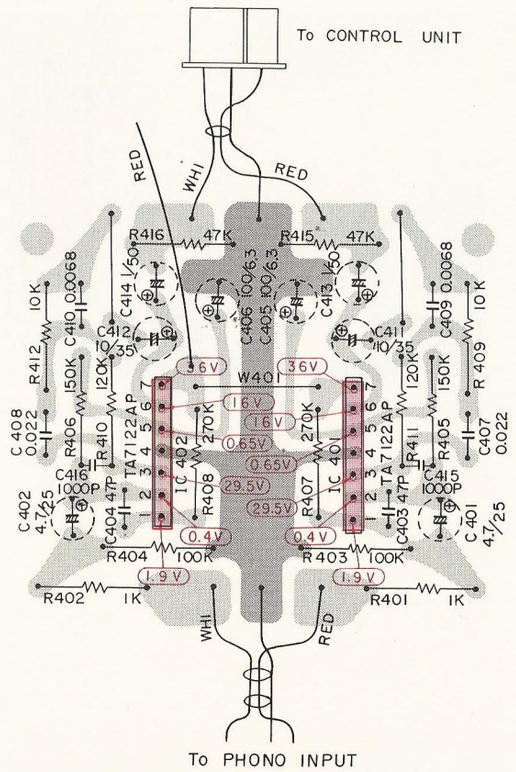

8-4 BOTTOM VIEW OF TUNER P.C. BOARD (STP-49-UNIT)

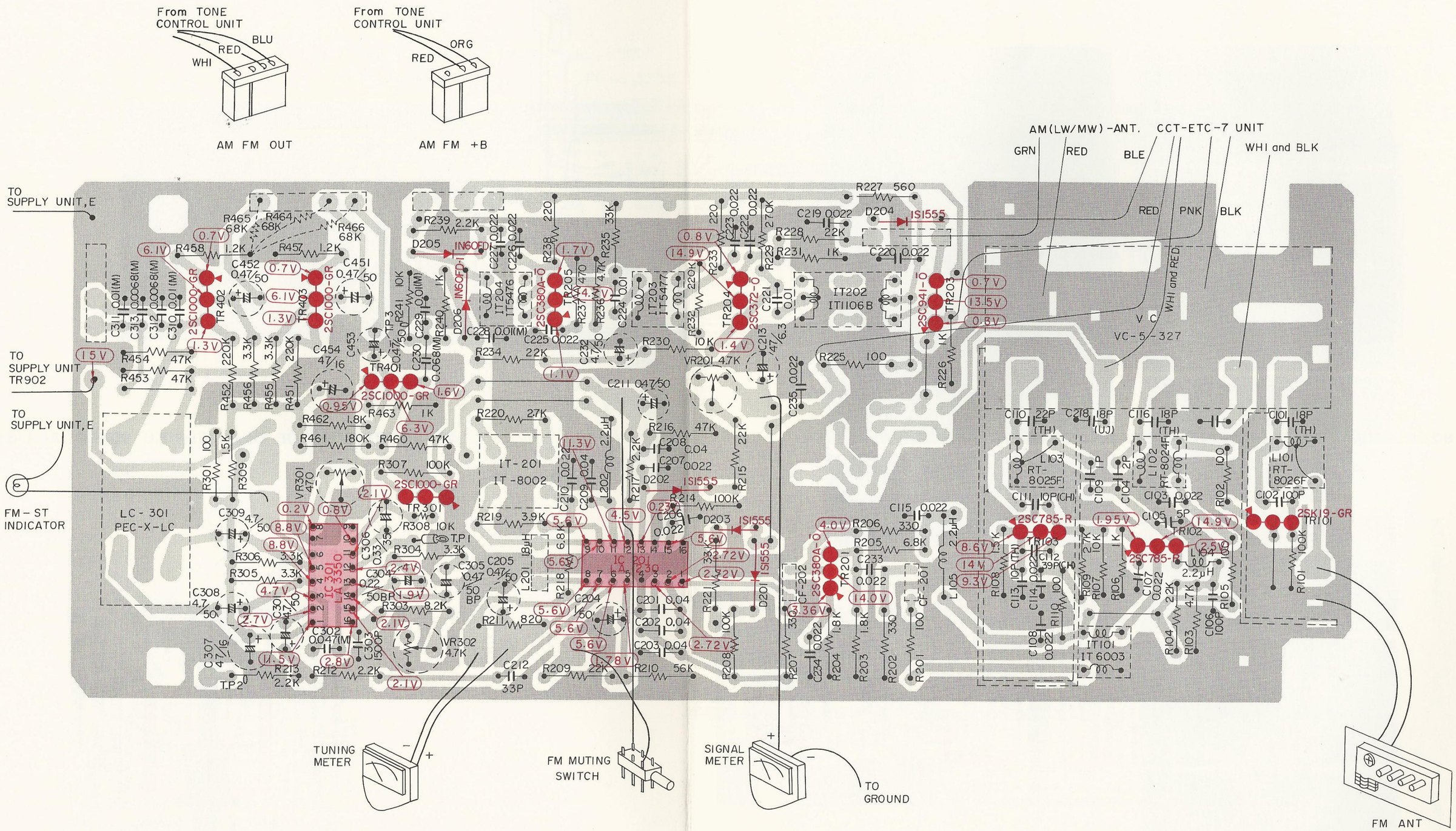

9. SCHEMATIC DIAGRAM

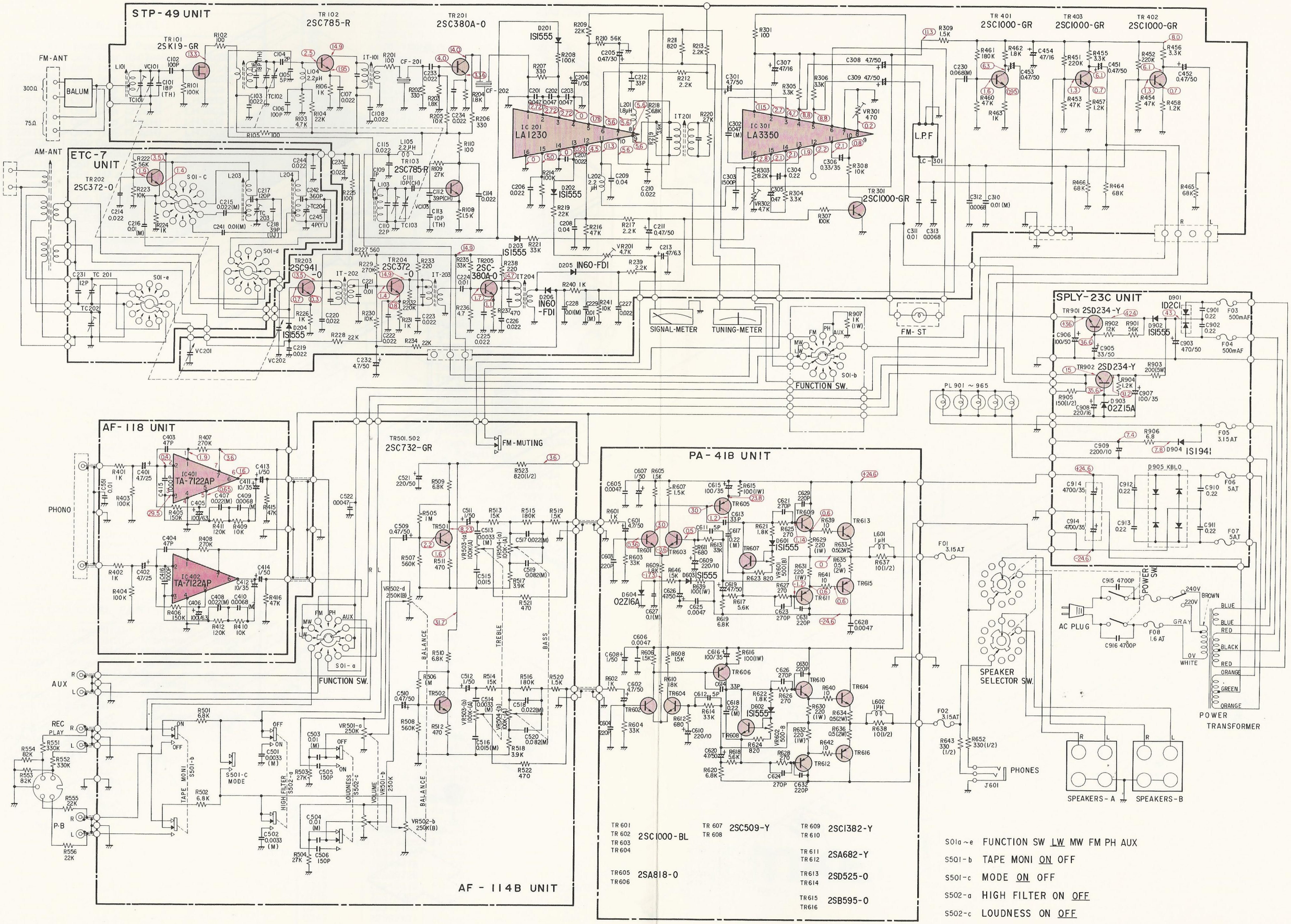

10. EXPLODED VIEW

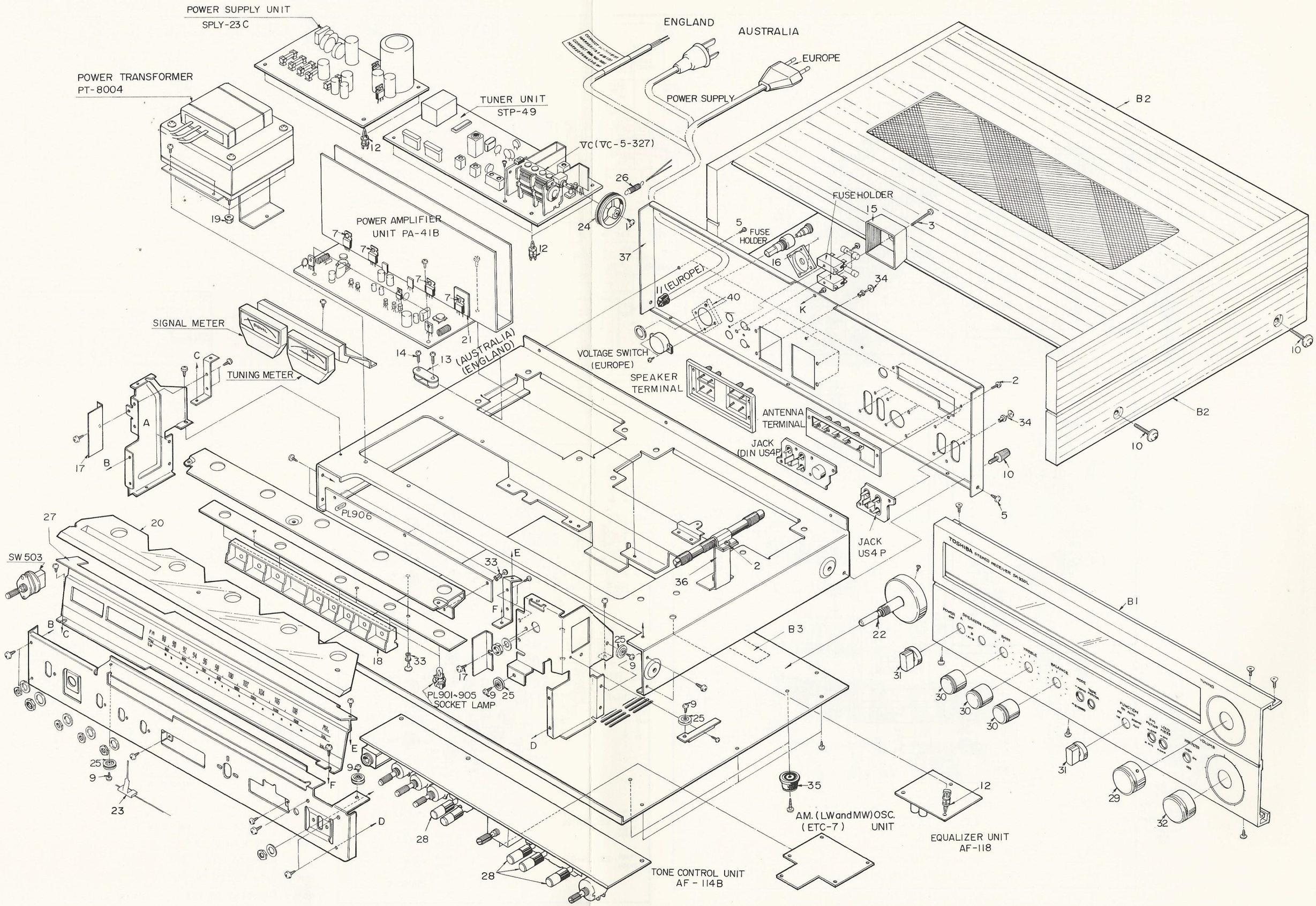

11. PARTS LIST

Symbol No.	Part No.	Description
ELECTRICAL PARTS		
PT-8004	22216290	Transformer, Power
L101	22292073	Coil, Trap (0.07μH) RT-8026F
L102	22294294	Coil, Trap (0.08μH) RT-8024F
L103	22295049	Coil, Trap (0.055μH) RT-8025F
L104	22291082	Coil, Trap (2.2μH) LH3003
L105	22291082	Coil, Trap (2.2μH) LH3003
L106	22291082	Coil, Trap (2.2μH) LH3003
L201	22291083	Coil, Trap (1.8μH) LH3004
L202	22291082	Coil, Trap (2.2μH) LH3003
L203	22285212	Coil, Oscillator RT-7008
L204	22245206	Coil, Oscillator RT-7111
L601,602	22211193	Coil, Trap (1μH) LH-4001
	22290002	Coil, FM Antenna LH-9050
IT101	22265681	Coil, IFT IT-6003
IT201	22267327	Coil, IFT IT-8002
IT202	22264643	Coil, IFT IT-1106B
IT203	22264626	Coil, IFT IT-5477
IT204	22266308	Coil, IFT IT-5476
	22242612	Coil, Antenna
LC301	22135017	Low Pass Filter
CF201,202	22153023	Ceramic Filter
TC201	22309135	Film Trimmer Capacitor
TC202	22309135	Film Trimmer Capacitor
TC203	22309135	Film Trimmer Capacitor
TC204	22309135	Film Trimmer Capacitor
PL901,902 903,904 905	22113377	Lamp, Illumination
PL906	22113383	Lamp, Indicator (FM-ST)
E1	22104298	Tuning Meter
E2	22104306	Signal Meter
	22144171	Fuse, (500mA.F) (SEMKO)
	22144283	Fuse, (3.15A.T) (SEMKO)
	22144285	Fuse, (5A.T) (SEMKO)
	22144293	Fuse, (1.6A.T) (SEMKO)
S501	22146098	Push Switch
S502	22146097	Push Switch
S503	22146096	Rotary Switch, Power (SEMKO)
S504	22146106	Rotary Switch, Function
	22146087	Voltage Switch (SEMKO)
E7	22162339	Speaker Terminal
E8	22162402	Antenna Terminal
E9	22165074	Fuse Holder (SEMKO)
E10	22165075	Fuse Holder (SEMKO)
E11	22116092	Socket Lamp
E12	22176286	Power Supply Cord (EUROPE)
E13	22176155	Power Supply Cord (AUSTRALIA)
E14	22176536	Power Supply Cord (ENGLAND)
J601	22163313	Headphone Jack
J602	22163443	Jack (US-4P)
J663	22163445	Jack (DIN US-4P)
MECHANICAL PARTS		
1	70402608	Screw (BID), M2.6x8mm
2	70403006	Screw (BID), M3x6mm Black
3	70403025	Screw (BID), M3x25mm Black
4	70403030	Screw (PAN), M3x30mm
5	71233006	Screw (BID, Tapping) M3x6mm Black
6	20794089	Screw (APN), M3x8mm Plastic
7	20794109	Screw (BRA, Tapping), M3x16mm Black
8	20794119	Screw (BRA, Tapping), M3x10mm
9	20794141	Screw (PAN), M4x20mm Black
10	22162338	Earth Terminal
11	25845524	Cord Bushing (EUROPE)
12	20022049	PCB Holder
13	22184117	Cord Clamp (AUSTRALIA)(ENGLAND)
14	71233016	Screw (BID) M3 x 16mm
15	20031040	Cover Fuse
16	20031041	Cover, Valtage Switch
17	20031042	Cover, Dial Scale
18	20031044	Cover Lamp
19	20796032	Nut, M4
20	20033074	Reflector
21	22118183	Insulator
22	20041051	Tuning Shaft Ass'y
23	20041052	Pointer Ass'y
24	20042057	Drum
25	20042058	Pulley
26	20866009	Tension Spring

Symbol No.	Part No.	Description
27	20071050	Dial Scale Ass'y
28	22824175	Knob Ass'y
29	20871241	Knob, Tuning
30	22826124	Knob, Tone
31	22826125	Knob, Selector
32	22826123	Knob, Volume
33	22705020	Plastic Rivet (3x4.5)
34	22705022	Plastic Rivet (3x5.5)
35	20842034	Leg Ass'y
36	20022052	Bracket Antenna
37	20015106	Jack Plate
38	25858299	Cushion
CABINET PARTS		
B1	20017100	Panel Ass'y
B2	20815138	Cabinet Ass'y
B3	22950592	Caution Label
ACCESSORIES		
	20951904	Instruction Book
	22124223	FM Antenna
CCT-STP-49 UNIT TRANSISTORS, IC'S AND DIODES		
TR101		Transistor, 2SK19-GR
TR102		Transistor, 2SC785-R
TR103		Transistor, 2SC785-R
TR201		Transistor, 2SC380A-O
TR203		Transistor, 2SC941-O
TR204		Transistor, 2SC372-O
TR205		Transistor, 2SC380A-O
TR301		Transistor, 2SC1000-GR
TR401		Transistor, 2SC1000-GR
TR402,403		Transistor, 2SC1000-GR
IC201	22114443	Integrated Circuit, LA1230
IC301	22114416	Integrated Circuit, LA3350
D201		Diode, 1S1555V-JA
D202		Diode, 1S1555V-JA
D203		Diode, 1S1555V-JA
D204		Diode, 1S1555V-JA
D205		Diode, 1N60FD-1
D206		Diode, 1N60FD-1
CAPACITORS J=±5%, K=±10%, M=±20%, Z=–20 +80%, P=–0 +100%, D=±0.5pF		
C101	22360261	Ceramic, 18pF, 50WV TH
C102	22362101	Ceramic, 100pF, 50WV K
C103	22341223	Ceramic, 0.022mfd, 50WV P
C104	22361209	Ceramic, 2pF, 50WV D
C105	22361509	Ceramic, 5pF, 50WV D
C106	22362101	Ceramic, 100pF, 50WV K
C107	22341223	Ceramic, 0.022mfd, 50WV P
C108	22341223	Ceramic, 0.022mfd, 50WV P
C109	22361109	Ceramic, 1pF, 50WV D
C110	22360263	Ceramic, 22pF, 50WV TH
C111	22360207	Ceramic, 10pF, 50WV CH
C112	22360137	Ceramic, 39pF, 50WV CH
C113	22360208	Ceramic, 10pF 50WV TH
C114	22341223	Ceramic, 0.022mfd, 50WV P
C115	22341223	Ceramic, 0.022mfd, 50WV P
C116	22360261	Ceramic, 18pF, 50WV TH
C201	22341403	Ceramic, 0.04mfd, 50WV P
C202	22341403	Ceramic, 0.04mfd, 50WV P
C203	22341403	Ceramic, 0.04mfd, 50WV P
C204	22448109	Electrolytic, 1mfd, 50WV P
C205	22448478	Electrolytic, 0.47mfd, 50WV P
C206	22341223	Ceramic, 0.022mfd, 50WV P
C207	22341223	Ceramic, 0.022mfd, 50WV P
C208	22341403	Ceramic, 0.04mfd, 50WV P
C209	22341403	Ceramic, 0.04mfd, 50WV P
C210	22341223	Ceramic, 0.022mfd, 50WV P
C211	22448478	Electrolytic, 0.47mfd, 50WV P
C212	22360226	Ceramic, 33pF 50WV K
C213	22442470	Electrolytic, 47mfd, 6.3WV P
C215	22373223	Mylar, 0.022mfd, 50WV M
C216	22373103	Mylar, 0.01mfd, 50WV M
C217	22362121	Ceramic, 120pF, 50WV K
C218	22360182	Ceramic, 39pF, 50WV K

Symbol No.	Part No.	Description
C219	22341223	Ceramic, 0.022mfd, 50WV P
C220	22341223	Ceramic, 0.022mfd, 50WV P
C221	22341103	Ceramic, 0.01mfd, 50WV P
C222	22341223	Ceramic, 0.022mfd, 50WV P
C223	22341223	Ceramic, 0.022mfd, 50WV P
C224	22341103	Ceramic, 0.01mfd, 50WV P
C225	22341223	Ceramic, 0.022mfd, 50WV P
C226	22341223	Ceramic, 0.022mfd, 50WV P
C227	22341223	Ceramic, 0.022mfd, 50WV P
C228	22373103	Mylar, 0.01mfd, 50WV M
C229	22373103	Mylar, 0.01mfd, 50WV M
C230	22373683	Mylar, 0.068mfd, 50WV M
C231	22362120	Ceramic, 12pF, 50WV K
C232	22448479	Electrolytic, 4.7mfd, 50WV P
C233	22341223	Ceramic, 0.022mfd, 50WV P
C234	22341223	Ceramic, 0.022mfd, 50WV P
C235	22341223	Ceramic, 0.022mfd, 50WV P
C301	22448479	Electrolytic, 4.7mfd, 50WV P
C302	22373473	Mylar, 0.047mfd, 50WV M
C303	22321059	Polystyrene, 1500pF, 50WV K
C304	22403053	Electrolytic, 0.22mfd, 50WV P
C305	22403054	Electrolytic, 0.47mfd, 50WV P
C306	22401022	Tantalum 0.33mfd, 35WV P
C307	22445470	Electrolytic, 47mfd, 16WV P
C308	22448479	Electrolytic, 4.7mfd, 50WV P
C309	22448479	Electrolytic, 4.7mfd, 50WV P
C310	22373103	Mylar, 0.01mfd, 50WV M
C311	22373103	Mylar, 0.01mfd, 50WV M
C312	22372682	Mylar, 0.0068mfd, 50WV K
C313	22372682	Mylar, 0.0068mfd, 50WV K
C451,452	22448478	Electrolytic, 0.47mfd, 50WV P
C453	22448478	Electrolytic, 0.47mfd, 50WV P
C454	22445470	Electrolytic, 47mfd, 16WV P
VC	22307102	Variable Condenser

RESISTORS

All resistors are ¼W, 5%, carbon film resistor unless otherwise noted.

R101	22545104	100K ohm
R102	22545101	100 ohm
R103	22545472	4.7K ohm
R104	22545223	22K ohm
R105	22545101	100 ohm
R106	22545102	1K ohm
R107	22545103	10K ohm
R108	22545152	1.5K ohm
R109	22545273	27K ohm
R110	22545101	100 ohm
R201	22545101	100 ohm
R202	22545331	330 ohm
R203	22545182	1.8K ohm
R204	22545182	1.8K ohm
R205	22545103	10K ohm
R206	22545331	330 ohm
R207	22545331	330 ohm
R208	22545104	100K ohm
R209	22545223	22K ohm
R210	22545563	56K ohm
R211	22545821	820 ohm
R212	22545222	2.2K ohm
R213	22545222	2.2K ohm
R214	22545104	100K ohm
R215	22545223	22K ohm
R216	22545473	47K ohm
R217	22545222	2.2K ohm
R218	22545682	6.8K ohm
R219	22545392	3.9K ohm
R220	22545272	2.7K ohm
R221	22545333	33K ohm
R225	22545101	100 ohm
R226	22545102	1K ohm
R227	22545561	560 ohm
R228	22545223	22K ohm
R229	22545274	270K ohm
R230	22545103	10K ohm
R231	22545102	1K ohm
R232	22545224	220K ohm
R233	22545221	220 ohm
R234	22545223	22K ohm
R235	22545333	33K ohm
R236	22545472	4.7K ohm
R237	22545471	470 ohm
R238	22545221	220 ohm
R239	22545222	2.2K ohm

Symbol No.	Part No.	Description
R240	22545102	1K ohm
R241	22545103	10K ohm
R301	22545101	100 ohm
R303	22545822	8.2K ohm
R304	22545332	3.3K ohm
R305	22545332	3.3K ohm
R306	22545332	3.3K ohm
R307	22545104	100K ohm
R308	22545103	10K ohm
R309	22545152	1.5K ohm
R451,452	22545224	220K ohm
R453,454	22545473	47K ohm
R455,456	22545332	3.3K ohm
R457,458	22545122	1.2K ohm
R460	22545473	47K ohm
R461	22545184	180K ohm
R462	22545182	1.8K ohm
R463	22545102	1K ohm
R464	22545683	68K ohm
R465	22545683	68K ohm
R466	22545683	68K ohm
VR201	22658318	4.7K ohm Semi-fixed.
VR301	22658260	470 ohm Semi-fixed.
VR302	22658318	4.7K ohm Semi-fixed.

CCT-ETC-7 UNIT

TRANSISTOR

TR202		Transistor 2SC372-O

CAPACITORS

J=±5%, K=±10%, M=±20%, Z=–20 +80%, P=–0 +100%, D=±0.5pF

C214	22341223	Ceramic, 0.022mfd, 50WV P
C215	22373223	Mylar, 0.022mfd, 50WV M
C216	22373103	Mylar, 0.01mfd, 50WV M
C217	22362121	Ceramic, 120pF 50WV K
C218	22360182	Ceramic, 39pF 50WV K
C231	22362120	Ceramic, 12pF 50WV K
C241	22373103	Mylar, 0.01mfd, 50WV M
C242	22321016	Mylar, 360pF 50WV J
C244	22341223	Ceramic, 0.022mfd, 50WV P
C245	22360291	Ceramic, 4pF 50WV K

RESISTORS

All resistors are ¼W, 5%, carbon film resistor unless otherwise noted.

R222	22545563	56K ohm
R223	22545103	10K ohm
R224	22545102	1K ohm

CCT-AF-118 UNIT

IC

IC401,402		Integrated Circuit, TA-7122AP

CAPACITORS

J=±5%, K=±10%, M=±20%, Z=–20 +80%, P=–0 +100%, D=±0.5pF

C401,402	22446479	Electrolytic, 4.7mfd, 25WV P
C403,404	22362470	Ceramic, 47pF, 50WV K
C405,406	22442101	Electrolytic, 100mfd, 6.3WV P
C407,408	22372223	Mylar, 0.022mfd, 50WV K
C409,410	22372682	Mylar, 0.0068mfd, 50WV K
C411,412	22447100	Electrolytic, 10mfd, 35WV P
C413,414	22448109	Electrolytic, 1mfd, 50WV P
C415,416	22341102	Ceramic, 1000pF 50WV P

RESISTORS

All resistors are ¼W, 5% carbon film resistor unless otherwise noted.

R401,402	22545102	1K ohm
R403,404	22545104	100K ohm
R405,406	22545154	150K ohm
R407,408	22545274	270K ohm
R409,410	22545103	10K ohm
R411,412	22545124	120K ohm
R413,414	22545821	820 ohm
R415,416	22545473	47K ohm