Clarion

SERVICE MANUAL

Closer Relations through "CLARION SERVICE MANUAL"

MODEL RU-345A RE-345A

Fabricant: CLARION CO., LTD./Exportations: CLARION SHOJI CO., LTD.
3, Kojimachi 5-chome, Chiyoda-ku, Tokyo, 102 Japan Tel.: (265) 2931 Telex: J22908, J22152 CLARISHO
Succursales outre-mer:
CLARION SHOJI (EUROPA) G.M.B.H. 2000 Hamburg 76, Schöne Aussicht 35, West Germany. Tel.: 220-7667 Telex: 41214969
CLARION SHOJI CO., LTD. (U.S.A.) 5500 Rosecrans Ave., Lawndale, Calif., 90260 U.S.A. Tel.: 213-973-1100 Telex: 66-4447
CLARION CORPORATION OF AMERICA 5500 Rosecrans Ave., Lawndale, Calif., 90260 U.S.A. Tel.: 213-973-1100 Telex: 66-4447
CLARION CORPORATION OF AMERICA, EASTERN DIVISION 421 North Midland Ave., Saddle Brook, N.J. 07662 U.S.A. Tel.: 201-791-1200 Telex: 13805
CLARION (MALAYSIA) SDN. BHD. 9 1/2 m.s. Bayan Lepas, Penang, Malaysia Tel.: 897-206, 897-334 Telex: PG 255 (Penang)
CLARION DO BRASIL INDUSTRIA E COMERCIO LTDA. Caixa Postal 5033, Sao Paulo, Brasil Tel.: 32-5161 Telex: 3821123
CLARION (HONG KONG) CO., LTD. 225 Ping Chau Gallery, Ocean Terminal, Kowloon, H.K. Tel.: 3-675785 Telex: HK4922

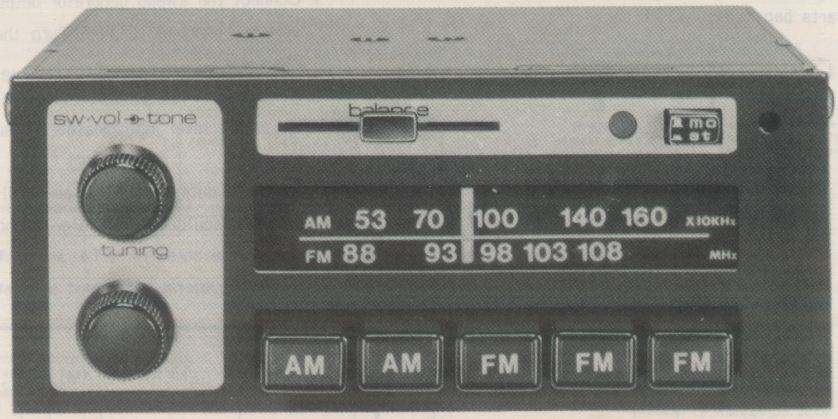

RU-345A

* SPECIFICATIONS

Circuit system:	Superheterodyne			
Tuning system:	Manual μ-tuning 5-push button system			
Receive range:	AM	530~1605KHz		
	FM	88~108MHz		
Intermediate frequency:	AM	262.5KHz		
	FM	10.7MHz		
Maximum sensitivity:	AM	Less than 20dB		
	FM	Less than 15dB		
Quieting sensitivity:	AM	Less than 30dB (at S/N20dB)		
	FM	Less than 20dB (at S/N30dB)		
Image rejection ratio:	AM	More than 50dB		
	FM	More than 40dB		
IF rejection ratio:	AM	More than 50dB		
	FM	More than 55dB		
AFC:	FM	300~600KHz		
Limiter sensitivity:	FM	Less than 30dB		
½IF rejection ratio:	FM	More than 70dB		
AGC F.O.M:	AM	More than 40dB		
Selectivity:	AM	More than 20dB (at ±10KHz detune)		
Indicator sensitivity:	FM	Less than 30dB		
Separation:	FM	More than 20dB (400Hz)		
Electrical fidelity:	AM	100Hz	H	+2±3dB
			L	+6±3dB
		4000Hz	H	−15±5dB
			L	−27±5dB
	FM	100Hz	H	+2±3dB
			L	+4±3dB
		7000Hz	H	−15±5dB
			L	−30±5dB
Load impedance:	4 Ω			
Power output:	More than 4W×2 (for 10% distortion)			
	More than 6W×2 (for max. volume)			
Power supply voltage:	DC. 13.2V Negative ground			
Dimensions:	Width 140m/m			
	Height 58m/m			
	Depth 135m/m			
Weight:	1.03kg			

Semiconductors:

FM	RF amplifier	2SC1342	× 1
	Frequency mixer	2SC461B	× 1
	Local oscillator	2SC461B	× 1
	AFC	001-0130-00 (1S2790WT)	×1
	IF amplifier	2SC460B	× 4
	Detector	001-0020-00 (1N60)	×2
	Pre amplifier	2SC460B	× 1
	MPX	051-0050-00,01 (HA-1156)	×1
AM	RF amplifier	2SC460B	× 1
	Frequency converter	2SC454B	× 1
	IF amplifier	2SC460B	× 1
	Detector	001-0095-00 (1S2076)	×1
	AGC	001-0010-00 (1N34A)	×1
	Audio output amplifier	051-0036-01,02 (HA-1322)	×2
	Voltage regulator	001-0099-01 (HZ-7B)	×1

Printed in Japan 298-1769-00

Clarion

SERVICE MANUAL

Closer Relations through "CLARION SERVICE MANUAL"

MODEL RU-345A RE-345A

Fabricant: **CLARION CO., LTD.**/Exportations: **CLARION SHOJI CO., LTD.**

3, Kojimachi 5-chome, Chiyoda-ku, Tokyo, 102 Japan Tel.: (265) 2931 Telex: J22908, J22152 CLARISHO

Succursales outre-mer:

CLARION SHOJI (EUROPA) G.M.B.H. 2000 Hamburg 76, Schöne Aussicht 35, West Germany. Tel.: 220-7667 Telex: 41214969

CLARION SHOJI CO., LTD. (U.S.A.) 5500 Rosecrans Ave., Lawndale, Calif., 90260 U.S.A. Tel.: 213-973-1100 Telex: 66-4447

CLARION CORPORATION OF AMERICA 5500 Rosecrans Ave., Lawndale, Calif., 90260 U.S.A. Tel.: 213-973-1100 Telex: 66-4447

CLARION CORPORATION OF AMERICA, EASTERN DIVISION 421 North Midland Ave., Saddle Brook, N.J. 07662 U.S.A. Tel.: 201-791-1200 Telex: 13805

CLARION (MALAYSIA) SDN. BHD. 9 1/2 m.s. Bayan Lepas, Penang, Malaysia Tel.: 897-206, 897-334 Telex: PG 255 (Penang)

CLARION DO BRASIL INDUSTRIA E COMERCIO LTDA. Caixa Postal 5033, Sao Paulo, Brasil Tel.: 32-5161 Telex: 3821123

CLARION (HONG KONG) CO., LTD. 225 Ping Chau Gallery, Ocean Terminal, Kowloon, H.K. Tel.: 3-675785 Telex: HK4922

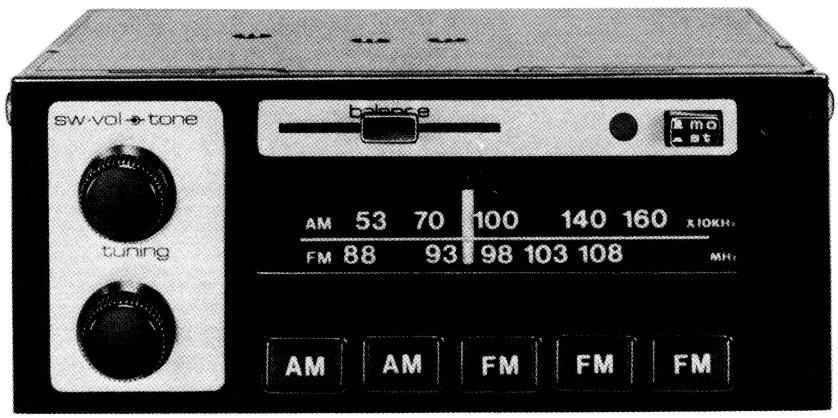

RU-345A

* SPECIFICATIONS

Circuit system:	Superheterodyne			
Tuning system:	Manual μ-tuning 5-push button system			
Receive range:	AM	530～1605KHz		
	FM	88～108MHz		
Intermediate frequency:	AM	262.5KHz		
	FM	10.7MHz		
Maximum sensitivity:	AM	Less than 20dB		
	FM	Less than 15dB		
Quieting sensitivity:	AM	Less than 30dB (at S/N20dB)		
	FM	Less than 20dB (at S/N30dB)		
Image rejection ratio:	AM	More than 50dB		
	FM	More than 40dB		
IF rejection ratio:	AM	More than 50dB		
	FM	More than 55dB		
AFC:	FM	300～600KHz		
Limiter sensitivity:	FM	Less than 30dB		
½IF rejection ratio:	FM	More than 70dB		
AGC F.O.M:	AM	More than 40dB		
Selectivity:	AM	More than 20dB (at ±10KHz detune)		
Indicator sensitivity:	FM	Less than 30dB		
Separation:	FM	More than 20dB (400Hz)		
Electrical fidelity:	AM	100Hz	H	+2±3dB
			L	+6±3dB
		4000Hz	H	−15±5dB
			L	−27±5dB
	FM	100Hz	H	+2±3dB
			L	+4±3dB
		7000Hz	H	−15±5dB
			L	−30±5dB
Load impedance:	4 Ω			
Power output:	More than 4W×2 (for 10% distortion)			
	More than 6W×2 (for max. volume)			
Power supply voltage:	DC. 13.2V Negative ground			
Dimensions:	Width 140m/m			
	Height 58m/m			
	Depth 135m/m			
Weight:	1.03kg			

Semiconductors:

FM	RF amplifier	2SC1342	× 1
	Frequency mixer	2SC461B	× 1
	Local oscillator	2SC461B	× 1
	AFC	001-0130-00 (1S2790WT)	×1
	IF amplifier	2SC460B	× 4
	Detector	001-0020-00 (1N60)	×2
	Pre amplifier	2SC460B	× 1
	MPX	051-0050-00,01 (HA-1156)	×1
AM	RF amplifier	2SC460B	× 1
	Frequency converter	2SC454B	× 1
	IF amplifier	2SC460B	× 1
	Detector	001-0095-00 (1S2076)	×1
	AGC	001-0010-00 (1N34A)	×1
	Audio output amplifier	051-0036-01,02 (HA-1322)	×2
	Voltage regulator	001-0099-01 (HZ-7B)	×1

Printed in Japan 298-1769-00

* COMPONENT VIEW :

	Main unit	1
284-2502-00	Installation	1
280-3307-00	Owner's guide	1
281-0240-01	Warranty card	1
SPA-386-000	Speaker assembly	2

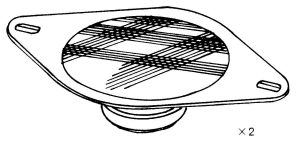

852-4540-01 Extention lead 1

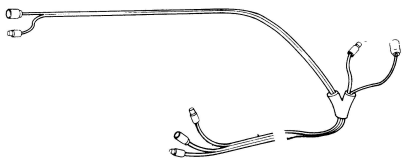

921-6201-00 Parts bag 1

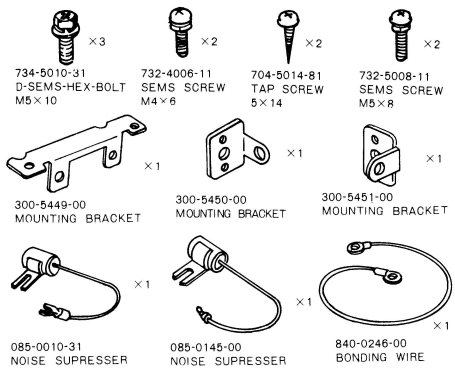

921-6203-00 Parts bag 1

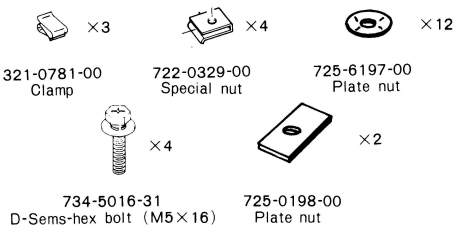

* DIFERENCE BETWEEN RE-345A AND PU-345

AM	53	70	100	140	160	x10KHz
FM	88	93	98	103	108	MHz

RU-345A

◐ AM	53	70	100	140	160	x10KHz
FM	88	93	98	103	108	MHz

RE-345A

*** Only the dial plate malked with ◐ is available as spear part.**

* FEATURES

- Employs strict noise eliminating measures.
- Designed to withstand extreme shocks and vibrations.
- Stable performance against changes in ambient temperature by using silicon transistors and MPX IC (P. L. L. type).
- Dynamic sound by using low-distortion, high-output power IC.
- Employs ST-MO switch.

* ADJUSTMENT METHODS:

1. Adjustment of AM tuner

1-1 Instruments required

AM standard signal generator (SSG)
AM IF sweep generator (262.5KHz)
Oscilloscope
Dummy load (4Ω)
VTVM
Dummy antenna (see below Fig. 2.)

1-2 Adjustment of IF Section

1. Connect the sweep generator output to D4 and oscilloscope's vertical terminal to TP5. Turn the tuning knob of the set fully clockwise.
2. When the sweep generator frequency is set to 262.5KHz and its output level is increased, a waveform as shown in Fig. 1 is obtained.
   Keep the output of SSG as small as possible and the vertical gain of oscilloscope as large as possible.
3. Adjust the cores of IFT4 and IFT5 fo obtain maximum height of the waveform with good symmetry.

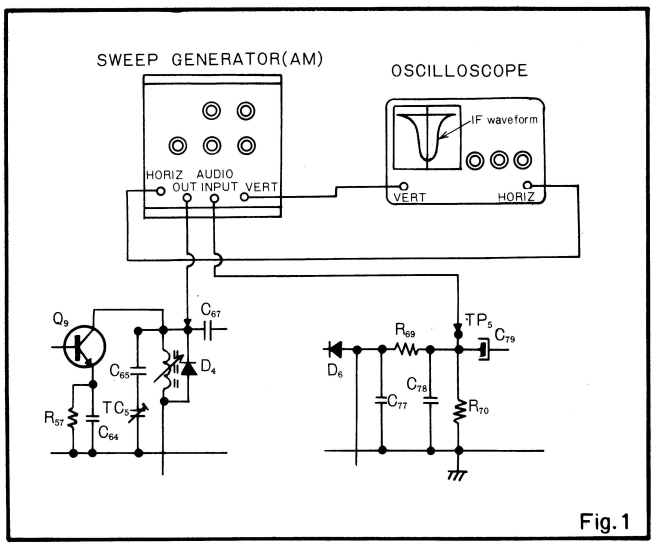

Fig. 1

1-3 Tracking adjustment

Apply the output of SSG to the set through dummy load.
Bring the set's dial pointer to the maximum frequency point on the dial and set the AM SG to 1620KHz.
Adjust the OSC trimmer (TC6) to receive 1620KHz.
Now adjust the ANT trimmer (TC4) and RF trimmer (TC5) on the same frequency so that the Audio output becomes maximum.
20~30dB output of SSG is suitable for the adjustment.
The volume and tone controls must be at maximum position.

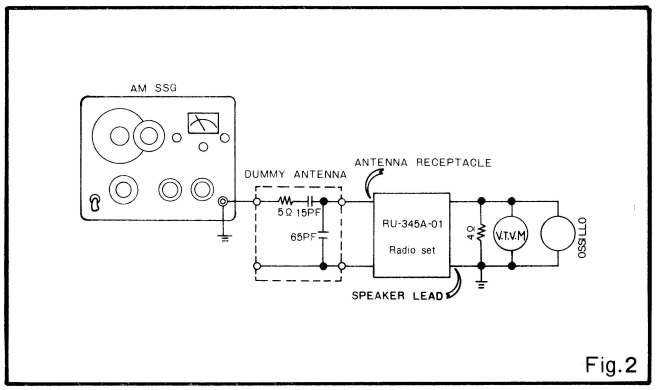

Fig.2

2. Adjustment of FM tuner

2-1 Instruments required

FM standard signal generator (SSG)

FM IF sweep generator (10.7MHz)

Oscilloscope

Dummy load

VTVM

2-2 Adjustment of IF section

1. Connect the sweep generator output to TP1 and oscilloscope's vertical terminal to TP2.
   Turn the tuning knob of the set fully clockwise.
2. With the sweep generator frequency set fo 10.7MHz when the output level of the sweep generator is gradually increased, waveform shown in Fig. 3 appears on the CRT screen.
   Now perform the following adjustment.
   Keep the FM SSG output as small as possible and the vertical gain of oscilloscope as large as possible.
3. Adjust the core (green) of IFT1 for maximum height of the waveform with good symmetry.
   Adjust the core (blue) of IFT3 for maximum height of the waveform.
4. Connect the vertical terminal of oscilloscope to TP3.
   Adjust the core (black) of IFT3 for good linearity and good symmetry of the S-curve.

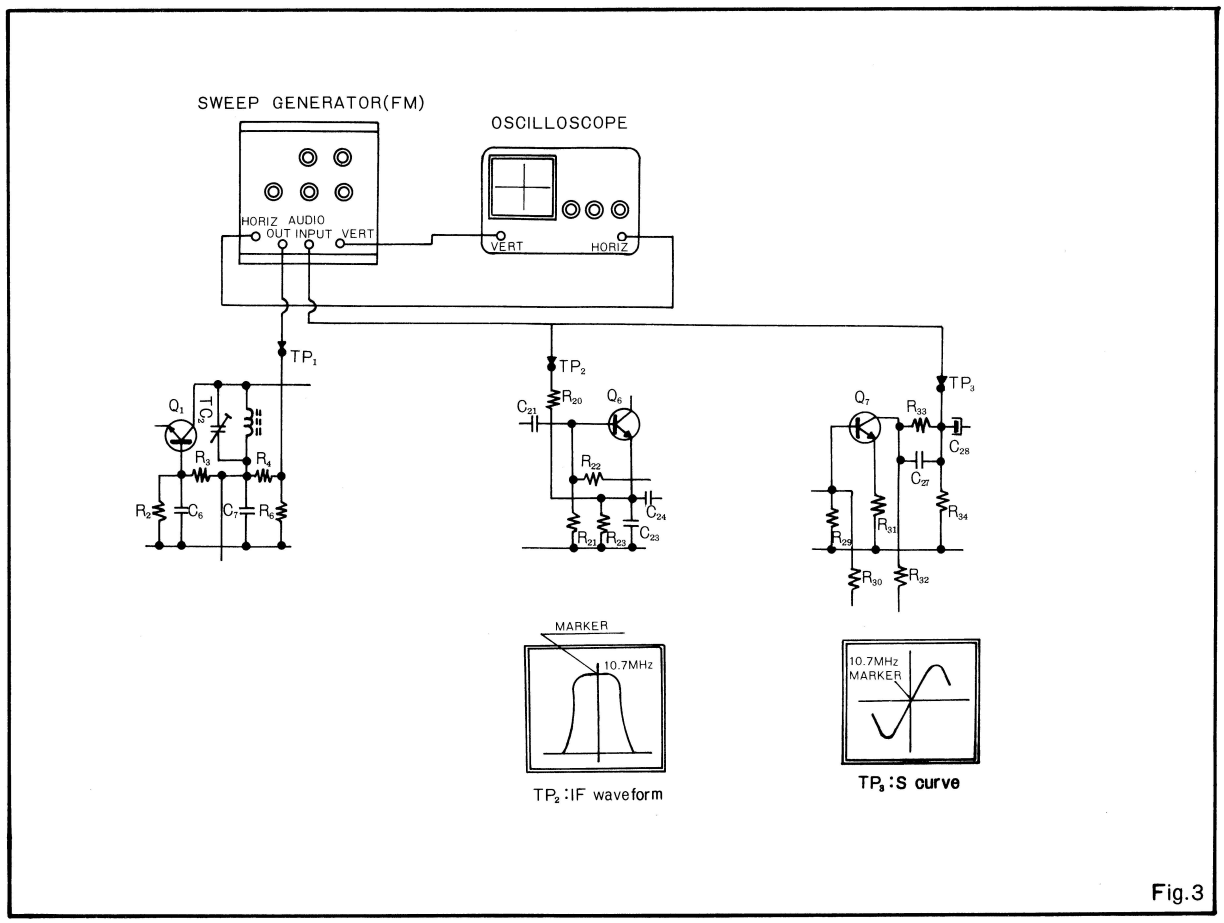

Fig.3

2-3 Tracking adjustment

1. Turn the tuning knob fully counterclockwise (lowest receiving frequency position).
   Adjust the OSC trimmer (TC3) to receive 87.5MHz from the FM SSG.
2. Turn the tuning knob to receive 98MHz. Set the output of FM SSG to approximately 15dB and adjust the ANT trimmer (TC1) and RF trimmer (TC2) to obtain maximum audio output.
   At this time, the volume control and tone control knobs must be at maximum position.

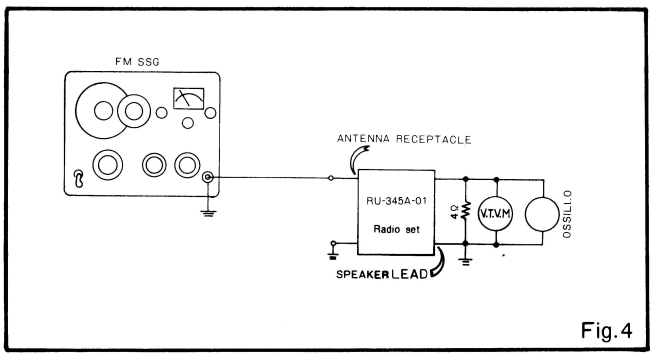

Fig.4

2-4 MPX section adjustment

1. Turn the ST-MO switch OFF. (Monoral reception).
   Connect the oscilloscope vertical input to TP. 4 and apply a pre-calibrated 19KHz signal (stereo modulator calibration use signal) to the horizontal input.
   Adjust the semi-fixed control VR2 so that the Lissajuous waveform becomes almost stationery.
   (If a frequency counter is available, connect it to TP. 4 and adjust VR2 so that the frequency becomes exactly 19.0KHz).
   -Adjustment of the frequency of voltage controlled oscillator(VCO)-
2. Connect the stereo modulator to FM SSG and set to the specified modulation depth (pilot signal 7.5KHz).
   Turn the ST-MO switch ON. (Stereo reception).
   Set the SSG output to about 25dB.
   Adjust the semi-fixed control VR1 by turning it in the counterclockwise direction to a position where the ST indicator lights.
   -Adjustment of Indicator lamp sensitivity-
3. This adjustment of lamp (lighting) sensitivity must be performed after the adjustment of VCO frequency. The sensitivity increases when VR1 is turned counterclockwise and increases when VR1 is turned to clockwise direction.

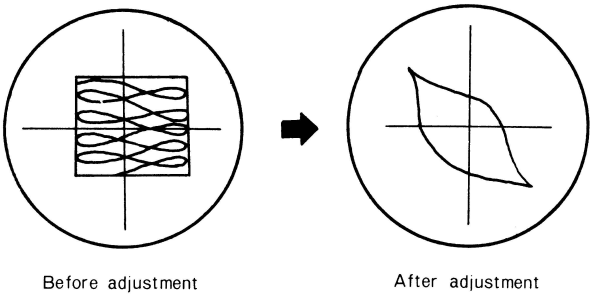

Fig.5

Docs not become perfectly round because the Lissajuous figure is formed by the rectangular waveform (TP. 4 output) and sinusoidal waveform (calibration use 19KHz signal).

ADJUSTMENT OF ANTENNA TRIMMER

Antenna trimmer must be adjusted in the following cases. It helps increasing the sensitivity.

- After installing or after repairing the set.
- When the antenna or the antenna cable is replaced.
- When the radio sensitivity is poor and noise is prominent.

Method of adjustment

Set the receiver VOL. control to max., TONE control to max., and the dial pointer to around 1400KHz to receive white noise (hissing noise) and adjust the antenna trimmer (screw) so that the noise output becomes maximum.

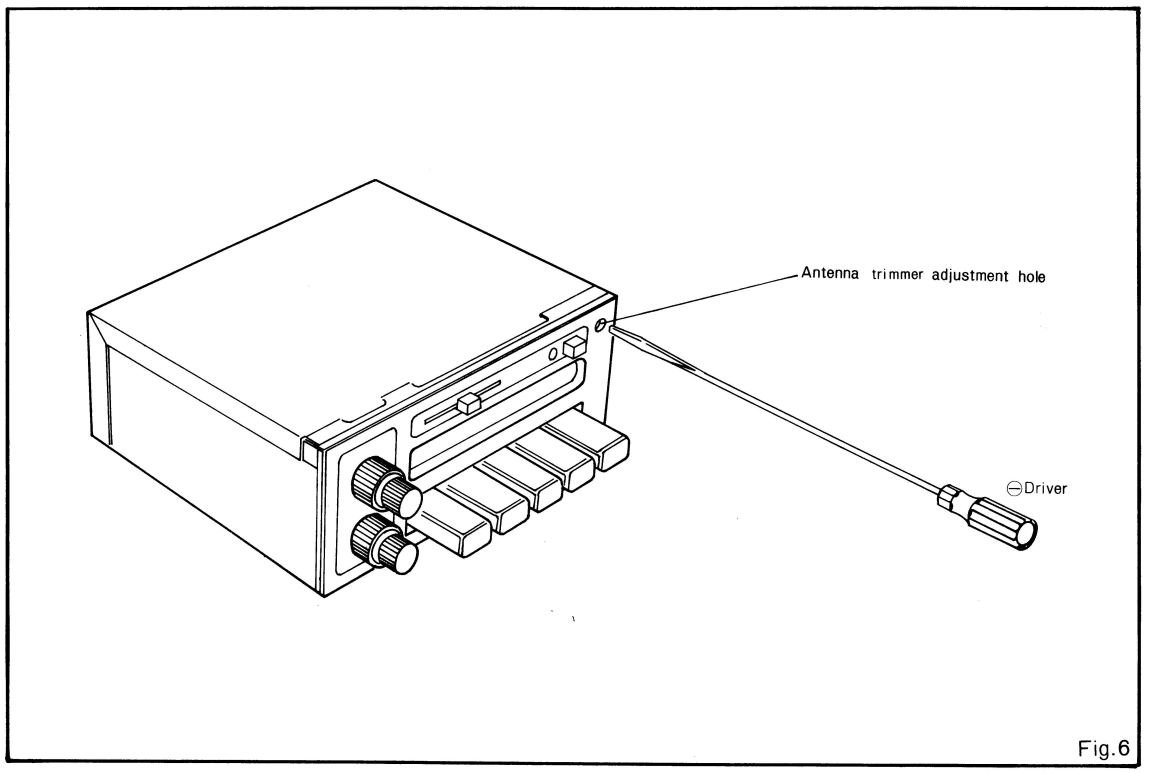

Fig.6

* TROUBLESHOOTING

Symptom	Faulty Circuit	Suspected Parts, Cause	Corrective Action
No sound at all	Power supply circuit	o Fuse blown	Replace
		o Bypass capacitor short	Replace
		o T1 (choke) open	Replace
		o L7 (coil) open	Replace
		o C97 (16-1000), **C54 (10-470) short**	Replace
		o R53 open	Replace
		o Zeener diode (D7) short	Replace
	AF circuit	o Speaker faulty	Replace
		o Speaker lead open	Replace
		o C59, C62 (10-1000) open or short	Replace
		o L4 (coil) open	Replace
		o Bypass capacitor short	Replace
		o IC (051-0036-01~02) faulty	Replace
	AM section	o IFT4,5 open	Replace
		o Q9~11 faulty	Replace
		o TC4 short	Replace
		o C34, C38 faulty	Replace
		o Tuner coil open	Replace
	FM section	o IFT1~3 open	Replace
		o Tuner coil open	Replace
		o Q1~8 faulty	Replace
Sound volume is low, sensitivity is bad	AF circuit	o IC (051-0036-01~02) faulty	Replace
		o C60, C92 capacity down	Replace
		o C61, C93 leaking	Replace
	AM section	o TC4~6 adjustment faulty	Readjust
		o L3 (coil) open	Replace
		o Q9~11 deteriorated	Readjust
		o IFT4, 5 adjustment faulty	Replace
		o Tuner coil open	Replace
		o D6 (1S2076) deteriorated	Replace
	FM section	o TC1~3 adjustment faulty	Readjust
		o Q1~7 deteriorated	Replace
		o IFT1, 3 adjustment faulty	Readjust
		o Tuner copen	Replace
		o D1, 2 deteriorated	Replace
Sound is distorted	AF circuit	o IC3 (051-0036-01~02) faulty	Replace
		o Speaker faulty	Replace
	AM section	o R56, R67, D5, C75 faulty	Replace
	FM section	o Q7, IC1 (051-0050-00~01) faulty	Replace
Abnormal sound is coming	AF circuit	o C94, C98 capacity down	Replace
		o IC2, 3 faulty	Replace
	AM section	o C63, C66, C72, C73, C76 faulty	Replace
	FM section	o C29, C30 capacity down	Replace
		o Bypass capacitors (check each) faulty	Replace
		o Decoupling capacitors (check each) faulty	Replace
Indicator does not light	MPX circuit	o VR1, VR2 misadjusted	Readjust
		o SW1 faulty	Replace
		o C31, C34 capacity down	Replace
		o PL1, R42 open	Replace
Stereo offect is absent	MPX circuit	o C27, C29 faulty	Replace
		o R34 open	Replace
		o C32 faulty	Replace

* PRINTED WIRING BOARD:

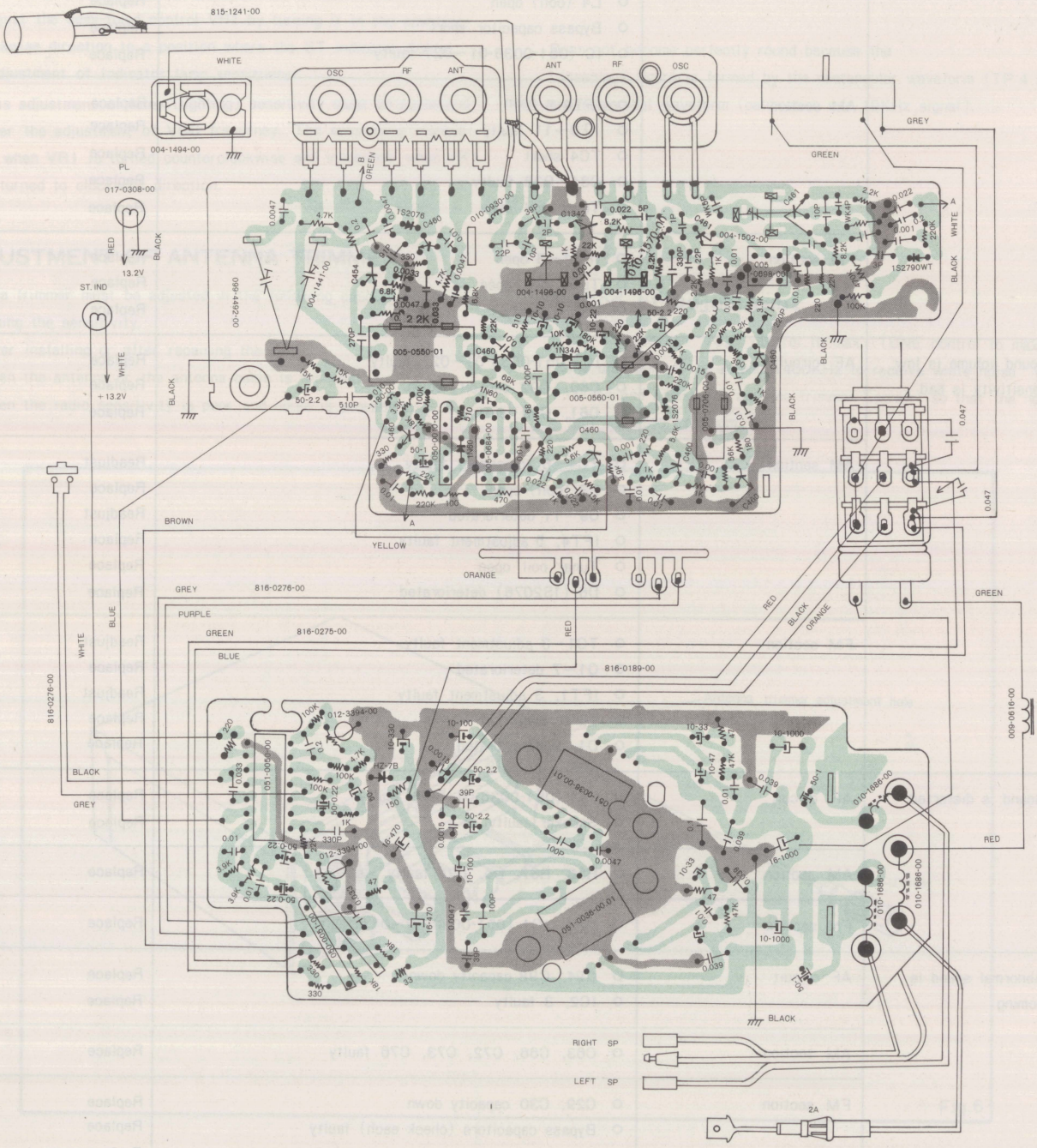

＊PRINTED WIRING BOARD:

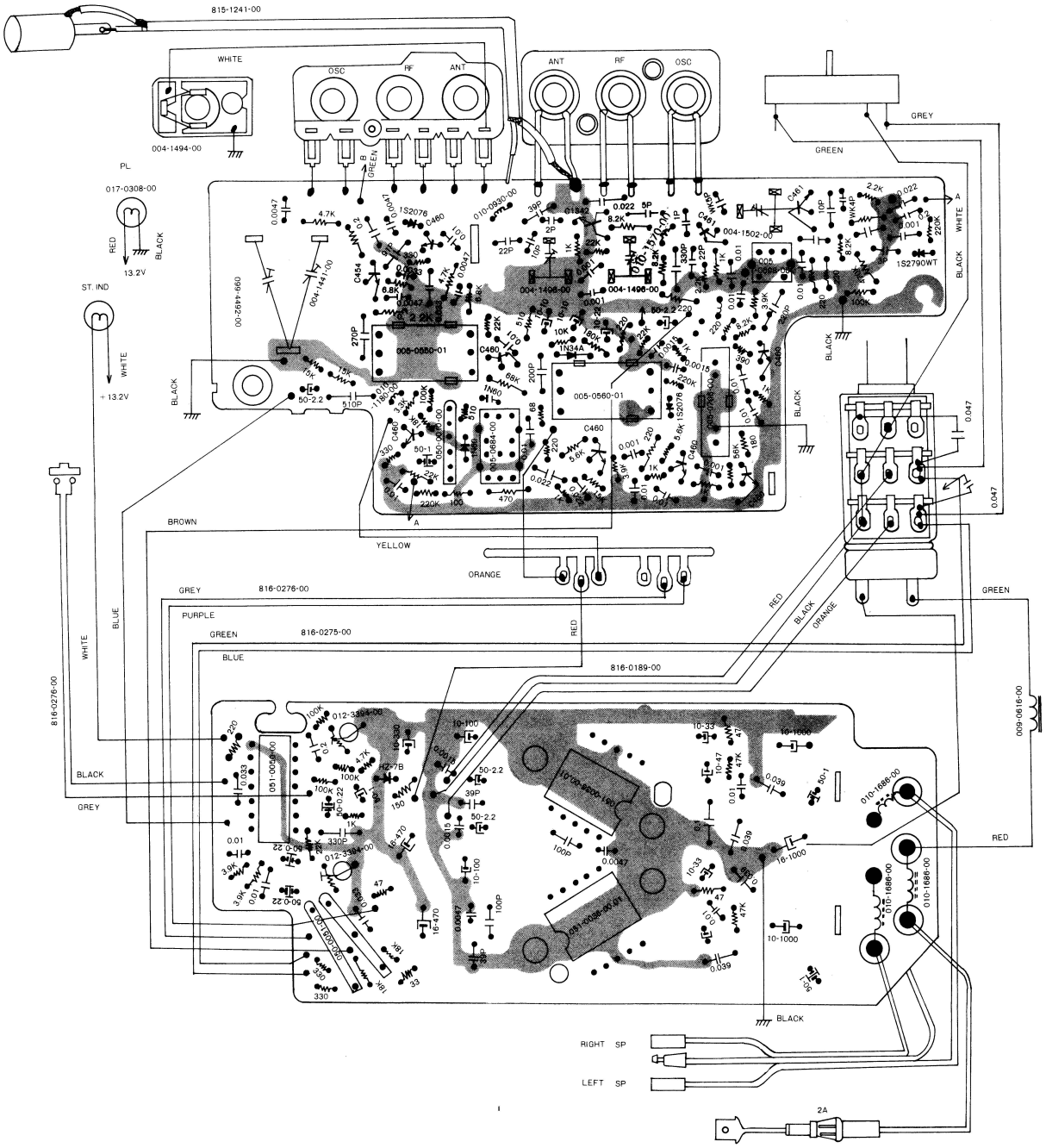

*CIRCUIT DIAGRAM:

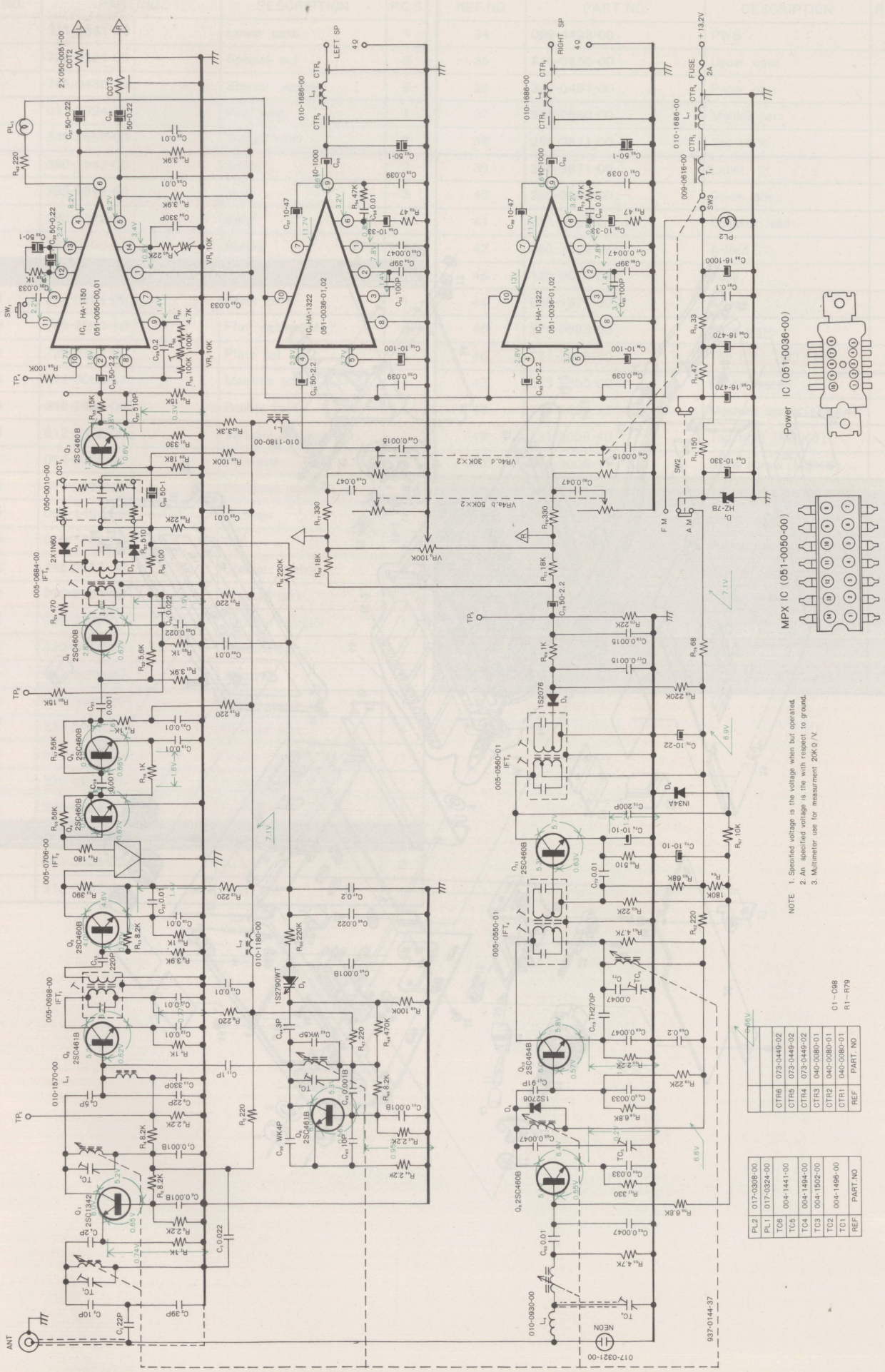

REF	PART NO
PL2	017-0308-00
PL1	017-0324-00
TC6	004-1441-00
TC5	004-1494-00
TC4	004-1502-00
TC3	004-1496-00
TC2	040-0081-01
TC1	040-0081-01
REF	PART NO

REF	PART NO
CTR6	073-0449-02
CTR5	073-0449-02
CTR4	073-0449-02
CTR3	040-0080-01
CTR2	040-0080-01
CTR1	040-0081-01
REF	PART NO

＊CIRCUIT DIAGRAM:

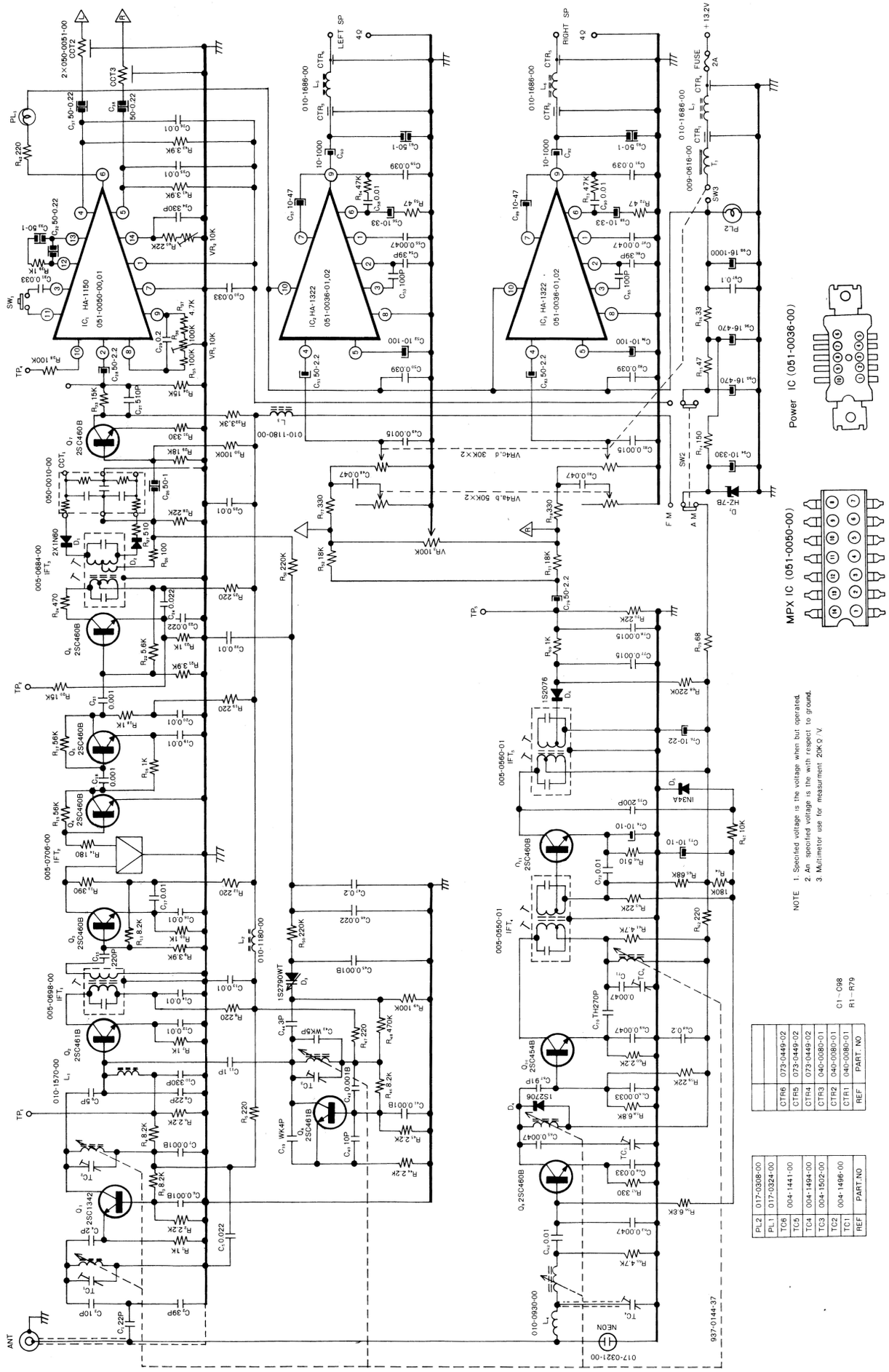

REF	PART. NO
PL2	017-0308-00
PL1	017-0324-00
TC6	004-1441-00
TC5	004-1494-00
TC4	004-1494-00
TC3	004-1502-00
TC2	004-1496-00
TC1	004-1496-00

REF	PART. NO
CTR6	073-0449-02
CTR5	073-0449-02
CTR4	073-0449-02
CTR3	040-0080-01
CTR2	040-0080-01
CTR1	040-0080-01

* EXPLODED VIEW:

⊙Main section

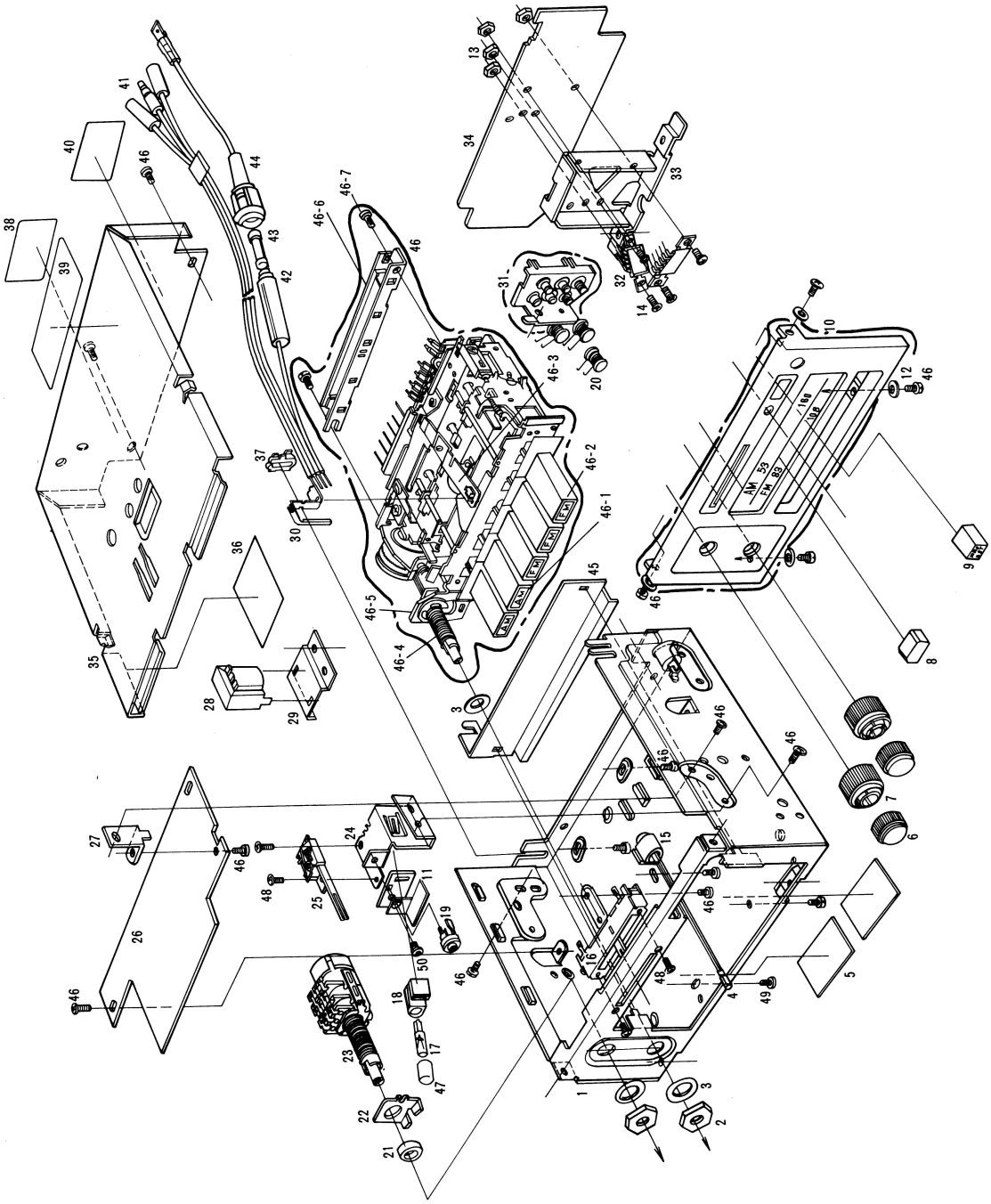

*PARTS LIST

⊙Main section

REF.NO.	PART NO.	DESCRIPTION	P.C.S
1	311-0881-00	Lower case	1
2	722-0231-00	Special nut	2
3	745-0430-01	Special washer	3
4	017-0324-00	Pilot lamp	1
5	345-2658-00	Rubber part	2
6	380-3542-00	Knob	2
7	380-3543-00	Knob	2
8	380-3372-01	Knob	1
9	382-0100-00	Button	1
10	940-0018 A	Escutcheon assembly	1
11	347-0564-00	Paper part	1
12	740-3000-10	Flat washer (M3)	4
13	725-0182-00	Plate nut	4
14	714-3006-81	Machine screw(M3×6)	4
15	345-2636-00	Rubber part	1
16	012-3382-00	Variable resistor	1
17	017-0308-00	Pilotlamp	1
18	070-0952-00	Pilotlamp socket	1
19	004-1494-00	Trimmer	1
20	010-1686-00	Coil	1
21	745-0553-00	Special washer	1
22	330-5751-00	Pressed part	1
23	012-3280-01	Variable resistor	1
24	330-5757-00	Pressed part	1
25	013-3239-00	Switch	1
26	099-4492-00	PWB	1
27	330-5752-00	Pressed part	1
28	009-0616-00	Choke	1
29	330-5248-00	Pressed part	1
30	376-0754-01	Dial pointor	1
31	944-0445-00	Filter assembly	1
32	051-0036-02	IC	2
33	313-0907-01	Heat sink	1

REF.NO.	PART NO.	DESCRIPTION	P.C.S
34	099-4493-00	PWB	1
35	310-0850-00	Upper case	1
36	347-0461-00	Paper part	1
37	335-0580-00	Molded part	1
38	286-3871-00	Set plate	1
39	285-3871-00	Label	2
40	285-0582-00	Guide label	1
41	851-2057-01	Speaker lead	1
42	850-1822-00	A-lead	1
43	120-0020-00	Fuse	1
44	850-1875-00	A-lead	1
45	374-0683-00	Back plate	1
46	731-3006-80	Tap tight (M3×6)	14
47	345-2655-00	Rubber part	1
48	714-2004-11	Machine screw (M2×4)	4
49	731-3006-40	Tap tight (M3×6)	3
50	732-3006-11	Sems screw (M3×6)	1
51	937-0144-37	6 coil push button tuner	1
51-1	965-2026-00	Button assembly (AM)	2
51-2	965-2027-00	Button assembly (FM)	3
51-3	965-2015-00	Pointor arm assembly	1
51-4	965-2117-00	Tuning shaft assembly	1
51-5	744-0005-00	Special E-ring	1
51-6	013-3102-01	Switch	1
51-7	731-3006-80	Top tight (M3×6)	2

⊙RF section

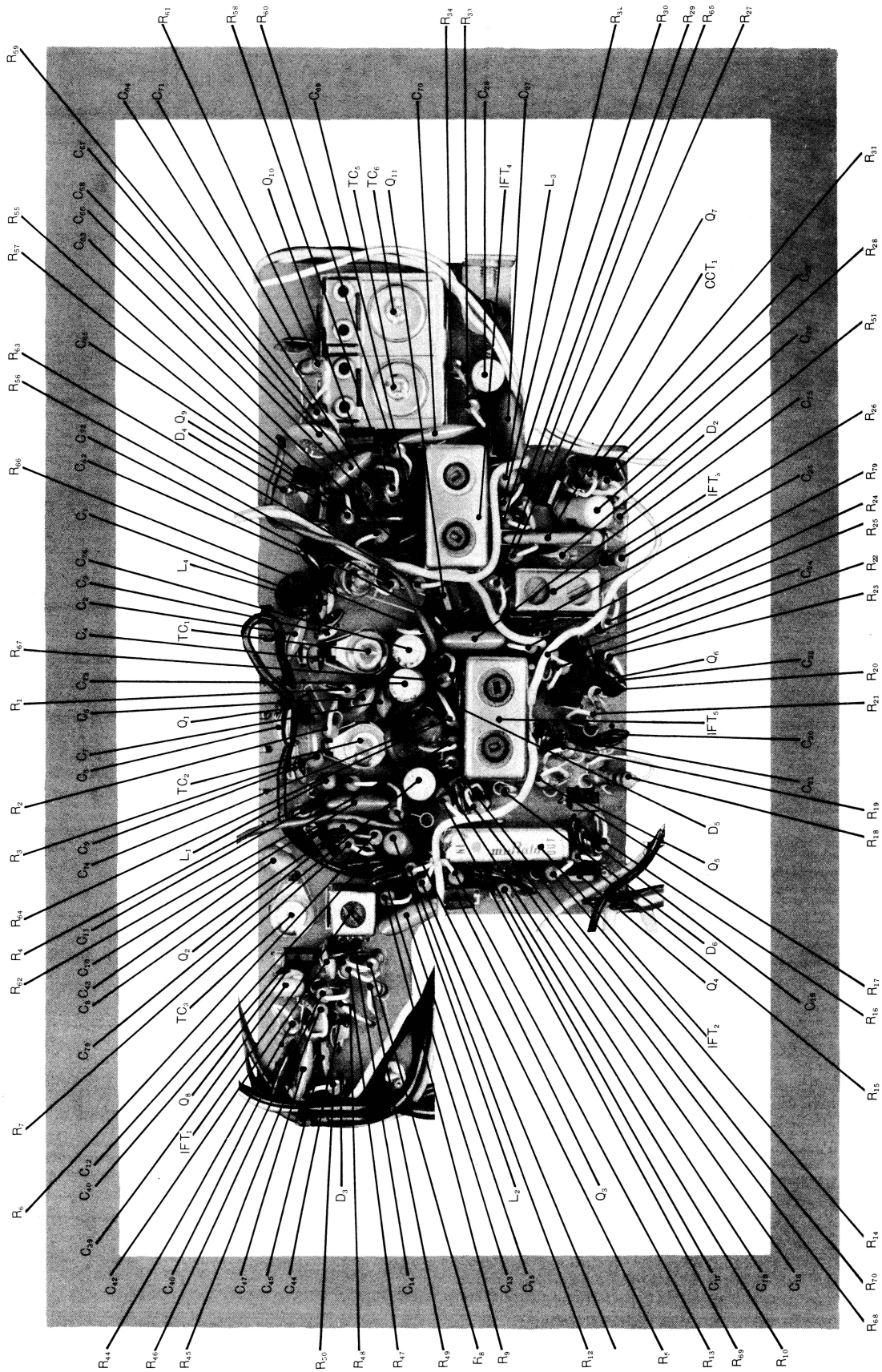
R59
R61
R58
R60
R34
R31
R32
R30
R29
R65
R27
C64
C71
C69
C70
C75
C68
C66
C67
C65
C73
C74
C72
C76
C77
C78
C79
C80
Q10
TC5
TC6
Q11
IFT4
L3
Q7
CCT1
R55
R57
R63
R56
R66
D4
Q9
D2
IFT3
L4
TC1
Q1
TC2
L1
Q2
TC3
Q8
IFT1
D3
L2
Q3
Q6
IFT5
D5
Q5
D6
Q4
IFT2
R67
R1
R2
R3
R64
R4
R62
R7
R6
R31
R28
R51
R26
R79
R24
R25
R22
R23
R20
R21
R19
R18
R17
R16
R15
R14
R70
R68
R44
R46
R45
R50
R48
R47
R49
R5
R9
R12
R8
R13
R69
R10
C42
C40
C47
C45
C44
C14
C43
C13
C12
C11
C41
C39
C38
C37
C36
C35
C34
C33
C32
C31
C30
C29
C28
C27
C26
C25
C24
C23
C22
C21
C20
C19
C18

* PARTS LIST:

⊙RF SECTION

REF.NO.	PART NO.	DESCRIPTION	P.C.S
Q_1	2SC1342	Transistor	1
$Q_{2,8}$	2SC461B	Transistor	2
$Q^{11}_{3,4,5,6,7,9,}$	2SC460B	Transistor	7
Q_{10}	2SC454B	Transistor	1
$D_{1,2}$	001-0020-00	Diode (1N60)	2
D_3	001-0130-00	Diode (1S2790WT)	1
$D_{4,6}$	001-0095-00	Diode (1S2076)	2
D_5	001-0010-00	Diode (1N34A)	1
$TC_{1,2}$	004-1496-00	Trimmer	2
TC_3	004-1502-00	Trimmer	1
TC_5	004-1441-00	Trimmer	1
IFT_1	005-0698-00	IF-trans	1
IFT_2	005-0706-00	IF-trans	1
IFT_3	005-0684-00	IF-trans	1
IFT_4	005-0550-01	IF-trans	1
IFT_5	005-0560-01	IF-trans	1
L_1	010-1570-00	Coil	1
$L_{2,3}$	010-1180-00	Coil	2
L_4	010-0930-00	Coil	1
CCT_1	050-0010-00	Component cct	1
$C_{1,8}$	152-2202-13	Ceramic capacitor (22PF)	2
C_2	152-3902-13	Ceramic capacitor (39PFCH)	1
C_3	151-1002-13	Ceramic capacitor (10PF)	1
C_4	153-2096-13	Ceramic capacitor (2PF CH)	1
$C_{5,23,24,46}$	141-2233-13	Polyester capacitor (50V0.022μF)	4
$C_{6,7,41,42,45}$	043-0053-00	Special capacitor (0.001μF)	5
C_9	153-5096-13	Ceramic capacitor (5PF CH)	1
C_{15}	144-3312-17	Mica capacitor (50V220PF)	1
C_{11}	153-1096-13	Ceramic capacitor (1PF CH)	1
$C^{20,22,25,62,72}_{12,13,14,16,17,19}$	141-1033-12	Polyester capacitor (50V0.01μF)	11
C_{10}	144-3312-17	Mica capacitor (50V330PF)	1
$C_{18,21}$	141-1023-11	Polyester capacitor (50V0.001μF)	2
C_{26}	180-1054-62	Electrolytic capacitor (50V1μF)	1
C_{27}	144-5111-17	Mica capacitor (50V510PF)	1
$C_{28,79}$	180-2254-62	Electrolytic capacitor (50V2.2μF)	2
C_{39}	153-4097-70	Ceramic capacitor (4PF WK)	1
C_{40}	151-1002-13	Ceramic capacitor (10PF)	1
C_{43}	153-5097-70	Ceramic capacitor (5PF WK)	1
C_{44}	153-3096-13	Ceramic capacitor (3PF CH)	1

REF.NO.	PART NO.	DESCRIPTION	P.C.S
$C_{47,68}$	043-0020-00	Special capacitor (0.2μF)	2
$C_{63,65,69,71}$	141-4723-12	Polyester capacitor (50V0.0047μF)	4
C_{64}	141-3333-13	Polyester capacitor (50V0.033μF)	1
C_{66}	141-3323-13	Polyester capacitor (50V0.0033μF)	1
C_{67}	144-9102-14	Mica capacitor (50V91PF)	1
C_{70}	156-2711-50	Ceramic capacitor (270PF TH)	1
$C_{73,74}$	180-1064-22	Electrolytic capacitor (10V10μF)	2
C_{75}	144-2012-17	Mica capacitor (50V200PF)	1
C_{76}	042-0199-00	Special capacitor (10V22μF)	1
$C_{77,78}$	141-1523-12	Polyester capacitor (50V0.0015μF)	1
$R^{69}_{1,7,10,16,18,23}$	111-1021-32	Film resistor (¼W 1K Ω±5%)	7
$R_{2,44,45,60}$	111-2221-32	Film resistor (¼W2.2K Ω±5%)	4
$R_{3,4,11,46}$	111-8221-32	Film resistor (¼W8.2K Ω±5%)	4
$R^{47,62}_{5,8,12,19,25}$	111-2211-32	Film resistor (¼W220 Ω ±5%)	7
$R_{9,21}$	111-3921-32	Film resistor (¼W3.9K Ω±5%)	2
R_{13}	111-3911-32	Film resistor (¼W390 Ω ±5%)	1
R_{14}	111-1811-32	Film resistor (¼W180 Ω ±5%)	1
$R_{15,17}$	111-5631-32	Film resistor (¼W 56K Ω±5%)	2
R_{133}	111-1531-32	Film resistor (¼W 15K Ω±5%)	1
R_{22}	111-5621-32	Film resistor (¼W5.6K Ω±5%)	1
R_{24}	111-4711-32	Film resistor (¼W470 Ω ±5%)	1
R_{26}	111-1011-32	Film resistor (¼W100 Ω ±5%)	1
$R_{27,66}$	111-5111-32	Film resistor (¼W510 Ω ±5%)	2
$R_{28,59,63}$	111-2231-32	Film resistor (¼W 22K Ω±5%)	3
R_{29}	111-1831-32	Film resistor (¼W 18K Ω±5%)	1
$R_{30,49}$	111-1041-32	Film resistor (¼W100K Ω±5%)	2
$R_{31,57}$	111-3311-32	Film resistor (¼W330 Ω ±5%)	2
R_{32}	111-3321-32	Film resistor (¼W3.3K Ω±5%)	1
$R_{34,20}$	110-1531-32	Solid resistor (¼W 15K Ω±5%)	2
R_6	110-2221-32	Solid resistor (¼W2.2K Ω±5%)	1
R_{48}	111-4741-32	Film resistor (¼W470K Ω±5%)	1
$R_{50,51,68}$	111-2241-32	Film resistor (¼W220K Ω±5%)	3
$R_{55,61}$	111-4721-32	Film resistor (¼W4.7K Ω±5%)	2
$R_{56,58}$	111-6821-32	Film resistor (¼W6.8K Ω±5%)	2
R_{64}	111-1841-32	Film resistor (¼W180K Ω±5%)	1
R_{65}	111-6831-32	Film resistor (¼W 68K Ω±5%)	1
R_{67}	111-1031-32	Film resistor (¼W 10K Ω±5%)	1
R_{70}	110-2231-32	Solid resistor (¼W 22K Ω±5%)	1
R_{79}	111-6801-32	Film resistor (¼W680 Ω ±5%)	1

⊙AF Section

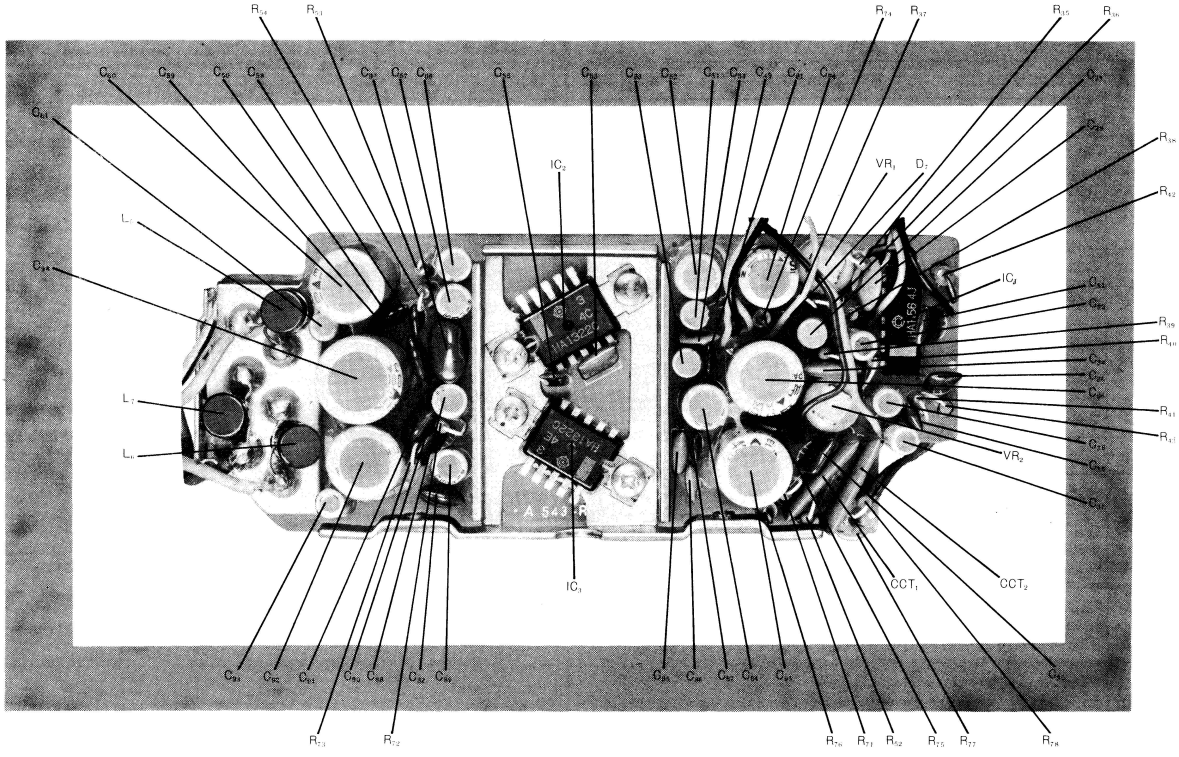

＊PARTS LIST:

⊙AF SECTION

REF.NO.	PART NO.	DESCRIPTION	P.C.S
IC_1	051-0050-00	IC	1
$IC_{2,3}$	051-0036-02	IC	2
$L_{5,6,7}$	010-1686-00	Coil	3
D_7	001-0099-00	Diode (HZ-7B)	1
$VR_{1,2}$	012-3394-00	Variable resistor	2
C_{29}	043-0020-00	Special capacitor	1
$C_{30,31}$	141-3333-13	Polyester capacitor (50V0.033μF)	2
$C_{32,37,38}$	042-0140-00	Special capacitor (50V0.22μF)	3
$C_{33,61,93}$	180-1054-62	Special capacitor (50V1μF)	3
C_{34}	144-3312-17	Mica capacitor (50V330PF)	1
$C_{35,36,58,90}$	141-1033-12	Polyester capacitor (50V0.01μF)	4
$C_{50,91,59,82}$	141-3933-13	Polyester capacitor (50V0.039μF)	4
$C_{51,28,83}$	180-2254-62	Electrolytic capacitor (50V2.2μF)	3
$C_{52,84}$	180-1074-22	Electrolytic capacitor (10V100μF)	2
$C_{53,85}$	144-1012-14	Mica capacitor (50V100PF)	2
$C_{54,86}$	152-3902-13	Ceramic capacitor (39PF CH)	2
$C_{55,87}$	141-4723-12	Polyester capacitor (50V0.0047μF)	2
$C_{56,88}$	180-3364-22	Electrolytic capacitor (10V33μF)	2
$C_{57,89}$	180-4764-22	Electrolytic capacitor (10V47μF)	2
$C_{60,92}$	042-0153-00	Special capacitor (10V1000μF)	2
C_{81}	141-1523-12	Polyester capacitor (50V0.0015μF)	1
C_{94}	180-3374-22	Electrolytic capacitor (10V330μF)	1
$C_{95,96}$	180-4774-32	Electrolytic capacitor (16V470μF)	2
C_{97}	141-1043-15	Polyester capacitor (50V0.1μF)	1
C_{98}	042-0178-00	Special capacitor (16V1000μF)	1

REF.NO.	PART NO.	DESCRIPTION	P.C.S
$R_{35,36}$	111-1041-32	Film resistor (¼W100KΩ±5%)	2
R_{37}	111-4721-32	Film resistor (¼W4.7KΩ±5%)	1
R_{38}	110-1041-32	Solid resistor (¼W100KΩ±5%)	1
R_{39}	111-1021-32	Film resistor (¼W1KΩ±5%)	1
R_{40}	111-2231-32	Film resistor (¼W22KΩ±5%)	1
$R_{41,43}$	111-3921-32	Film resistor (¼W3.9KΩ±5%)	2
R_{42}	110-2211-42	Solid resistor (½W220Ω±5%)	1
$R_{52,71}$	111-1831-32	Film resistor (¼W18KΩ±5%)	2
$R_{53,72}$	111-4701-32	Film resistor (¼W47Ω±5%)	2
$R_{54,73}$	111-4731-32	Film resistor (¼W47KΩ±5%)	2
R_{74}	110-1511-42	Solid resistor (½W150Ω±5%)	1
R_{75}	111-4701-32	Film resistor (¼W47Ω±5%)	1
R_{76}	110-3301-42	Solid resistor (½W33Ω±5%)	1
$R_{77,78}$	111-3311-32	Film resistor (¼W330Ω±5%)	2
$CCT_{1,2}$	050-0051-00	Component CCT	2

⊙MISCELLANEOUS

REF.NO.	PART NO.	DESCRIPTION	P.C.S
T_1	009-0616-00	Choke	1
R_{79}	111-6801-32	Film resistor (¼W68Ω±5%)	1
$C_{80,48}$	141-4733-14	Polyester capacitor (50V0.047μF)	2