Clarion

SERVICE MANUAL

Closer Relations through "CLARION SERVICE MANUAL"

MODEL RU-140C-01

Manufacturer CLARION CO., LTD. / Export Division CLARION SHOJI CO., LTD.
3, Kojimachi 5-chome, Chiyoda-ku, Tokyo, 102 Japan Tel: (265) 2931 Telex: J22908, J22152 CLARISHO
Overseas Sales Branch Offices:
CLARION SHOJI (EUROPA) G.m.b.H. Rudolf-Diesel-Strasse 2, 6236 Eschborn 2, West Germany Tel: 06173-61041-42 Telex: 415414
CLARION CORPORATION OF AMERICA 5500 Rosecrans Blvd.P.O.Box 749, Lawndale, Calif., 90260 U.S.A. Tel: 213-973-1100 Telex: CLARIONLSA 66-4447
CLARION (HONG KONG) CO., LTD, Rooms 333-335, Star House, 3, Salisbury Road, Tsimshatsui, Kowloon, Hong Kong Tel: 3-695393 Telex: SIERA HX74922

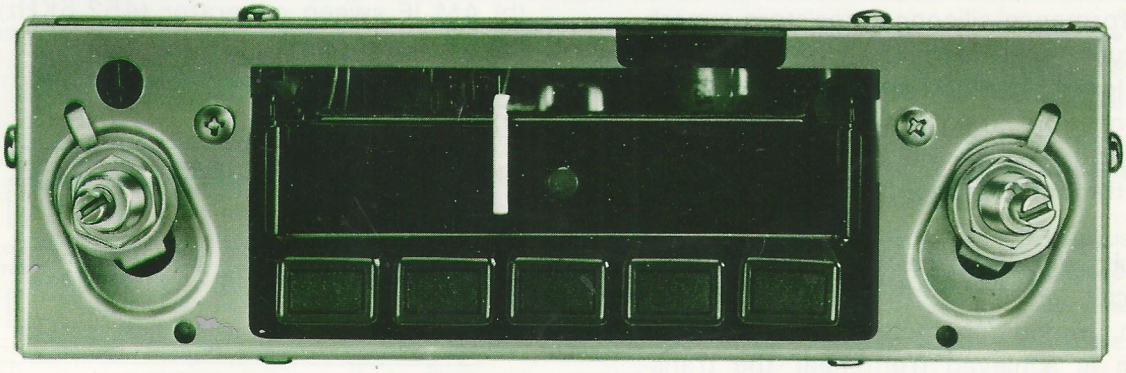

■SPECIFICATIONS:

Circuit system:	Superheterodyne
Tuning system:	μ-tuning, 5-push-buttons
Receiving range:	530 to 1610KHz
Intermediate frequency:	452.5KHz
Maximum sensitivity:	Better than 10dB (at 600, 1000,1400KHz)
Selectivity:	6KHz to 10KHz
Image ratio:	More than 90dB
Intermediate frequency ratio:	More than 68dB
AGC F.O.M:	More than 76dB
Fidelity:	100Hz High 1±3dB
	Low 9±3dB
	5000Hz High −14±5dB
	Low −26±5dB
Power output:	4w (at less than 7.5% distortion)
Maximum output:	More than 5w
Load impedance:	4Ω
Power requirements:	14.4V DC (standard voltage) ⊖ ground only
Current consumption:	Less than 1A
Semiconductors:	1 IC, 6 transistors, 2 diodes
	RF amplifier 2SC461×1
	Frequency converter 2SC460×1
	Local oscillator 2SC460×1
	IF amplifier 2SC460×2
	Detector 001-0010-00×1 (1N34A)
	Voltage regulator 001-0101-00×1 (HZ9A)
	Audio output amplifier 051-0036-02,03×1 (HA1322)
Dimensions:	Width 160m/m
	Height 50m/m
	Depth 120m/m
Weight:	1.1kg

Printed in Japan 298-2067-00

■COMPONENT VIEW:

	Main unit	1			
921-6413-00	Parts bag	1	950-5446-00	Packaging kit	1

330-5860-00
Pressed part

■FEATURES:

1. Silicone transistors and IC are used
   This is a high performance car radio using high performance silicone transistors superb temperature characteristic (operate nicely both at low and high temperatures) in the RF section and monolithic IC capable of withstanding adverse vibration and environment in the audio section.

2. RF circuit with 4-stage tuner and strong AGC circuit
   A sharp tuning characteristic and stable reception is achieved from near the transmitting antenna to weak field areas between buildings or in valleys.

3. Ceramic filter in IF circuit
   Since ceramic filters providing ideal selectivity characteristic are used, adjacent channel interference is eliminated and quite clear reception is achieved.

4. Low-distortion high-performance power IC
   Since specially selected power IC having low distortion characteristic is used in the output stage, the sound output is very pleasant and undistorted.

5. Large capacitor in audio circuit
   By using large capacity capacitors of 2200μF in the output stage and power supply, a distortionless dynamic output up to low frequencies is achieved.

6. Potentiometer with center tap
   Centered-tapped potentiometer used in the tone control provides not only usual tone control operation but also semiloudness effect so that dynamic sound can be enjoyed even at low volumes.

■ADJUSTMENTS OF AM TUNER:

1. Instruments Required
   (a) AM standard signal generator (S.S.G)
   (b) AM IF sweep generator (452.5KHz)
   (c) Oscilloscope
   (d) Dummy load
   (e) Dummy antenna (See below Fig.)

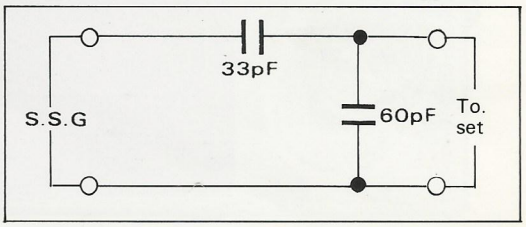

2. IF Adjustments
   (a) Connect the sweep generator output to TP1 and the oscilloscope vertical input to TP2.
   Turn the tuning knob of the set fully to the right. Perform the adjustment with the generator output as small as possible and the oscilloscope vertical gain as large as possible.
   (b) Adjust the cores of IFT1, IFT2 and IFT3 for maximum waveform height with good symmetry.

3. Tracking Adjustments

   Apply the output of S.S.G. to the set via dummy antenna. Set the tuning knob for maximum receiving frequency.
   Adjust the trimmer (TC4) to receive 1620KHz signal and then set the tuning knob for lowest receiving frequency.
   Adjust the coil (L2) to receive 515KHz signal.
   Now adjust the trimmer TC1, TC2 and TC3 for maximum audio output on the receiving frequency of 1400KHz.
   AT this time, the Volume and Tone knobs should be at the maximum position.

■TROUBLESHOOTING:

Symptom	Trouble point	Probable cause	Corrective action
No sound	Power supply circuit	o Fuse blown	o Replace
		o Choke transformer (009-0618-00) open	o Replace or repair
		o Filter choke (010-1686-00) open	o Replace or repair
		o Switch contact faulty	o Replace or repair
		o R_{32}, R_{36} open	o Replace
		o C_5, C_{34}, C_{48}, C_{49}, C_{50} shorted	o Replace
	Output circuit	o Power IC (051-0036-02,03) faulty	o Replace
		o Output capacitor C_{46} faulty	o Replace
		o Speaker voice coil open	o Replace
	RF circuit	o Antenna receptacle open	o Replace
		o μ-tuner coil open	o Replace
		o $Q_1 \sim Q_5$ faulty	o Replace
Sound distorted	Output circuit	o Power IC (051-0036-02,03) defective	o Replace
		o Speaker faulty	o Replace
		o C_{46} faulty	o Replace
	RF circuit	o Improper adjustment of ANT-trimmer (TC1), RF-trimmer	o Re-adjust
		o Improper adjustment of $IFT_{1\sim3}$	o Re-adjust
		o $Q_{1\sim5}$ defective	o Replace
		o D_1, D_2 faulty	o Replace
		o R_{14}, R_{29}, R_{30}, R_{31} open or resistance variation	o Replace
Oscillation	Output circuit	o Capacity drop of C_{49}	o Replace
		o D_3 faulty	o Replace
		o Power IC (051-0036-02,03) looseness of mounting screw	o Screw bind
		o Externally connected capacitor of IC saulty o or capacity drop	o Replace

■EXPLODED VIEW:

◎Main section

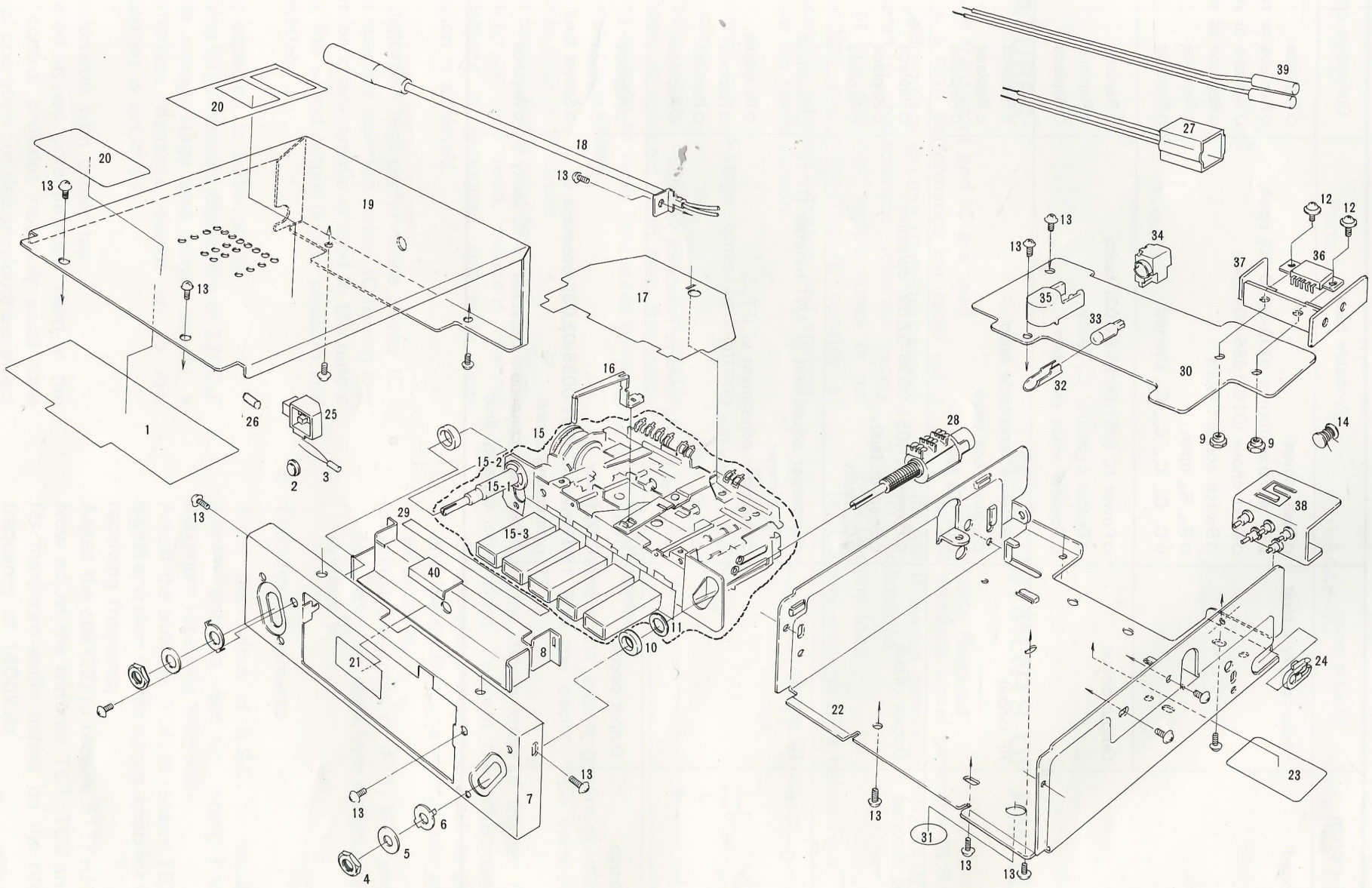

■PARTS LIST:

◎Main section

REF.NO.	PART NO.	DESCRIPTION	RANK
1	353-0010-00	Shade	
2	375-0530-01	Pilotlamp accessory	
3	017-0308-05	Pilotlamp	1
4	722-0231-00	Special nut	
5	745-0250-00	Special washer	
6	330-5341-00	Pressed part	
7	308-0865-00	Front cover	
8	374-0694-01	Back plate	
9	725-0182-00	Plate nut	
10	745-0220-00	Special washer	
11	745-0514-01	Special washer	
12	735-3008-11	D-sems screw(M3x8)	
13	731-3006-80	Taptight(M3x6)	
14	010-1686-00	Coil	3
15	938-0041-07	4 coil push button tuner	
15-1	965-2585-00	Tuning shaft assembly	
15-2	744-0005-00	Special E-ring	
15-3	680-0045-00	Push button	3
16	376-0801-01	Dial pointer	
17	347-0523-02	Paper part	
18	092-0529-00	Antenna receptacle	
19	310-0860-01	Upper case	

REF.NO.	PART NO.	DESCRIPTION	RANK
20	286-4107-00	Setplate	
21	286-4108-00	Setplate	
22	311-0893-00	Lower case	
23	285-0656-00	Guide label	
24	335-0580-00	Molded part	
25	345-2497-00	Rubber part	
26	820-4010-03	Venyl-tube	
27	850-1985-00	A-lead	
28	012-3607-00	Variable resistor	2
29	353-0088-00	Shade	
30	099-4544-02	PWB	
31	290-2438-00	Label	
32	330-5002-00	Pressed part	
33	017-0306-01	Pilotlamp	1
34	070-0927-01	Pilotlamp socket	
35	335-0635-06	Molded part	
36	051-0036-02	IC(HA1322)	1
37	313-0937-00	Heat sink	
38	944-0458-00	Filter assembly	
39	851-2245-00	Sp-lead	
40	347-0583-00	Paper part	

■PARTS LIST:

◎Electrical section

REF.NO.	PART NO.	DESCRIPTION	RANK
D_1	001-0010-00	Diode(1N34A)	3
D_2	001-0101-00	Diode(HZ9A)	3
IFT_1	005-0711-00	IF-trans	
IFT_2	005-0712-00	IF-trans	
IFT_3	005-0713-00	IF-trans	
$L_{5,6}$	010-1686-00	Coil	3
L_3	010-1787-00	Coil	3
L_2	010-1726-00	Coil	3
L_7	010-1734-00	Coil	3
L_4	009-0618-00	Choke	3
TC_1	004-1514-00	Trimmer	
TC_3	004-1494-00	Trimmer	
$TC_{2,4}$	004-1498-00	Trimmer	
$C_{5,17}$	042-0176-00	Special capacitor (16V10μF)	
$C_{46,54}$	042-0153-00	Special capacitor (10V1000μF)	
$C_{49,53}$	042-0214-00	Special capacitor (16V1000μF)	
C_{33}	043-0020-00	Special capacitor (12V0.2μF)	
$C_{21,23,27,44}$	043-0039-00	Special capacitor (12V0.1μF)	
C_4	141-1023-11	Polyester capacitor (50V0.001μF)	
$C_{36,38}$	141-1523-11	Polyester capacitor (50V0.0015μF)	
C_{11}	141-2223-11	Polyester capacitor (50V0.0022μF)	
C_{42}	141-3333-13	Polyester capacitor (50V0.033μF)	
C_{52}	141-6823-11	Polyester capacitor (50V0.0068μF)	
$C_{2,15}$	141-3323-11	Polyester capacitor (50V0.0033μF)	
C_{29}	141-4723-11	Polyester capacitor (50V0.0047μF)	
$C_{1,7,9,14,30}$	141-1033-12	Polyester capacitor (50V0.01μF)	
$C^{10,20,24}_{28,45,48}$	141-3933-13	Polyester capacitor (50V0.039μF)	
C_{32}	141-4733-13	Polyester capacitor (50V0.047μF)	
$C_{3,16,25,51}$	141-1043-16	Polyester capacitor (50V0.1μF)	
C_{12}	143-4712-12	Polyester capacitor (50V470PF)	
C_8	144-1212-17	Mica capacitor (50V120PF)	
C_6	144-1512-17	Mica capacitor (50V150PF)	
C_{44}	160-2222-05	Ceramic capacitor (50V0.0022μF)	
C_{50}	163-2045-01	Ceramic capacitor (50V0.02μF)	
C_{41}	153-2212-46	Ceramic capacitor (220PFSL)	

REF.NO.	PART NO.	DESCRIPTION	RANK
C_{22}	154-3312-46	Ceramic capacitor (330PFUH)	
C_{13}	154-6802-31	Ceramic capacitor (68PFPH)	
$C_{26,40}$	155-3312-56	Ceramic capacitor (330PFUH)	
$C_{31,35,47}$	180-1054-62	Electrolytic capacitor (50V1μF)	
$C_{19,37}$	180-1064-22	Electrolytic capacitor (10V10μF)	
C_{18}	180-2264-22	Electrolytic capacitor (10V22μF)	
C_{43}	180-3364-22	Electrolytic capacitor (10V33μF)	
$C_{34,39}$	180-1074-22	Electrolytic capacitor (10V100μF)	
IC_1	051-0036-$^{02}_{03}$	IC(HA1322)	1
$Q_{2\sim5}$	102-0460-00	Transistor (2SC460)	1
Q_6	102-1675-12	Transistor (2SC1675L)	1
R_{37}	110-1511-41	Solid resistor (½W150Ω)	
R_{36}	110-2211-42	Solid resistor (½W220Ω)	
R_{34}	111-1021-31	Film resistor (¼W1KΩ)	
R_{33}	111-2721-31	Film resistor (¼W2.7KΩ)	
R_{12}	111-2701-32	Film resistor (¼W27Ω)	
$R_{8,32}$	111-1011-32	Film resistor (¼W100Ω)	
R_{25}	111-1511-32	Film resistor (¼W150Ω)	
$R_{16,26,27}$	111-2211-32	Film resistor (¼W220Ω)	
R_6	111-2711-32	Film resistor (¼W270Ω)	
$R_{5,18}$	111-3311-32	Film resistor (¼W330Ω)	
$R_{28,35}$	111-4711-32	Film resistor (¼W470Ω)	
R_{24}	111-5611-32	Film resistor (¼W560Ω)	
R_{11}	111-6811-32	Film resistor (¼W680Ω)	
R_{13}	111-1521-32	Film resistor (¼W1.5KΩ)	
$R_{9,17}$	111-2221-32	Film resistor (¼W2.2KΩ)	
$R_{4,29}$	111-2721-32	Film resistor (¼W2.7KΩ)	
$R_{7,14,20}$	111-3321-32	Film resistor (¼W3.3KΩ)	
$R_{1,31}$	111-4721-32	Film resistor (¼W4.7KΩ)	
R_{19}	111-5621-32	Film resistor (¼W5.6KΩ)	
$R_{21,22}$	111-6821-32	Film resistor (¼W6.8KΩ)	
$R_{2,30}$	111-8221-32	Film resistor (¼W8.2KΩ)	
R_{10}	111-1031-32	Film resistor (¼W10KΩ)	
$R_{3,23}$	111-2231-32	Film resistor (¼W22KΩ)	
R_{15}	111-5631-32	Film resistor (¼W56KΩ)	

■PRINTED WINING BOARD:

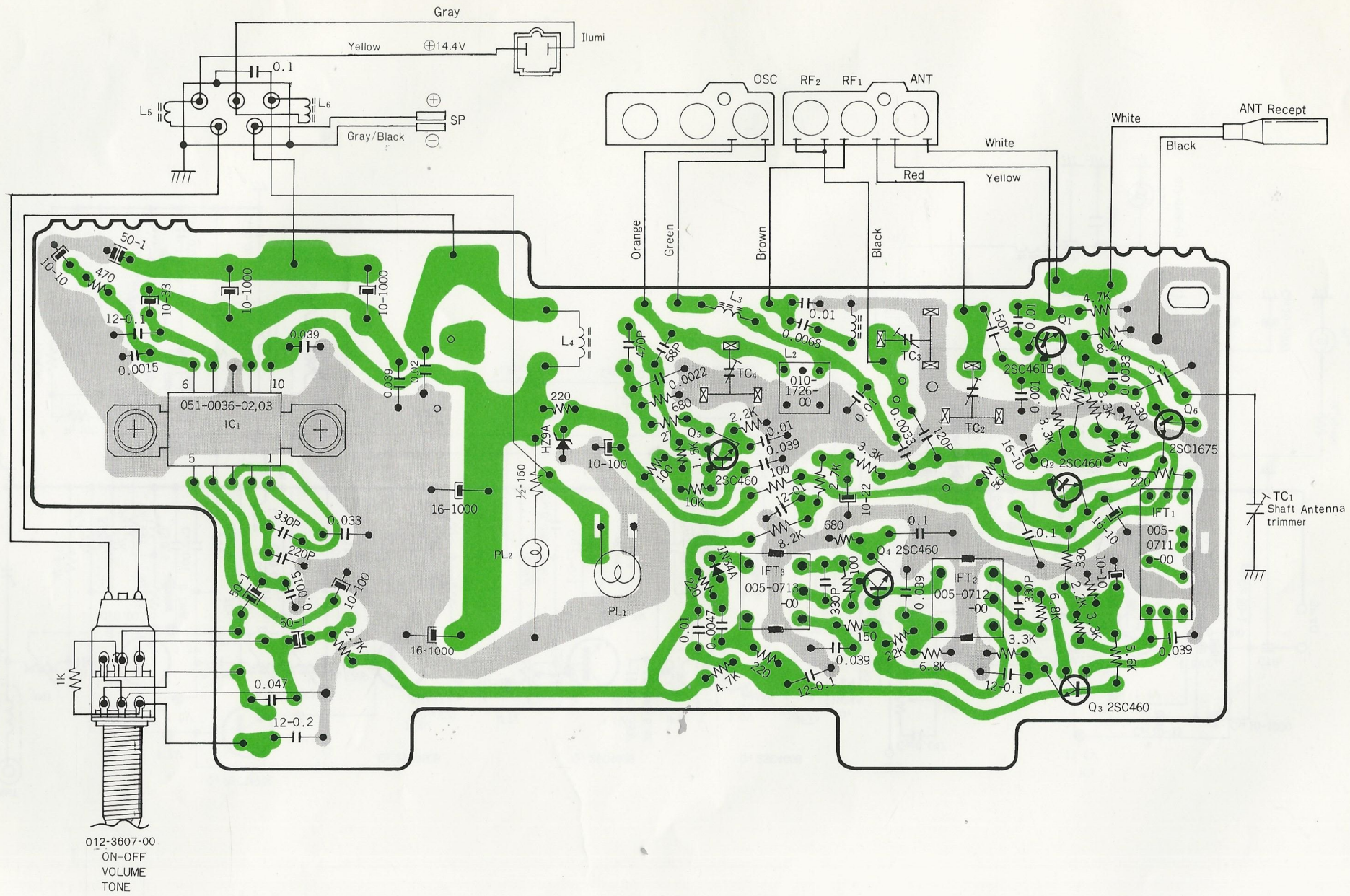
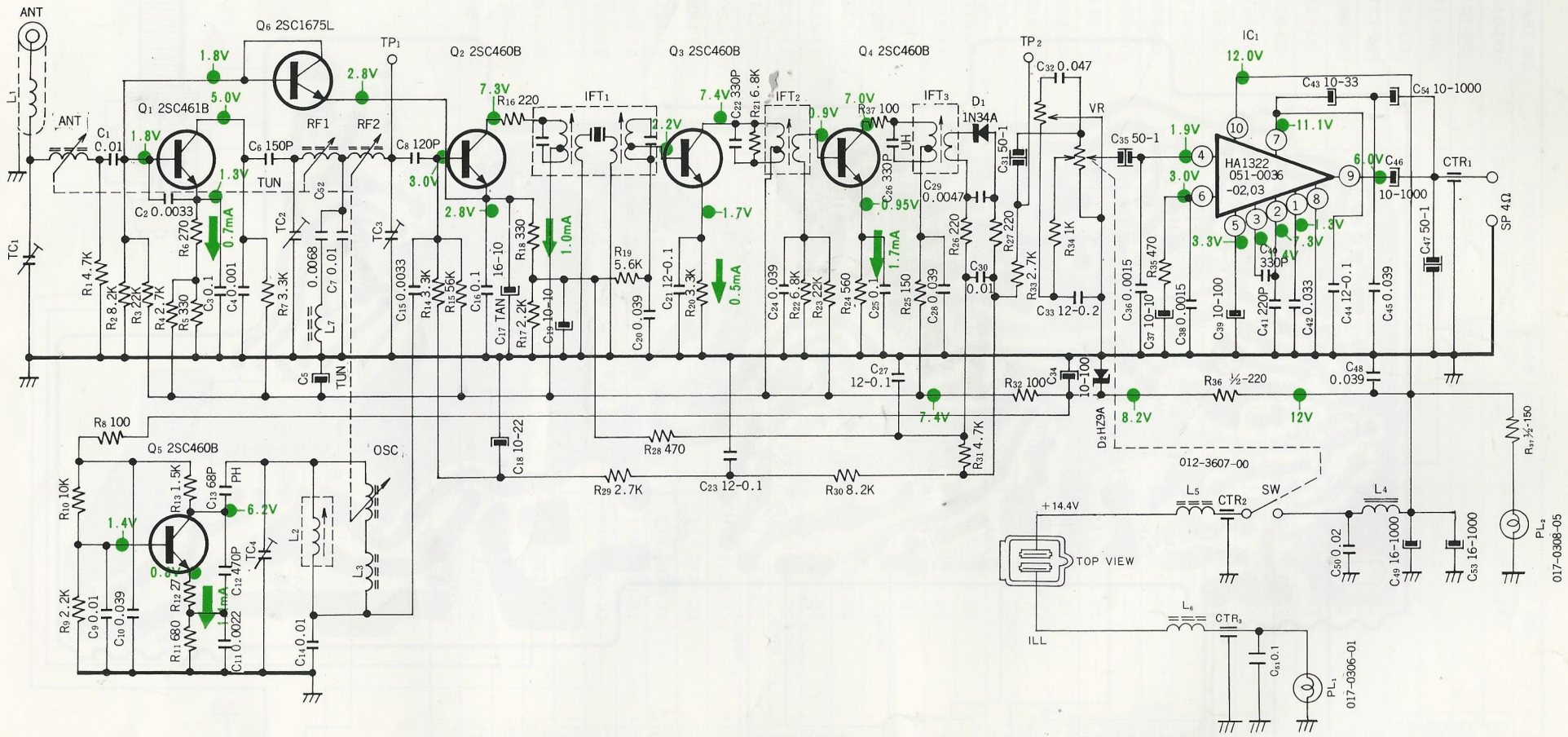
■CIRCUIT DIAGRAM: