Clarion Co., Ltd. Export Division—22-3, Shibuya 2-chome, Shibuya-ku, Tokyo, 150 Japan Tel: 03-3400-1121 Fax: 03-3400-8679 Telex: J22908, J22152
Service Dept.—50 Kamitoda, Toda-shi, Saitama, 335 Japan Tel: 0484-43-1111 Telex: J2962628 CLAFAC-J

Clarion Service Manual

Published by Service Administration Section

MAZDA Automobile Genuine Electronic Radio

Model RT-9196B,I RT-9197B,F,I

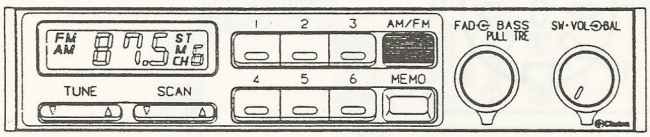

RT-9197

SPECIFICATIONS:

Tuning system: Electronic tuning (PLL synthesizer)
Receive range: AM (RT-9196) 531kHz to 1,602kHz (RT-9197) 530kHz to 1,620kHz
FM 87.5MHz to 107.9MHz
Intermediate frequency:
AM 450kHz
FM 10.7MHz
Quieting sensitivity: AM Less than 33dB (at 20dB S/N)
FM Less than 15dB (at 30dB S/N)
Separation: FM More than 20dB
Auto tuning stop sensitivity:
AM 35±6dB
FM 33±6dB
Load impedance: 4Ω×2
Power output: 10W×2 (at 3% distortion)
Power supply voltage: DC 13.2V, Negative ground
Current consumption: Less than 5A
Dimensions: Width 180mm
Height 35mm
Depth 160mm
Weight: 0.9kg

COMPONENT:

- RT-9196B-A (Genuine No. B574 66 AR0)
- RT-9196I-A (Genuine No. UE85 66 AR0)
- RT-9197B-A (Genuine No. WE81 66 AR0)
- RT-9197F-A (Genuine No. BTR1 66 AR0)
- RT-9197I-A (Genuine No. UE87 66 AR0)

Main unit 1

■REAR VIEW and CONNECTORS:

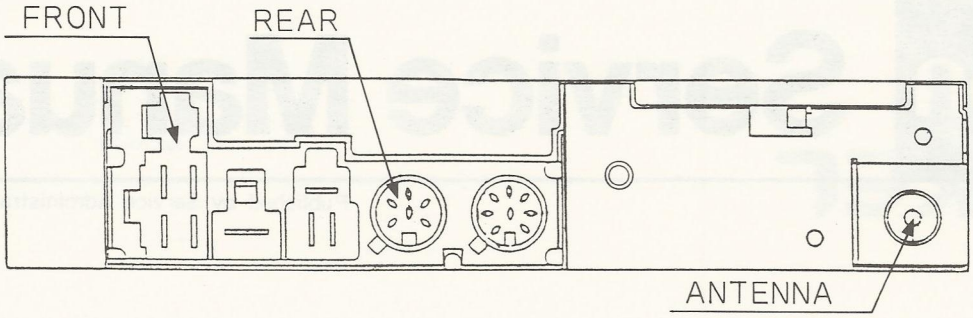

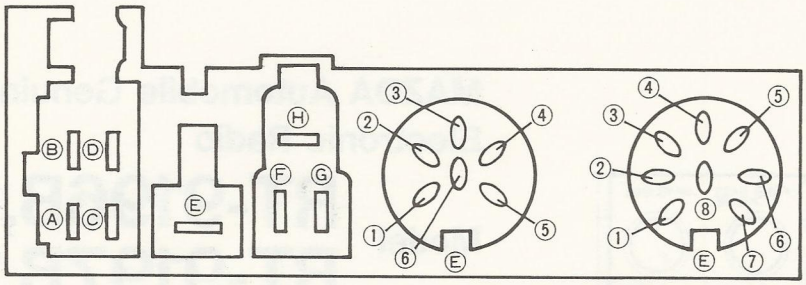

Ⓐ	SP. OUT Rch ⊕
Ⓑ	SP. OUT Lch ⊕
Ⓒ	SP. OUT Rch ⊖
Ⓓ	SP. OUT Lch ⊖
Ⓔ	+B (BACK UP)
Ⓕ	+13.2V (Acc)
Ⓖ	ILLUMINATION
Ⓗ	M. ANTENNA

①	OUTPUT Rch ⊕
②	+13.2V (AMP)
③	OUTPUT Lch ⊕
④	OUTPUT Rch ⊖
⑤	OUTPUT Lch ⊖
⑥	GND
Ⓔ	Shield earth

①	OUTPUT Lch ⊕
②	INPUT Lch ⊕
③	+13.2V (AMP)
④	ILLUMINATION
⑤	SIGNAL ⊖
⑥	INPUT Rch ⊕
⑦	OUTPUT Rch ⊕
⑧	
Ⓔ	Shield earth

■EXPLANATION OF IC's:

Refer to description in IC service manual vol. 1.			
μPC1230H2	051-0364-01	Power Amp.	P22
BT3S501	051-0606-00	TONE CONTROL	P23

Refer to description in IC service manual vol. 2.			
M51522AL	051-0301-02	DUAL PRE. AMPLIFIER	P18
MPX-NC-V	051-0633-00	MPX with Noise Canceller for FM	P10

■μPD1708AG(A)-913-00 051-0713-06
PLL Frequency Synthesizer & Controller

I. Outward Form

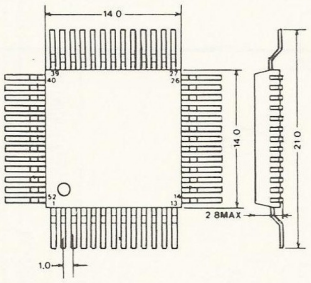

II. Terminal Description

Terminal No.	Symbol	Function
1~4 34~52	LCD1 ~ LCD23	LCD segment signal output terminals.
5 6	COM2 COM1	LCD common output terminals.
7 33	V_{DD}	Device power terminals that supply 5V±10% during the device operation.
8	FM	Input terminal to receive FM local oscillator output.
9	AM	Input terminal to receive AM local oscillator output.
10	GND	Connect this terminal to the ground.
11 12	EO1 EO2	Charge pump outputs of phase detector composing PLL. If any part divided from the oscillation frequency exceeds the reference frequency, the high-level signals are output from both terminals or the low-level signals in the reverse case or the floating starts when both coincide with each other.
13	CE	Device select signal input terminal, it must be set to the high level to drive the PLL or to the low level to stop it.
15 16	XI XO	4.5MHz crystal oscillators must be connected here.
17	AF MUTE	Muting signal output terminal, active high.
18	BAND/ DOLBY	RADIO mode: It can be used as the FM/AM band switching signal output terminal, the high level signal is output if the FM band is chosen or the low-level signal if the AM band is selected. TAPE mode: It can be used as the DOLBY ON/OFF signal output terminal, the high-level signal is output if "DD" is displayed on the LCD panel.
19 20	KS5/K5 KS1/K1	These can be used as the key return signal sources to read in the status of initialization diode matrix upon the initial power input (V_{DD} rise) or when returned from the back up condition (CE low to high) only. Otherwise these terminals function as the key return signal input terminals.
21 ~ 24	K3 ~ K0	Key return signal input terminals for key matrix.
25 ~ 28	KS3 ~ KS0	Key return signal output terminals.
29	RF MUTE METAL	RADIO mode: If any of the automatic tuning keys (SEEK DOWN, SEEK UP, SCAN DOWN, SCAN UP) is depressed, the high level is effected about 60ms later from the AF-MUTE and it is kept during the search. TAPE mode: It can be used as the METAL ON/OFF signal output terminal. The high-level signal is output while "MTL" is displayed on the LCD panel.
30	DX/MSS	RADIO mode: It can be used as the stop sensing control signal output terminal for automatic tuning. The low-level signal is output with "DX" displayed on the LCD panel. TAPE mode: It can be used as the MSS ON/OFF signal output terminal. The high-level signal is output while "MSS" is displayed on the LCD panel.
31	LOUDNESS	LOUDNESS signal output terminal, the high-level signal is output while "LOU" is displayed on the LCD panel.
32	RADIO POWER	When RADIO is ON, the high-level signal is output or the low-level if the switch is off.

III. Key Matrix

§1. Key Matrix Arrangement

Output Terminals \ Input Terminals	K5 (pin19)	K4 (pin20)	K3 (pin21)	K2 (pin22)	K1 (pin23)	K0 (pin24)
KS0 (pin28)	SEEK DOWN	SEEK UP	PRESET SCAN	LOUDNESS	OADJ	ME
KS1 (pin27)	MD	MU	M4	M3 (DOLBY)	M2 (METAL)	M1 (MSS)
KS2 (pin26)	SCAN DOWN	SCAN UP	M6	M5	RCAL	BAND
KS3 (pin25)			MODE	SD (REW)	STEREO (F/F)	RADIO ON/OFF
KS4 (pin20)			FMBND1	FMBND0	AMBND1	AMBND0
KS5 (pin19)			SELDSP	PRIORITY	RADSW	CLKSEL

Momentary switch Alternate or transistor switch Diode switch

§2. Initialization Diode Matrix

Eight diode matrices are provided for initialization, and the status of each matrix is read in only upon the initial power input to V_{DD} (Power-ON reset) or if the CE terminal level changes between low and high (CE reset); otherwise the status of diode matrices are ignored.

Symbol	Functions
FMBND1 FMBND0	Both are the switches to set the receive FM band frequency range and the channel spaces as shown below.

FMBND1	FMBND0	Frequency Range	Channel Space
0	0	87.9~107.9MHz	200kHz
0	1	87.5~107.9MHz	100kHz
1	0	76.0~ 90.0MHz	100kHz
1	1	87.604~107.900MHz	86kHz

Symbol	Functions
AMBND1 AMBND0	Switches to set the receive AM band frequency range and the channel spaces as shown below.

AMBND1	AMBND0	Frequency Range	Channel Space
0	0	530~1,620kHz	10kHz
0	1	530~1,620kHz	5kHz
1	0	522~1,629kHz	9kHz
1	1	531~1,602kHz	9kHz

Symbol	Functions
RADSW	Switch to select the radio power supply between the momentary key method and the alternate method. 0……Alternate (CE terminal to be used) 1……Momentary (CE terminal always set to high level and RADIO ON/OFF key to be used)
CLKSEL	Switch to select if the clock function is attached 0……Not attached 1……Attached
PRIORITY	Switch to select the priority display mode if the clock function is attached. 0……Clock display 1……Frequency display
CELDSP	Switch to select if clocks need be displayed when the clock function is attached and while RADIO is off 0……Blanks 1……Clock display

§ 3. Mode Switches

Unlike the initialization switches, the mode switches are always operable (in the table below "1" indicates the switch is turned ON or OFF if "0" is shown).

Symbol	Functions
MODE	To select either the RADIO mode or the TAPE mode; 1·····TAPE mode 0·····RADIO mode
SD (REW)	RADIO mode: It can be used as the station detector input under SEEK, SCAN and PRESET-SCAN. This must be turned off about 50ms after locking PLL. TAPE mode: It can be used as the tape direction display input switch. "◁" is displayed on the LCD panel when this switch is turned on.
STEREO (F/F)	RADIO mode: It can be used as the stereo signal input switch; when it is turned off, "ST" is displayed on the LCD panel but this display is kept out while the clocks are displayed or under the automatic tuning or PRESET-SCAN (the AF-MUTE terminal is active). TAPE mode: It can be used as the tape direction display input switch. "▷" is displayed on the LCD panel when this switch is turned on.

§ 4. Momentary Switch

Symbol	Functions
MU MD	Keys for the manual tuning or the clock adjustment. o Clock display With the MU or MD key depressed together with the ME key, the minute digit or the hour digit can be adjusted.
M1 ∫ M6	RADIO mode: These keys can be used to write into, or call, the preset memory. Both the FM and AM bands can be individually memorized by each key. TAPE mode: M1 to M3 can be used to switch MSS, METAL and DOLBY, the other keys M4 to M6 are invalid.
SEEK UP SEEK DOWN	Automatic tuning key to hold the current frequency even after the SD switch is turned off during the automatic tuning.
SCAN UP SCAN DOWN	Automatic tuning key to hold the current frequency for 5 seconds after the SD switch is depressed during the automatic tuning.
ME	Preset memory write key or it can be used to adjust the clock if it is displayed. Clock display mode: Both the "minutes" and "hours" digits can be adjusted by depressing either the MU or MD key together with this ME key.
0ADJ	This key can be used to set the clock on the hour.
BAND	To switch the frequency band from FM to AM with each depression.
PRESET SCAN	Automatic preset scan key to start the scanning from the channel next to the preset channel being received (or from M1 if no preset channels being received) and receive the preset channel for 5 seconds that is selected when the SD switch is turned off. The same preset channel can be continued by the PRESET SCAN key before the above period of 5 seconds elapses. The scanning continues even if the LOUDNESS, 0ADJ or ME key is depressed during the automatic preset scan mode, or the automatic preset scan stops if any other key is depressed, and it changes to the operation as specified by the depressed key.
LOUDNESS	To be used to switch LOUDNESS.
RCAL	Key to switch the display and valid under the RADIO mode only. With this key depressed, the clock display changes to the frequency display or vice versa. This key is invalid if no clocks are provided (CLKSEL=0).

■PARTS LIST:

◎Electrical section

REF NO.	PART NO.	DESCRIPTION	QTY
D101-103 201-203,606 611,801-808 811,812	001-0330-00 001-0294-00 001-0352-00	DIODE 1SS119 1SS133 1SS176	18
D809	001-0330-00 001-0294-00	DIODE 1SS119 *USE ONLY 1SS133 RT-9196	1
D601	001-0334-00	DIODE DSA17B	1
D602,604,605 607	001-0360-00	DIODE S5566B	4
D2	001-0377-47 001-0376-48 001-0377-48 001-0400-47 001-0400-48	DIODE MA4091M MTZ9.1JC MA4091H HZS9.1JB2 HZS9.1JB3	1
D608,609	001-0423-18 001-0421-18	DIODE MA4051 MTZJ5.1	2
D1,603,610 810	001-0423-24 001-0421-24	DIODE MA4091 MTZJ9.1	4
CHOKE602	009-0470-04	CHOKE *ACC	1
CHOKE601	009-0643-00	CHOKE *BACK UP	1
L101	010-2046-36	COIL 220μH	1
L201	010-2053-00 010-2053-50	COIL	1
RY601	014-0509-00	RELAY	1
C412,512	042-0334-25	ELECTRO-C 16V 47μF	2
C413-416 513-516	042-0342-00	ELECTRO-C 10V 100μF	8
C801	043-0197-00	CERAMIC-C 0.01μF	1
CCT801	050-0093-03 050-0093-63	COMPONENT-CCT	1
IC402	051-0301-02	IC M51522AL	1
IC403,404	051-0364-01	IC μPC1230H2	2
IC401	051-0606-70 051-0606-00	IC BT3S501	1
IC101	051-0633-00 051-0633-60	IC MPX-NC-V	1
IC801	051-0713-06	IC μPD1708AG(A)-913-00	1
SUP101	060-0122-01	SURGE PROTECTOR DSP-301N	1
X801	061-1037-00	CRYSTAL-OSC	1
Q804	102-1545-98	TRANSISTOR 2SC1545	1
Q101,102	102-2458-25 102-2785-49	TRANSISTOR 2SC2458Y 2SC2785HF	2
Q301,302,401 501,602 801,802,803	102-2458-50	TRANSISTOR 2SC2458GR	8
Q4,5,604	102-3402-00	TRANSISTOR 2SC3402	3
Q1-3,601,603	103-1225-18	TRANSISTOR 2SD1225M	5
Q805,806	103-1504-00	TRANSISTOR 2SD1504	2

REF NO.	PART NO.	DESCRIPTION	QTY
Q605,606	125-0003-02	TRANSISTOR RN2202	2
R604	111-3311-81	FILM-R 1/2W 330Ω	1
R701	114-1201-11	FILM-R 1W 12Ω	1
R702	114-1501-21	FILM-R 2W 15Ω	1
R3,4	114-4711-11	FILM-R 1W 470Ω	2
C103	160-3322-05	CERAMIC-C 3300PFB	1
C411,511	160-5612-05	CERAMIC-C 560PFB	2
C204	171-1033-06	CERAMIC-C 0.01μF	1
C104	171-6823-06	CERAMIC-C 0.0068μF	1
C805	173-1032-10	POLYESTOR-C 0.01μF	1
C417,418,517 518,601,602 610,701	173-1042-10	POLYESTOR-C 0.1μF	8
C111,112,202	173-2732-10	POLYESTOR-C 0.027μF	3
C203,804	173-5632-10	POLYESTOR-C 0.056μF	2
C102	173-6811-10	POLYESTOR-C 680PF	1
C101	174-1800-13	CERAMIC-C 18PF-CH	1
C201,802,803	174-2200-13	CERAMIC-C 22PF-CH	3
C402,502	179-1053-62	ELECTRO-C 50V 1μF	2
C303,304 401,406,501 506,614,808	179-1063-32	ELECTRO-C 16V 10μF	8
C613	179-1073-22	ELECTRO-C 10V 100μF	1
C604	179-1073-33	ELECTRO-C 16V 100μF	1
C1,305	179-1073-32	ELECTRO-C 16V 100μF	2
C109,110,301 302,409,509	179-2253-62	ELECTRO-C 50V 2.2μF	6
C606	179-2273-23	ELECTRO-C 10V 220μF	1
C113	179-2273-22	ELECTRO-C 10V 220μF	1
C609	179-2283-31	ELECTRO-C 16V 2200μF	1
C807	179-3363-22	ELECTRO-C 10V 33μF	1
C612	179-3373-22	ELECTRO-C 10V 330μF	1
C608	179-3373-33	ELECTRO-C 16V 330μF	1
C405,505	179-4743-62	ELECTRO-C 50V 0.47μF	2
C404,410,504 510,605	179-4753-62	ELECTRO-C 50V 4.7μF	5
C2,3,607,611	179-4763-22	ELECTRO-C 10V 47μF	4
C702,703	179-4763-32	ELECTRO-C 16V 47μF	2
C603	179-4773-33	ELECTRO-C 16V 470μF	1
C408,508	182-1046-62	ELECTRO-C 50V 0.1μF NP	2
C107,108	182-1056-62	ELECTRO-C 50V 1μF NP	2
C450,550	182-1063-33	ELECTRO-C 16V 10μF	2
C403,503	182-2243-62	ELECTRO-C 50V 0.22μF	2
C106	182-2246-62	ELECTRO-C 50V 0.22μF NP	1
C806	182-2256-52	ELECTRO-C 35V 2.2μF NP	1
C407,507	182-3346-62	ELECTRO-C 50V 0.33μF NP	2
C105	182-4756-32	ELECTRO-C 16V 4.7μF NP	1

■FM TUNER BLOCK: 880-1412C

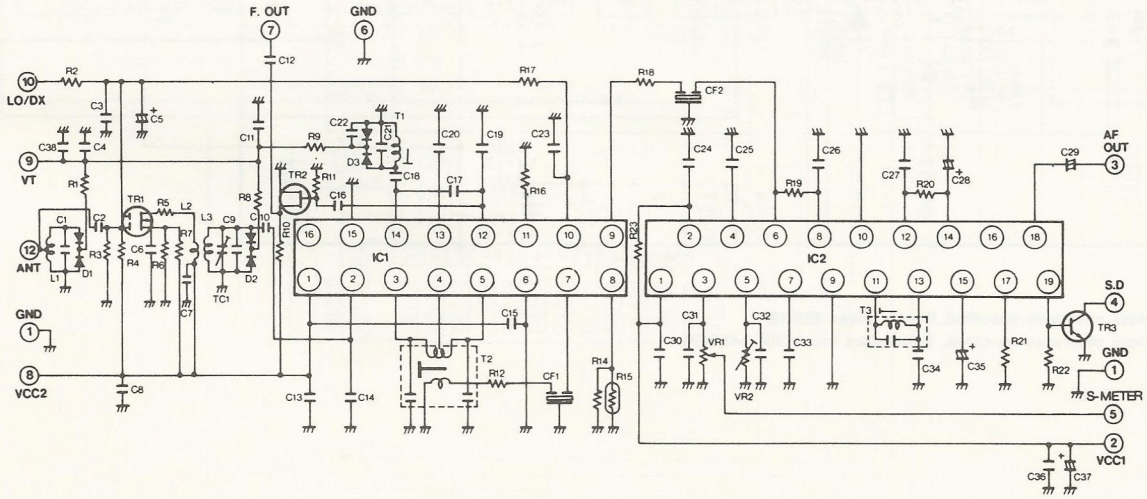

■AM TUNER BLOCK: 880-1510A (USE ONLY RT-9196)

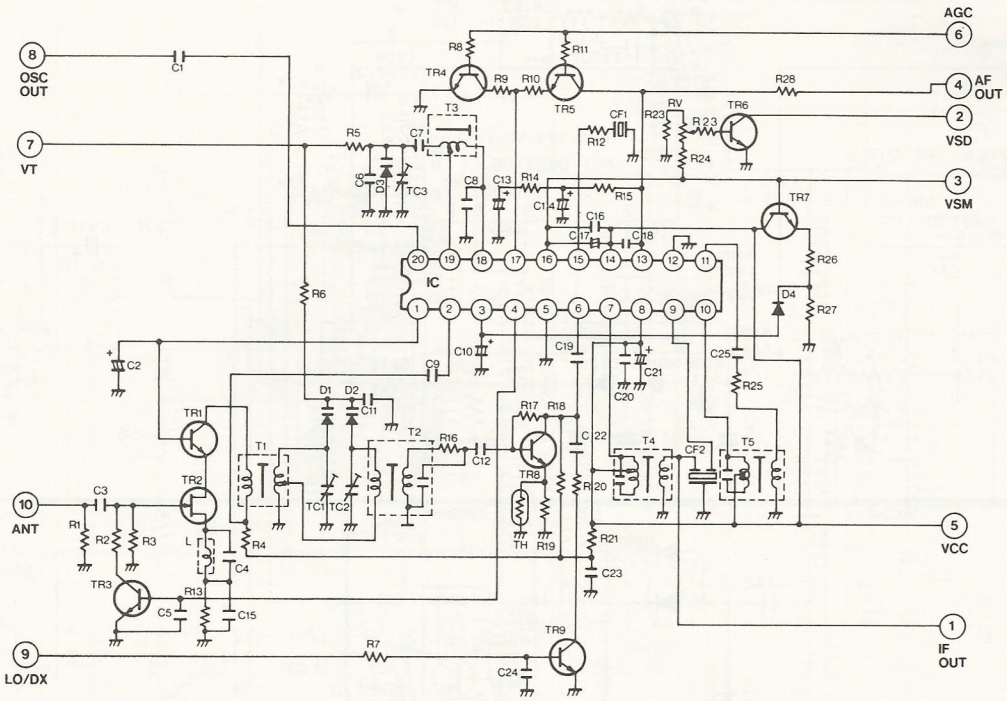

■AM TUNER PACK: 941-0141-03 (USE ONLY RT-9197)

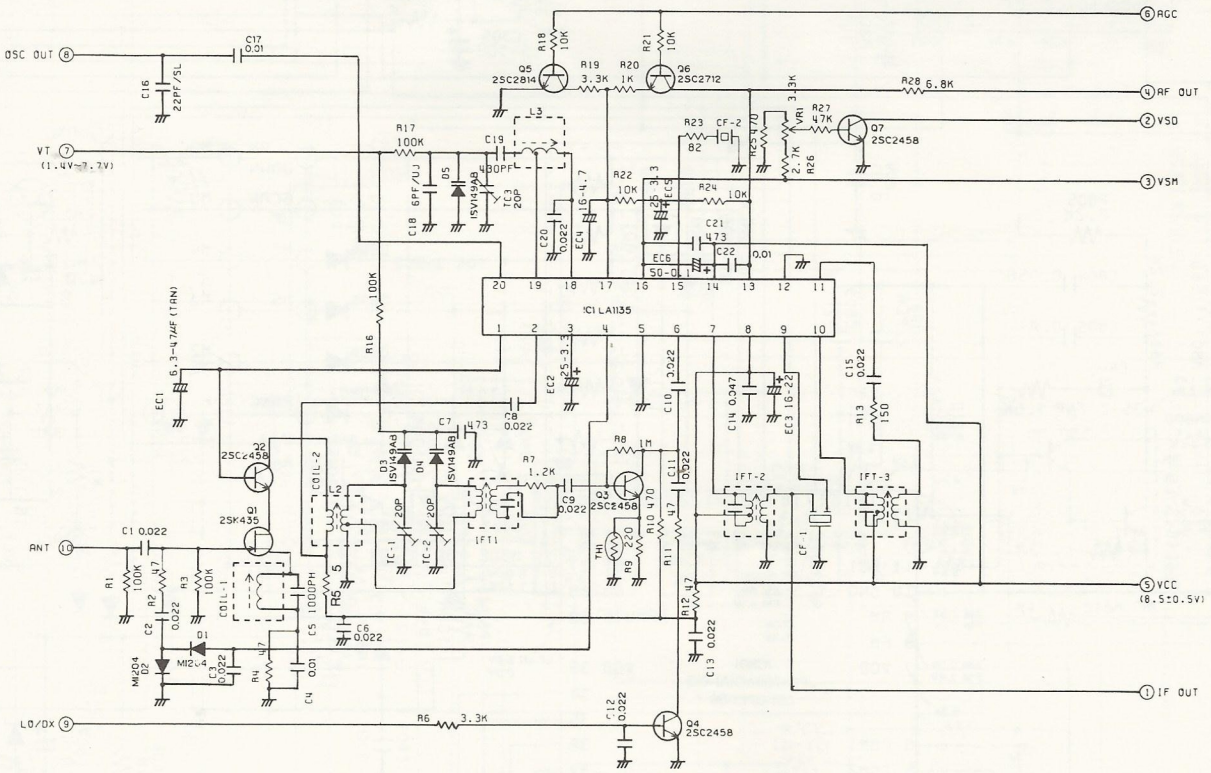

■CIRCUIT DIAGRAM:

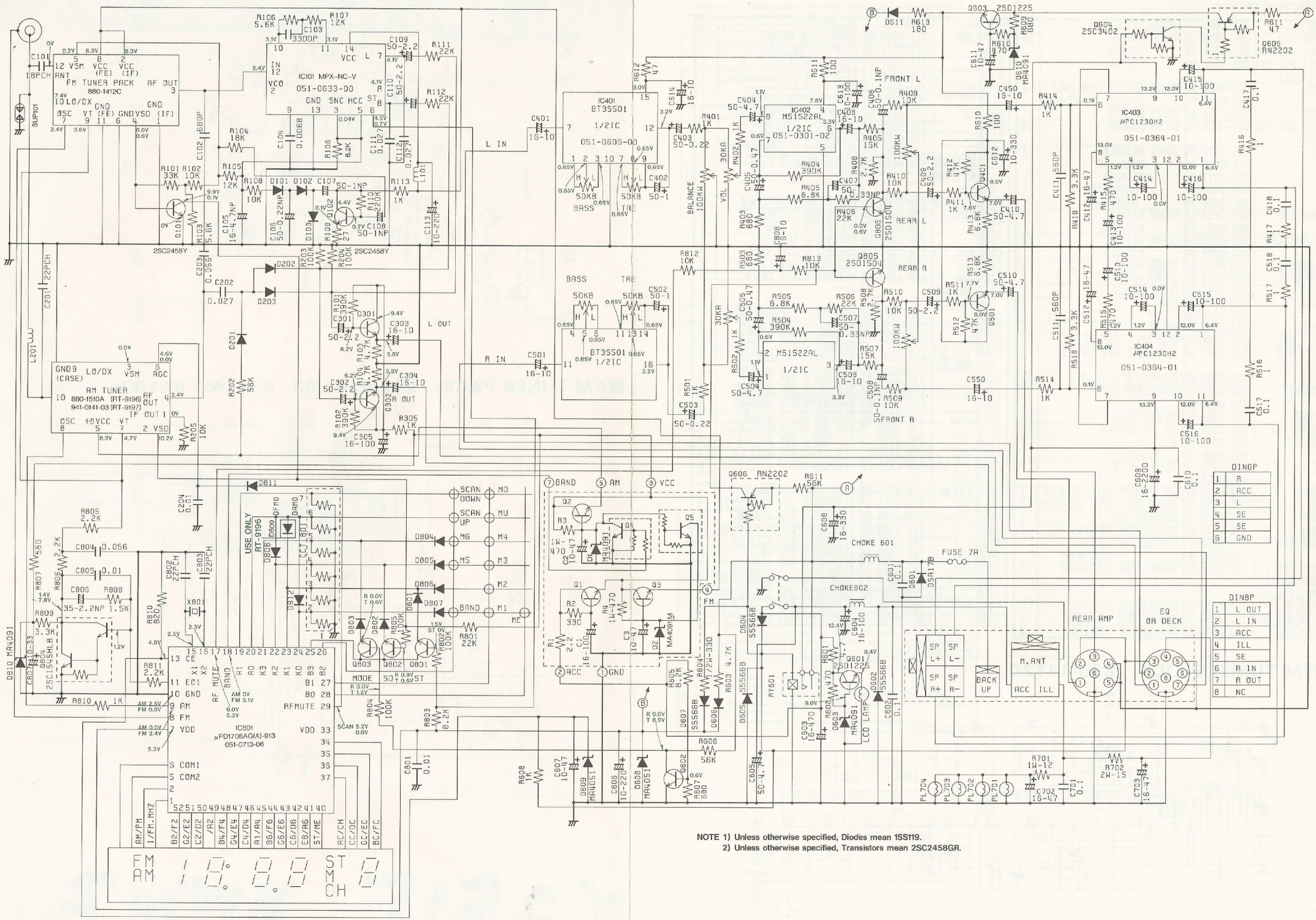

NOTE 1) Unless otherwise specified, Diodes mean 1SS119.
2) Unless otherwise specified, Transistors mean 2SC2458GR.

■PRINTED WIRING BOARD:

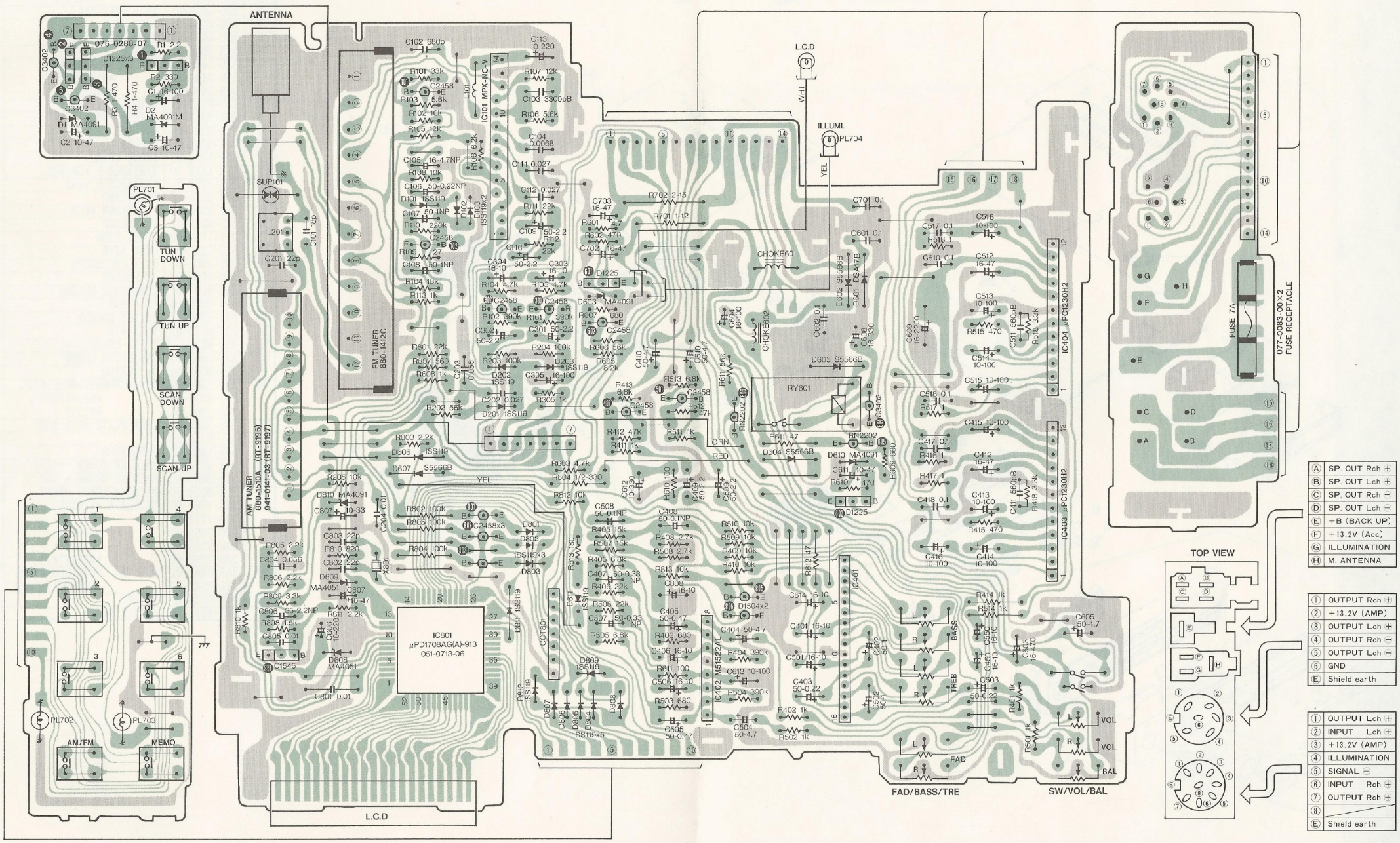

■EXPLODED VIEW • PARTS LIST:

◎Main section

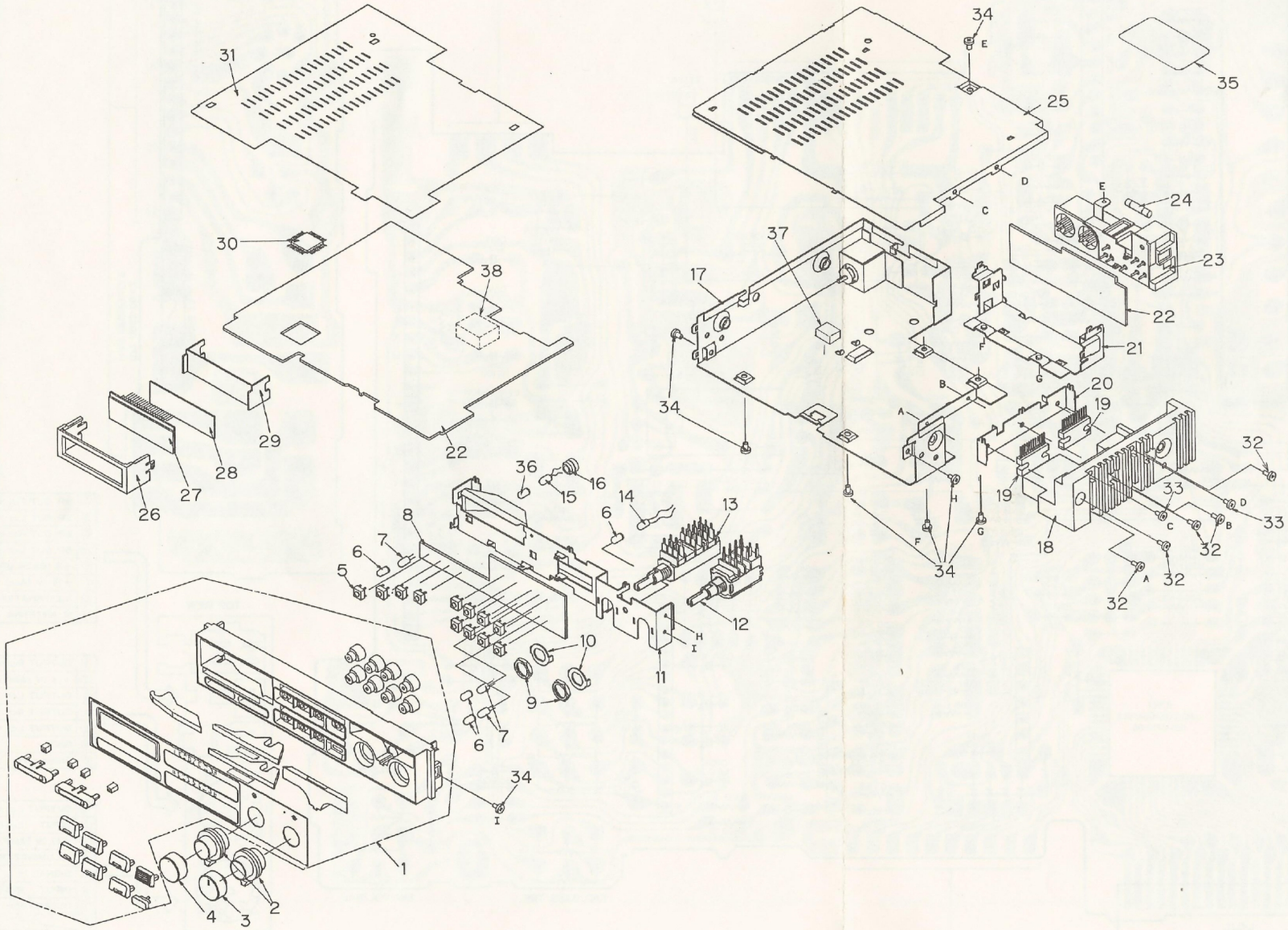

NO.	PART NO.	DESCRIPTION	QTY
1	940-1411A 940-1412A 940-1413A	ESCUTCHEON *9196B/9197B -ASSY *9196I/9197I *9197F	1
2	380-4646-01	KNOB *FAD/BAL	2
3	380-4634-01	KNOB *VOL	1
4	380-4635-07	KNOB *BASS	1
5	013-3694-00	SWITCH	12
6	345-3436-51 345-3436-17 345-3436-15	P.L CAP*9196B/9197B *9196I/9197I *9197F	4
7	017-0345-17	PILOTLAMP	3
8	099-7397-03	SWITCH PWB	1
9	722-0231-00	NUT *M9	2
10	745-0668-00	WASHER	2
11	308-1031-01	FRONT-COVER	1
12	012-4319-00	VARIABLE-R *SW.VOL	1
13	012-4320-00	VARIABLE-R *FAD	1
14	017-0345-35	PILOTLAMP	1
15	017-0346-03	PILOTLAMP *LCD	1
16	345-4040-02	PL HOLDER	1
17	311-1180-03	LOWER CASE	1
18	313-1222-00	HEAT SINK	1
19	051-0364-01	IC *μPC1230H2	2
20	330-8190-01	IC HOLDER	1
21	330-8191-01	CONNECTOR HOLDER	1
22	099-7389-05	MAIN PWB	1
23	074-0766-11	OUTLET SOCKET	1
24	120-0070-02	FUSE *7A	1
25	303-0325-04	UPPER-COVER	1
26	335-1963-01	INDICATOR COVER	1
27	379-0082-00	INDICATOR	1
28	335-1964-02 335-2770-00 335-1964-01	REFLECTOR*9196B/9197B *9196I/9197I *9197F	1
29	335-1965-01	BACK PLATE *LCD STOP	1
30	051-0713-06	IC	1
31	347-1803-03	INSULATOR	1
32	714-3014-80	MACHINE SCREW *M3X14	5
33	714-3008-80	MACHINE SCREW *M3X8	2
34	714-3004-80	MACHINE SCREW *M3X4	8
35	286-7757-00 286-7714-00 286-7758-00 286-7715-00 286-7759-00	SETPLATE *RT9196B *RT9196I *RT9197B *RT9197I *RT9197F	1
36	345-3842-02 345-3842-01	P.L CAP *RT9196B/9197B *RT9196I/9197I,F	1
37	345-3933-00	SPACER	1
38	330-8213-00	SHIELD COVER	1

Printed in Japan 298-4535-00 JAN. 1992 ©