Service Dept.—50 Kamitoda, Toda-shi, Saitama, 335 Japan Tel: 0484-43-1111 Telex: J2962628 CLAFAC-J

clarion Service Manual

Published by Service Administration Section

MAZDA Automobile Genuine Electronic Tuner

Model RT-9071A

SPECIFICATIONS:

Circuit system:	Superheterodyne
Tuning system:	Electronic tuning
Receive range:	AM 531kHz to 1,602kHz
	FM 87.5MHz to 107.9MHz
Intermediate frequency:	
	AM 450kHz
	FM 10.7MHz
Quieting sensitivity:	AM Less than 33dB (at 20dB S/N)
	FM Less than 15dB (at 30dB S/N)
Selectivity:	AM More than 35dB (at ±9kHz detune)
Separation:	AM More than 15dB
	FM More than 20dB
Fidelity: (Bass, Treble=flat) (NARROW)	AM 100Hz −3±3dB
	400Hz 0dB
	4kHz −14±5dB
	FM 100Hz 1±3dB
	1kHz 0dB
	7kHz −21±5dB
Auto tuning stop sensitivity:	
	AM DX 27dB to 43dB
	LO 47dB to 67dB
	FM DX 27dB to 39dB
Load impedance:	10kΩ
Output level:	75mV±3dB
Power supply voltage:	
	DC 13.2V (10.8V to 15.6V)
	Negative ground
Current consumption:	
	Less than 3A (at max. output)
Dimensions:	Width 180mm
	Height 35mm
	Depth 160mm
Weight:	950g

COMPONENTS:

● RT-9071A-A		
	Main unit	1
● RT-9071A-B		
	Main unit	1
● UT-854A-02		
ET-386A-51	POWER AMP	1
ET-386I-51	POWER AMP	1
ET-597A-02	EQUALIZER	1
RT-8052A-B	CAR STEREO	1
RT-9071A-A	CAR RADIO	1
● UT-854A-03		
ET-386A-51	POWER AMP	1
ET-386I-51	POWER AMP	1
ET-597A-02	EQUALIZER	1
PT-8052A-B	CAR STEREO	1
RT-9071A-B	CAR RADIO	1

■ADJUSTMENTS:

AM

Item	Adjustment	Measuring Instrument
Stop Sensitivity	1) Set the frequency to 999kHz and adjust the stop sensitivity to the specified level: DX — Stop Sensitivity 35dB — Adjustable VOL VR201	SG Milli-volt meter
Decoder Input	1) Connect the milli-volt meter to TP8. (TP9) 2) Set SG to 999kHz, 74dB. 3) Adjust the reading of milli-volt meter to 100mV±5mV by VR1. (inside the tuner pack)	SG Milli-volt meter

FM

Item	Adjustment	Measuring Instrument
0V Adjustment	(MAIN) 1) Connect the digital voltmeter to TP3 and TP4. 2) Input the non-modulated 98.1MHz/55dB signal and adjust the reading of digital voltmeter to 0±20mV by L104. (SUB) 1) Connect the digital voltmeter to TP1 and TP2. 2) Follow the same adjustment steps as MAIN above. (L102)	SG Digital voltmeter
IF Level	(MAIN) 1) Connect the digital voltmeter to TP6. 2) Input the 98.1MHz frequency at 15dB and adjust the level to 0.63±0.1V by VR102. (SUB) 1) Connect the digital voltmeter to TP5. 2) Adjust the level by VR101 similar to MAIN.	SG Digital voltmeter
SASC	1) Set SG to 98.1MHz and input the 30%-modulated frequency 7kHz, 65dB. 2) Adjust the SASC outputs evenly to −1dB by VR104 when the SG output is set to 40dB.	SG Milli-volt meter
Stop Sensitivity	1) Tuner at 98.1MHz, input a 33dB non-modulated SSG signal. 2) Adjust VR103 so that the voltage of the TP7 is less than 0.7±0.2V	SG Milli-volt meter

●ADJUSTMENT POINT

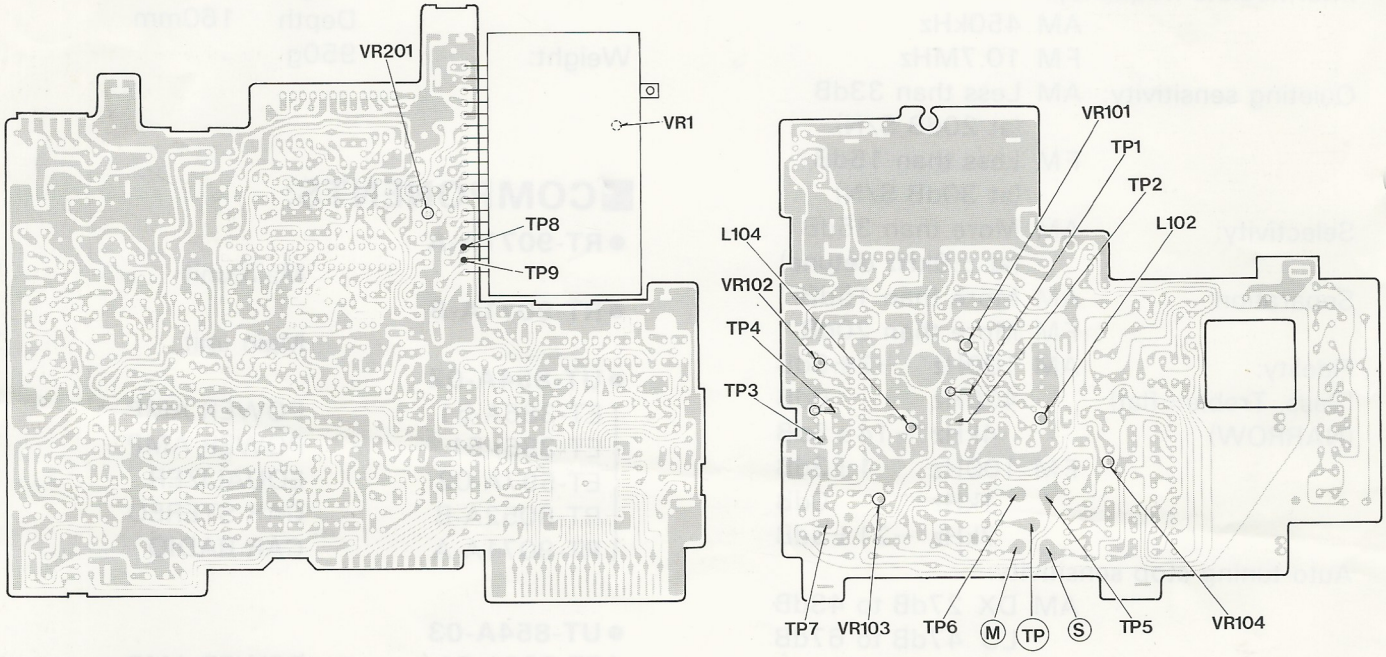

MAIN CHANNEL/SUB CHANNEL switching

(1) It can be switched to the main channel by shorting TP & M

(2) It can be switched to the sub channel by shorting TP & S

Refer to "Explanation of IC's VOL. 1" as following IC.			
BT3S501	051-0606-00	TONE CONTROL	P23

Refer to "Explanation of IC's VOL. 2" as following IC.			
TK15021	051-0772-00	Analog Switch	P47
NJM2073D	051-0774-00	Dual Low Voltage Power Amp.	P31
NJM2904S	051-0285-54	Dual OP Amp.	P39
MPX-NC-H	051-0632-01	MPX with Noise Canceller for FM	P10
μPD1708AG(A)903	051-0713-04	(051-0713-04 is modified from 051-0713-02)	P60

■MC13020P 051-0630-00 MOTOROLA CQUAM® AM STEREO MC13020P 051-0630-01 DECODER

NOTE : 051-0630-01 is useful instead of 051-0630-00.

This circuit is a complete one-chip full-feature AM stereo decoding and pilot detection system. It employs full-wave envelope signal detection at all times for the L+R signal, and decodes L−R signals only in the presencs of valid stereo transmission.

- No Adjustments, No Coils
- Few Peripheral Components
- True Full-Wave Envelope Detection for L+R
- PLL Detection for L−R
- 25Hz Pilot Presencs Required To Receive L−R
- Pilot Acquisition Time 300ms For Strong Signals, Time Extended For Noise Conditions To Prevent "Falsing"
- Internal Level Detector Can Be Used As AGC Source

MAXIMUM RATINGS

Rating	Symbol	Value	Unit
Supply Voltage	V_{CC}	14	Vdc
Pilot Lamp Current, Pin 15		50	mAdc
Operating Temperature	T_A	−40 to +85	°C
Storage Temperature	T_{stg}	−65 to +150	°C
Junction Temperature	$T_{J(max)}$	150	°C
Power Dissipation Derate above 25°C	P_D	1.25 10	W mW/°C

ELECTRICAL CHARACTERISTICS

(Vcc=8.0Vdc, T_A=25°C, Input Signal=200mVRMS Unmodulated Carrier, Circuit Of Figure 1 Unless Otherwise Noted.)

Characteristic		Min	Typ	Max	Unit
Power Supply Operating Range		—	6.0 ~ 12.0	—	Vdc
Supply Line Current Drain, Pin 6		20	30	40	mAdc
Input Signal Level, Unmodulated, Pin 3, for Full Operation		100	200	357	mVRMS
Audio Output Level, 50% Modulation, L only or R only		160	220	280	mVRMS
Audio Output Level, 50% Modulation, Monaural		80	110	140	mVRMS
Output THD, 50% Modulation	Monaural Stereo		0.5 1.0	+0.8 +1.5	%
Channel Separation, L only or R only, 50% Modulation		+22	30	—	dB
Pilot Acquisition Time VCO locked, after release of forced monaural		—	300	—	ms
Input Impedance	R_{in} C_{in}	20 —	27 6.0	— —	kΩ pF
Output Impedance		—	100	150	Ω
Level Detector Filter Voltage, Pin 4,	0 signal 200 mVRMS Signal	1.4 —	1.7 2.5	2.0 —	Vdc
Lock Detector Filter Voltage, Pin 10	In Lock Out of Lock	— —	7.8 0.8	— —	Vdc
Force to Monaural, Pin 9, Pull Down for Monaural Mode		2.0 —	2.5 0.15	— 1.0	Vdc μA
Force to Monaural, Pin 9, Pull Up for Automatic Mode		— —	3.5 < 0.001	3.7 1.0	Vdc μA

Fig. 1 – TYPICAL APPLICATION

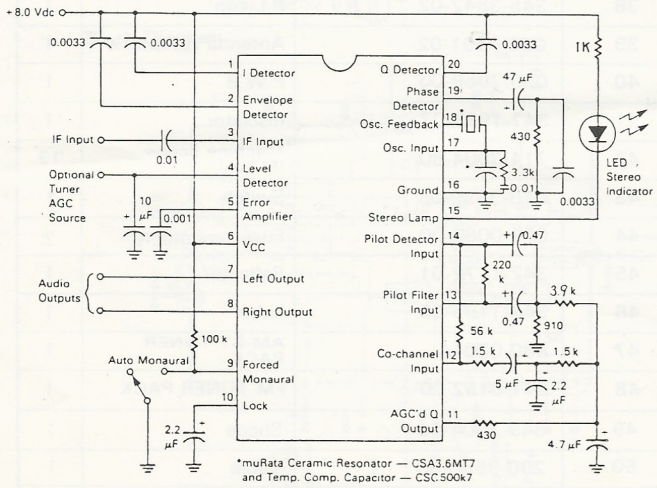

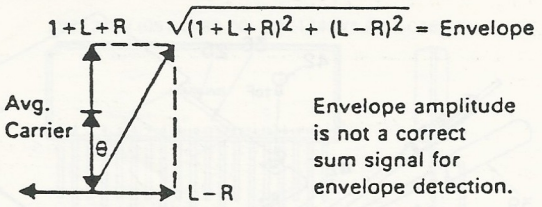

Envelope amplitude is not a correct sum signal for envelope detection.

Fig. 3 – MOTOROLA CQUAM®

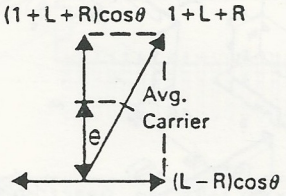

Envelope is compatible with existing monaural receivers.

Fig. 4 – BLOCK DIAGRAM

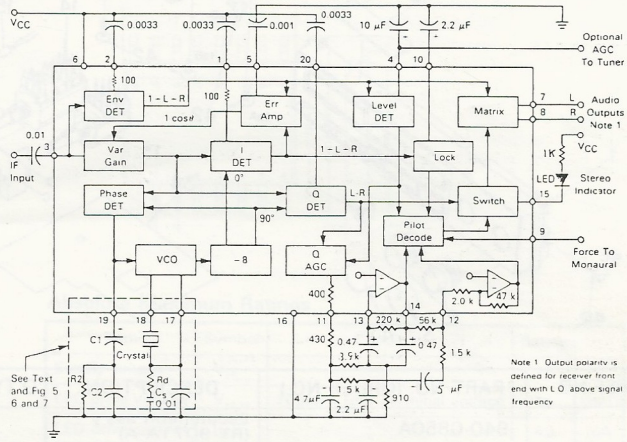

MOTOROLA CQUAM® – COMPATIBLE QUADRATURE AM STEREO

INTRODUCTION

In CQUAM®, conventional quadrature amplitude modulation has been modified by multiplying each axis by cosθ as shown in Figures 2 and 3. The resulting carrier envelope is 1+L+R, i.e., a correct sum signal for monaural receivers and for stereo receivers operating in monaural mode. A 25Hz pilot signal is added to the L−R information at a 4% modulation level.

THE DECODER

The MC13020P takes the output of the AM IF amplifier and performs the complete CQUAM® decoding function. In the absence of a good stereo signal, it produces an undegraded monaural output. Note in Figure 4 that the L+R information delivered to the output always comes from the envelope detector (Env DET).

The MC13020P decodes the stereo information by first converting the CQUAM® signal to QUAM, and then detecting QUAM. The conversion is accomplished by comparing the output of the Env DET and the I DET in the Err AMP. This provides the 1/cosθ correction factor, which is then multiplied by the CQUAM® incoming signal in the Var Gain block. Thus, the output of the Var Gain block is a QUAM signal, which can then be synchronously detected by conventional means. The I and Q detectors are held at 0° and 90° relative demodulation angles by reference signals from the phase-locked, divided-down VCO. The output of the I DET is 1−L+R, with the added benefit (over the Env DET) of being able to produce a negative output on strong co-channel or noise interference. This is used to tell the Lock circuit to go to monaural operation. The output of the Q DET is the L−R and pilot information.

THE VCO

The VCO operates at 8 times the IF input frequency, which ensures that it is out-of-band, even when a 260kHz IF frequency is used. Typically a 450kHz IF frequency is used with synthesized front ends. This places the VCO at 3.6MHz, which permits economic crystal and ceramic resonators. A crystal VCO is very stable, but cannot be pulled very far to follow front-end mistuning. Pull-in capability of = Hz at 450kHz is typical, and de-Q-ing with a resistor (see Figure 7) can increase the range only slightly. Therefore, the crystal approach can only be used with very accurate, stable front-ends. By comparison, ceramic and L−C VCO circuits offer pull-in range in the order of =2.5kHz (at 450kHz). Ceramic devices accurate enough to avoid trimming adjustment can be obtained with a matched capacitor for Cs (see Figures 1 and 5).

In the PLL filter circuit on Pin 19, C1 is the primary factor in setting a loop corner frequency of 8−10Hz, in-lock. An internally controlled fast pull-in is provided. R2 is selected to slightly overdamp the control loop, and C2 prevents high frequency instability.

The Level DET block senses carrier level and provides an optional tuner AGC source. It also operates on the Q AGC block to provide a constant amplitude of 25Hz pilot at Pin 11, and it delivers information to the pilot decoder regarding signal strength.

PILOT AND CO-CHANNEL FILTERS

The Q AGC output drives a low pass filter, made up of 400Ω internal, and 430Ω and 4.7μF external. From this point, an active 25Hz band-pass filter is coupled to the Pilot Decoder, Pin 14, and another low-pass filter is connected to the Co-channel Input, Pin 12. A 2:1 reduction of 25Hz pilot level to the Pilot Decode circuit will cause the system to go monaural, with the components shown. Refer to Figure 8 for the formulas governing the active band-pass filter. The co-channel input signal contains any low frequency intercarrier beat notes, and, at the selected level, prevents the Pilot Decode circuit from going into stereo. The co-channel input, Pin 12, gain can be adjusted by changing the external 1.5k resistor. The values shown set the "trip" level at about 7% modulation. The 25Hz pilot signal at the output of the active filter is opposite in phase to the pilot signal coming from the second low-pass filter. The 56k resistor from Pin 14 to Pin 12 causes the pilot to be cancelled at the co-channel input. This allows a more sensitive setting of the co-channel trip level.

THE PILOT DECODER

The Pilot Decoder has two modes of operation. When signal conditions are good, the decoder will switch to stereo after 7 consecutive cycles of the 25Hz pilot tone. When signal conditions are bad, the detected interference changes the pilot counter so as to require 37 consecutive cycles of pilot to go to stereo. In a frequency synthesized radio, the logic that mutes the audio when tuning can be connected to Pin 9. When this pin is held low it holds the decoder in monaural mode and switches it to the short count. This pin should be held low until the synthesizer and decoder have both locked onto a new station. A 300ms delay should be sufficient. If the synthesizer logic does not provide sufficient delay, the circuit shown in Figure 9 may be added. Once Pin 9 goes high, the Pilot Decoder starts counting. If no pilot is detected for seven consecutive counts, it is assumed to be a good monaural station and the decoder is switched to the long count. This reduces the possibility of false stereo triggering due to signal level fluctuation or noise. If the PLL goes out of lock, or interference is detected by the co-channel protection circuit before seven cycles are counted, the decoder goes into the long count mode. Each disturbance will reset the counter to zero. The Level Detector will keep the decoder from going into stereo if the IF input level drops 10dB, but will not change the operation of the pilot counter.

Once the decoder has gone into the stereo mode, it will go instantly back to monaural if either the lock detector on Pin 10 goes low, or if the carrier level drops below the preset threshold. Seven consecutive counts of no pilot will also put the decoder in monaural. In stereo, the co-channel input is disabled, and co-channel or other noise is detected by negative excursions of the I DET, as mentioned earlier. When these excursions reach a level caused by approximately 20% modulation of co-channel, the lock detector puts the system in monaural, even though the PLL may still actually be locked. This higher level of co-channel tolerance provides the hysteresis to prevent chattering in and out of stereo on a marginal signal.

When all inputs to the Pilot Decode block are correct, and it has completed its count, it turns on the Switch, sending the L−R to the Matrix, and switches the pilot lamp pin to a low impedance to ground.

SUMMARY

It should be noted that in CQUAM®, with both channels AM modulated, the noise increase in stereo is a maximum of 3.0dB, less on program material. Therefore, this is not the major concern in the choice of monaural to stereo switching point as it was in FM, and blend is not needed.

PIN DESCRIPTIONS

Pin 1, 2 – Detector Filters, Rout = 4.3k, recommend 0.0033μF to Vcc to filter 450kHz components.
Pin 3 – IF Signal Input.
Pin 4 – Level Detector filter pin, Rout = 8.2k, 10μF to ground sets the AGC time constant. High impedance output, needs buffer.
Pin 5 – Error Amp compensation to stabilize the Var Gain feedback loop.
Pin 6 – Vcc 6−12Vdc, suitable for low Vbatt automotive operation, but must be protected from "high line" condition.
Pin 7, 8 – Left and Right Outputs, NPN emitter followers.
Pin 9 – Forced Monaural, MOS or TTL controllable.
Pin 10 – Lock detector filter, Rout = 27k, recommend 2.2μF to ground.
Pin 11 – AGC'd Q output, NPN emitter follower with 400Ω from emitter to Pin 11.
Pin 12 – Co-channel Input, 1.5k series in and 56k feedback.
Pin 13 – Pilot Filter Input to op amp, see Figure 8.
Pin 14 – Pilot Decode Input (op amp output) emitter follower, Rout = 100Ω.
Pin 15 – Stereo Lamp, open-collector of an NPN common emitter stage, can sink 50mA, Vsat = 0.3V at 5.0mA.
Pin 16 – Ground
Pin 17 – Oscillator input, Rin = 10k, do not do connect to Pin 18 or ground.
Pin 18 – Oscillator feedback, NPN emitter, Rout = 100Ω.
Pin 19 – Phase Detector Output, current source to filter.
Pin 20 – Detector Filter, Rout = 4.3k, recommend 0.0033μF to Vcc to filter 450kHz.

Fig. 5 – CERAMIC VCO

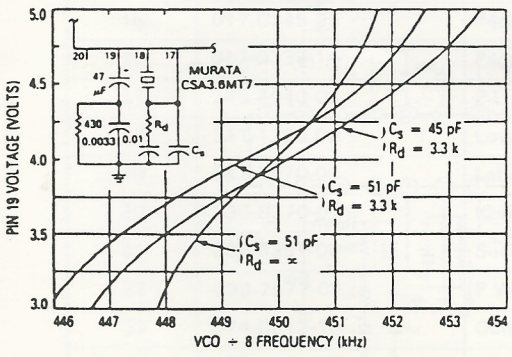

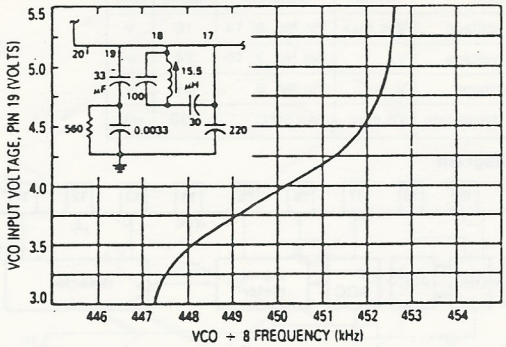

Fig. 7 – CRYSTAL VCO

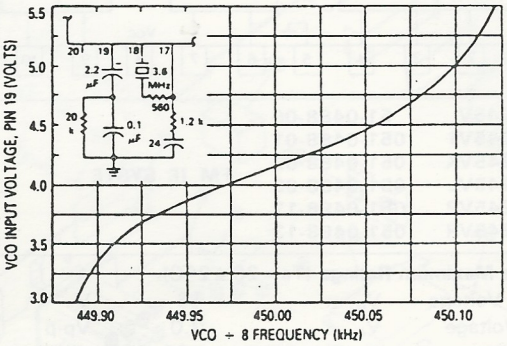

Fig. 8 – ACTIVE BAND-PASS FILTER

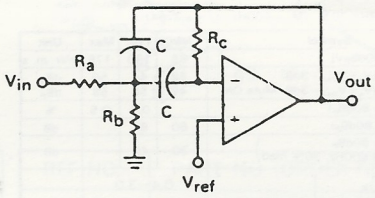

$$R_c = \frac{Q}{\pi f_o C}$$

$$R_a = \frac{R_c}{2 A_o}$$

$$R_b = \frac{R_a R_c}{4Q^2 R_a - R_c}$$

where, in this application
f_o = center frequency = 25Hz
A_o = gain at $f_o \leqslant 35$
$Q \leqslant 10$

Choose values for F_o, A_o, Q, and convenient C, solve for resistors

C ± 5%	Ra ± 5%	Rb ± 1%	Rc ± 1%
0.47μF	3.9k	910	220k
0.33μF	6.8k	1.3k	330k

Note: Capacitor C should be a good grade, low ESR.

Fig. 9 – FORCED MONAURAL OPTIONAL DELAY CIRCUIT

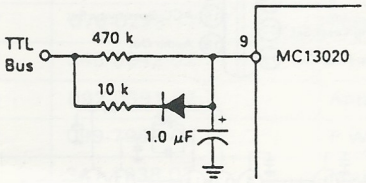

■LA1135 051-0634-00 / LA1135B 051-0634-01 AM Tuner

The part of electric specification is different between 051-0634-00 and 051-0634-01.
(Output level for signal meter output)

Outward Form

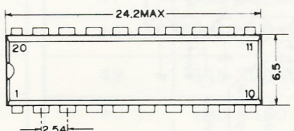

Performance

- MIX
- OSC (with ALC)
- IF amplification
- Detection
- AGC (Normal)
- RF wide bandwidth AGC
- Stop signal for auto search (Signal meter output)

Item	Symbol	Condition	Rating	Unit
Supply voltage	Vcc max	Pin No. 8, 14	16	V
Output voltage	V_o	Pin No. 7, 10	24	V
Input voltage	V_i	Pin No. 6	5.6	V
Power dissipation	Vd max	Ta≦50°C	730	mV

Block Diagram

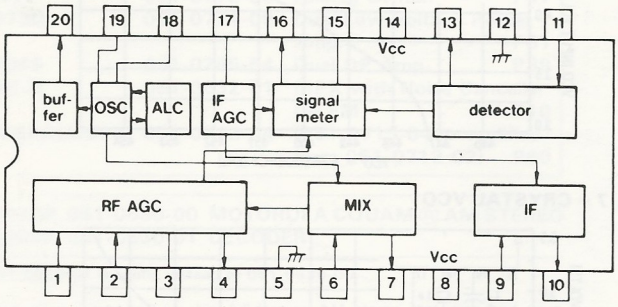

μPC1245V (051-0488-00), μPC1245V1 (051-0488-01)

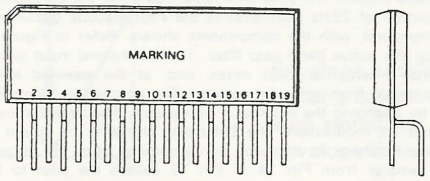

μPC1245VK (051-0488-02), μPC1245VL (051-0488-03)
μPC1245VP (051-0488-12), μPC1245VR (051-0488-13)

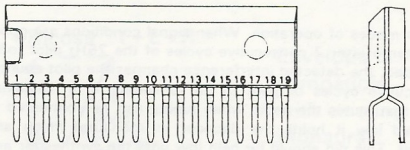

μPC1245V	51-0488-00	
μPC1245V1	051-0488-01	
■μPC1245VK	051-0488-02	FM IF SYSTE
μPC1245VL	051-0488-03	
μPC1245VP	051-0488-12	
μPC1245VR	051-0488-13	

Absolute Maximum Ratings (Ta = 25 ± 2°C)

Supply Voltage	V_{cc}	16	V
Input Voltage	V_i	3.0	Vp-p
Power Dissipation	P_D (Ta = 75°C)	430	mW

Electrical Characteristics

(Ta = 25 ± 3°C, Vcc = 10V, f = 10.7MHz, RH ≦ 70%, fM = 400Hz, Δf = ± 225KHz)

Item	Symbol		Min.	Typ.	Max.	Unit
Audio Frequency Out	V_{OAF} (V_i = 80dBμV)		85	130	175	mVr. m. s.
Limiting Sensitivity	V_i (limit)1 ($V_o = V_{OAF} - 3dB$) V_i (limit)2 ($V_o = V_{OAF} - 3dB$, Mute ON)		38 42	44 50	50 58	dBμ dBμ
Total Harmonic Distortion	T.H.D (V_i = 80dBμ)			0.1	0.5	%
Signal/Noise	S/N (V_i = V.80dBμ)		60	67		dB
A.M. Rejection Ration	A.M.R (V_i = 80dBμ AM:400Hz, 30% mod)		30	42		dB
Signal Meter Drive Out	μPC1245V μPC1245VK		0.4 ~ 3.0			V
	μPC1245V1 μPC1245VL	(Vi = 60dBμ)	0.95 ~ 1.3			V
	μPC1245VP		0.95 ~ 1.2			V
	μPC1245VR		1.1 ~ 1.35			V
A.G.C Out	V_{AGC1} (V_i = 0dBμ, V_{in} = 3.0V) V_{AGC2} (V_i = 100dBμ, V_{in} = 3.0V)		9.0	 0.1	 0.5	V V
A.F.C Out	V_{AFC} (V_i = 80dBμ)		4.6	5.2	5.8	V

Terminal Conection

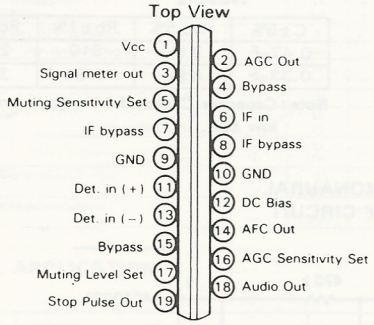

Block Diagram

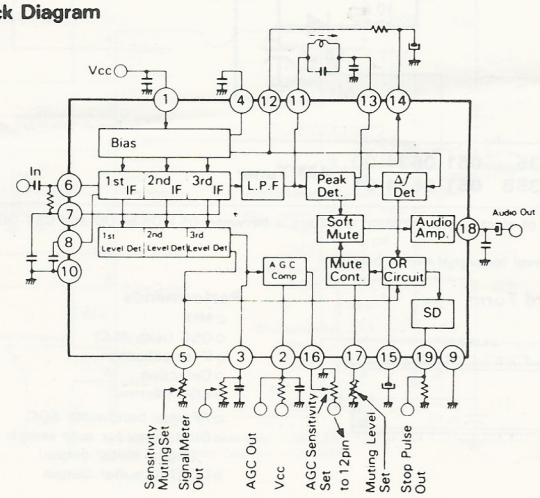

■μPC1266G 051-0541-00 Diver Control SW.

Outward Form

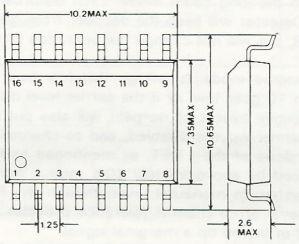

Absolute Maximum Ratings

Item	Symbol	Condition	Rating	Unit
Supply voltage	V_{CC}		16	V
LED drive voltage	$V_{10.11}$	10pin, 11pin Terminal voltage	16	V
LED drive current	$I_{10.11}$		40	mA
Power dissipation	Pd		250	mW

Terminal Connection

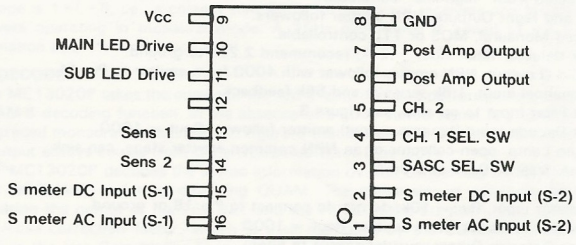

Equivalent Circuit

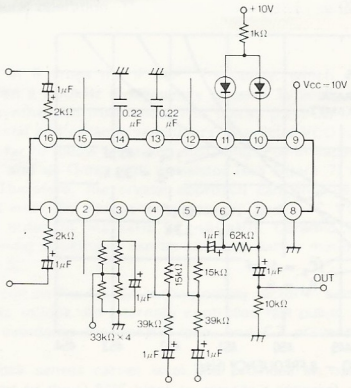

■EXPLODED VIEW • PARTS LIST: ◎Main section

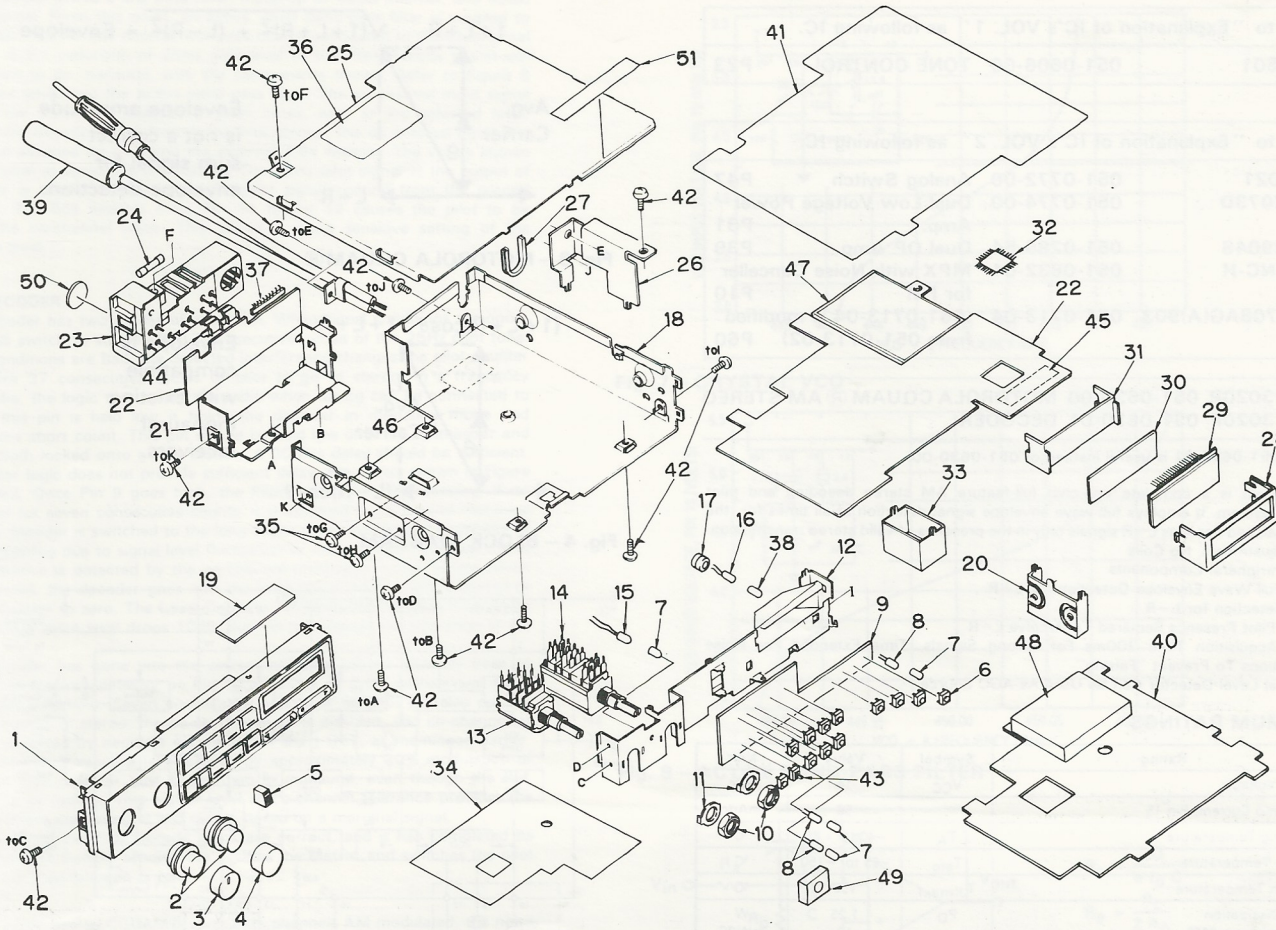

REF.NO.	PART NO. (ORDER NO.)	DESCRIPTION	Q'TY
1	940-0850A	Escutcheon ass'y (RT-9071A-A)	1
	940-0849A	Escutcheon ass'y (RT-9071A-B)	
2	380-4646-01	Knob (BAL, FAD)	2
3	380-4635-05	Knob (VOL)	1
4	380-4634-01	Knob (BASS)	1
5	382-0970-03	Button (BW)	1
6	013-3694-00	Switch	12
7	345-3436-17	P.L cap	4
8	017-0345-17	Pilot lamp	3
9	099-7578-00	P.W.B	1
10	722-0231-00	Nut	2
11	745-0668-00	Washer	2
12	308-1041-01	Front cover	1
13	012-4319-00	Variable resistor (VOL)	1
14	012-4320-01	Variable resistor (BASS)	1
15	017-0345-35	Pilot lamp	1
16	017-0339-14	Pilot lamp	1
17	345-4040-02	P.L holder	1
18	311-1225-00	Lower case	1
19	347-1570-01	Label (RT-9071A-A)	1
20	330-8370-01	IC holder	1
21	330-8351-00	Socket holder	1
22	099-7577-05	P.W.B	1
23	074-0813-10	Outlet socket	1
24	120-0030-02	Fuse (3A)	1

REF.NO.	PART NO. (ORDER NO.)	DESCRIPTION	Q'TY
26	330-8371-01	Bracket	1
27	345-4191-00	Lead holder	1
28	335-1963-01	LCD cover	1
29	379-0082-00	Indicator	1
30	335-1964-02	Reflector	1
31	335-1965-01	LCD holder	1
32	051-0713-00	IC (μPD1708G)	1
33	330-8372-00	Shield case	1
34	347-1939-00	Insulator	1
35	714-3004-80	Machine screw (M3x4)	2
36	286-5770-00	Set plate	1
37	076-0288-12	Plug	1
38	345-3842-02	P.L cap	1
39	092-0591-02	Antenna receptacle	1
40	099-7959-03	P.W.B	1
41	347-1938-02	Insulator	1
42	714-3004-80	Machine screw (M3x4)	12
43	013-3699-05	Switch	1
44	077-0083-00	Fuse receptacle	2
45	347-1172-01	Reflector	1
46	347-1195-00	Label	1
47	880-0004A	AM-ST TUNER PACK	1
48	941-0152-00	FM TUNER PACK	1
49	345-3904-00	Shade	1
50	290-3560-00	Label	1

◎Electrical section
◎MAIN P.W.B

OM (Oxidized Metal) SS (Super Small)
S (Small) TC (Temperature-Compensating)
HD (Higher Dielectric) LL (Low Leak)
SC (Semi-Conductor) USS (Ultra Super Small)

REF.NO.	PART NO.	DESCRIPTION	Q'TY
D501,502,504 506,507,802 804~813 901	001-0330-00 (001-0294-00) (001-0352-00)	Diode 1SS119 Diode (1SS133) Diode (1SS176)	17
D902,903,904 905,907	001-0360-00 (001-0477-00)	Diode S5566B Diode (DSF10B)	5
D807	001-0423-19 (001-0425-19)	Diode MA4056 Diode (HZS5.6J)	1
D201,202,801 906	001-0423-24 (001-0425-24)	Diode MA9041 Diode (HZS9.1J)	4
L 902	009-0470-02	Choke	1
L 901	009-0625-00	Choke	1
L 202	010-2052-00	Coil	1
VR	012-4319-00	Variable resistor SW.VOL	1
VR	012-4320-01	Variable resistor B/T FAD	1
VR201	012-4431-02	Variable resistor 1kΩ	1
VR202	012-4431-09	Variable resistor 47kΩ	1
VR203	012-4431-10	Variable resistor 100kΩ	1
PL6	017-0339-14	Pilot lamp (BLK)	1
PL5	017-0345-35	Pilot lamp (YEL)	1
C207	042-0174-00	Electrolytic capacitor 16V4.7μF TAN	1
C211	042-0176-00	Electrolytic capacitor 16V10μF TAN	1
CCT1	050-0093-03	Component circuit 33kΩx9	1
IC201	051-0190-00	IC C-Z2	1
IC501	051-0606-00 (051-0606-50)	IC BT3S501 IC (PA-S-0159)	1
IC202	051-0651-00	IC C-Z2	1
IC801	051-0713-04	IC μPD1708AG(A)903	1
IC502	051-0772-00	IC TK15021	1
IC503	051-0774-00	IC NJM2073D	1
X801	061-1037-00	Crystal	1
Q802	100-1048-50 (100-1317-50)	Transistor 2SA1048Y,GR Transistor (2SA1317-STU)	1
Q506	101-0911-00	Transistor 2SB911MPQR	1
Q801	102-1545-02	Transistor 2SC1545B	1
204,205,301 401,505,601 Q602,701,702 803,804,805 807,903	102-2458-50 (102-3330-50)	Transistor 2SC2458Y,GR,BL Transistor (2SC3330-STU)	14
Q501,502	103-1504-05 (103-1450-20)	Transistor 2SD1504-E,TZ Transistor (2SD1450T)	2
206,207,901 Q902,905,906 907	103-1225-50 (103-0973-50)	Transistor 2SD1225M-QR Transistor (2SD973A-RS)	7

REF.NO.	PART NO.	DESCRIPTION	Q'TY
Q504,806	125-0003-03 (100-1346-00)	Transistor RN2203 Transistor (2SA1346-AC)	2
Q904	125-2003-02 (102-3404-00)	Transistor RN1202 Transistor (2SC3402-AC)	1
Q203	125-2003-03 (102-3400-00)	Transistor RN1203 Transistor (2SC3400AC)	1
Q201,202	125-2003-96	Transistor RN1206	2
R911	111-1011-82	Film resistor 1/2W100Ω	1
R912	114-1201-11	Film resistor 1W12Ω OM	1
R903,905	114-3311-11	Film resistor 1W330Ω OM	2
C606,706,813	160-1522-05	Ceramic capacitor 1500pF B HD	3
C 208,212	171-1033-06	Ceramic capacitor 0.01μF SC	2
C206	171-3323-96	Ceramic capacitor 3300pF SC	1
C802,807,811 812	173-1032-10	Polyester capacitor 0.01μF S	4
C202,801,912 914,918	173-1042-10	Polyester capacitor 0.1μF S	5
C203,204	173-2232-10	Polyester capacitor 0.022μF S	2
C216,217	173-5632-10	Polyester capacitor 0.056μF S	2
C218,219	173-6832-10	Polyester capacitor 0.068μF S	2
C805,806	174-2209-13	Ceramic capacitor 22pF TC	2
C205	174-3909-13	Ceramic capacitor 39pF TC	1
C915	179-1073-33	Electrolytic capacitor 16V100μF S	1
C908,909	179-1083-33	Electrolytic capacitor 16V1000μF S	2
C913	179-2263-49	Electrolytic capacitor 25V22μF S	1
C809	179-2273-21	Electrolytic capacitor 10V220μF S	1
C917	179-2273-32	Electrolytic capacitor 16V220μF S	1
C903	179-3373-33	Electrolytic capacitor 16V330μF S	1
602~605 609~612 C702~705 709~712 803,808,910	182-1053-62	Electrolytic capacitor 50V1μF SS	19
C214,215	182-1056-62	Electrolytic capacitor 50V1μF NP SS	2
210,213,220 C221,302,402 503,511,601 608,701,708	182-1063-32	Electrolytic capacitor 16V10μF SS	12
C222,223,607 707	182-1073-22	Electrolytic capacitor 10V100μF SS	4
C902,904,905	182-1073-32	Electrolytic capacitor 16V100μF SS	3
C301,401	182-2253-69	Electrolytic capacitor 50V2.2μF SS	2
C153,505,512	182-2263-32	Electrolytic capacitor 16V22μF SS	3
C804,810	182-3363-29	Electrolytic capacitor 10V33μF SS	2
501,502,504 C508,901,911 916	182-3363-32	Electrolytic capacitor 16V33μF SS	7
C209	182-4763-32	Electrolytic capacitor 16V47μF SS	1

◎FM P.W.B

REF.NO.	PART NO.	DESCRIPTION	Q'TY
D101,102,503 504	001-0330-00	Diode 1SS119	4
	(001-0352-00)	Diode (1SS176)	
D103	001-0376-48	Diode MTZ9.1JB	1
	(001-0337-47)	Diode (MA4091M)	
	(001-0337-48)	Diode (MA4091H)	
	(001-0400-47)	Diode (HZS9.1JB2)	
ZNR1,2	001-0365-00	Diode ERZ-D03DK331	2
IFT101,102	005-0967-00	IF-transformer MS3L	2
L 106	010-2046-17	Coil VT	1
L 101	010-2046-26	Coil F-END	1
L 103,105	010-2046-36	Coil IF	2
L 201	010-2053-00	Coil AM-ANT	1
L 102,104	010-2092-02	Coil IF-DET	2
VR101,102	012-3808-01	Variable resistor	2
VR104	012-4431-08	Variable resistor	1
VR103	012-4431-10	Variable resistor SD 100kΩ	1
PL1,2	017-0321-01	Pilot lamp NEON	2
IC104	051-0285-54	IC NJM2904S	1
IC101,102	051-0488-12	IC μPC1245V-P	2
	(051-0448-13)	IC (μPC1245V-R)	
IC103	051-0541-00	IC V728	1
IC105	051-0632-01	IC NC-MPX	1
Q102	102-2458-00	Transistor 2SC2458	1
	(102-2785-10)	Transistor (2SC2785)	
	(102-3330-00)	Transistor (2SC3330)	
Q103	102-3420-00	Transistor 2SC3420-Y,G,BL	1
	(102-2594-00)	Transistor (2SC2594)	

REF.NO.	PART NO.	DESCRIPTION	Q'TY
Q503	125-0003-03	Transistor RN2203	1
	(100-0346-00)	Transistor (2SA1346-AC)	
Q101	125-2003-06	Transistor RN1206	1
C115,130	160-3312-05	Ceramic capacitor 330pF B HD	2
C142	160-5622-05	Ceramic capacitor 5600pF B HD	1
C114,129,132 136,143	171-1023-06	Ceramic capacitor 1000pF SC	5
C102,103,106 109,110,112 117,118,121 124,125,127	171-2233-06	Ceramic capacitor 0.022μF SC	12
C141	171-3323-06	Ceramic capacitor 0.0033μF SC	1
C150	173-1021-10	Polyester capacitor 0.001μF S	1
C101	173-1041-19	Polyester capacitor 0.1μF S	1
C147,148	173-3931-10	Polyester capacitor 0.039μF S	2
C151	173-6821-10	Polyester capacitor 0.0068μF S	1
C105,120	174-1007-37	Ceramic capacitor 10pF RH TC	2
C201	174-2207-13	Ceramic capacitor 22pF CH TC	1
C103,119	174-4707-37	Ceramic capacitor 47pF RH TC	2
C144	179-2273-31	Electrolytic capacitor 16V220μF S	1
C153	179-3373-33	Electrolytic capacitor 16V330μF S	1
C108,111,123 126,133,134 145,146,506 507	182-1053-69	Electrolytic capacitor 50V1μF SS	10
116,131,137 509	182-1063-39	Electrolytic capacitor 16V10μF SS	4
C113,138,139 152	182-2263-29	Electrolytic capacitor 10V22μF SS	4
C107,122	182-4743-69	Electrolytic capacitor 50V0.47μF SS	2
C510	182-4753-59	Electrolytic capacitor 35V4.7μF SS	1
C135	182-4763-02	Electrolytic capacitor 4V47μF SS	1
C140,149	182-4763-29	Electrolytic capacitor 10V47μF SS	2
C128	183-2263-32	Electrolytic capacitor 16V22μF USS	1

■CIRCUIT DIAGRAM:

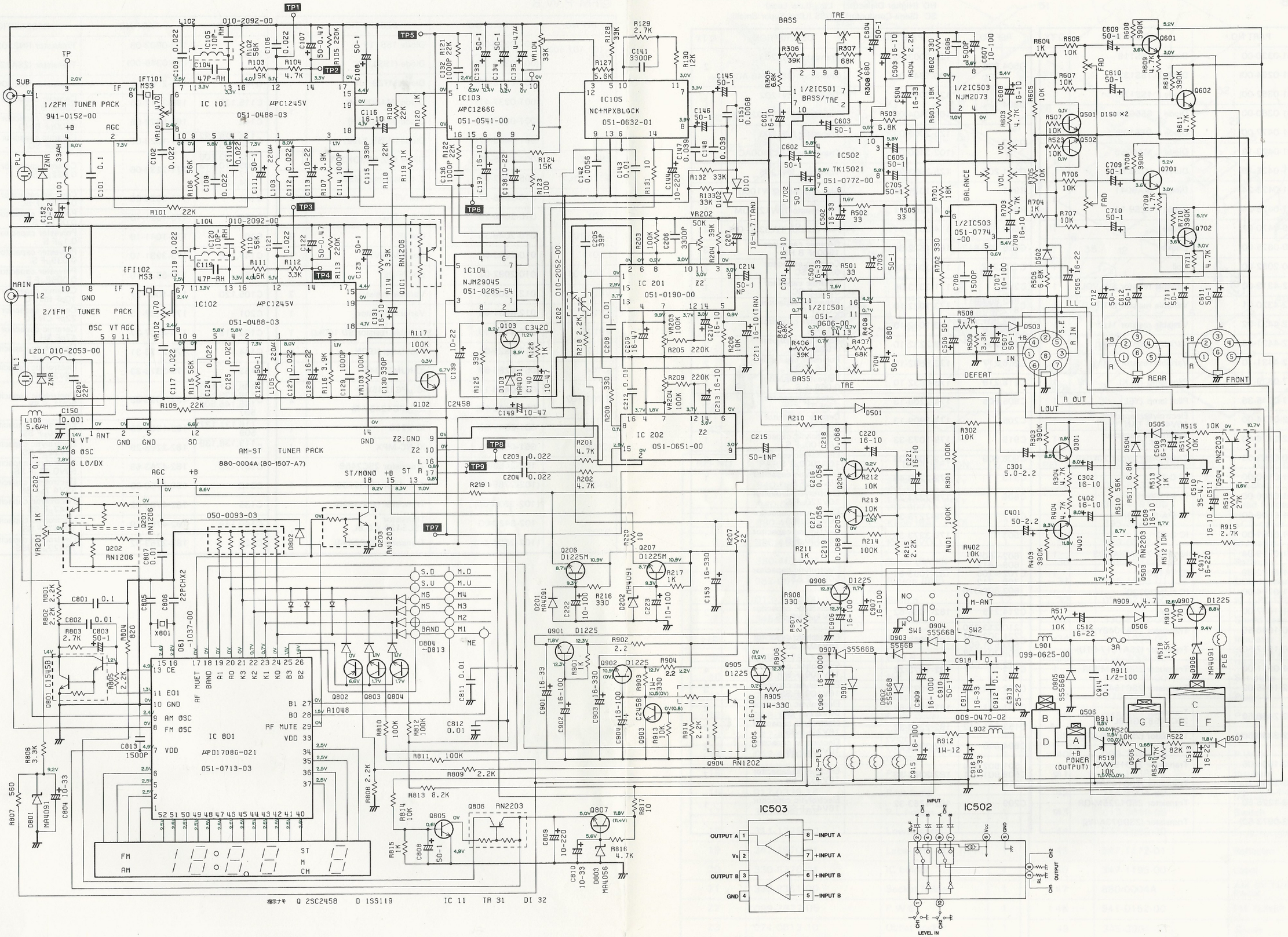

■PRINTED WIRING BOARD:

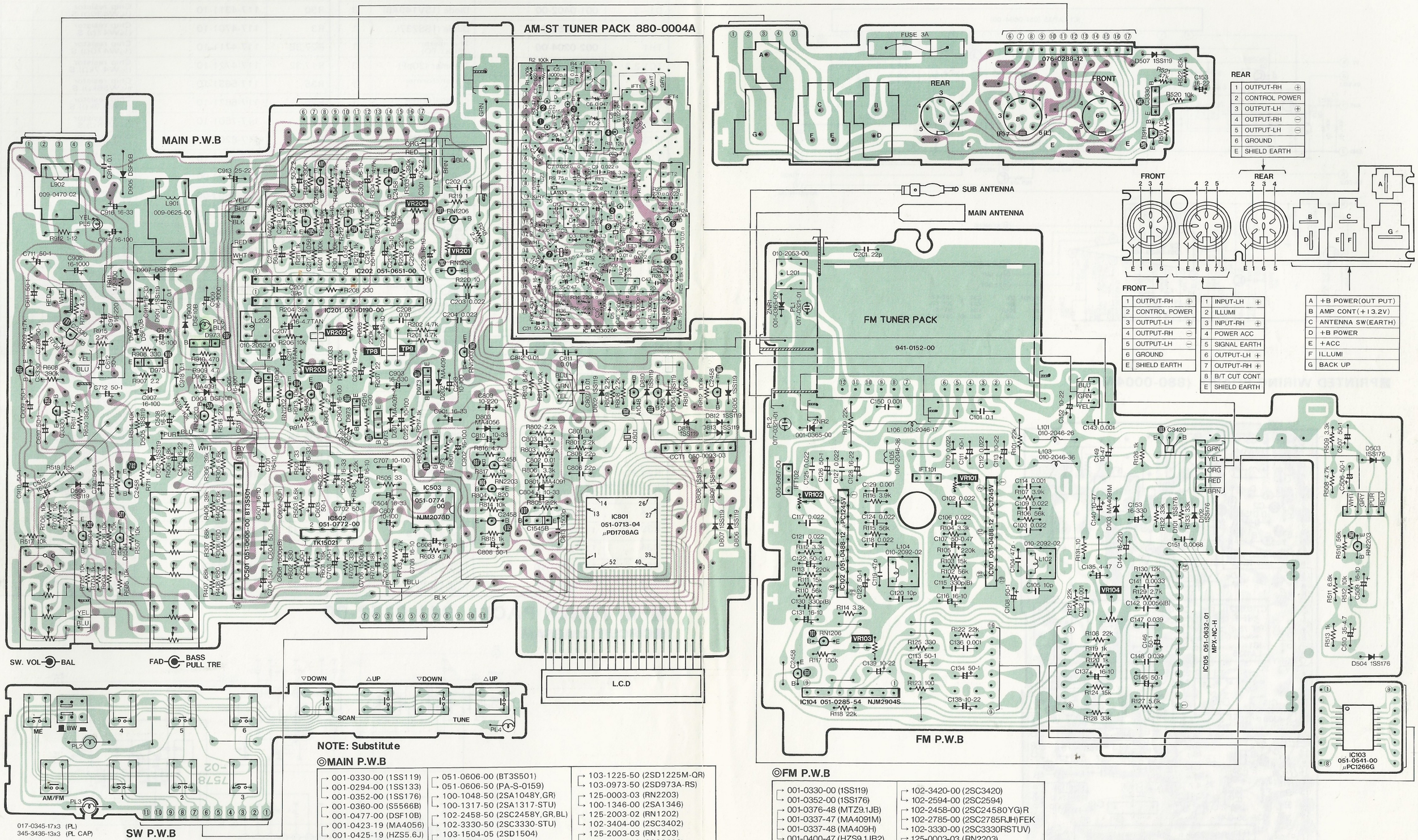

REAR	
1	OUTPUT-RH +
2	CONTROL POWER
3	OUTPUT-LH +
4	OUTPUT-RH −
5	OUTPUT-LH −
6	GROUND
E	SHIELD EARTH

FRONT	
1	OUTPUT-RH +
2	CONTROL POWER
3	OUTPUT-LH +
4	OUTPUT-RH −
5	OUTPUT-LH −
6	GROUND
E	SHIELD EARTH

FRONT	
1	INPUT-LH +
2	ILLUMI
3	INPUT-RH +
4	POWER ACC
5	SIGNAL EARTH
6	OUTPUT-LH +
7	OUTPUT-RH +
8	B/T CUT CONT
E	SHIELD EARTH

A	+B POWER(OUT PUT)
B	AMP CONT(+13.2V)
C	ANTENNA SW(EARTH)
D	+B POWER
E	+ACC
F	ILLUMI
G	BACK UP

017-0345-17x3 (PL)
345-3436-13x3 (PL CAP)

NOTE: Substitute

◎MAIN P.W.B

→ 001-0330-00 (1SS119)	→ 051-0606-00 (BT3S501)	→ 103-1225-50 (2SD1225M-QR)
→ 001-0294-00 (1SS133)	→ 051-0606-50 (PA-S-0159)	→ 103-0973-50 (2SD973A-RS)
→ 001-0352-00 (1SS176)	→ 100-1048-50 (2SA1048Y,GR)	→ 125-0003-03 (RN2203)
→ 001-0360-00 (S5566B)	→ 100-1317-50 (2SA1317-STU)	→ 100-1346-00 (2SA1346)
→ 001-0477-00 (DSF10B)	→ 102-2458-50 (2SC2458Y,GR,BL)	→ 125-2003-02 (RN1202)
→ 001-0423-19 (MA4056)	→ 102-3330-50 (2SC3330-STU)	→ 102-3404-00 (2SC3402)
→ 001-0425-19 (HZS5.6J)	→ 103-1504-05 (2SD1504)	→ 125-2003-03 (RN1203)
→ 001-0423-24 (MA9041)	→ 103-1450-20 (2SD1450)	→ 102-3400-00 (2SC3400)
→ 001-0425-24 (HZS9.1J)		

◎FM P.W.B

→ 001-0330-00 (1SS119)	→ 102-3420-00 (2SC3420)
→ 001-0352-00 (1SS176)	→ 102-2594-00 (2SC2594)
→ 001-0376-48 (MTZ9.1JB)	→ 102-2458-00 (2SC24580YG)R
→ 001-0337-47 (MA4091M)	→ 102-2785-00 (2SC2785RJH)FEK
→ 001-0337-48 (MA409H)	→ 102-3330-00 (2SC3330RSTUV)
→ 001-0400-47 (HZS9.1JB2)	→ 125-0003-03 (RN2203)
→ 051-0488-12 (μPC1245V-P)	→ 100-1346-00 (2SA1346AC)
→ 051-0488-13 (μPC1245-R)	

■AM-ST TUNER PACK: 880-0004A

■CIRCUIT DIAGRAM

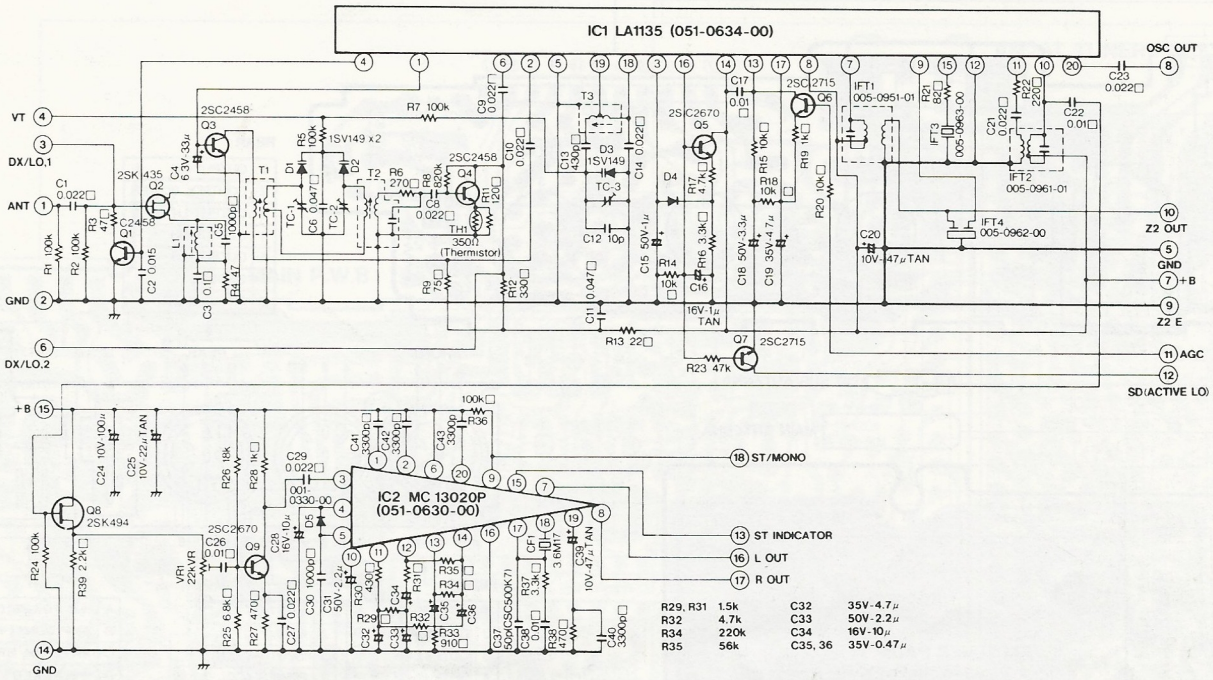

■PRINTED WIRING BOARD (880-0004A)

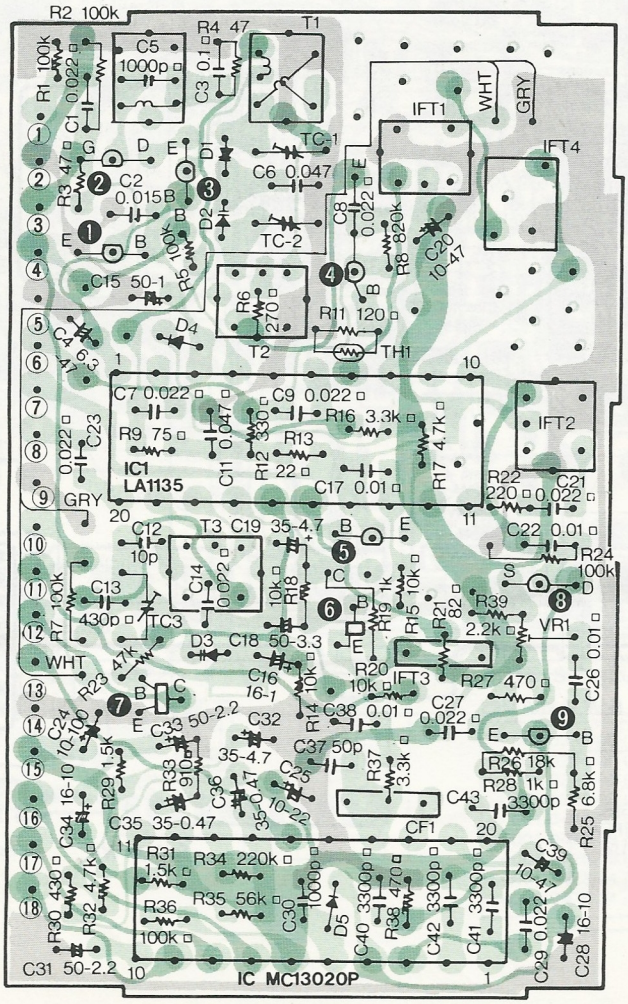

■ELECTRICAL SECTION PARTS LIST (880-0004A)

REF.NO.	PART NO. (ORDER NO.)	DESCRIPTION	Q'TY
D5	001-0330-00	Diode (1SS-119)	1
D1~3	001-0402-00	Diode (1SV149AB)	3
D4	001-0453-00	Diode (1SS237)	1
TH1	002-0204-00	Thermistor (350Ω TD)	1
TC1,2,3	004-1567-00	Trimmer (20pF)	3
IFT1	005-0951-01	IF-transformer (IFT-1)	1
IFT2	005-0961-01	IF-transformer (IFT-2)	1
IFT4	005-0962-00	IF-transformer (10A)	1
IFT3	005-0963-00	IF-transformer (BFU-450)	1
T2	005-0973-00	IF-transformer (T-2 2ND)	1
T1	010-2112-00	Coil (T-1 1ST)	1
L1	010-2113-00	Coil (L-1 5μH)	1
T3	010-2114-00	Coil (T-3 OSC)	1
VR1	012-3808-07	Variable resistor (22kΩ)	1
IC2	051-0630-00	IC (MC13020P)	1
IC1	051-0634-00	IC (LA1135)	1
CF1	060-0112-00	Ceramic resonator (CSA3-6M17)	1
Q1,3,4	102-2458-25	Transistor (2SC2458Y)	3
Q5,9	102-2670-15	Transistor (2SC2670O)	2
Q6,7	102-2715-15	Transistor (2SC2715-O)	2
Q2	108-0435-51	FET (2SK435-CD)	1
Q8	108-0494-02	FET (2SK494B)	1
R28	117-1021-10	Chip resistor (1/16W1kΩ) S	1
$R^{14,15,18}_{20}$	117-1031-10	Chip resistor (1/16W10kΩ) S	4
R36	117-1041-10	Chip resistor (1/16W100kΩ) S	1
R11	117-1211-10	Chip resistor (1/16W120Ω) S	1
R29,31	117-1521-10	Chip resistor (1/16W1.5kΩ) S	2
R13	117-2201-10	Chip resistor (1/16W22Ω) S	1
R22	117-2211-10	Chip resistor (1/16W220Ω) S	1
R39	117-2221-10	Chip resistor (1/16W2.2kΩ) S	1
R34	117-2241-10	Chip resistor (1/16W220kΩ) S	1
R6	117-2711-10	Chip resistor (1/16W270Ω) S	1
R12	117-3311-10	Chip resistor (1/16W330Ω) S	1

REF.NO.	PART NO. (ORDER NO.)	DESCRIPTION	Q'TY
R16,37	117-3321-10	Chip resistor (1/16W3.3kΩ) S	2
R30	117-4311-10	Chip resistor (1/16W430Ω) S	1
R3	117-4701-10	Chip resistor (1/16W47Ω) S	1
R27,38	117-4711-10	Chip resistor (1/16W470Ω) S	2
R17,32	117-4721-10	Chip resistor (1/16W4.7kΩ) S	2
R35	117-5631-10	Chip resistor (1/16W56kΩ) S	1
R25	117-6821-10	Chip resistor (1/16W6.8kΩ) S	1
R9	117-7501-10	Chip resistor (1/16W75Ω) S	1
R21	117-8201-10	Chip resistor (1/16W82Ω) S	1
R33	117-9111-10	Chip resistor (1/16W910Ω) S	1
C37	043-0204-00	Ceramic capacitor (50p)	1
C2	171-1533-06	Ceramic capacitor (0.015μF) SC	1
C43	173-3322-10	Ceramic capacitor (0.0033μF) S	1
C12	174-1000-13	Ceramic capacitor (10pF CH) TC	1
C13	176-4311-00	Ceramic chip capacitor (430pF CH) TC,S	1
C11	177-4732-05	Ceramic chip capacitor (0.047μF) HD	1
C5,30	178-1022-05	Ceramic chip capacitor (1000pF) HD,S	2
$C^{17,22,26}_{38}$	178-1032-05	Ceramic chip capacitor (0.01μF) HD,S	4
C3	178-1045-06	Ceramic chip capacitor (0.1μF) HD,S	1
$C^{1,8,9,10,14}_{21,23,27,29}$	178-2232-05	Ceramic chip capacitor (0.022μF) HD,S	9
C40,41,42	178-3322-05	Ceramic chip capacitor (0.0033μF) HD,S	3
C6	178-4735-06	Ceramic chip capacitor (0.047μF) HD,S	1
C25	042-0199-00	Electrolytic capacitor (10V22μF TAN)	1
C20,39	042-0200-00	Electrolytic capacitor (10V47μF TAN)	2
C35,36	042-0230-00	Electrolytic capacitor (35V0.47μF TAN)	2
C16	042-0239-00	Electrolytic capacitor (16V1μF TAN)	1
C15	182-1053-62	Electrolytic capacitor (50V1μF) SS	1
C28,34	182-1063-32	Electrolytic capacitor (16V10μF) SS	2
C24	182-1073-22	Electrolytic capacitor (10V100μF) SS	1
C31,33	182-2253-62	Electrolytic capacitor (50V2.2μF) SS	2
C18	182-3353-62	Electrolytic capacitor (50V3.3μF) SS	1
C4	182-3363-12	Electrolytic capacitor (6.3V33μF) SS	1
C19,32	182-4753-52	Electrolytic capacitor (35V4.7μF) SS	2

■FM TUNER PACK: 941-0152-00

■CIRCUIT DIAGRAM