MOC O/N 17723

**Clarion Co., Ltd.**
Export Division—22-3, Shibuya 2-chome, Shibuya-ku, Tokyo, 150 Japan
Tel: 03-400-1121 Fax: 03-400-8679 Telex: J22908, J22152
Service Dept.—50 Kamitoda, Toda-shi, Saitama, 335 Japan Tel: 0484-43-1111 Telex: J2962628 CLAFAC-J

Clarion

# Service Manual

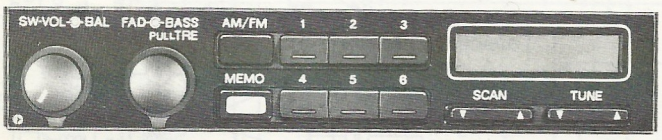


## MAZDA Automobile Genuine Electronic Tuning Radio

Model **RT-9068A**
**RT-9069A**

RT9034F

## ■SPECIFICATIONS:

Tuning system: Electronic tuning
Receive range: AM 531~1,602kHz (RT-9068A)
530~1,620kHz (RT-9069A)
(5kHz Step Tuner)
FM 87.9MHz to 107.9MHz
Intermediate frequency:
AM 450kHz
FM 10.7MHz
Quieting sensitivity: AM Less than 32dB (at 20dB S/N)
FM Less than 15dB (at 30dB S/N)
Selectivity: AM More than 45dB
(at ±9kHz detune RT-9068A)
(at ±10kHz detune RT-9069A)
Separation: FM More than 20dB
Auto tuning stop sensitivity:
AM DX 29dB to 41dB
FM DX 22dB to 38dB

Load impedance: 4Ω×4
Power output: 5W×4 (at 10% distortion)
Power supply voltage:
DC 13.2V, Negative ground
Current consumption:
Less than 5A
Dimensions: Width 180mm
Height 35mm
Depth 160mm
Weight: 1.0kg

## ■COMPONENT:

- **RT-9068A-A**
  **RT-9068A-B**
  Main unit 1
- **RT-9069A-A (Use only SOUTH AMERICA)**
  **RT-9069A-B**
  Main unit 1

# ■EXPLANATION OF IC's:

| | | |
|---|---|---|
| TA7270P | 051-0655-00 | |
| ■TA7270PCL | 051-0655-01 | 19W BTL/5.8W+5.8W |
| TA7271P | 051-0656-00 | AF Power Amp. |
| TA7271PCL | 051-0656-01 | |

TA7270P, TA7271P'S fixing holes are $\phi$3.2mm.
TA7270PCL, TA7271PCL'S fixing holes are $\phi$3.6mm.

**Figure**

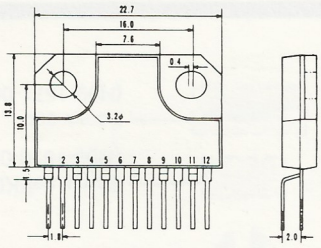

**Absolute Maximum Ratings**

| | | |
|---|---|---|
| Supply Voltage | $V_{CC}$ (opr) | 18V |
| Output Current | $I_O$ peak | 4.5A |
| Power Dissipation | $P_D$ | 25W |

**Electrical Characteristics**

($V_{CC}$=13.2V, $R_L$=4Ω, Rg=600Ω, f=1kHz, Ta=25°C)

| | Item | Symbol | Condition | Min. | Typ. | Max. | Unit |
|---|---|---|---|---|---|---|---|
| | No Signal Supply Current | $I_{CCQ}$ | $V_{IN}$=0 | — | 80 | 145 | mA |
| BTL | Output Power | $P_{OUT(1)}$ | THD=10% | 16 | 19 | — | W |
| | | $P_{OUT(2)}$ | THD=1% | 12 | 15 | — | W |
| | Tortal Harmonic Distortion | $THD_{(1)}$ | $P_{OUT}$=4W, $G_V$=40dB | — | 0.03 | 0.25 | % |
| | Output Offset Voltage | $V_{OFF}$ | $V_{IN}$=0 | — | 0 | 0.35 | V |
| | Voltage Gain | $G_{V(1)}$ | $V_{OUT}$=0dBm | — | 40 | — | dB |
| | Noise Output Voltage | $V_{NO(1)}$ | Rg=0 DIN45405 noise filter | — | 0.14 | — | $mV_{rms}$ |
| | Ripple Reduction Ratio | $R \cdot R_{(1)}$ | $f_{ripple}$=100Hz $V_{ripple}$=0dBm | — | −52 | −40 | dB |
| DUAL | Output Power | $P_{OUT(3)}$ | THD=10% | 5 | 5.8 | — | W |
| | Tortal Harmonic Distortion | $THD_{(2)}$ | $P_{OUT}$=1W | — | 0.06 | 0.30 | % |
| | Voltage Gain | $G_{V(2)}$ | $V_{OUT}$=0dBm | 50 | 52 | 54 | dB |
| | Noise Output Voltage | $V_{NO(2)}$ | Rg=10kΩ BW=20Hz~20kHz | — | 0.7 | 1.5 | $mV_{rms}$ |
| | Ripple Reduction Ratio | $R \cdot R_{(2)}$ | $f_{ripple}$=100Hz $V_{ripple}$=0dBm | — | −52 | −40 | dB |
| | Cross Talk | C·T | $V_{OUT}$=0dBm | — | −57 | — | dB |
| | Input Impedance | $R_{IN}$ | f=1kHz | — | 33 | — | kΩ |

**Block Diagram**

(1) BTL

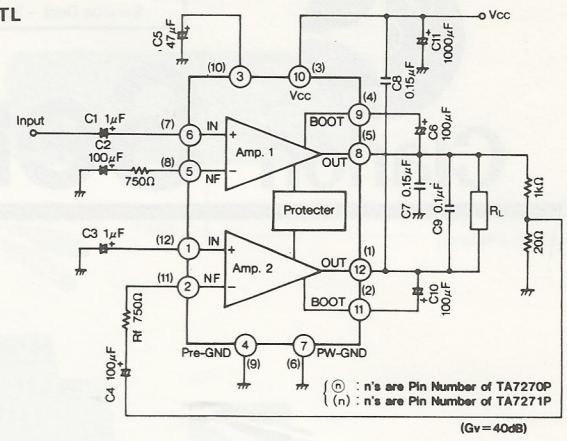


(2) DUAL

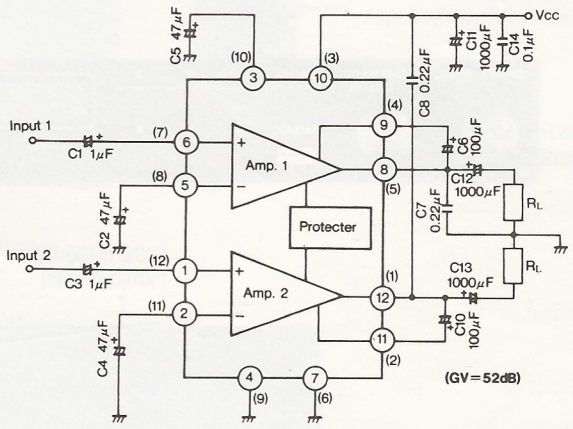


NOTE: Refer to the description in Service manual EXPLANATION OF IC's VOL. 2

| | | |
|---|---|---|
| ■MPX-NC-V | 051-0633-00 | MPX with Noise Canceller (Page 10) |
| ■TONE CONTROL | 051-0743-00 | BASS-TRE-MIX (Page 25) |
| ■NPD-1708G-021-00<br>NPD-1708AG-021-00 | 051-0713-02<br>051-0713-03 | PLL Frequency Synthesisizer & Controller (Page 60) |

# ■PARTS LIST:

NOTE: OM (Oxidized Metal) S (Small) HD (Higher Dielectric) SS (Semi-Conductric) SS (Super Small) TC (Temperature-Compensating) LL (Low Leak) USS (Ultra Super Small)

## ◎Electrical section

| REF.NO. | PART NO. (ORDER NO.) | DESCRIPTION | Q'TY |
|---|---|---|---|
| $D_{101,102,103,104,201,502-508,511,512,513,514,515,516,607,608}$ | 001-0330-00 | Diode (1SS119) | 20 |
| $D_{510,602,604,605}$ | 001-0360-00 | Diode (S5566B) | 4 |
| $D_{501,606,610,611}$ | 001-0377-47 | Diode (MA4091) | 4 |
| $D_{609}$ | 001-0377-49 | Diode (MA4100L) | 1 |
| $D_{509}$ | 001-0423-19 | Diode (MA4056) | 1 |
| $D_{601}$ | 001-0429-00 | Diode (S3V10) | 1 |
| $CHOKE_{602,701}$ | 009-0470-02 | Choke | 2 |
| $CHOKE_{601}$ | 009-0633-00 | Choke | 1 |
| $L_{101}$ | 010-1960-32 | Coil | 1 |
| $L_{201}$ | 010-2053-00 | Coil | 1 |
| $RY_{601}$ | 014-0509-00 | Relay | 1 |
| $SUP_{101}$ | 060-0122-00 | Surge protector | 1 |
| $CCT_{501}$ | 050-0093-03 | Component circuit (33kΩx6) | 1 |
| $IC_1$ | 051-0633-00 | IC (NC/MPX) | 1 |
| $IC_4$ | 051-0655-01 | IC (TA7270P) | 1 |

| REF.NO. | PART NO. (ORDER NO.) | DESCRIPTION | Q'TY |
|---|---|---|---|
| $IC_3$ | 051-0656-01 | IC (TA7271P) | 1 |
| $IC_5$ | 051-0713-03 | IC ($\mu$PD1708G) | 1 |
| $IC_2$ | 051-0743-00 | IC (Bass/Treble) | 1 |
| $X_{501}$ | 061-1037-00 | Crystal (4.5MHz) | 1 |
| $Q_{102,503}$ | 100-1048-50 | Transistor (2SA1048) | 2 |
| $Q_{604,605}$ | 102-1846-00 | Transistor (2SC1846) | 2 |
| $Q_{101,103,104,105,504,505,506,508,606}$ | 102-2458-25 | Transistor (2SC2458Y) | 9 |
| $Q_{501,502}$ | 102-2458-51 | Transistor (2SC2458GR, BL) | 2 |
| $Q_{602,603}$ | 102-3402-00 | Transistor (2SC3402AC) | 2 |
| $Q_{601}$ | 103-1225-18 | Transistor (2SD1225M) | 1 |
| $Q_{301,401}$ | 103-1450-50 | Transistor (2SD1450ST) | 2 |
| $Q_{507}$ | 125-0003-02 | Transistor (RN2202) | 1 |
| $R_{701}$ | 111-1201-81 | Film resistor (½W12Ω) | 1 |
| $R_{603}$ | 111-4711-82 | Film resistor (½W470Ω) | 1 |
| $C_{308,407}$ | 160-5612-05 | Ceramic capacitor (560pF B) HD | 2 |
| $C_{107}$ | 160-6822-05 | Ceramic capacitor (6800pF B) HD | 1 |
| $C_{204,207,502,507}$ | 171-1033-06 | Ceramic capacitor (0.01$\mu$F SR) SC | 4 |

| REF.NO. | PART NO. (ORDER NO.) | DESCRIPTION | Q'TY |
|---|---|---|---|
| $C_{512,513}$ | 171-2233-06 | Ceramic capacitor (0.022μF SR) SC | 2 |
| $C_{104}$ | 171-3323-06 | Ceramic capacitor (3300pF SR) SC | 1 |
| $C_{111,112}$ | 171-3333-06 | Ceramic capacitor (0.033μF SR) SC | 2 |
| $C_{205}$ | 171-4733-06 | Ceramic capacitor (0.047μF SR) SC | 1 |
| $C_{503,509}$ | 173-1032-10 | Polyester capacitor (0.01μF) S | 2 |
| $C^{317,415,418,601}_{602,604}$ | 173-1042-10 | Polyester capacitor (0.1μF) S | 6 |
| $C^{206,316,318,414}_{416}$ | 173-1542-10 | Polyester capacitor (0.15μF) S | 5 |
| $C_{103}$ | 173-6811-10 | Polyester capacitor (680pF) S | 1 |
| $C_{101}$ | 174-1800-13 | Ceramic capacitor (18pF CH) TC | 1 |
| $C_{201,505,506}$ | 174-2200-13 | Ceramic capacitor (22pF CH) TC | 3 |
| $C_{307,406}$ | 042-0334-00 | Electrolytic capacitor (63V0.1μF) | 2 |
| $C_{309,408}$ | 042-0334-08 | Electrolytic capacitor (63V2.2μF) | 2 |
| $C_{608}$ | 042-0334-22 | Electrolytic capacitor (16V10μF) | 1 |
| $C_{312,417}$ | 042-0338-00 | Electrolytic capacitor (16V2200μF) | 2 |
| $C^{310,311,313,314}_{315,409,410,411}$ $_{412,413}$ | 042-0342-00 | Electrolytic capacitor (10V100μF) | 10 |
| $C_{109,304,403,508}$ | 179-1053-62 | Electrolytic capacitor (50V1μF) S | 4 |
| $C^{117,118,301,401}_{609}$ | 179-1063-32 | Electrolytic capacitor (16V10μF) S | 5 |

| REF.NO. | PART NO. (ORDER NO.) | DESCRIPTION | Q'TY |
|---|---|---|---|
| $C_{510}$ | 179-1073-22 | Electrolytic capacitor (10V100μF) S | 1 |
| $C_{119,603}$ | 179-1073-32 | Electrolytic capacitor (16V100μF) S | 2 |
| $C^{113,114,115,116}_{302,402}$ | 179-2253-62 | Electrolytic capacitor (50V2.2μF) S | 6 |
| $C_{105}$ | 179-2273-22 | Electrolytic capacitor (10V220μF) S | 1 |
| $C_{501}$ | 179-3363-22 | Electrolytic capacitor (10V33μF) S | 1 |
| $C_{511}$ | 179-3363-32 | Electrolytic capacitor (16V33μF) S | 1 |
| $C_{303}$ | 179-3373-33 | Electrolytic capacitor (16V330μF) S | 1 |
| $C_{102,202}$ | 179-4763-22 | Electrolytic capacitor (10V47μF) S | 2 |
| $C_{701}$ | 179-4763-32 | Electrolytic capacitor (16V47μF) S | 1 |
| $C_{605}$ | 179-4773-33 | Electrolytic capacitor (16V470μF) S | 1 |
| $C_{110}$ | 182-1056-62 | Electrolytic capacitor (50V1μF NP) SS | 1 |
| $C_{106}$ | 182-1066-22 | Electrolytic capacitor (10V10μF NP) SS | 1 |
| $C_{606,607}$ | 182-1073-22 | Electrolytic capacitor (10V100μF) SS | 2 |
| $C_{306,405}$ | 182-2243-62 | Electrolytic capacitor (50V0.22μF) SS | 2 |
| $C_{108}$ | 182-2246-62 | Electrolytic capacitor (50V0.22μF NP) SS | 1 |
| $C_{504}$ | 182-2256-52 | Electrolytic capacitor (35V2.2μF NP) SS | 1 |
| $C_{305,404}$ | 182-3343-62 | Electrolytic capacitor (50V0.33μF) SS | 2 |

## ● How to read resistor

Resistors are deleted from the table of electric components, (except metal film resistors and special resistors). They can be converted to product Nos. as follows.

**Film resistor (Carbon film resistor)**

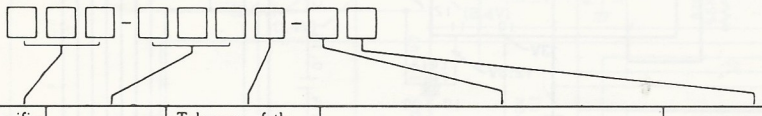

| Classification | Resistance * | Tolerance of the value of resistance | | Rated power | | | Shape | |
|---|---|---|---|---|---|---|---|---|
| 1 1 1 | | 0 | | 0 | | | 0 | |
| | Example | 1 | ± 5 % | 1 | 1/8W | Approx. 3.7mm | 1 | Horizontal |
| | 33Ω=330 | 2 | | 2 | 1/4Ws | Approx. 6.5mm | 2 | Vertical |
| | 33kΩ=333 | 3 | | 3 | | | 3 | |
| | | 4 | | 4 | 1/2W | Approx. 9mm | 4 | |
| | | | | 7 | 1/6W | Approx. 3.5mm | | |
| | | | | 8 | 1/2Ws | Approx. 6.6mm | | |
| | | | | 9 | 1/4Wss | Approx. 3.2mm | | |

**(Example)**

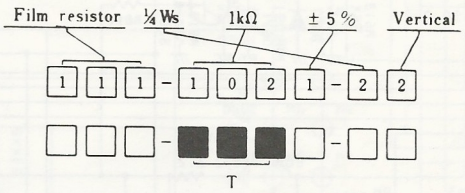


Note 1. The first two of three digits representing resistance are effective digits and the last one represents number of "0" following this.
Unit is given in ohm (Ω).

**Example of conversion of resistance** ■■■□ (T)

Note) R : Resistance, T : Converted value

| R | T | R | T | R | T | R | T | R | T | R | T | R | T | R | T | R | T | R | T |
|---|---|---|---|---|---|---|---|---|---|---|---|---|---|---|---|---|---|---|---|
| Ω 0.1 | 108 | Ω 1.0 | 109 | Ω 10 | 100 | Ω 100 | 101 | kΩ 1.0 | 102 | kΩ 10 | 103 | kΩ 100 | 104 | MΩ 1.0 | 105 | MΩ 10 | 106 | MΩ 100 | 107 |
| 0.15 | 158 | 1.5 | 159 | 15 | 150 | 150 | 151 | 1.5 | 152 | 15 | 153 | 150 | 154 | 1.5 | 155 | 15 | 156 | 150 | 157 |

| COLOR | BLK | BRN | RED | ORG | YEL | GRN | BLU | PUR | GRY | WHT | GOLD | SILVER | NO COLOR |
|---|---|---|---|---|---|---|---|---|---|---|---|---|---|
| 1st color band | 0 | 1 | 2 | 3 | 4 | 5 | 6 | 7 | 8 | 9 | | | |
| 2nd color band | 0 | 1 | 2 | 3 | 4 | 5 | 6 | 7 | 8 | 9 | | | |
| 3rd color band | $10^0$ | $10^1$ | $10^2$ | $10^3$ | $10^4$ | $10^5$ | $10^6$ | | | | $10^{-1}$ | $10^{-2}$ | |
| 4th color band | | | | | | | | | | | ± 5 % (J) | ± 10% (K) | ± 20% (M) |

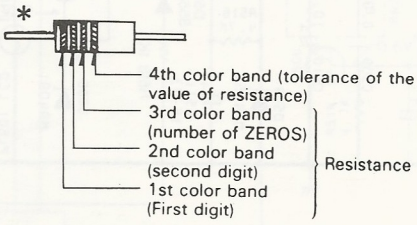

## ■AM TUNER PACK: 941-0141-02 RT-9069A

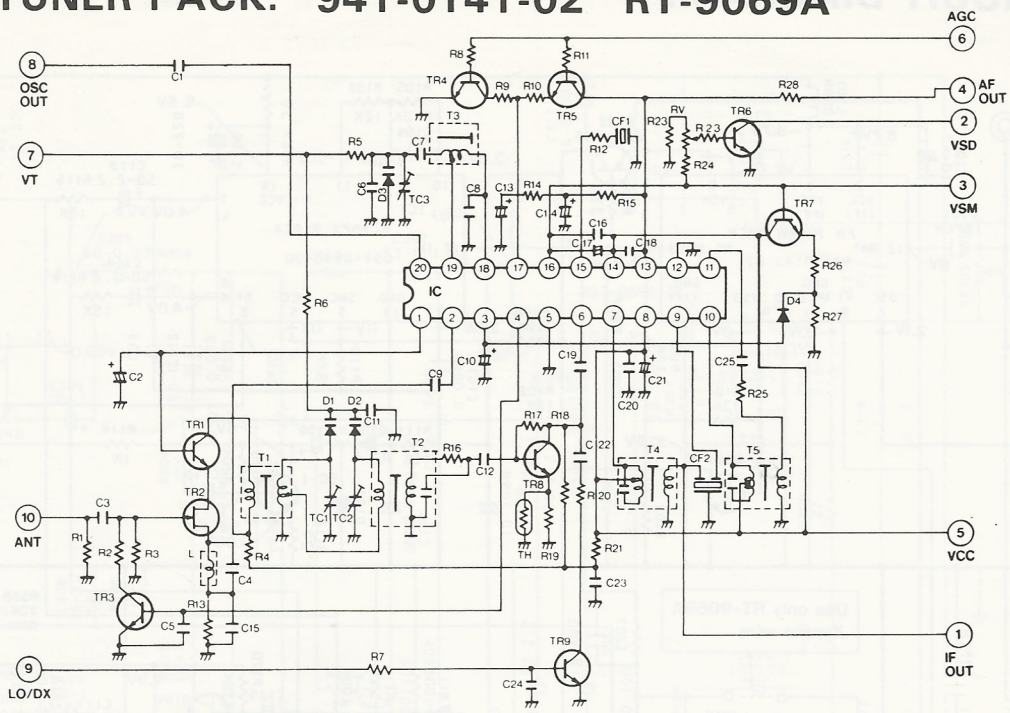


## ■AM TUNER PACK: 941-0141-03 RT-9068A

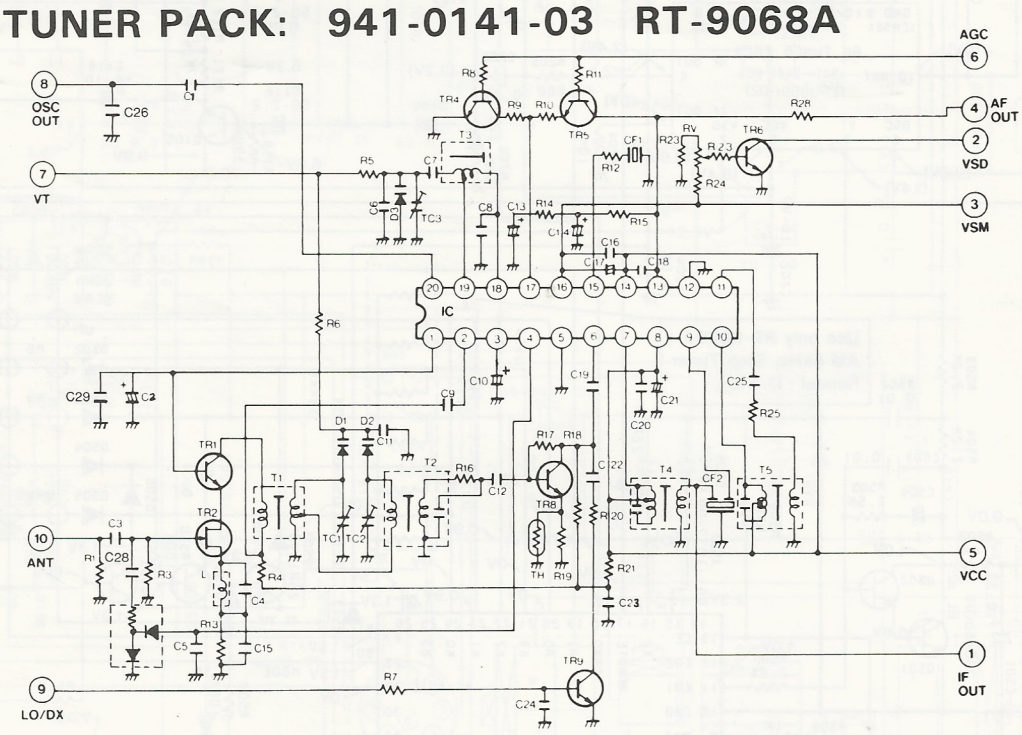


## ■FM TUNER PACK: 941-0143-01

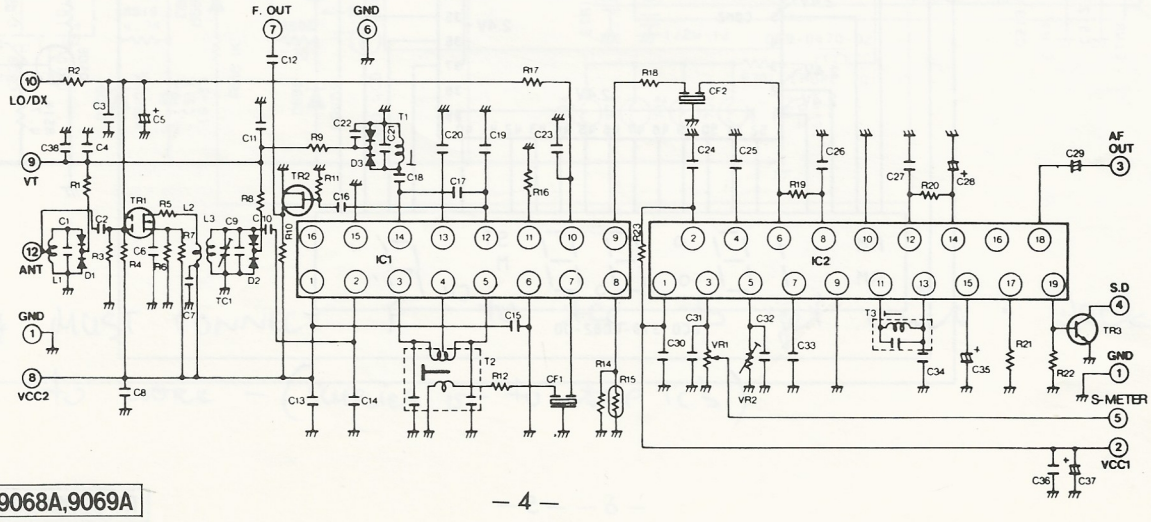

## ■CIRCUIT DIAGRAM:

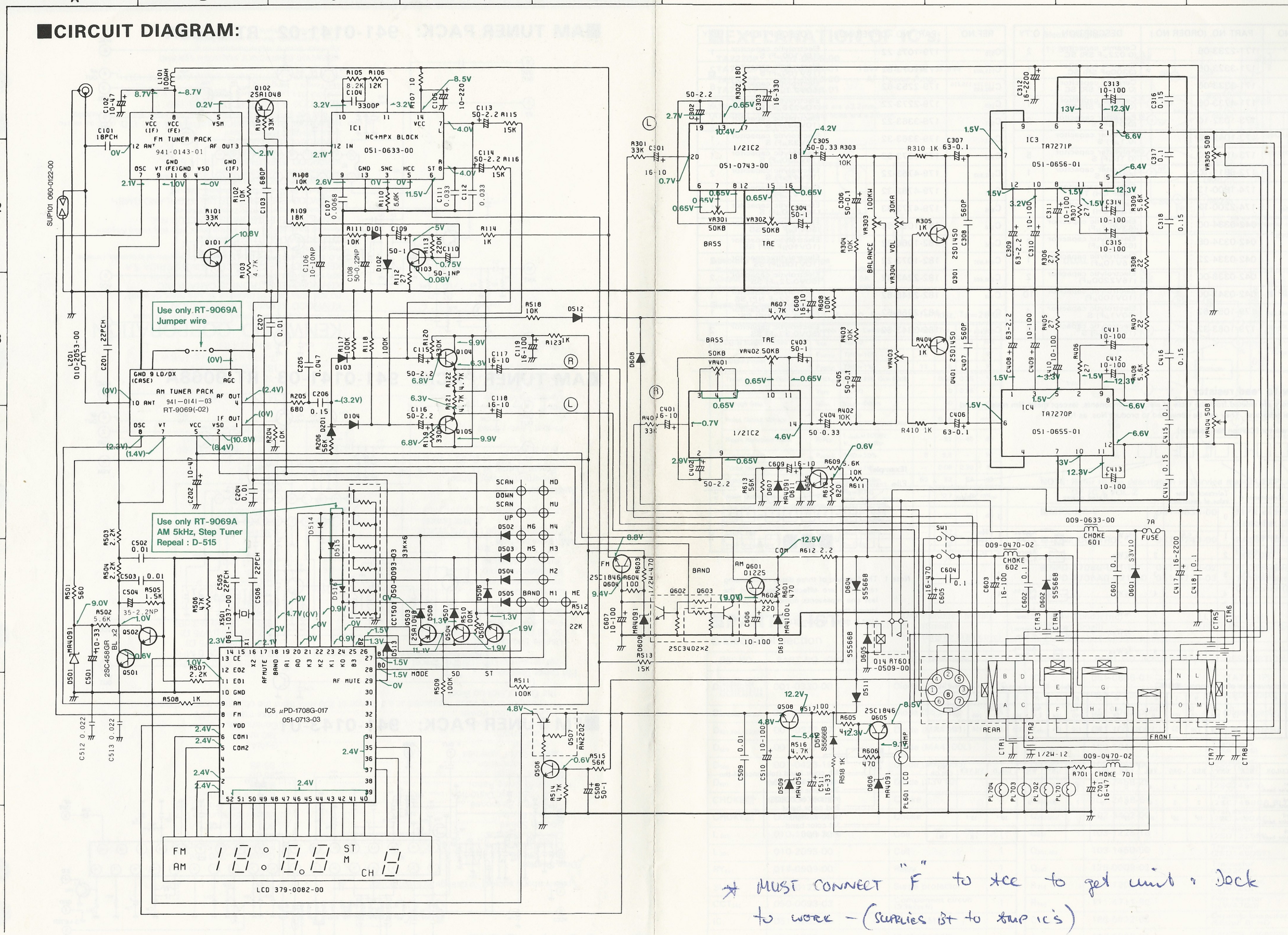


* MUST CONNECT "F" to ACC to get unit & Deck to work – (SUPPLIES B+ to AMP IC's)

## ■PRINTED WIRING BOARD:

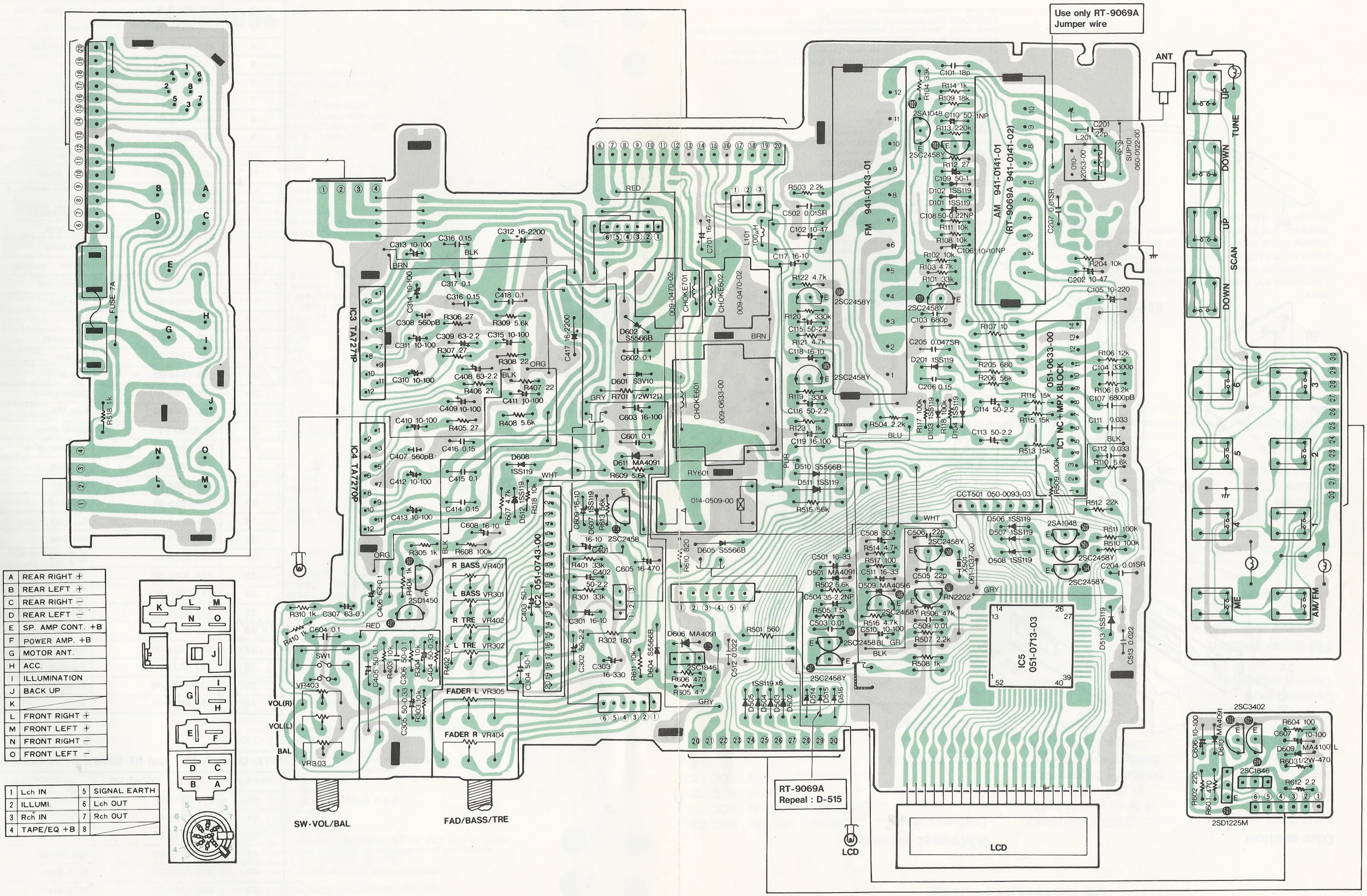


| | |
|---|---|
| A | REAR RIGHT + |
| B | REAR LEFT + |
| C | REAR RIGHT − |
| D | REAR LEFT − |
| E | SP. AMP CONT. +B |
| F | POWER AMP. +B |
| G | MOTOR ANT. |
| H | ACC. |
| I | ILLUMINATION |
| J | BACK UP |
| K | |
| L | FRONT RIGHT + |
| M | FRONT LEFT + |
| N | FRONT RIGHT − |
| O | FRONT LEFT − |

| | | | |
|---|---|---|---|
| 1 | Lch IN | 5 | SIGNAL EARTH |
| 2 | ILLUMI. | 6 | Lch OUT |
| 3 | Rch IN | 7 | Rch OUT |
| 4 | TAPE/EQ +B | 8 | |

## ■EXPLODED VIEW • PARTS LIST:

◎Main section

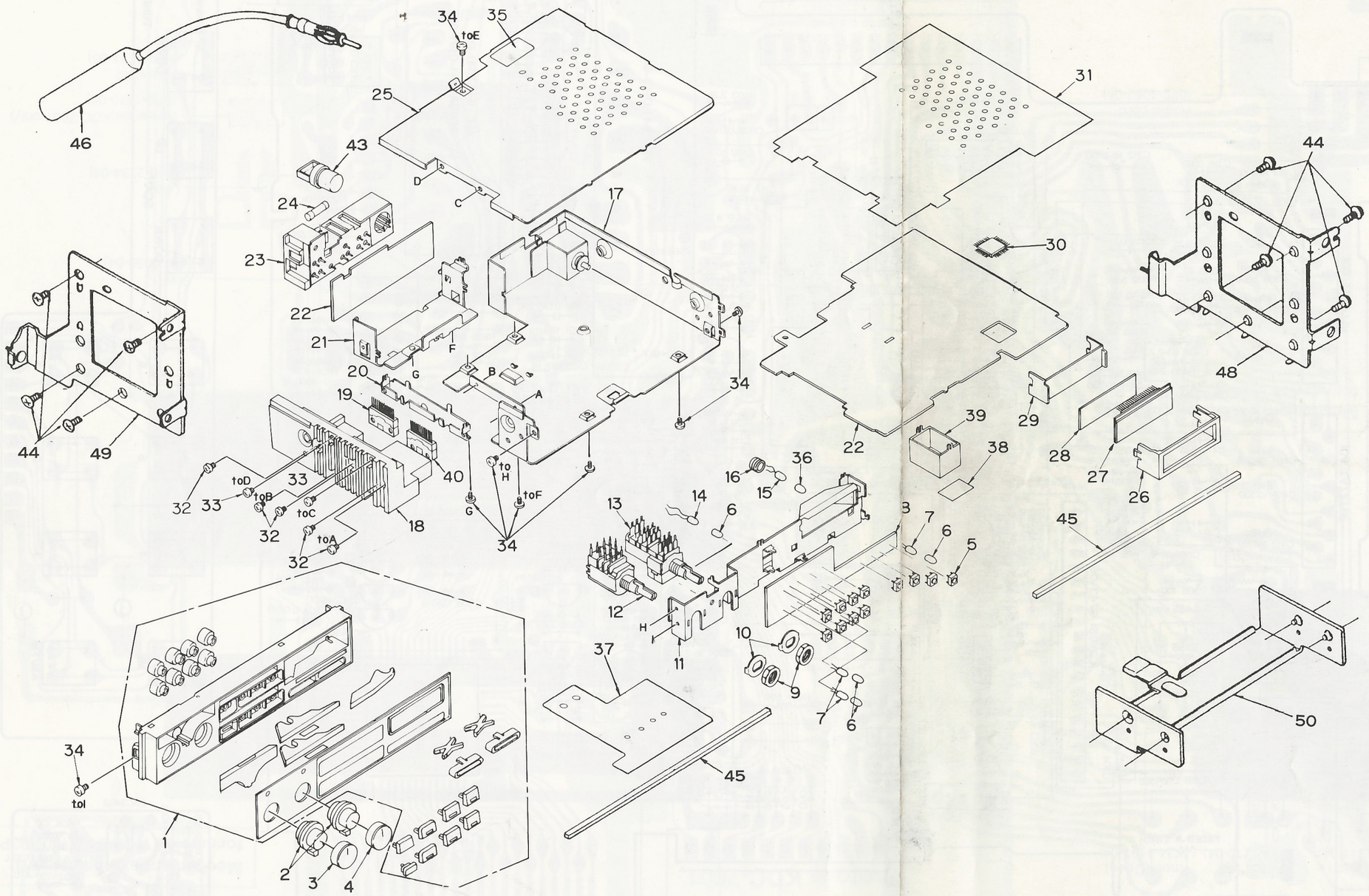


| REF.NO. | PART NO. (ORDER NO.) | DESCRIPTION |
|---|---|---|
| 1 | 940-0780A | Escutcheon ass'y |
| 2 | 380-4646-01 | Knob (BAL, FAD) |
| 3 | 380-4635-05 | Knob (VOL) |
| 4 | 380-4634-01 | Knob (BASS) |
| 5 | 013-3694-00 | Switch |
| 6 | 345-3436-13 | P.L cap |
| 7 | 017-0345-17 | Pilot lamp |
| 8 | 099-7540-02 | P.W.B |
| 9 | 722-0231-00 | Nut |
| 10 | 745-0668-00 | Washer |
| 11 | 308-1041-01 | Front cover |
| 12 | 012-4319-00 | Variable resistor (VOL) |
| 13 | 012-4408-00 | Variable resistor (BASS/TREB) |
| 14 | 017-0345-35 | Pilot lamp |
| 15 | 017-0339-14 | Pilot lamp |
| 16 | 345-4040-02 | Holder |
| 17 | 311-1219-01 | Lower case |
| 18 | 313-1255-00 | Heat sink |
| 19 | 051-0656-01 | IC |
| 20 | 330-8353-00 | IC bracket |
| 21 | 330-8351-00 | Bracket |
| 22 | 099-7844-00 | P.W.B |
| 23 | 074-0782-01 | Outlet socket |
| 24 | 120-0070-02 | Fuse (7A) |
| 25 | 303-0329-01 | Upper cover |
| 26 | 335-1963-01 | Indicator cover |
| 27 | 379-0082-00 | Indicator |
| 28 | 335-1964-02 | Reflector |
| 29 | 335-1965-01 | Back plate |
| 30 | 051-0713-03 | IC |
| 31 | 347-1926-04 | Insulator |
| 32 | 714-3020-80 | Machine screw (M3x20) |
| 33 | 714-3014-80 | Machine screw (M3x14) |
| 34 | 714-3004-80 | Machine screw (M3x4) |
| 35 | 286-5872-00 (RT-9068A)<br>286-5873-00 (RT-9069A) | Set plate |
| 36 | 345-3842-02 | P.L cap |
| 37 | 347-1927-00 | Insulator |
| 38 | 347-1077-00 | Insulator |
| 39 | 330-8352-00 | Shield case |
| 40 | 051-0655-01 | IC |

**NOTE: Use only (B-Type) RT-9068A-B, RT-9069A-B**

| REF.NO. | PART NO. (ORDER NO.) | DESCRIPTION |
|---|---|---|
| 43 | 076-0267-01 | Short plug |
| 44 | 714-5008-41 | Machine screw (M5x8) |
| 45 | 345-3639-00 | Rubber part |
| 46 | 093-0970-00 | Ant. jumper |
| 48 | 300-7296-01 | MTG-Brkt |
| 49 | 300-7297-01 | MTG-Brkt |
| 50 | 300-7298-00 | MTG-Brkt |



Printed in Japan 298-3614-00 FEB. 19