TOSHIBA

STEREO RADIO CASSETTE RECORDER

RT-8057

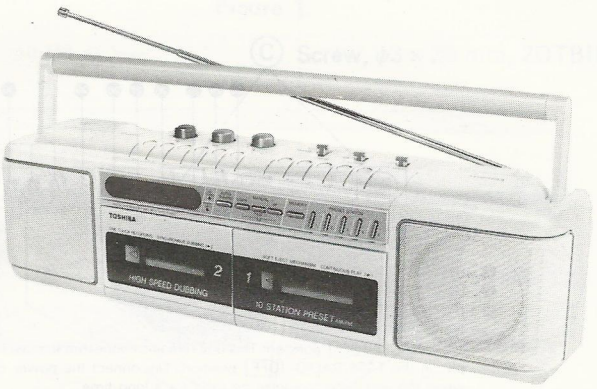

SPECIFICATIONS

Cassette tape used:	Normal: C-30 ~ C-90
Tape speed:	4.8 cm/sec.
Track system:	Four-track two-channel stereophonic
Recording system:	AC bias
Erasing system:	Multipolar magnet erasing
Frequency response:	70 Hz to 14 kHz
Receiving frequency:	FM: 87.5 MHz to 107.9 MHz (0.2 MHz steps) AM: 530 kHz to 1610 kHz (10 kHz steps) (USA, Canada) 531 ~ 1602 kHz (9 kHz steps) (Australia)
Intermediate frequency:	FM: 10.7 MHz AM: 450 kHz
Antenna:	FM: telescopic antenna AM: ferrite-core antenna
Speakers:	100 mm (dia.) dynamic x 2
Jacks:	[MIC] jack x 1, Impedance 200 ohm to 2K ohm [PHONES] jack x 1
Power supply:	AC 120V, 60 Hz DC 9V IEC R14 ("C" cell) x 6
For memory back-up:	DC 3V IEC R6 ("AA" cell) x 2
Power consumption:	14W (USA, Canada) 16W (Australia)
Dimensions (W x H x D):	505 x 136 x 122 mm
Weight:	2.58 kg (without batteries)

Specifications are subject to change without notice.

K/W-TA, AY
K-TC P/L-TA

PRINTED IN JAPAN 22905697 Jun., 1987 (B)

1. OPERATING CONTROLS

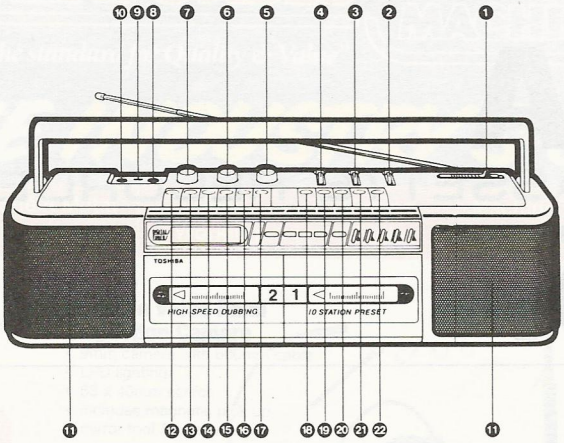

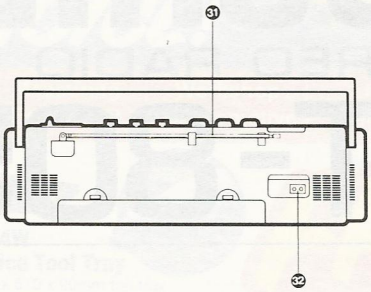

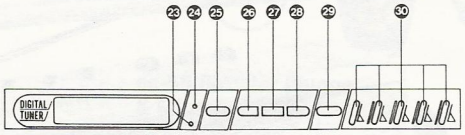

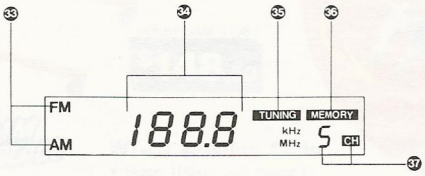

1. [BAND] Selector
2. [FM MODE] Selector
3. [FUNCTION] Selector
   Note:
   TAPE/RADIO [OFF] position: This unit remains connected to main supply, in the TAPE/RADIO [OFF] position. Disconnect the power cord when the unit is not going to be used for a long time.
4. [DUBBING SPEED/BEAT] Selector
5. [TONE] Control
6. [BALANCE] Control
7. [VOLUME] Control
8. [MIC] Jack
9. Built-in Microphone
10. [PHONES] Jack
11. Speakers
12. [PAUSE] Button
13. [STOP/EJECT] Button
14. [FF] Button
15. [REW] Button
16. [PLAY] Button
17. [REC] Button
18. [PAUSE] Button
19. [STOP/EJECT] Button
20. [FF] Button
21. [REW] Button
22. [PLAY] Button
23. [POWER/BATT] Indicator
24. [FM STEREO] Indicator
25. [AUTO TUNING] Button
26. [MANUAL DOWN] Button
27. [AM FAST] Button
28. [MANUAL UP] Button
29. [MEMORY] Button
30. [PRESET STATION] Buttons
31. Telescopic Antenna
32. [AC POWER] Socket
33. Band Indicator
34. Frequency display
35. [TUNING] Indicator
36. [MEMORY] Indicator
37. [CH] Indicator

TOSHIBA STEREO RADIO CASSETTE RECORDER
MODEL NO. RT-8057

LISTED 589G

POWER SOURCE
AC 120V 60Hz 14W
DC 9V IEC R14 ("C" CELL)×6
FOR MEMORY: BACK-UP 3V IEC R6 ("AA" CELL)×2

FREQ RANGE
FM 87.5~107.9MHz
AM 530~1610kHz

TOSHIBA CORPORATION
TOKYO JAPAN MADE IN TAIWAN

U.S.A., Canada

TOSHIBA STEREO RADIO CASSETTE RECORDER
MODEL NO. RT-8057

POWER SOURCE
AC 240V ~ 50Hz 16W
DC 9V ⎓ IEC R14 ("C" CELL)×6
FOR MEMORY: BACK-UP 3V ⎓ IEC R6 ("AA" CELL)×2

FREQ RANGE
FM 87.5~107.9MHz
AM 531~1602KHz

TOSHIBA CORPORATION
25809848 TOKYO JAPAN MADE IN TAIWAN

Australia

Power Cord

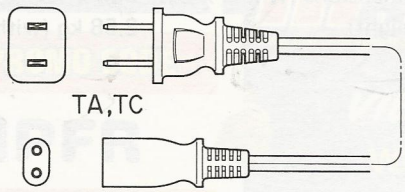

U.S.A. and Canada

Power Cord

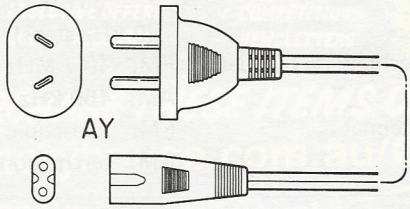

Australia

2. DISASSEMBLY INSTRUCTIONS

FRONT CABINET REMOVAL

1. Remove the battery cover.
2. Remove five screws Ⓐ and one screw Ⓑ.
3. Open the cassette cover by pressing the STOP/EJECT buttons left and right.
4. Cabinet will be removed. (Figure 1)

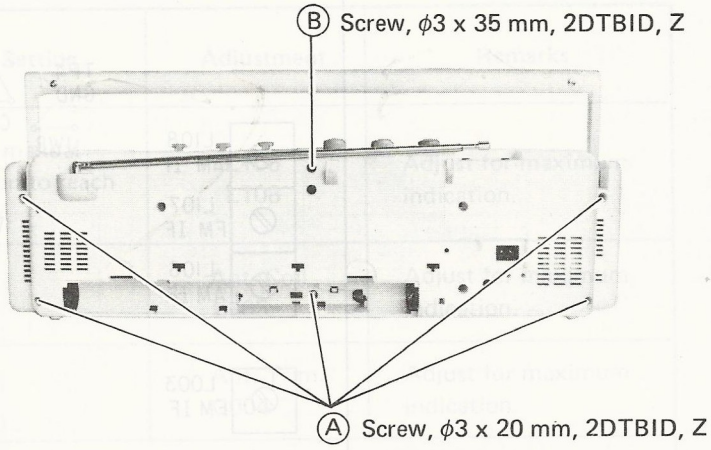

Figure 1.

CONTROL P.C. BOARD REMOVAL

1. Remove two screws Ⓒ and seven screws Ⓓ.
2. Remove two speakers and disconnect a wire by lift up the lever of connector.
3. The control P.C. board will be removed. (Fugures 2 & 3)

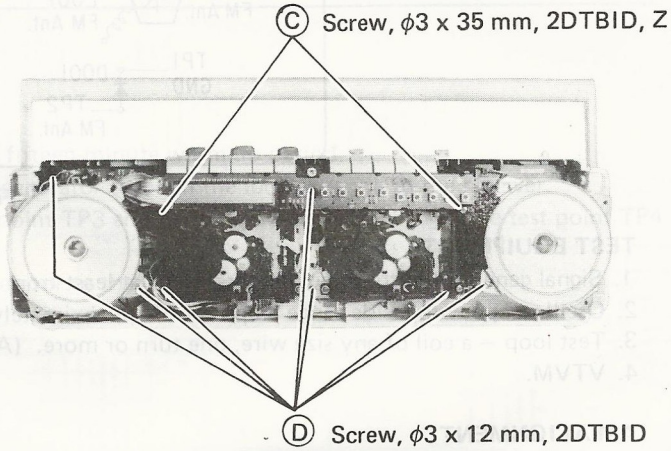

Figure 2.

MECHANISM ASS'Y REMOVAL

1. Remove the mechanism ass'y after control P.C. board removed.

MAIN P.C. BOARD REMOVAL

1. Remove six knobs (Vol, Balance, Tone, Dubbing, Function and FM mode)
2. Remove five screws Ⓖ, and the main P.C. board will be removed.

TUNER P.C. BOARD REMOVAL

1. Remove two screws Ⓗ and one screw Ⓙ.
2. Remove the tuner P.C. board by pulling off the switch knob.

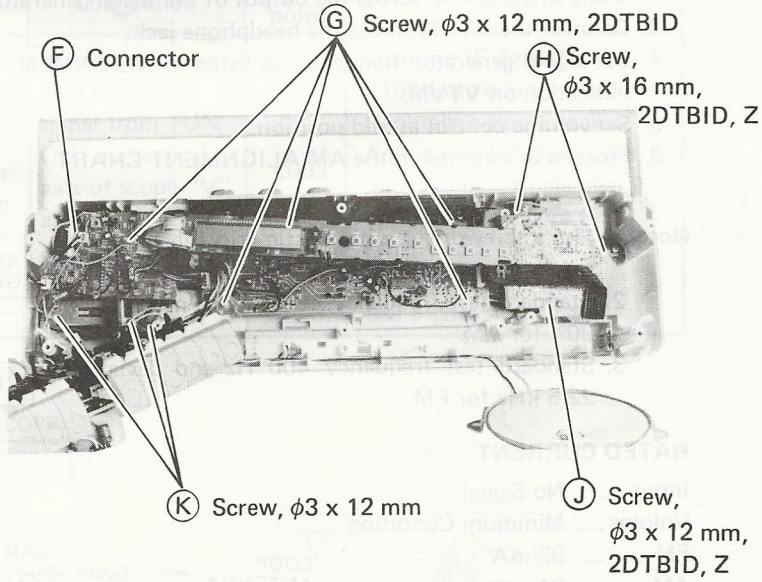

Figure 3.

3. ALIGNMENT INSTRUCTIONS

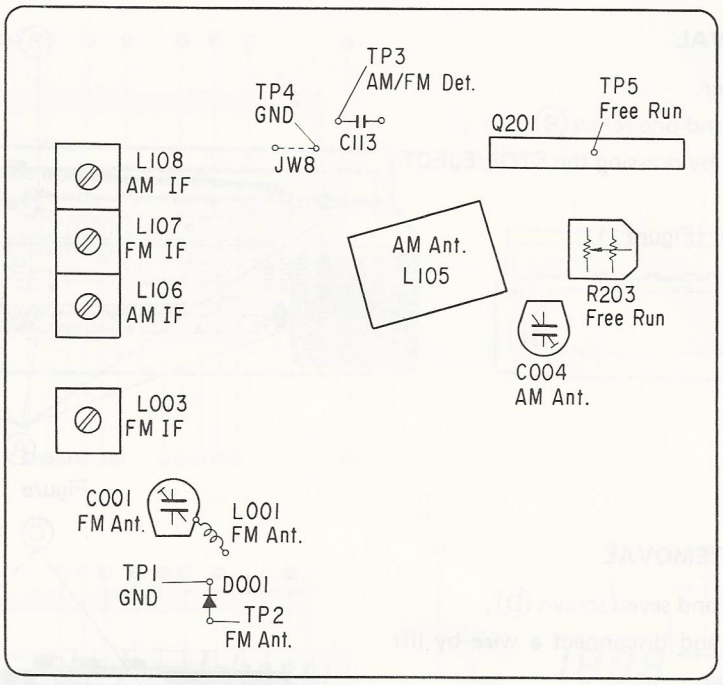

Figure 4

TEST EQUIPMENT

1. Signal generator with a frequency range of at least from 450 kHz to 23 MHz AM.
2. Oscilloscope with a side range amplifier of approximately 100 kHz.
3. Test loop – a coil of any size wire, one turn or more. (AM)
4. VTVM.

AM ALIGNMENT

1. Turn on the AM signal generator and the VTVM allowing a fifteen-minute warm-up period.
2. Using the test loop across the output of the signal generator, inductively connect the signal generator to the radio.
3. Connect the VTVM across the headphone jack.
4. Set signal generator frequency as listed in ALIGNMENT CHART and maintain a sufficient output level to provide an indication on VTVM.
5. Set volume control at mid-position.
6. Proceed as outlined in the AM ALIGNMENT CHART.

Note: 1. Use a screwdriver with plastic grip for all adjustments.
2. Standard test frequency 400 Hz and modulation 30% for AM.
3. Standard test frequency 400 Hz and deviation 22.5 kHz for FM.

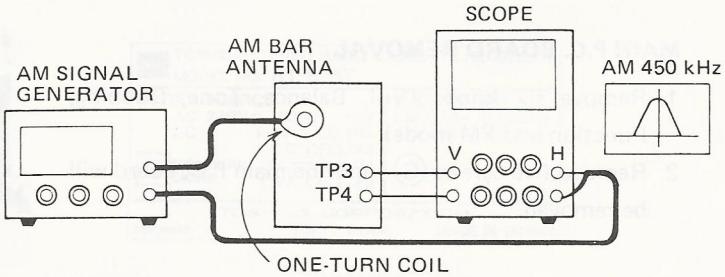

Figure 5

RATED CURRENT

Input ..... No Signal
Volume .... Minimum Condition
FM ..... 92 mA
AM ..... 84 mA
Tape Play.. 130 mA

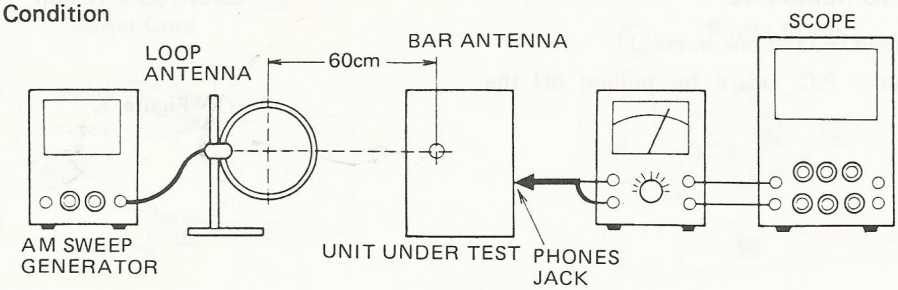

Figure 6

AM ALIGNMENT CHART (Figures 5 and 6)

Band	Step	Signal Generator Frequency	Digital Tuner Setting	Adjustment	Remarks
IF	1	450 kHz	Continue pressing manual UP or Down Button to reach Lowest Frequency.	L106 L108	Adjust for maximum indication.
AM	2	600 kHz 603 kHz (Australia)	Tune to Signal.	Ant. Coil L105	Adjust for maximum indication.
	3	1400 kHz 1404 kHz (Australia)	Tune to Signal.	Ant. Trim. C004	Adjust for maximum indication.
	4	Repeat steps 2 and 3 as required.			

FM-IF ALIGNMENT

1. Set the select switch to FM position.
2. Turn on both sweep generator and oscilloscope, and allow a fifteen-minute warm-up period.
3. Connect the RF SWEEP SIGNAL OUTPUT from the signal generator through the loop antenna to the receiver.
4. Connect the oscilloscope vertical input directly to the test point TP3 and connect the shielded lead to the test point TP4 or chassis ground.
5. Connect the SWEEP VOLTAGE OUTPUT of the sweep generator to the oscilloscope.
6. Proceed as outlined in the FM-IF ALIGNMENT CHART.

FM-IF ALIGNMENT CHART (Figure 7)

Step	Signal coupling	Equip.	Tuning	Connection	Adjust. point	Pattern
1	Connect sweep generator output to a three-turn loop antenna of 3 cm diameter.	Sweep generator of 10.7 MHz center freq. with 10.7 MHz marker.	Continue pressing manual UP or Down Button to reach Lowest Frequency.	Set scope for connecting output signal from TUN OUT to vertical axis of scope "V" and sweep generator output to horizontal axis "H".	L003 L107	Turn the IF Transformer L109 fully counterclockwise to obtain a single peak. Adjust coil L003 in order until the best single peak is obtained. Figure 8. Finally turn the coil L107 to obtain S curve. See Figure 9.

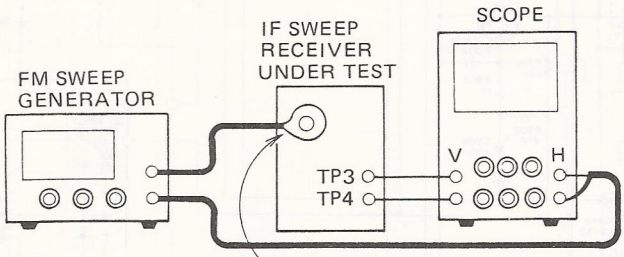

3-TURN LOOP ANTENNA LOCATED NEAR THE FM OSC. COIL.

Figure 7

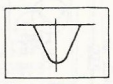

Figure 8

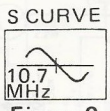

Figure 9

FM-RF ALIGNMENT

1. Turn on the signal generator and the VTVM, and allow a fifteen-minute warm-up period.
2. Connect the signal generator output through a 75 ohm dummy antenna across FM ANT.
3. Connect the VTVM across the phones jack.
4. Set the volume control to mid-position.
5. Adjust the signal generator frequency as indicated in FM-RF ALIGNMENT CHART, and maintain a sufficient signal output level to provide a measurable indication.
6. Proceed as outlined in the FM-RF ALIGNMENT CHART.

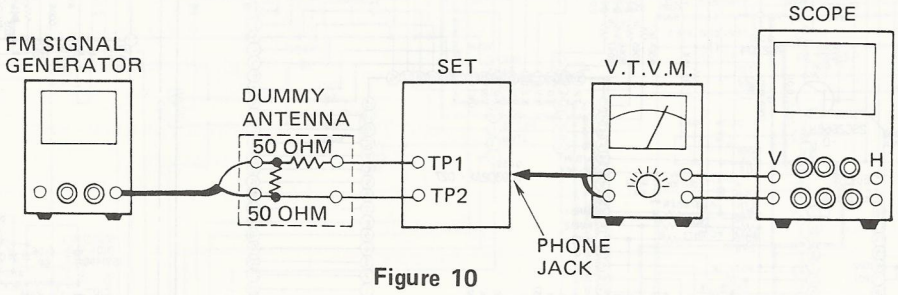

Figure 10

FM-RF ALIGNMENT CHART (Figure 10.)

Step	Signal Generator	Digital Tuner Setting	Adjustment	Remarks
1	89.9 MHz	Tune to Signal	Ant. Coil L001	Adjust for maximum output indication.
2	106.1 MHz	Tune to Signal.	Ant Trim. C001	Adjust for maximum output indication.
3	Repeat steps 1 and 2 as required.			

FREE RUN FREQUENCY ALIGNMENT

Adjust R203 under no signal condition so as to obtain 38 kHz ± 75 Hz. (Figure 11)

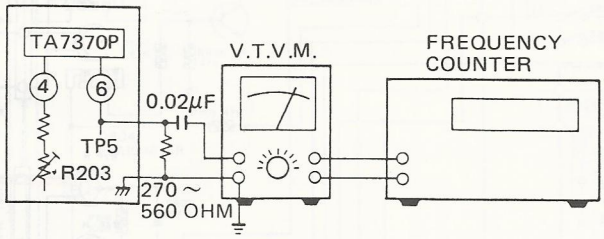

Figure 11

RECORD/PLAYBACK HEAD ADJUSTMENT

A 6.3 kHz test tape must be used for this adjustment. Connect a VTVM or an oscilloscope to the headphones jack or speaker terminal and adjust the azimuth by using a phillips screwdriver to maintain the maximum output voltage. (Figure 12)

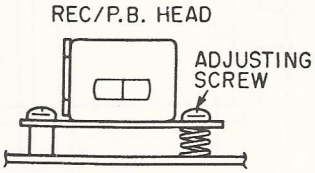

Figure 12

TAKE-UP/SUPPLY REEL TENSION

1. Insert cassette torque meter (HARTAK X-87 Torquette).
2. Press PLAY button and read torque meter. Torque should be 30 to 60 gcm.
3. Release PLAY button and press REWIND button. Torque should be 75 to 150 gcm. If necessary, clean take-up reel or drive belt with alcohol, or replace belt.

4. SCHEMATIC DIAGRAM

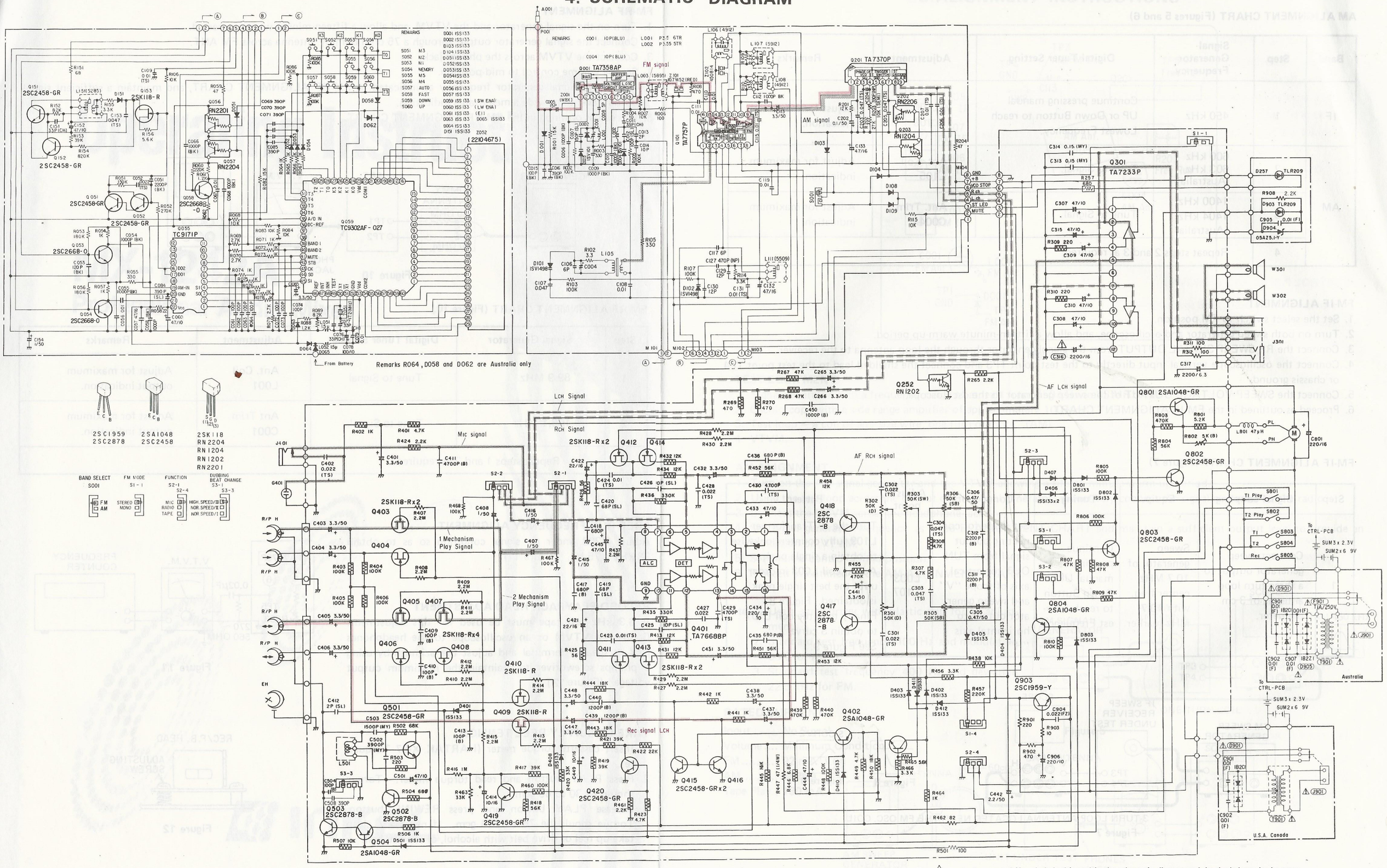

CAUTION: The ⚠ mark, the symbol No. circled with oval in the schematic diagram and the shaded area in the parts list designate components which have special characteristics important for safety and should be replaced only with types identical to those in the original circuit or specified in the parts list.

5. ELECTRICAL PARTS LOCATIONS

Q001

	FM
1	0.8
2	1.5
3	4.0
4	1.5
5	0
6	4.2
7	3.5
8	4.2
9	4.2

Q201

	FM	AM
1	0.2	0.2
2	5.0	5.1
3	5.4	5.7
4	5.4	5.7
5	0	0
6	4.8	4.7
7	5.4	4.7
8	1.1	1.0
9	1.1	1.0

Q051 Q052

	RADIO	RADIO
E	0	0.6
C	3.2	3.2
B	0.6	1.0

Q053

	FM	AM
E	0	0
C	2.5	2.6
B	0.7	0.7

Q055

	RADIO
1	0
2	2.4
3	0
4	0
5	0
6	0
7	0
8	2.4
9	0.2
10	5.2
11	0
12	0
13	0
14	5.2
15	0
16	1.0
17	1.0
18	0
19	2.4
20	0
21	2.4
22	5.3

Q101

	FM	AM
1	0	1.0
2	0	1.0
3	4.7	0
4	0.8	1.4
5	1.4	1.4
6	0.4	0.4
7	5.4	5.7
8	0	0
9	1.0	1.4
10	5.4	5.7
11	5.4	5.7
12	5.4	5.7
13	1.2	1.2
14	1.2	1.2
15	1.2	1.4
16	5.4	5.7

Q054 Q056 Q057 Q058

	FM	AM	RADIO	RADIO	RADIO
E	0	0	3.4	1.0	0
C	2.2	2.4	1.0	0	0
B	0.7	0.7	5.4	4.8	0

Q151 Q152

	RADIO	RADIO
E	0	0
C	0.5	0.5
B	0.5	12.3

Q153

	RADIO
S	3.6
G	3.2
D	12.3

Q060 Q202 Q203 Q252

	9K	10K	FM	AM	FM	AM	RADIO
E	0.4	0.4	5.4	5.7	0	0	0
C	0.3	0	4.9	5.7	5.4	0	0
B	0	0.4	5.4	0	0	6.2	3.4

Q301

1	8.6
2	4.5
3	5.1
4	0.6
5	0
6	0
7	0
8	0.6
9	0
10	4.5
11	8.6
12	9.0

Q402 Q415,416 Q417,418

	Rec	OTHER	Rec	OTHER	MIC Rec	OTHER
E	4.4	1.0	0	0	0	0
C	—	0.7	0.2	0	0	0
B	5.6	0.4	—	0.7	0.7	0

Q403,404

	TAPE I PLAY	OTHER
S	1.6	1.6
G	1.5	—
D	1.6	1.6

Q405,406 Q407,408 Q409,410 Q411,412 Q413,414

	TAPE 2 PLAY	OTHER	TAPE 2 PLAY	OTHER	Rec	OTHER	RADIO	MIC	High Speed Dubbing	OTHER
S	1.6	1.6	1.6	1.0	1.8	1.0	0.9	1.2	1.3	1.2
G	1.7	0	1.7	0	2.0	0	0	1.7	0	1.7
D	1.6	1.0	1.6	1.6	1.8	1.6	1.6	1.2	1.3	1.2

Q419 Q420 Q421

	Rec	OTHER	TAPE I	TAPE 2	TAPE, MIC RADIO
E	0	0	0	0	0
C	0	0	4.0	0	0
B	0.6	0	0	0.7	0.7

Q903

E	6.1
C	9
B	6.8

Q401

	TAPE	MIC/RADIO
1	0	0
2	5.7	5.7
3	0	0.9
4	2.1	2.5
5	1.3	1.2
6	1.2	1.2
7	0	0
8	0	0.9
9	0	0
10	0	0
11	1.2	1.2
12	1.3	1.2
13	2.1	2.5
14	0	0
15	1.0	0
16	5.8	5.8

Q501 Q502 Q503 Q504

	Rec	Rec	Rec	OTHER	Rec	OTHER
E	1.1	0	0	0	5.6	0.9
C	5.0	0	0	0	—	0.8
B	1.3	0.8	—	0.7	5.5	0.2

Q801 Q802 Q803 Q804

	High Speed Dubbing	Normal Speed Dubbing	PLAY	High Speed Dubbing	OTHER	High Speed Dubbing	Normal Speed Dubbing	Rec	OTHER
E	5.7	5.6	5.9	0	0	0	0	3.3	0
C	5.6	3.5	5.9	4.3	0	0	1.0	0	0
B	5.0	5.4	5.3	0.2	0.6	0.6	0	5.7	5.7

Q059

TA/TC·AY

BAND / PIN NO	FM	AM
1 ~ 22	2.4	2.4
23	4.9	5.1
24	0	0
25 ~ 30	0.3	0.3
31 ~ 33	0.2	0.2
34	3.4	3.5
35	0.4	0.4
36	0.7	0.7
37 ~ 38	0	0
39	0	0
40	0	5.0
41	4.9	5.0
42 ~ 45	0	0
46	2.4	3.0
47	4.9	5.1
48	4.3	4.5
49	0	0
50	2.0	2.0
51	2.0	2.0
52	0	0
53	4.9	5.1
54 ~ 60	2.4	2.4

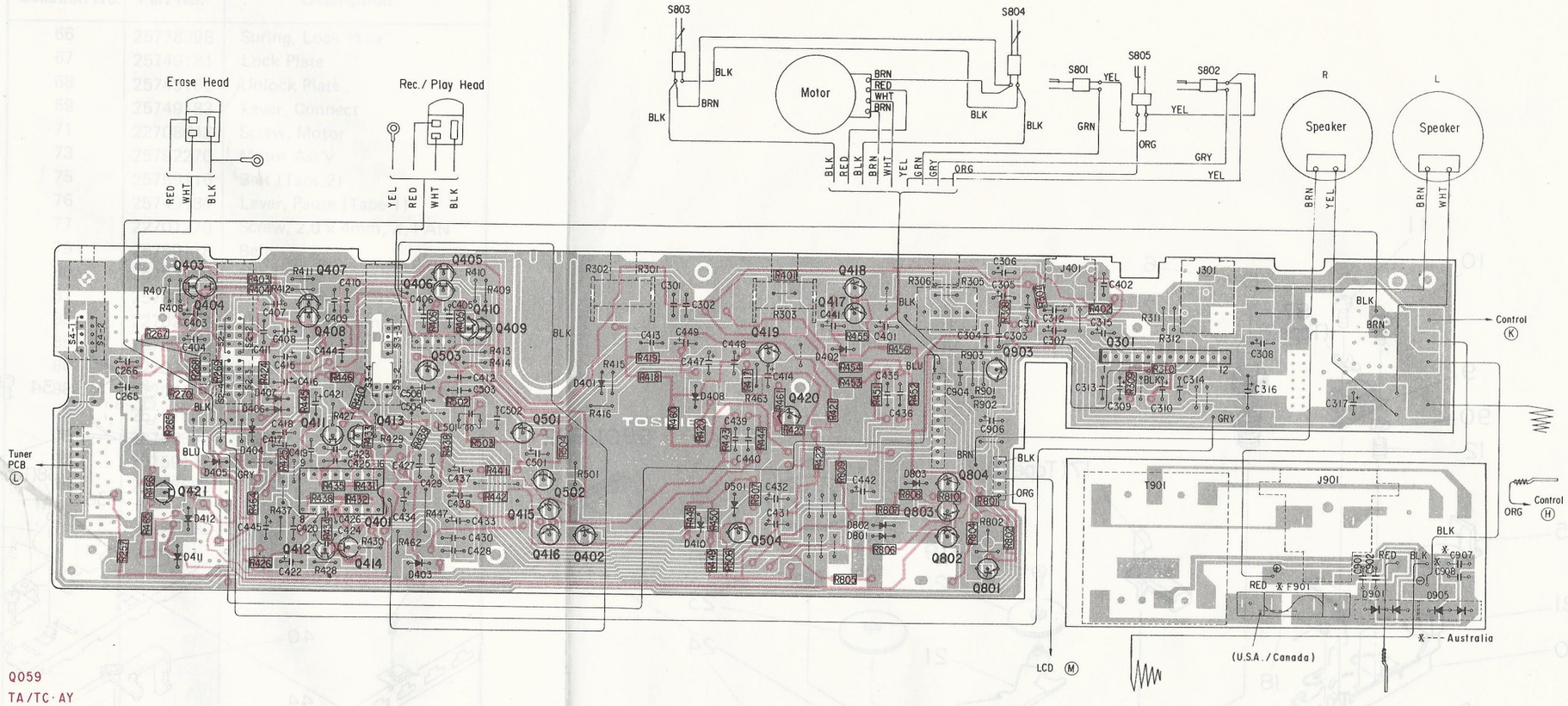

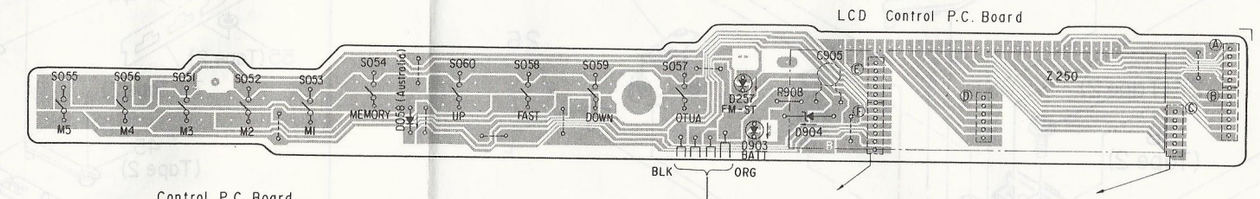

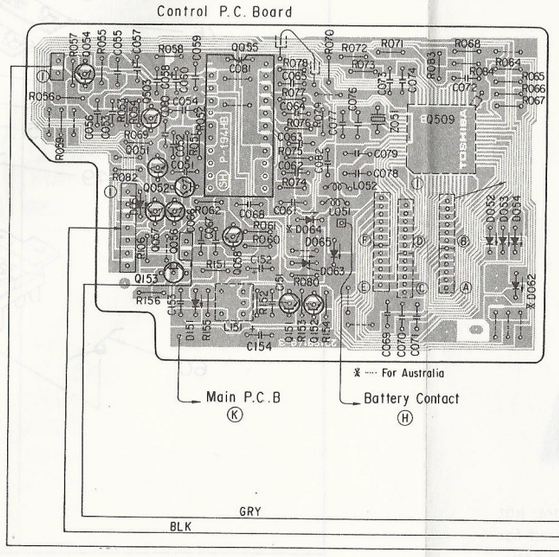

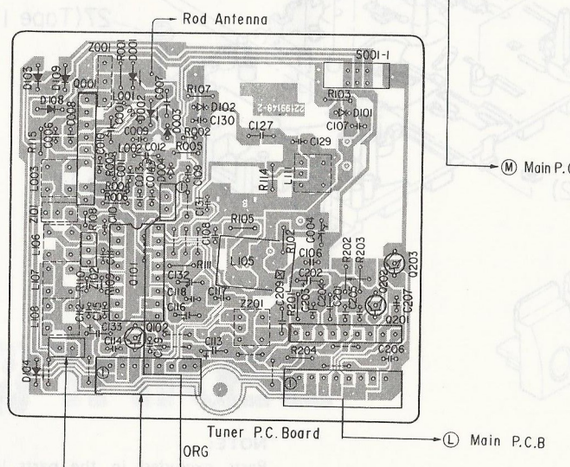

6. MECHANISM EXPLODED VIEW (UPPER)

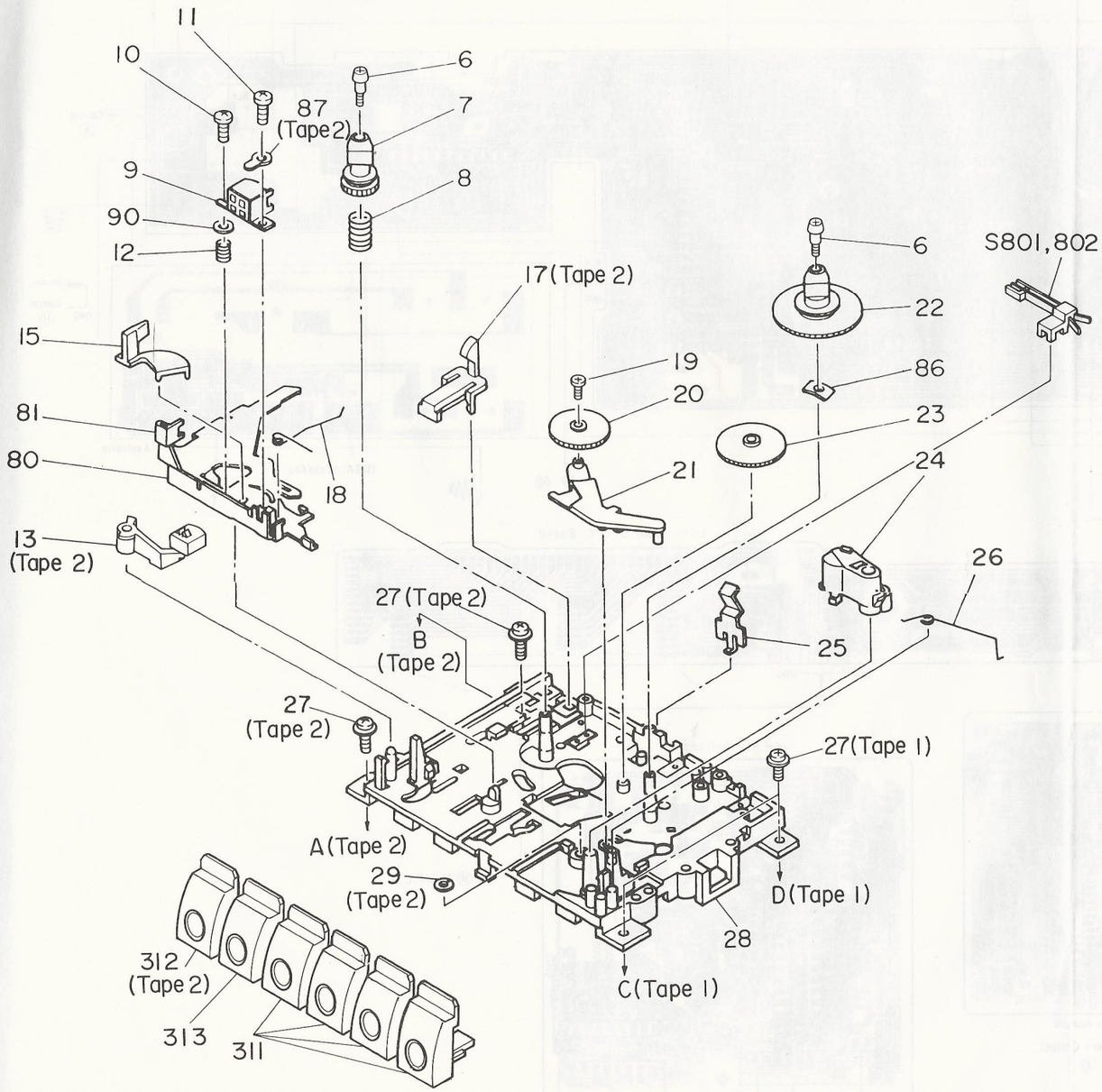

NOTE:
Parts excluded in the parts list are not stocked since they are seldom required for routine service. Some delay should be anticipated when ordering these items.

7. MECHANISM EXPLODED VIEW (LOWER)

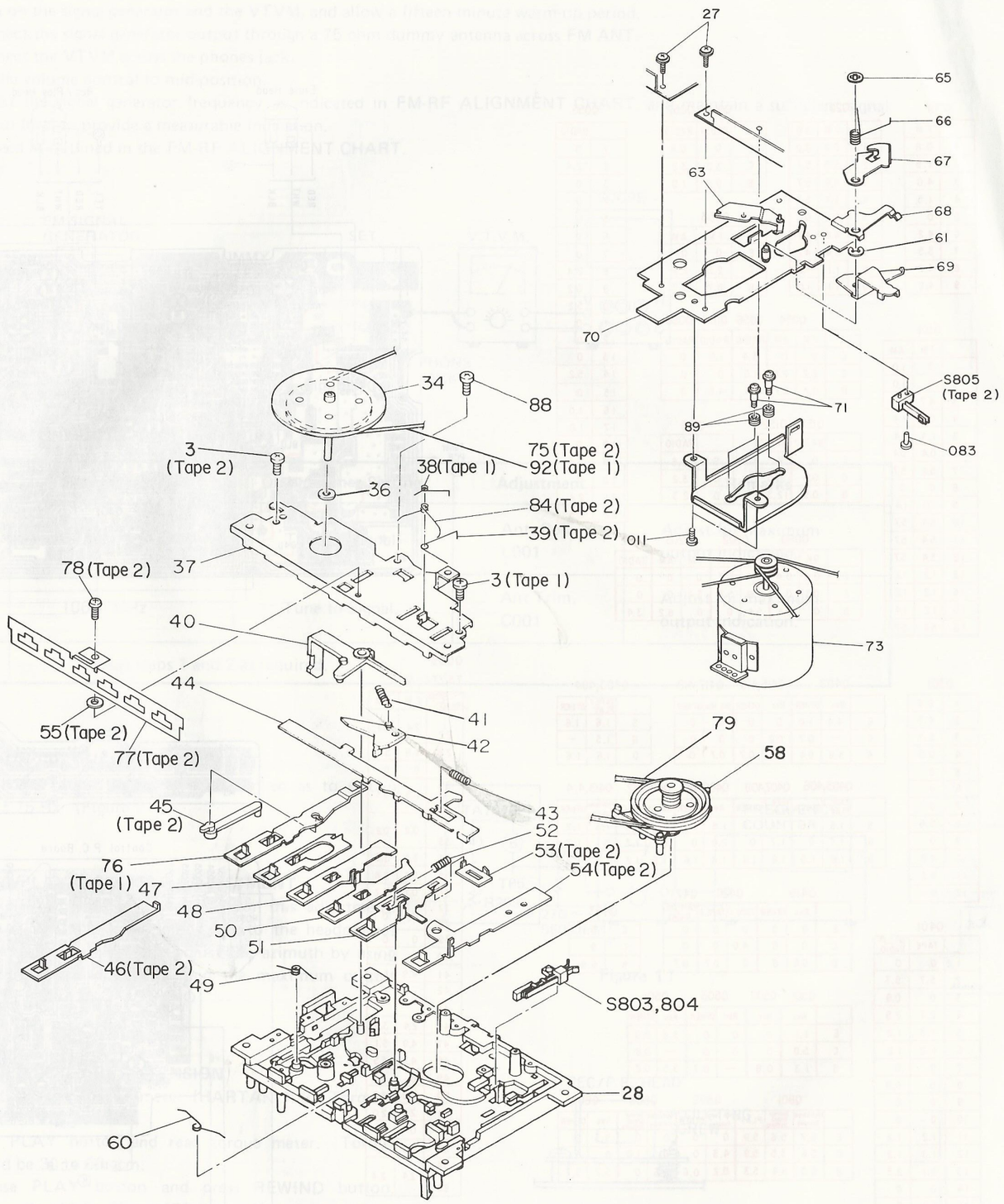

NOTE:
Parts excluded in the parts list are not stocked since they are seldom required for routine service. Some delay should be anticipated when ordering these items.

8. MECHANISM PARTS LIST

Location No.	Part No.	Description
3	22701369	Screw, 2.6 x 6mm, Z, 12PAN
6	22708681	Screw, 1.7 x 4mm, B, PAN
7	25754515	Reel Plate, Supply
8	25777565	Spring
9	22217493	Head, Record/Playback
10	22702172	Screw, 2.0 x 8mm, Z, PAN
11	22707431	Screw, 2.0 x 3mm, C, PAN
12	25777566	Spring
13	22218297	Head Ass'y, Erase (Tape 2)
14	22708686	Screw, 2.6 x 8mm, Z, FLT (Tape 2)
15	25784459	Sensor, Tape
17	25784457	Arm, Interlock (Tape 2)
18	25770049	Spring
19	22708682	Screw, 1.7 x 4mm, Z, PAN
20	25756538	Gear
21	25752236	Arm, Idler
22	25712474	Reel Ass'y, Take-up
23	25756537	Gear
24	25797200	Pressure Roller Ass'y
25	25779609	Spring
26	25778385	Spring
27	22708687	Screw, 2.6 x 6mm, Z
28	25792086	Chassis Ass'y
29	22703446	Washer
31	22707708	Screw, 2.6 x 5mm, Z, 12 BID (Tape 1)
33	22708561	Washer, 2.6mm (Tape 1)
34	25797201	Flywheel Ass'y
35	22703460	Washer (Tape 2)
36	22703445	Washer
38	25778512	Spring
39	25778513	Spring (Tape 2)
40	25782462	Arm, Eject
41	25776954	Spring
42	25784463	Arm
43	25776953	Spring
44	25749173	Lever, Function
45	25784460	Arm, Pause
46	25749167	Lever, Pause
47	25749168	Lever, Stop/Eject
48	25749178	Lever, FF
49	25778386	Spring
50	25749179	Lever, Rewind
51	25749171	Lever, Playback
52	25776952	Spring
53	25749224	Lever, Record Stop (Tape 2)
54	25749225	Stop Lever, Rec. (Tape 2)
56	22708688	Screw, 2.0 x 4mm (Tape 2)
58	25793004	Power Arm Ass'y
60	25778387	Spring
61	22708569	E Ring, 3.0mm, Z
63	25749180	Lever Ass'y, Connect
65	20798033	CS Ring, 3.0mm

Location No.	Part No.	Description
66	25778398	Spring, Lock Plate
67	25749181	Lock Plate
68	25749182	Unlock Plate
69	25749183	Lever, Connect
71	22708643	Screw, Motor
73	25792270	Motor Ass'y
75	25759116	Belt (Tape 2)
76	25749184	Lever, Pause (Tape 1)
77	22701270	Screw, 2.0 x 4mm, Z, PAN
79	25759118	Belt
80	25783440	Head Base
81	25784458	Guide, Tape
83	22702172	Screw, 2.0 x 8mm, Z, PAN
85	25726819	Spacer
86	22703447	Plate Spring
88	22708683	Screw, 1.7 x 5.5mm, B, PAN
89	25761555	Cushion, Rubber
90	25766332	Washer
92	25759117	Belt (Tape 1)
94	22708688	Screw, 2.0 x 4mm

9. CABINET EXPLODED VIEW

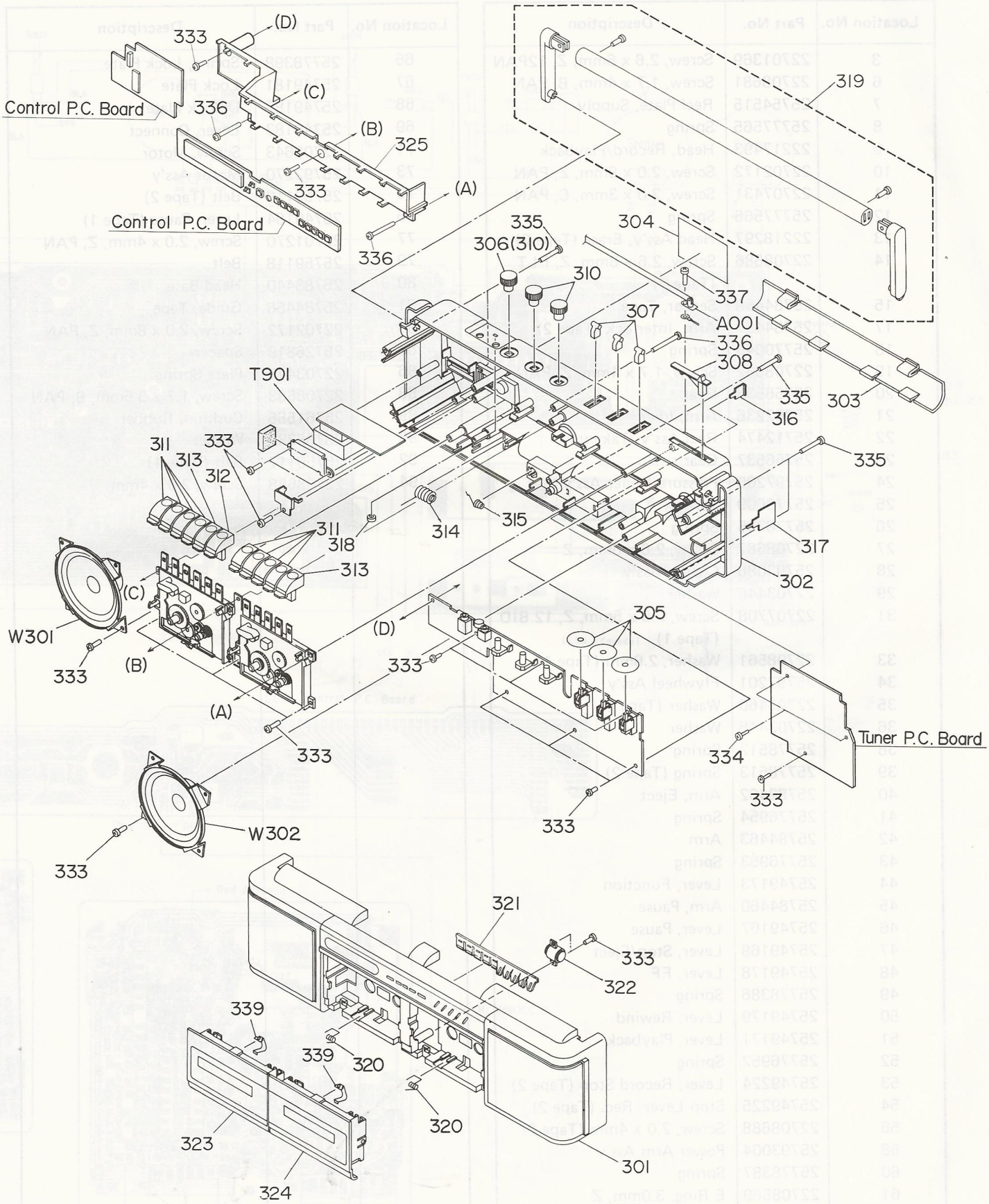

NOTE:
Parts excluded in the parts list are not stocked since they are seldom required for routine service. Some delay should be anticipated when ordering these items.

10. CABINET PARTS LIST

Location No.	Part No.	Description
301	25889281	Front Cabinet Ass'y BLK (USA, Canada)
301	25889322	Front Cabinet Ass'y WHT (USA)
301	25889323	Front Cabinet Ass'y PNK (USA)
301	25889324	Front Cabinet Ass'y LAVENDER (USA)
301	25889325	Front Cabinet Ass'y BLK (Australia)
301	25889326	Front Cabinet Ass'y WHT (Australia)
302	25889282	Back Cabinet Ass'y BLK (USA, Canada)
302	25889330	Back Cabinet Ass'y WHT (USA)
302	25889331	Back Cabinet Ass'y PNK (USA)
302	25889332	Back Cabinet Ass'y LAVENDER (USA)
302	25889333	Back Cabinet Ass'y BLK (Australia)
302	25889334	Back Cabinet Ass'y WHT (Australia)
303	25887214	Battery Cover, for Black
303	25887252	Battery Cover, for White (USA/Australia)
303	25887498	Battery Cover, for Pink (USA)
303	25887499	Battery Cover, for Lavender (USA)
304	25809848	Name Label (Australia)
305	25857393	Cover, Switch
306	25888106	Knob (PNK) for Pink/ Lavender VOL. (USA)
306	25888110	Knob (BLU) for White (USA/Australia)
307	25888107	Knob (GRY) for White (USA/Australia)
307	25888172	Knob (DARK GRY) for Black Lever SW
307	25888326	Knob (WHT) for Pink/ Lavender (USA)
308	25888108	Knob (BLK) for Black Band Select
308	25888135	Knob for White/Pink/Lavender
310	25888157	Knob (Dark GRY) for Black Tone
310	25888324	Knob (GRY) for White (USA/Australia)
310	25888325	Knob (WHT) for Pink/ Lavender
311	25888113	Button (BLK) for Black
311	25888136	Button (DARK GRY) for White (USA/Australia)
311	25888328	Button (WHT) for Pink (USA)
311	25888329	Button (Lavender) for Lavender (USA)
312	25888116	Button (BLK) for Black REC.
312	25888138	Button (WHT), REC. for White (USA/Australia)
312	25888330	Button (PNK) for Pink REC. (USA)
312	25888331	Button (Lavender) for Lavender REC. (USA)
313	25888119	Button (BLK) for Black (USA/Australia)
313	25888139	Button (WHT), Play for White Play, WHT
313	25888332	Button (PNK) for Pink Play (USA)
313	25888333	Button (Lavender) for Lavender Play (USA)
314	22725295	Spring Battery
315	22725272	Spring, Battery
316	25779645	Contact, Battery
317	25779654	Contact, Battery
318	25857288	Cushion
319	25815330	Handle Ass'y, for White (USA/Australia)
319	25815339	Handle Ass'y, for Pink (USA)
319	25815340	Handle Ass'y, for Lavender (USA)
320	25778453	Spring
321	25888310	Button, Tuning Priset Station
322	25885971	Damper
323	25889283	Cassette Cover Ass'y Left, BLK
323	25889341	Cassette Cover Ass'y, Left, WHT (USA, Australia)
323	25889342	Cassette Cover Ass'y, Left PNK (USA)
323	25889343	Cassette Cover Ass'y, Left Lavender (USA)
324	25889284	Cassette Cover Ass'y, BLK
324	25889344	Cassette Cover Ass'y, Right (USA/Australia) WHT
324	25889345	Cassette Cover Ass'y, Right PNK (USA)
324	25889346	Cassette Cover Ass'y, Right Lavender (USA)
325	22714564	Frame
333	22707802	Screw, 3.0 x 12mm, Z, 2DTBID
334	22707835	Screw, 3.0 x 16mm, Z, 2DTBID
335	22707865	Screw, 3.0 x 20mm,Z, 2DTBID
336	22708337	Screw, 3.0 x 35mm, Z, 2DTBID
337	22708185	Screw, 3.0 x 12mm, N, 2DTBID
338	22707804	Screw, 3.0 x 12mm, B, 2DTBID, BLK Cabinet
339	22725288	Spring
340	22708184	Screw, 3.0 x 10mm, N, 2DTBID

11. PARTS LIST

CAUTION: The ⚠ mark, the symbol No. circled with oval in the schematic diagram and the shaded area in the parts list designate components which have special characteristics important for safety and should be replaced only with types identical to those in the original circuit or specified in the parts list.

Location No.	Part No.	Description
	IC/TR	
Q001	B0325502	IC, TA7358AP
Q051, 052	A6332440	Transistor, 2SC2458-GR
Q053, 054	A6332530	Transistor, 2SC2668-O
Q055	B0411710	IC, TC9171
Q056	A6012010	Transistor, RN2201
Q057	A6012040	Transistor, RN2204
Q058	A6332530	Transistor, 2SC2668-O
Q059	**22117888**	**IC, TC9302AF-027-BS**
Q101	B0358070	IC, TA7757P
Q151, 152	A6332440	Transistor, 2SC2458-GR
Q153	A6041970	Transistor, 2SK118NEW-R, FET
Q201	B0325620	IC, TA7370P
Q202	A6012060	Transistor, RN2206
Q203	A6002040	Transistor, RN1204, Chip
Q252	A6002020	Transistor, RN1202
Q301	B0319970	IC, TA7233P
Q401	B0356695	IC, TA7668BP
Q402	A6534440	Transistor, 2SA1048-GR
Q403, 404, 405, 406, 407, 408, 409, 410, 411, 412, 413, 414	A6041970	Transistor, 2SK118NEW-R, FET
Q415, 416	A6332440	Transistor, 2SC2458-GR
Q417, 418	A6342210	Transistor, 2SC2878-B
Q419, 420 421, 501	A6332440	Transistor, 2SC2458-GR
Q502, 503	A6342210	Transistor, 2SC2878-B
Q504, 801	A6534440	Transistor, 2SA1048-GR
Q802, 803	A6332440	Transistor, 2SC2458-GR
Q804	A6534440	Transistor, 2SA1048-GR
Q903	A6319300	Transistor, 2SC1959NEW-Y
	DIODE	
D001, 002	22119248	Diode, 1SS133.T-77
D003, 004	A7288690	Diode, 1SV101
D051, 052, 053, 054, 063, 064, 065	22119248	Diode, 1SS133.T-77
D101, 102	**22119207**	Diode, 1SV149-B (Pair)
D103, 104	22119248	Diode, 1SS133.T-77
D108, 109		
D151	22119248	Diode, 1SS133.T-77

Location No.	Part No.	Description
D257	A8603150	Diode, TLR209, LED
D401, 402, 403, 404, 405, 406, 407, 408, 410, 411, 412, 501, 801, 802, 803	22119248	Diode, 1SS133.T-77
D901	A7682012	Diode, 1B2C1(T)
D903	A8603150	Diode, TLR209, LED
D904	A7112320	Diode, 05AZ5.1-Y, Zener
⚠ D905	A7682052	Diode, 1B2Z1(T)
	ELECTRICAL PARTS	
A001	22124807	Rod Antenna
EP01	22165047	Holder, Fuse
⚠ F901	22144337	Fuse, 250V,1A,T(Australia)
G401	22154273	Built-in Microphone
J301	22198214	Jack, 3.5mm, Headphone
J401	22198276	Jack, 3.5mm, Microphone
⚠ J901	22169187	AC Socket (Europe)
⚠ J901	**22169189**	**AC Socket (USA, Canada)**
L001	22294722	Coil, FM ANT.
L002	22294634	Coil, FM OSC.
L003	22265895	IF Transformer, FM
L051, 052	22291413	Choke Coil, 1.5UH
L105	**22243107**	**Coil, Bar Antenna MW ANT.**
L106	22264912	IF Transformer, AM
L107	22265912	IF Transformer, FM
L108	22264912	IF Transformer, AM
L111	22245509	Coil, Oscillator
L151	22235285	Coil, Oscillator
L501	22235227	Coil, Oscillator, Tape Bias
L801	22291431	Choke Coil, Motor
S001	**22196865**	**Slide Switch Band Select**
S051	22196884	Key Switch, M3
S052	22196884	Key Switch, M2
S053	22196884	Key Switch, M1
S054	22196884	Key Switch, Memory
S055	22196884	Key Switch, M5
S056	22196884	Key Switch, M4
S057	22196884	Key Switch, Auto
S058	22196884	Key Switch, Fast
S059	22196884	Key Switch, Down
S060	22196884	Key Switch, Up
S1	22196966	Lever Switch, FM Mode
S2	22196979	Lever Switch, Function
S3	22196979	Lever Switch, Dubbing
S801	22196957	Leaf Switch, T1, Play

Location No.	Part No.	Description
S802	22196957	Leaf Switch, T2, Play
S803	22196907	Leaf Switch, T1, Main
S804	22196907	Leaf Switch, T2, Main
S805	22196958	Leaf Switch, Record
T901	22224959	Power Transformer (USA, Canada)
T901	22224962	Power Transformer (Australia)
W301	22152648	Speaker, 10cm, WHT
W301	22152649	Speaker, 10cm, BLK
W302	22152648	Speaker, 10cm, WHT
W302	22152649	Speaker, 10cm, BLK
Z001	22153377	Filter, RF, FM
Z051	22153398	Oscillator, Crystal, 7.2 MHz
Z052	22104682	Liquid Crystal Display
Z101	22153320	Filter, Ceramic, 10.7MS2A
Z102	22153449	Filter, Ceramic, AM

CAPACITORS

D =±0.5pF, J = ±5%, K = ±10%, M = ±20, Z = –20+80%

ABBREVIATIONS: CD = Ceramic Disk, BL = Barrier Layer, EL = Electrolytic, MY = Mylar, PP = Polypropylene

Location No.	Part No.	Description
C001	22309252	Trimmer Capacitor, 10pF, FM ANT.
C004	22309252	Trimmer Capacitor, 10pF, MW ANT.
C006	20343102	CD, 1000pF, 50V, K
C007	20311151	CD, 150pF, 50V, J
C008	20311509	CD, 5pF, 50V, D
C009	20343102	CD, 1000pF, 50V, K
C010	20343102	CD, 1000pF, 50V, K
C011	20322330	CD, 33pF, 50V, J (CH)
C012	20311101	CD, 100pF, 50V, J
C013	20311209	CD, 2pF, 50V, D
C014	20311100	CD, 10pF, 50V, D
C015	20343101	CD, 100pF, 50V, K
C016	20343391	CD, 390pF, 50V, K
C051	20343222	CD, 2200pF, 50V, K
C052	20318223	BL, 0.022mfd, 20V, K
C053	20343121	CD, 120pF, 50V, K
C054, 055	20343102	CD, 1000pF, 50V, K
C056	20341103	CD, 0.01mfd, 50V, Z
C057	20414470	EL, 47mfd, 10V
C058	20343102	CD, 1000pF, 50V, K
C060	20414470	EL, 47mfd, 10V
C061, 062, 063, 064	20343101	CD, 100pF, 50V, K
C066	20343102	CD, 1000pF, 50V, K
C067	20341103	CD, 0.01mfd, 50V, Z
C068	20343102	CD, 1000pF, 50V, K
C069, 070, 071	20343391	CD, 390pF, 50V, K
C072, 073, 074	20343101	CD, 100pF, 50V, K

Location No.	Part No.	Description
C076, 077	20312330	CD, 33pF, 50V, J (CH)
C078	20414101	EL, 100mfd, 10V
C079	20341103	CD, 0.01mfd, 50V, Z
C081	20343391	CD, 390pF, 50V, K
C084	20311391	CD, 390pF, 50V, J
C085	20343391	CD, 390pF, 50V, K
C106	20311609	CD, 6pF, 50V, J
C107	22360881	BL, 0.047mfd, 16V, Z
C108, 109 110, 111	20318103	BL, 0.01mfd, 25V, K
C112	20343102	CD, 1000pF, 50V, K
C113	20419339	EL, 3.3mfd, 50V
C115	20318103	BL, 0.01mfd, 25V, K
C116	20415220	EL, 22mfd, 16V
C117	20311609	CD, 6pF, 50V, J
C119	20311103	CD, 0.01mfd, 50V, J
C127	20381471	PP, 470pF, 100V, J
C129, 130	20311120	CD, 12pF, 50V, J
C131	20318103	BL, 0.01mfd, 25V, K
C132, 133,	20414470	EL, 47mfd, 10V
C151	20312330	CD, 33pF, 50V, J (CH)
C152	20414470	EL, 47mfd, 10V
C153	20318473	BL, 0.047mfd, 25V, K
C154	20418109	EL, 1mfd, 50V
C202	20419108	EL, 0.1mfd, 50V
C203	22360881	BL, 0.047mfd, 16V, Z
C204	20381391	PP, 390pF, 100V, J
C205	22360881	BL, 0.047mfd, 16V, Z
C206, 207	20318103	BL, 0.01mfd, 25V, K
C265, 266	20418339	EL, 3.3mfd, 50V
C301, 302	20319223	BL, 0.022mfd, 25V, M
C303, 304	20319473	BL, 0.047mfd, 25V, M
C305, 306	20418478	EL, 0.47mfd, 50V
C307, 308, 309, 310	20414470	EL, 47mfd, 10V
C311, 312	20343222	CD, 2200pF, 50V, K
C313, 314	20371154	MY, 0.15mfd, 100V, J
C315	20414470	EL, 47mfd, 10V
⚠ C316	20415222	EL, 2200mfd, 16V
C317	20414222	EL, 2200mfd, 10V
C401	20418339	EL, 3.3mfd, 50V
C402	20319223	BL, 0.022mfd, 25V, M
C403, 404, 406	20418339	EL, 3.3mfd, 50V
C407, 408	20428109	EL, 1mfd, 50V
C409, 410	20343101	CD, 100pF, 50V, K
C411	20343472	CD, 4700pF, 50V, K
C412	20311209	CD, 2pF, 50V, D
C413	20343101	CD, 100pF, 50V, K
C414	20415100	EL, 10mfd, 16V
C415, 416	20428109	EL, 1mfd, 50V
C417, 418	20343681	CD, 680pF, 50V, K
C419, 420	20311680	CD, 68pF, 50V, J
C421, 422	20415220	EL, 22mfd, 16V
C423, 424	20319103	BL, 0.01mfd, 25V, Z

Location No.	Part No.	Description
C425, 426	20311100	CD, 10pF, 50V, D
C427, 428	20319223	BL, 0.022mfd, 25V, M
C429, 430	20319472	BL, 4700pF, 25V, M
C431, 432	20418339	EL, 3.3mfd, 50V
C433	20414470	EL, 47mfd, 10V
C434	20414221	EL, 220mfd, 10V
C435, 436	20343681	CD, 680pF, 50V, K
C437, 438	20418339	EL, 3.3mfd, 50V
C439, 440	20343122	CD, 1200pF, 50V, K
C441	20418339	EL, 3.3mfd, 50V
C442	20418229	EL, 2.2mfd, 50V
C444, 445	20414470	EL, 47mfd, 10V
C447, 448	20418339	EL, 3.3mfd, 50V
C449	20415100	EL, 10mfd, 16V
C450	20343102	CD, 1000pF, 50V, K
C501	20414470	EL, 47mfd, 10V
C502	20371392	MY, 3900pF, 50V, J
C503	20371152	MY, 1500pF, 50V, J
C504	20311101	CD, 100pF, 50V, J
C801	20415221	EL, 220mfd, 16V
C901, 902	20341103	CD, 0.01mfd, 50V, Z
C904, 905	20341223	CD, 0.022mfd, 50V, Z
C906	20414221	EL, 220mfd, 10V
C907, 908	20341103	CD, 0.01mfd, 50V, Z

RESISTORS

Resistors are Fixed Carbon Film, 1/6W ±5%, unless otherwise noted.
K = 1000, M = 1000000

Location No.	Part No.	Description
R001	20512153	CF, 15K ohm, 1/6W, J
R002	20512104	CF, 100K ohm, 1/6W, J
R003	20512331	CF, 330 ohm, 1/6W, J
R004	20512100	CF, 10 ohm, 1/6W, J
R005	20512104	CF, 100K ohm, 1/6W, J
R006	20512101	CF, 100 ohm, 1/6W, J
R007	20512103	CF, 10K ohm, 1/6W, J
R051	20512154	CF, 150K ohm, 1/6W, J
R052	20512274	CF, 270K ohm, 1/6W, J
R053	20512184	CF, 180K ohm, 1/6W, J
R054	20512102	CF, 1K ohm, 1/6W, J
R055	20512331	CF, 330 ohm, 1/6W, J
R056	20512184	CF, 180K ohm, 1/6W, J
R057	20512102	CF, 1K ohm, 1/6W, J
R058	20512220	CF, 22 ohm, 1/6W, J
R059	20512470	CF, 47 ohm, 1/6W, J
R060	20512224	CF, 220K ohm, 1/6W, J
R061	20512122	CF, 1.2K ohm, 1/6W, J
R062	20512101	CF, 100 ohm, 1/6W, J
R064, 065, 066, 067	20512102	CF, 1K ohm, 1/6W, J
R068, 069	20512272	CF, 2.7K ohm, 1/6W, J
R070	20512103	CF, 10K ohm, 1/6W, J
R071, 072, 073, 074, 075, 076, 077, 078	20512102	CF, 1K ohm, 1/6W, J
R079	20512272	CF, 2.7K ohm, 1/6W, J
R080	20512103	CF, 10K ohm, 1/6W, J
R082	20512153	CF, 15K ohm, 1/6W, J
R083, 084	20512103	CF, 10K ohm, 1/6W, J
R085, 086, 087	20512104	CF, 100K ohm, 1/6W, J
R088	20512122	CF, 1.2K ohm, 1/6W, J
R089	20512822	CF, 8.2K ohm, 1/6W, J
R102	20512339	CF, 3.3 ohm, 1/6W, J
R103	20512104	CF, 100K ohm, 1/6W, J
R105	20512331	CF, 330 ohm, 1/6W, J
R106	20512103	CF, 10K ohm, 1/6W, J
R107	20512104	CF, 100K ohm, 1/6W, J
R108	20512471	CF, 470 ohm, 1/6W, J
R109	20512222	CF, 2.2K ohm, 1/6W, J
R110	20512333	CF, 33K ohm, 1/6W, J
R114	20512332	CF, 3.3K ohm, 1/6W, J
R115	20512103	CF, 10K ohm, 1/6W, J
R151	20512680	CF, 68 ohm, 1/6W, J
R152	20512823	CF, 82K ohm, 1/6W, J
R153	20512393	CF, 39K ohm, 1/6W, J
R154	20512824	CF, 820K ohm, 1/6W, J
R155	20512332	CF, 3.3K ohm, 1/6W, J
R156	20512562	CF, 5.6K ohm, 1/6W, J
R201	20512123	CF, 12K ohm, 1/6W, J
R202	20512273	CF, 27K ohm, 1/6W, J
R203	22658761	Variable, Semi Fixed,10K-B, Free Run
R204	20512470	CF, 47 ohm, 1/6W, J
R301	22651674	Variable, 50K ohm, B, with R302, Tone
R303	22651675	Variable, 50K ohm, SW, Balance
R305	22651680	Variable, 50K ohm, B, with R306, VOL.
R311, 312	20512101	CF, 100 ohm, 1/6W, J
R407, 408, 409, 410, 411, 412, 413, 414, 415	20512225	CF, 2.2M ohm, 1/6W, J
R416	20512105	CF, 1M ohm, 1/6W, J
R427, 428, 429, 430, 437	20512225	CF, 2.2M ohm, 1/6W, J
R447	20512470	CF, 47 ohm, 1/6W, J
R462	20512820	CF, 82 ohm, 1/6W, J
R463	20512333	CF, 33K ohm, 1/6W, J
R467, 468	20512104	CF, 100K ohm, 1/6W, J
R501	20512101	CF, 100 ohm, 1/6W, J

Location No.	Part No.	Description
R802	22658760	Variable, Semi Fixed, 5K-B, Motor Speed
R901	20512221	CF, 220 ohm, 1/6W, J
R902	20512471	CF, 470 ohm, 1/6W, J
R903	20512100	CF, 10 ohm, 1/6W, J
R908	20512152	CF, 1.5K ohm, 1/6W, J
ACCESSORIES		
⚠ AC01	22176624	Power Cord (USA, Canada)
⚠ AC01	22176720	Power Cord (Australia)
AC02	22908443	Owner's Manual (USA)
AC02	22908444	Owner's Manual (Canada)
AC02	22908447	Owner's Manual (Australia)

Location No.	Part No.	Description