TOSHIBA RADIO CASSETTE RECORDER

SERVICE DATA MODEL RT-221R

FILE NO. 009

SPECIFICATIONS

RADIO RECEIVER

Frequency Range	MW 530～1600 KHz SW1 2.3～7.5 MHz SW2 7.5～22 MHz
Intermediate Frequency	455 KHz
Antenna	Ferrite Core Antenna for MW, SW1 Telescopic Antenna for SW2

CASSETTE RECORDER

Usable Tape	Compact Cassette
Track	2 track
Recording System	AC bias at 55 KHz 0.35 mA
Erasing System	AC erase
Fast Forward and Rewind Time	240 sec. maximum for C-60 Cassette (FF) 120 sec. maximum for C-60 Cassette (REW)
Head	Record/Playback head (laminated core) Erase head (ferrite core)

GENERAL

Transistor and Diod	Transistor 13, Diode 11
Audio Power Output	1.2 watts (maximum)
Power Consumption	3 watts (maximum)
Jack	MICROPHONE LINE INPUT MONITOR (EARPHONE) REMOTE EXTERNAL DC 6volts
Speaker	3 1/2" 8 ohm
Power Source	AC 110/120/220/240 V 50/60 Hz, C size battery × 4
Dimensions	10 3/4" ×10 1/2" ×3 1/6"
Weight	6.4 lbs

TOKYO SHIBAURA ELECTRIC CO., LTD.

2-1, 5-CHOME, GINZA, CHUO-KU, TOKYO, JAPAN

TABLE OF CONTENTS

SECTION 1

CHASSIS SEPARATION

1. Remove the battery cover, back cover A and back cover B.
2. Remove the four (4) screws marked (※) shown in figure 1.
3. Remove the back cover.
4. Remove the wiring of the telescopic antenna and wire.
5. Remove the wiring of the speaker in the audio section.
7. Remove the nine (9) screws marked (★), the chassis can then be separated from the cabinet as shown in figures 2 and 3.

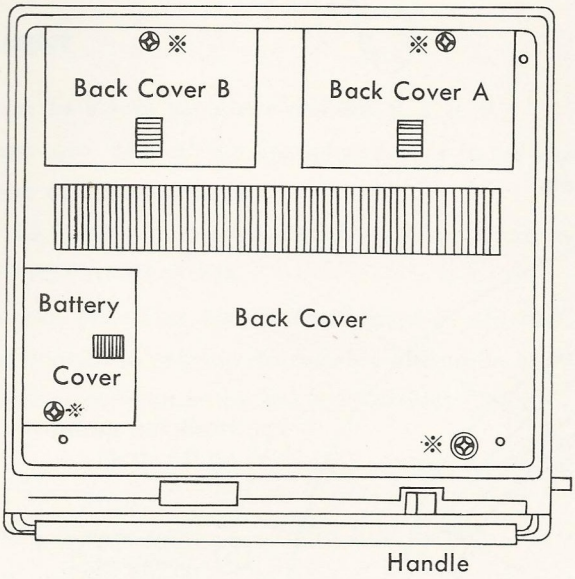

Figure 1. BACK REMOVAL

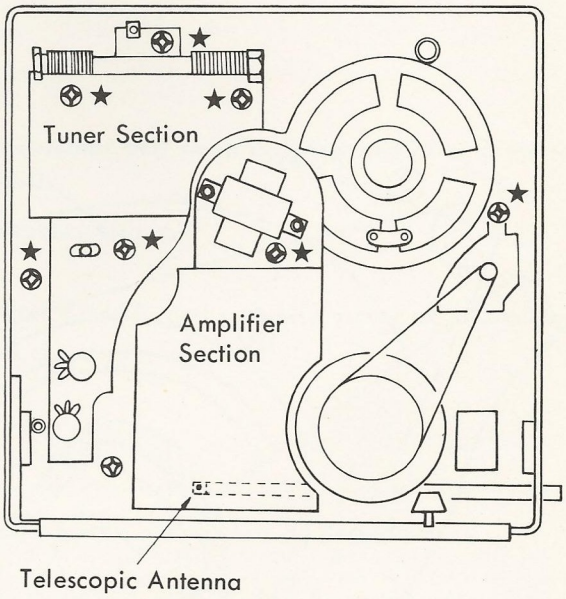

Figure 2. CHASSIS REMOVAL

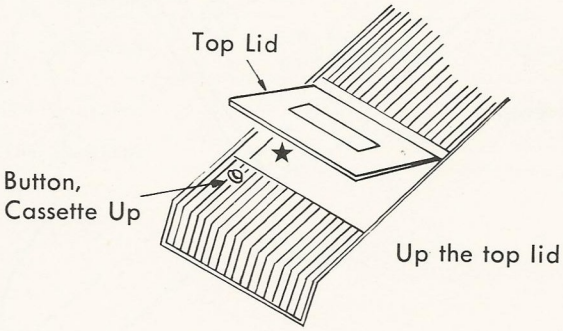

Figure 3. CHASSIS REMOVAL

SECTION 2

DIAL CORD RESTRINGING INSTRUCTIONS

1. The dial cord with the spring passes through the drum eye.
2. Set the variable capacitor to the minimum capacitance (plate fully open)
3. Wind the cord in the numerical sequence as indicated in figure 4.

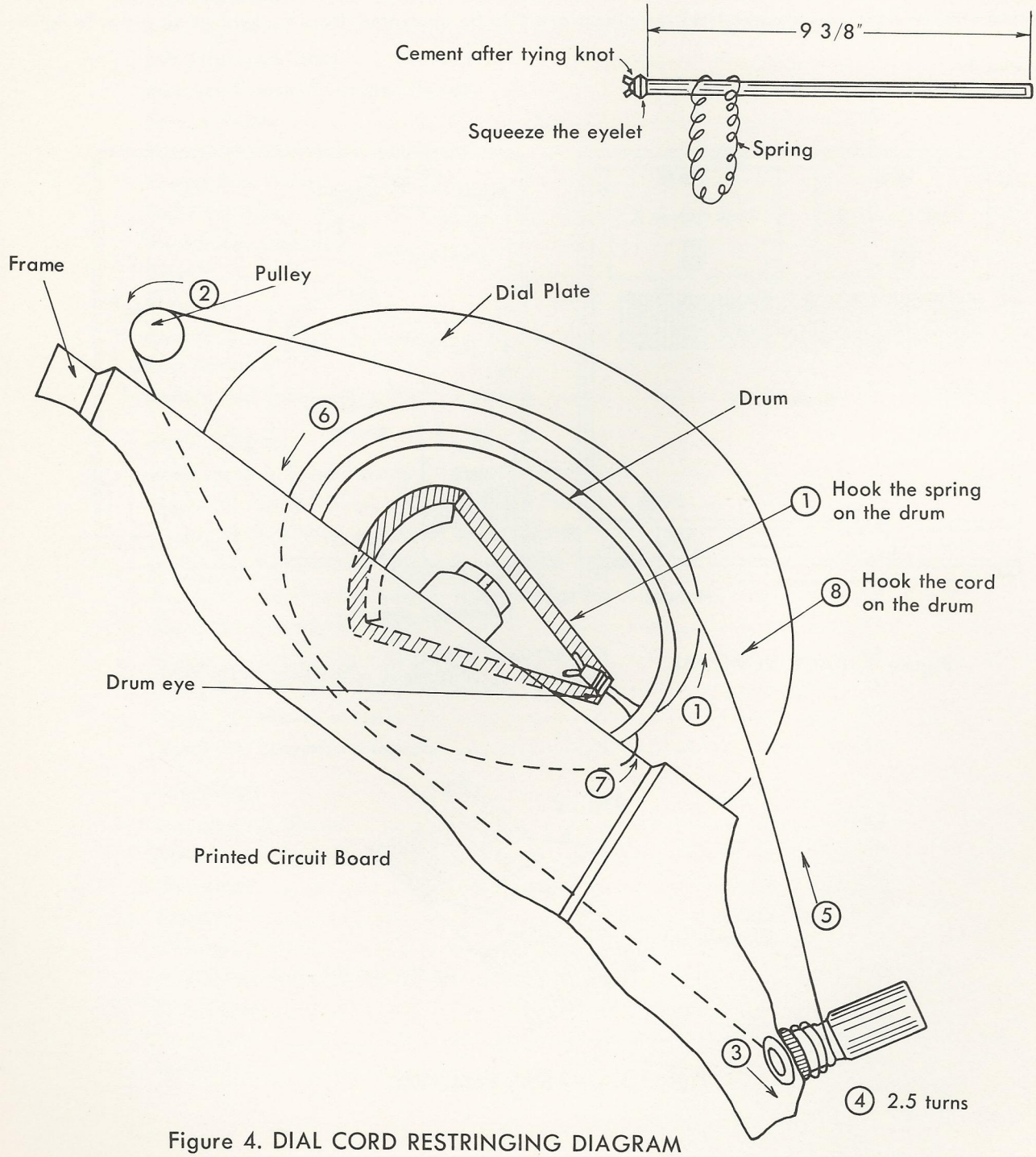

Figure 4. DIAL CORD RESTRINGING DIAGRAM

SECTION 3

ALIGNMENT INSTRUCTIONS

NOTE

Alignment should be performed only when batteries are in a fullcharge condition.

TEST EQUIPMENT

1. AM Signal Generator.
2. FM Signal Generator with 10.7 MHz marker signal.
3. Sweep Signal Generator (10.7 MHz ±200 kHz) with 10.7 MHz marker signal.
4. Oscilloscope with wide range amplifier (approximately 100 kHz).
5. Test loop, a coil of any size wire one turn or more.
6. VTVM and DC VOLTMETER.

AM ALIGNMENT

1. Turn on the signal generater and the V. T. V. M.
2. Connect one end of the uninsulated wire to the signal generator and wrap the other end around the radio antenna coil several turns.
3. After 15 minutes, connect the AC V. T. V. M. across the speaker voice coil.
4. Set SELECT switch to AM.
5. Set signal generator frequency as listed in AM ALIGNMEMT CHART, and maintain output at a level barely strong enough to provide measurable indication on V. T. V. M.
6. Proceed as outlined in the AM ALIGNMENT CHART.

AM ALIGNMENT CHART

Band	Step	Signal Generator Frequency	Radio Dial Setting	Adjustment	Remarks
IF	1	455 kHz	Tuning Gang Closed Lowest Frequency	IT 1, 2, 3	Adjust for maximum indication
AM	2	520 kHz	Tuning Gang Closed Lowest Frequency	OSC (AM) L3	Adjust for maximum indication
	3	1660 kHz	Tuning Gang Open Highest Frequency	OSC Trim TC1	Adjust for maximum indication
	4	Repeat steps 2 and 3 as required			
	5	600 kHz	Tune to Signal	Ant. Coil L1-MW	Adjust for maximum indication
	6	1400 kHz	Tune to Signal	Ant. Trim TC2	Adjust for maximum indication
	7	Repeat steps 5 and 6 as required			

SW ALIGNMENT CHART

Band	Step	Signal Generator Frequency	Radio Dial Setting	Adjustment	Remarks
SW1	1	2.2 MHz	Tuning Gang Closed Lowest Frequency	L4	Adjust for maximum indication
	2	7.8 MHz	Tuning Gang Open Highest Frequency	TC3	Adjust for maximum indication
	3	Repeat steps 1 and 2 as required			
	4	2.8 MHz	Tune for signal	L1-SW1	Adjust for maximum indication
	5	6.5 MHz		TC4	Adjust for maximum indication
	6	Repeat steps 4 and 5 as required			
SW2	1	7.3 MHz	Tuning Gang Closed Lowest Frequency	L5	Adjust for maximum indication
	2	23 MHz	Tuning Gang Open Highest Frequency	TC5	Adjust for maximum indication
	3	Repeat steps 1 and 2 as required			
	4	8.5 MHz	Tune for signal	L2	Adjust for maximum indication
	5	20 MHz		TC6	Adjust for maximum indication
	6	Repeat steps 4 and 5 as required			

MISTAKEN ERASURE PROTECTION DEVICE

See Figure 5 and Exploded View-mechanism.

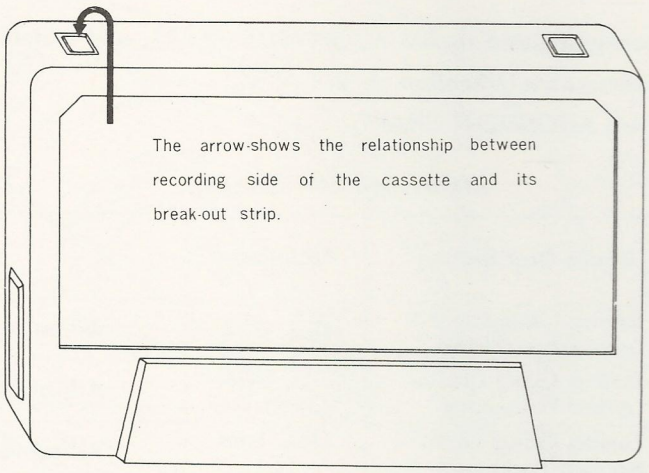

Figure 5. MISTAKEN ERASURE PROTECTIO DEVICE

There is an erasure prevention plastic fillet on the cassette tape case so that the recorded tape can not be erased by mistake.

When this plastic fillet is broken off, the erasure protection lever (58) enters the cassette tape groove due to the lever spring (59); thus the record slider makes contact with the protection lever even if the record button is depressed, and valuable tapes which have been recorded can not be erased by mistake, as the record button can not be depressed.

RECORD/PLAYBACK HEAD ADJUSTMENT

A 6.3 KHz standard tape must be used for these adjustments.

Connect a VTVM or an oscilloscope to the MONI jack and use a phillips screw driver to adjust the azimuth and height so that the output voltage is maximum.

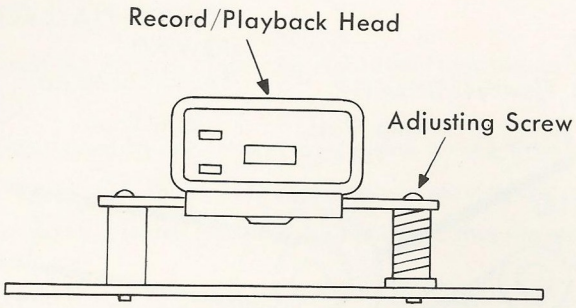

Figure 6. RECORD/PLAYBACK HEAD ADJUSTMENT

RECORD BIAS CURRENT

Set the tape recorder to the recording position, connect a VTVM across a 100 ohm resistor (R4), and adjust the semi-fixed resistor (VR3) so that the voltage drop across the resistor is 40 mv.

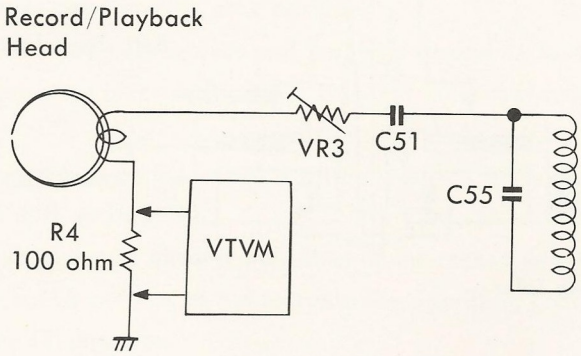

Figure 7. RECORD BIAS CURRENT

MECHANICAL OPERATION

See Figures 9, 10, and 20.

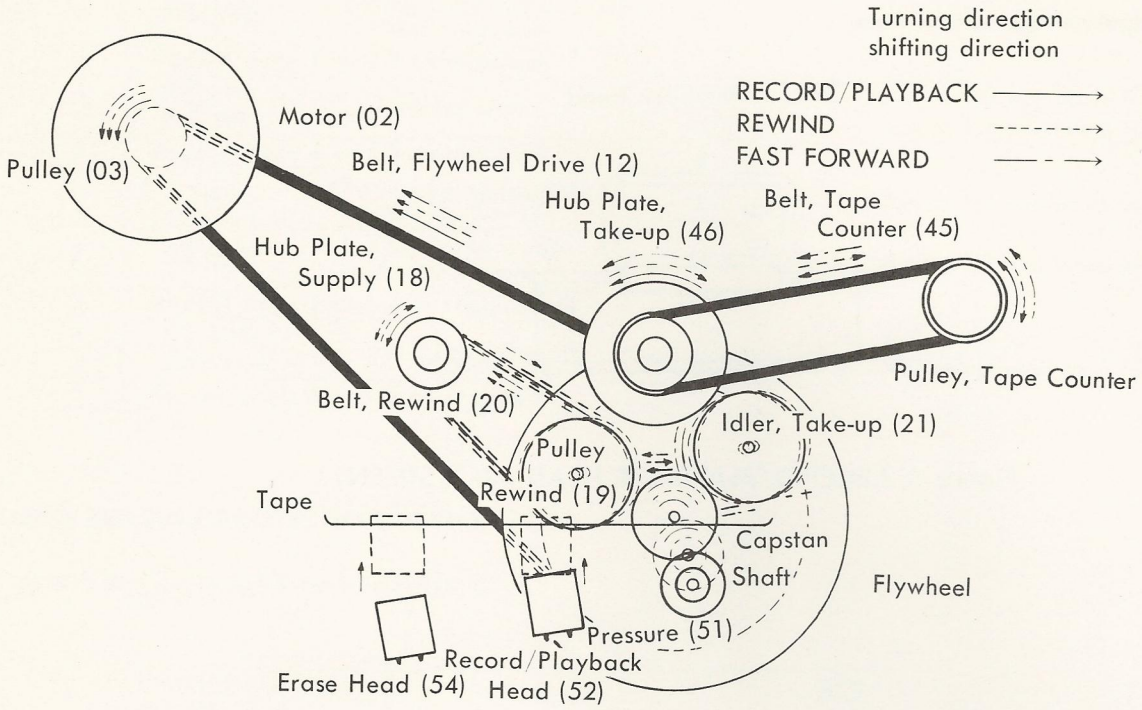

Figure 8. STOP STATE

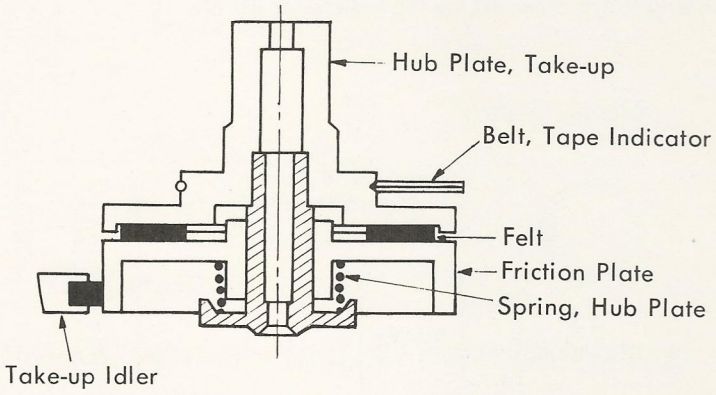

Figure 9. HUB PLATE, Tak-up

RECORD

Recording is accomplished by depressing the RECORD button and setting the operation knob to a Play. By setting the operation knob at Play, the operation cam (31) revolves and the head operating lever (40) and lever head (55) move, thus when fixed by the head lever the record/playback head (52) and erase head (54) come into contact with the tape and the pressure roller (57) presses against the capastan shaft.

Also the operation lever (38) moves due to the action of the cam and the idler lever (24) slides to the left by the force of the rewind lever spring (16) and the idler (21) makes contact with the flywheel and friction plate.
At the same time, stopper (32) moves due to the movement of the cam, switching the leaf swich ON, thus the cmplifier and motor result in an operating condition.
The tape counter drive pulley (41) is turned by the torque transmitted by the take-up hub plate ➡ tape counter belt (45). By depsessing the record button, the record slider (36) moves down moving the record lever (28), the record/playback slider switch moves by the record spring which is locked by the lever, thus the amplifier results in a recording condition.
A piece of felt is inserted between the friction plate and right reel, thus the turning motion is transmitted by means of friction.
The tape eye drive pulley (42) is turned by the torque transmitted by the take-up hub plate ➡ tape eye belt (45). By depressing the record button, the record slider (36) moves down moving the record lever (28), the record/playback slider switch moves by the record spring which is locked by the lever, thus the amplifier results in a recording condition.

PLAYBACK

Playback is carried out as previously mentioned and operates only by the operation knob.

REWIND

In order to rewind, the operating cam, by setting the operation knob at rewind and the operation lever moves due to the operation lever spring, thus the idler lever slides to the right and pulley (19) makes contact with the flywheel.
Also the leaf switch is switched on at the same time.
The revolutionary force of the motor is transmitted to the supply hub plate (48) by way of the drive belt ➡ flywheel ➡ rewind belt (20) and the tape is fed fast.

FAST FORWARD

In order to carry out FF operation, set the operation knob at the FF position.
The recorder must pass through the play condition to facilitate FF.
Therefore, in the case of FF to Stop, pass through play position.
From the playback condition the operating cam moves and the head operating lever and head lever result in the stop position by means of the head operating lever spring (39). Thus, the record/playback head, erase head and pressure roller separate from the tape.
The motor torque is transmitted to the take-up hub plate via the drive belt ➡ flywheel ➡ idler and friction plate, and the tape is fast fed forward.
The rpm of the tape counter drive pulley is greater than that of the record/playback condition. Moreover, FF from the record condition cannot be carried out due to the fact that the operating cam is in contact with the record slider and the cam cannot revolve in the FF direction.
Notes: The leader tape is connected to both ends of the tape and is fixed to the hub.

SUPPLY AND TAKE-UP HUB PLATES REMOVAL (See figure 20).

The supply and take-up hub plate can be withdrawn when hub plate stopper (47) and belt have been removed.

PARTS LOCATION DIAGRAM AND EXPLODED VIEW

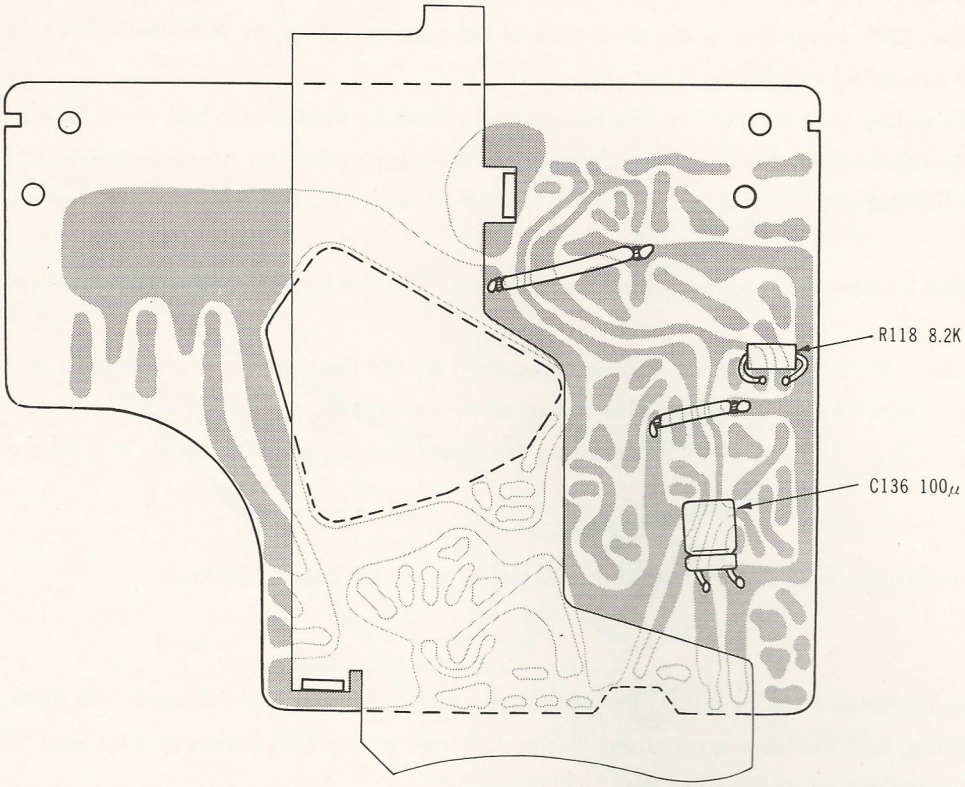

Figure 10. BOTTOM VIEW OF CHASSIS TUNER SECTION

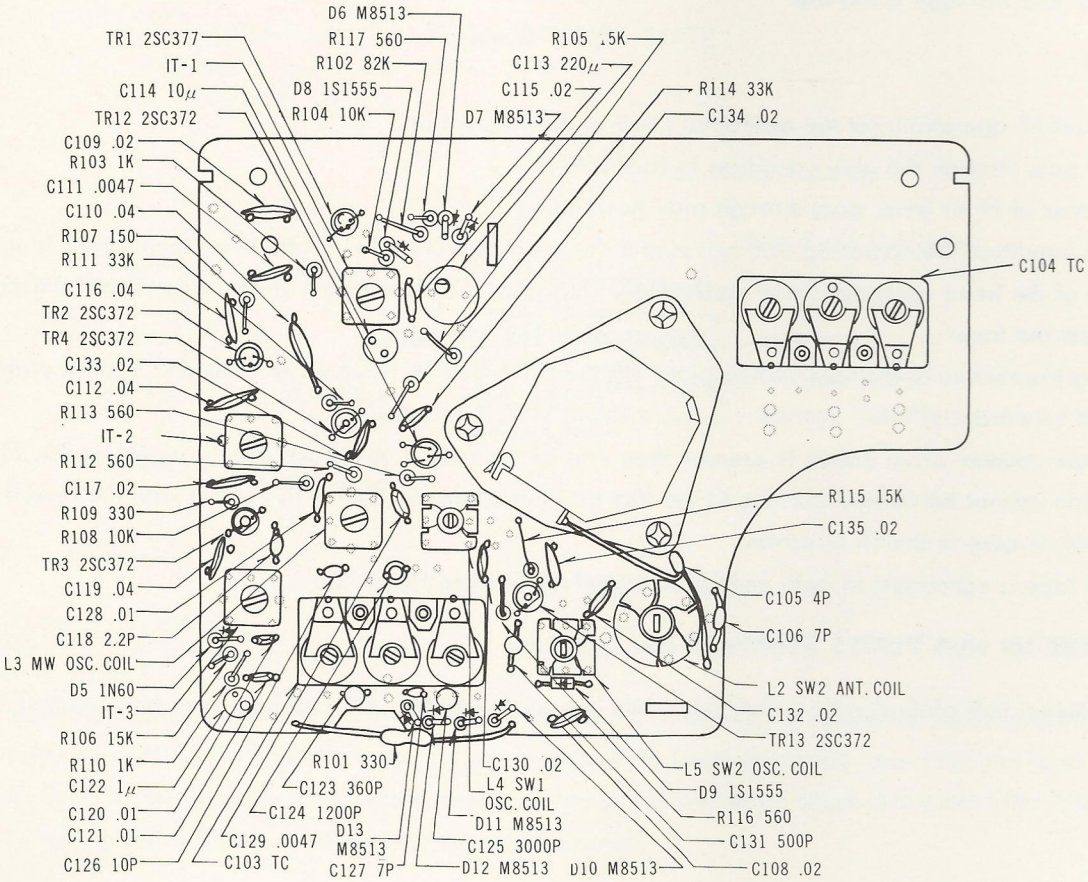

Figure 11. TOP VIEW OF CHASSIS TUNER SECTION

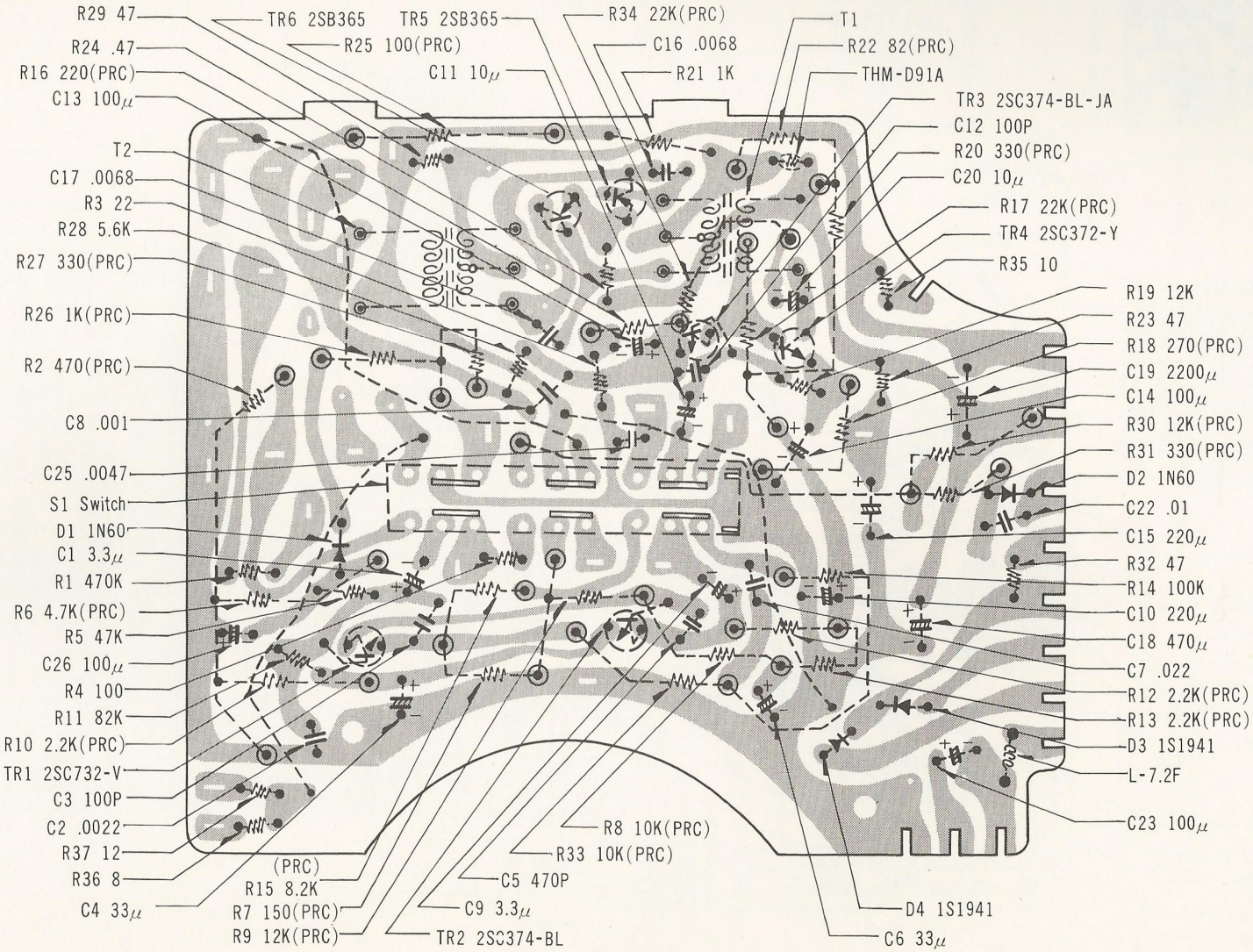

Figure 12. BOTTOM VIEW OF CHASSIS AMPLIFIER SECTION

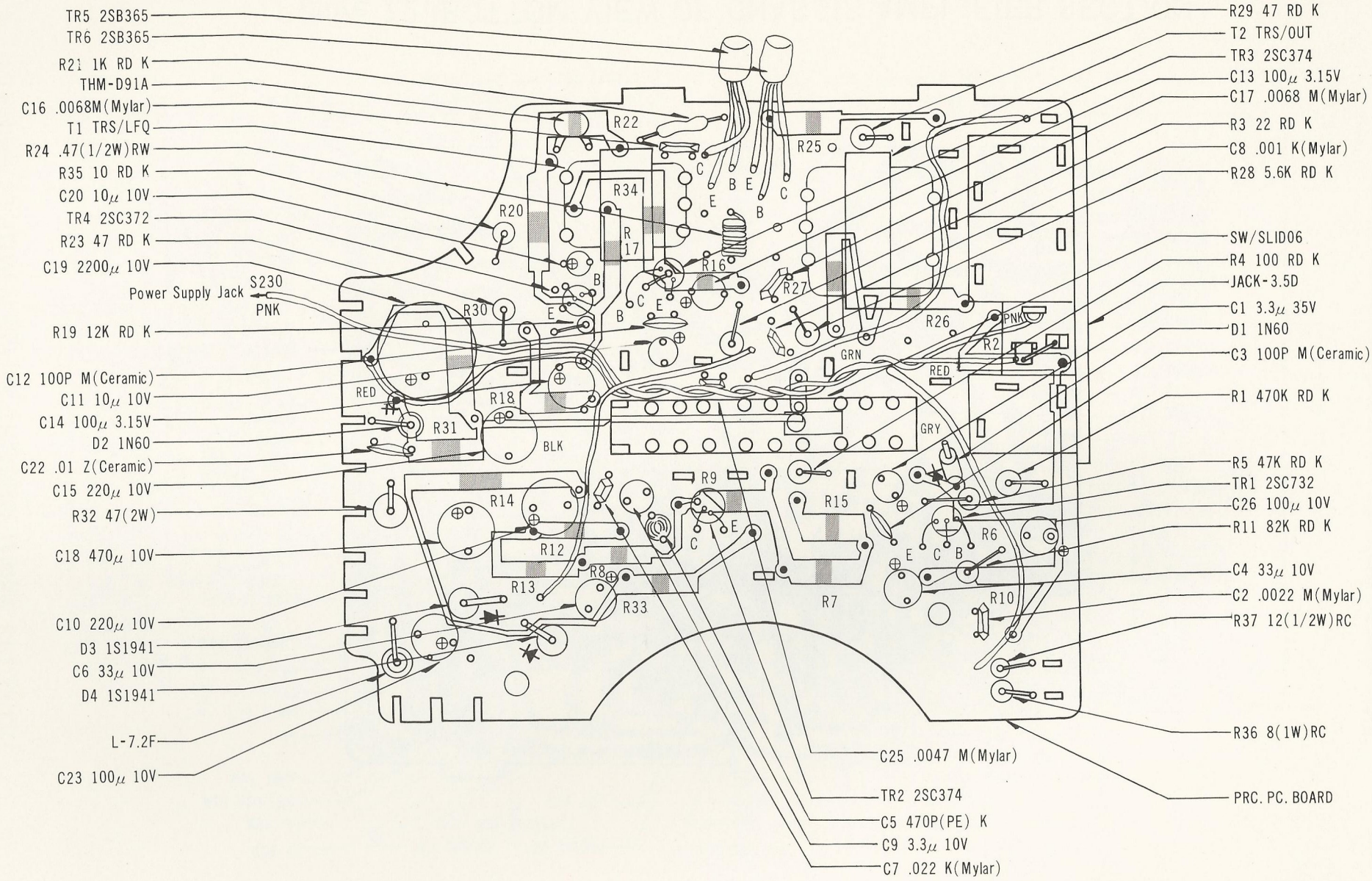

Figure 13. TOP VIEW OF CHASSIS AMPLIFIER SECTION

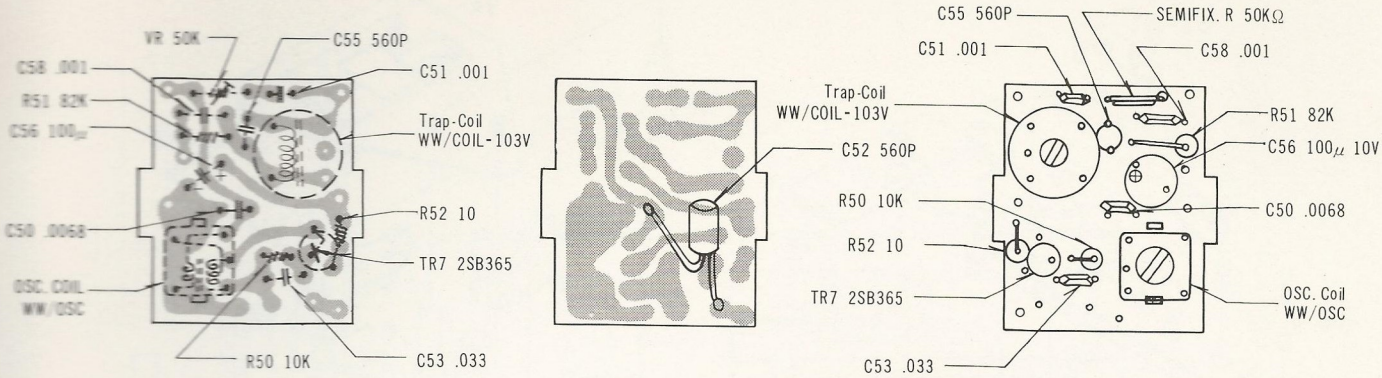

BOTTOM VIEW

BOTTOM VIEW

TOP VIEW OSCILLATOR SECTION

Figure 14. OSCILLATOR SECTION

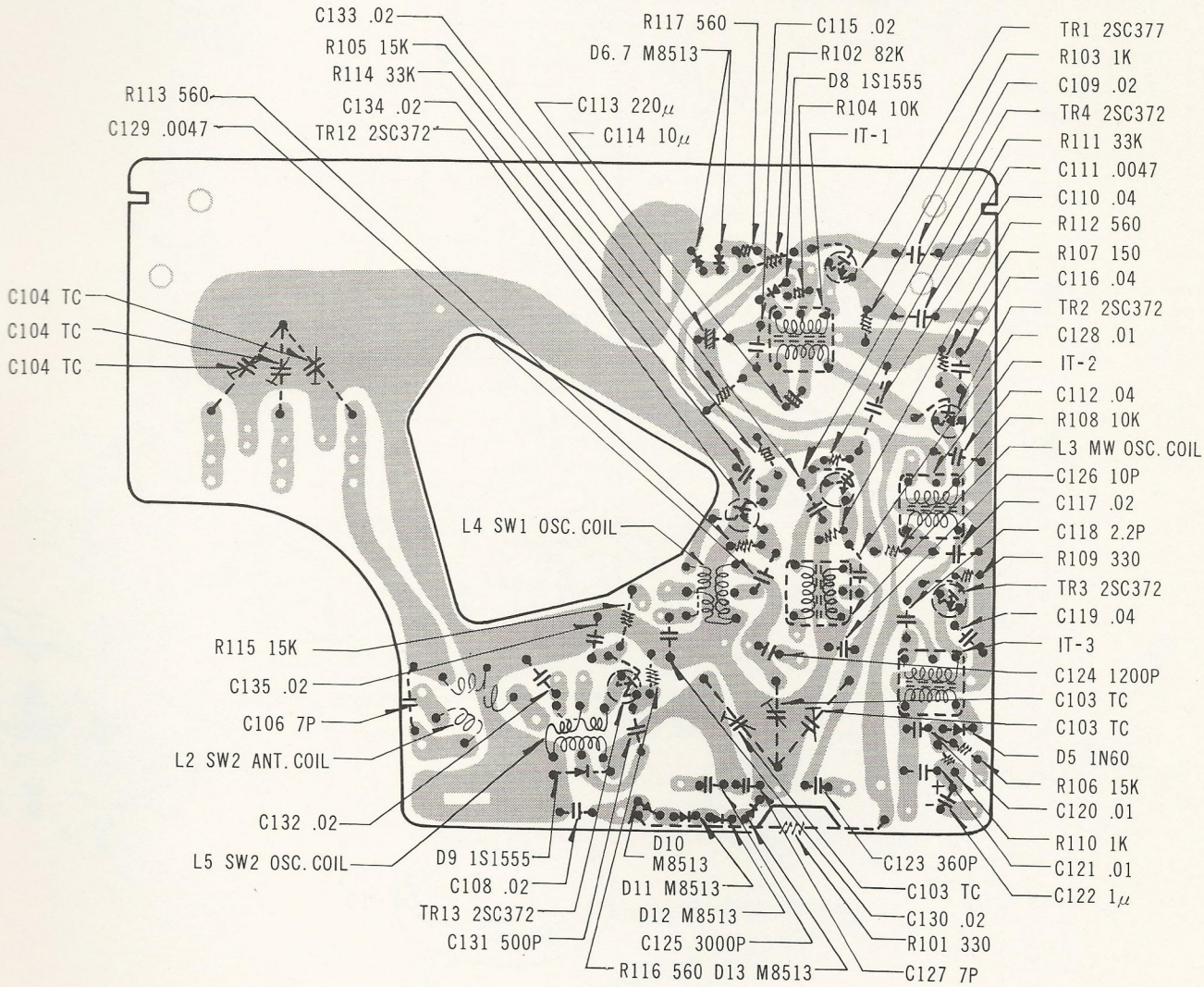

Figure 15. BOTTOM VIEW OF CHASSIS TUNER SECTION

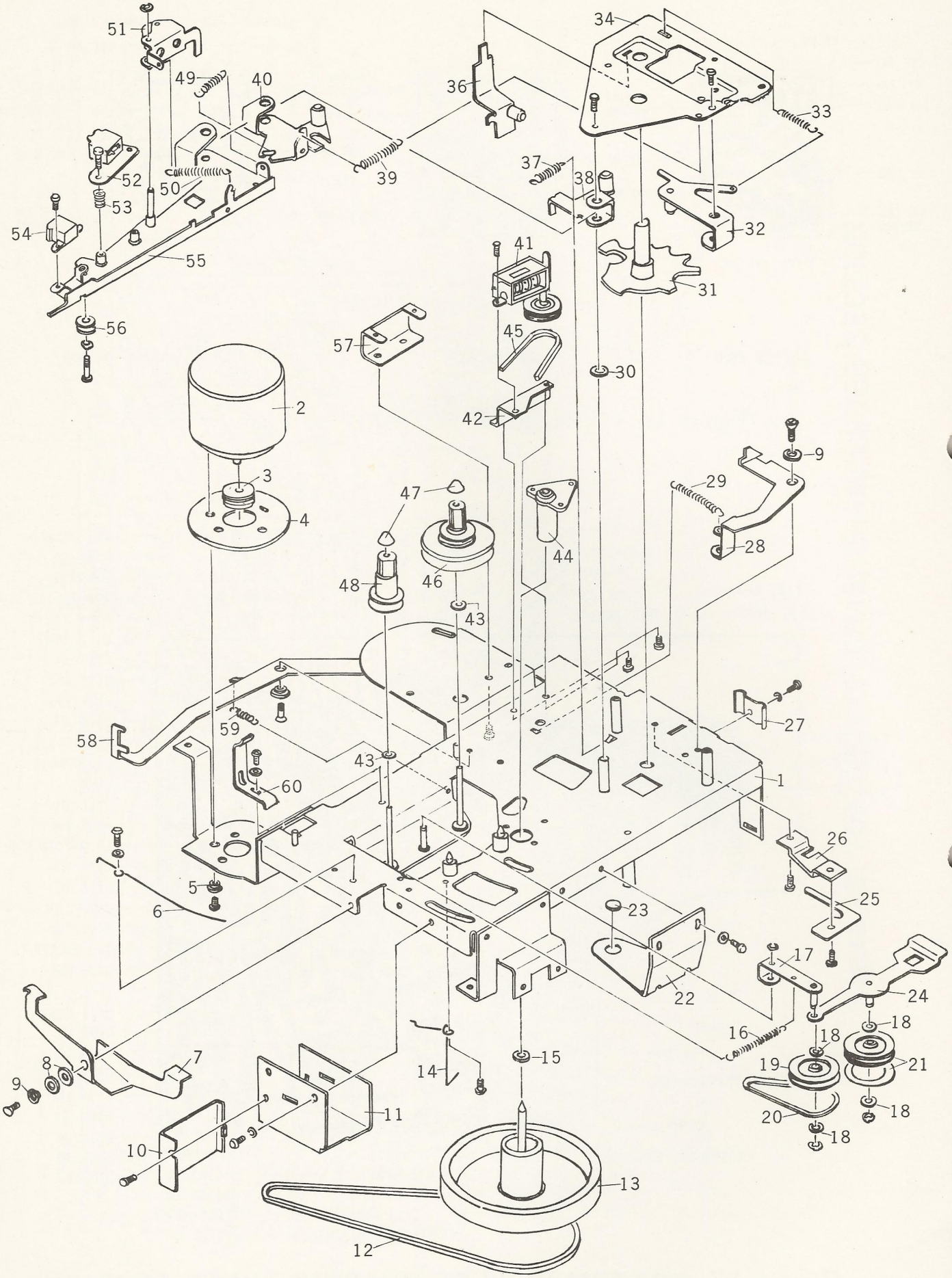

Figure 16. EXPLODED VIEW MECHANISM

PARTS LIST

SYMBOL NO.	PART NO.	DESCRIPTION
	TRANSISTORS & DIODES	
TR1	2SC377	Transistor
TR2,4,8	2SC372-Y	Transistor
TR3,12,13	2SC372	Transistor
TR5	2SC732	Transistor
TR6,7	2SC384	Transistor
TR9,10,11	2SB365	Transistor
D1,2,5	1N60	Diode
D3,4	1S1941	Diode
D6,7,10,11,12,13	M8513	Diode
D8,9	1S1555	Diode
	COILS & TRANSFORMERS	
L1	9224237331	Antenna Coil, LH-605
L2	9228212231	Antenna Coil, LH-5080
L3	9224519831	Oscillator Coil, LH-7279
L4	9228516431	Oscillator Coil, LH-7280
L5	9228516531	Oscillator Coil, LH-7281
	9221112300	Peaking Coil
	9223500600	Bias Oscillator
	9223210500	Trap Coil
IT1	9226626132	IF Transfomer, IT10391A
IT2	9226461531	IF Transformer, IT10456
IT3	9226450831	IF Transformer, IT10264D
T1	9221421700	Input Transformer
T2	9221617800	Output Transformer
T3	9221330541	Power Transformer, PT-3003B
	CAPACITORS J=±5%, K=±10%, M=±20%, P=−0+100%, Z=−20+80%	
C1,9	2244733903	Electrolytic, 3.3 mfd, 35V
C2	2237322200	Mylar, 0.0022 mfd, M, 50V
C3,12	2236310100	Ceramic, 100 PF, M, 50V
C4,6	2244333003	Electrolytic, 33 mfd, 10V
C5	2238247101	Polystyrene, 470 PF, K, 50V
C7	2237222300	Mylar, 0.022 mfd, K, 50V
C8	2237210200	Mylar, 0.001 mfd, K, 50V
C10	2244322103	Electrolytic, 220 mfd, 10V
C11,20	2244310003	Electrolytic, 10 mfd, 10V
C13,14	2244110103	Electrolytic, 100 mfd, 3.15V
C15,18	2244347113	Electrolytic, 470 mfd, 10V
C16,17	2237368200	Mylar, 0.0068 mfd, M, 50V
C19	2244322213	Electrolytic, 2200 mfd, 10V
C22,24	2234210300	Ceramic, 0.01 mfd, Z, 50V
C23,26	2244310103	Electrolytic, 100 mfd, 10V
C25	2237347200	Mylar, 0.0047 mfd, M, 50V
C40	2237210300	Mylar, 0.01 mfd, M, 50V
C41	2237268300	Mylar, 0.068 mfd, M, 50V
C42,44	2234140300	Ceramic, 0.04 mfd, P, 50V
C43	2237247300	Mylar, 0.047 mfd, K, 50V
C103,104	2230902002	Trimmer
C105	2236140904	Ceramic, 4 PF, J, 50V
C106,127	2236170904	Ceramic, 7 PF, ±0.5PF, 50V
C107	2236130904	Ceramic, 3 PF, ±0.5PF, 50V
C108,109,115, 117,130,132, 133,134,135	2234120300	Ceramic, 0.02 mfd, P, 50V
C110,112,116,119	2234140300	Creamic, 0.04 mfd, P, 50V
C111,129	2237247200	Mylar, 0.0047 mfd, K, 50V
C113	2244322103	Electrolytic, 220 mfd, 10V
C114	2244510003	Electrolytic, 10 mfd, 16V
C118	2236120904	Ceramic, 2 PF, ±0.5PF, 50V
C120,121,128	2237210300	Mylar, 0.01 mfd, M, 50V

SYMBOL NO.	PART NO.	DESCRIPTION
C122	2244810903	Electrolytic, 1 mfd, 50V
C123	2238136101	Polystyrene, 360 PF, J, 50V
C124	2238212201	Polystyrene, 0.0012 mfd, K, 50V
C125	2238230201	Polystyene, 0.003 mfd, K, 50V
C126	2236110004	Ceramic, 10 PF, J, 50V
C131	2238150101	Polystyrene, 500PF, J, 50V
C136	2244310103	Electrolytic, 100 mfd, 10V
	RESISTORS: All resistors are 1/8W, 10%, Carbon Film unless otherwise noted.	
R1	2255447400	470 Kohm
R3	2255422000	22 ohm
R4	2255410100	100 ohm
R5	2255468400	68 Kohm
R11	2255482300	82 Kohm
R19	2255412300	12 Kohm
R21	2255410200	1 Kohm
R23,29	2255447000	47 ohm
R24	2268547800	0.47 ohm, Fixed Wound, 1/2W
R28	2255456200	5.6 Kohm
R32	2257447000	47 ohm, Metal Film, 2W
R35	2255410000	10 ohm
R36	2256580900	8 ohm, Composition, 1W
R37	2256312000	12 ohm, Composition, 1/2W
R40	2254422200	2.2 Kohm
R101	2254433100	330 ohm
R102	2255482300	82 Kohm
R103,110,112	2255410200	1 Kohm
R104,108	2255410300	10 Kohm
R105,106,115	2255415300	15 Kohm
R107	2255415100	150 ohm
R109	2255433100	330 ohm
R111	2256156300	56 Kohm, Composition, 1/4W
R113,116,117	2255456100	560 ohm
R114	2255433300	33 Kohm
R118	2256182200	8.2 Kohm
VR1	2263101701	Variable, 5Kohm
VR2	2263101801	Variable, 10 Kohm, with Switch
TH	2269100200	Thermistor, D91A
	ELECTRICAL PARTS	
	2215135700	Speaker, SP-92D1
	2212421101	Telescopic Antenna
	2210404200	Level Meter
	2214564701	Switch, Leaf
	2214556800	Switch, Slide, Speaker Monitor
	2214548900	Switch, Slide
	2214504600	Switch, Slide, Beat
	2216316601	Jack, 3.5 ϕ
	2214551101	Switch, Slide
	2213200300	Oscillator Block Assembly
	2211604000	Socket, Volt Change
	2214592601	Switch, Rotary
	MECHANICAL PARTS	
	2276101114	Spring
	2275407300	Support, VC
	2275100500	Cushion Rubber
	2274906800	Drum Assembly
	2274306500	Tuning Shaft
	2273617400	Bracket
	2271407100	Bushing Assembly
	2274506700	Dial Cord Assembly

PARTS LIST

SYMBOL NO.	PART NO.	DESCRIPTION
		CABINET PARTS
	2582628000	Knob, Function
	2582627800	Knob, Tone, Volum
	2581120200	Cabinet Front Assembly
	2582127500	Cabinet Front
	2582430701	Name Plate
	2583214200	Dial Cover
	2582431100	Mark
	2571233600	Retainer Assembly, Top Cover Right
	2571033700	Retainer Assembly, Top Cover Left
	2582628200	Cassette Up Button
	2577134901	Spring, Cassette Up Button
	2584618800	Torsion Retainer
	2577134800	Spring, Torsion
	2581230900	Top Cover Assembly
	2582418800	Reflector
	2585818000	Cushion Rubber, Cassette Up
	2585818900	Cushion, E
	2585819000	Cushion, F
	2585819100	Cushion, G
	2581120301	Back Cover Assembly
	2582221200	Back Cover
	2582221300	Battery Cover
	2582221500	Cord Cover, Left
	2582221400	Cord Cover, Right
	2585817701	Cushion
	2276401800	Spring, Battery
	2273308900	Terminal, A
	2582219500	Case, Microphone
	2585817901	Cushion, B
	2585818001	Cushion, C
	2583312900	Ribbon
	2585413300	Shield Foil
	2581620900	Knob, Operation
	2587313300	Knob, Power 9P Socket
	2233458600	Knob, Tuning
	2282412900	Knob, Fine Tun
	2585818300	Cushion, Indicator
	2582430801	Label
	2582425400	Label, B
	2273308900	Contact, Plus
	2282803001	Handle Assembly
	2276203000	Clamp, Speaker
	2276300400	Knob Spring
		ACCESSORIES
	2299001800	Head Cleaner
	2295401400	Owner's Manual
	2215402800	Microphone, 17DL1
	2210522100	Audition Tape
	2217614200	AC Cord (250V 3A) VI
	2217614100	AC Cord (250V 3A) VC
	2217614300	AC Cord (250V 3A) VF
		PACKAGES
	2292413701	Package Box
	2299912400	Packing Materials
		MECHANISM
01	2571125301	Chassis

SYMBOL NO.	PART NO.	DESCRIPTION
02,03	2571036400	Motor and Pulley
03	2575131500	Pulley, Motor
04	2576115600	Cushion, Motor Mtg.
05	2585310700	Shield Washer, Motor Mtg.
06	2577221800	Spring, Cassette Up Lever
07	2574237402	Lever, Cassette Up
08	2576433300	Washer, Polyethylene
09	2572427501	Spacer
10	2274803502	Bracket, Shield Case
11	2274803401	Case, Shield
12	2575518200	Belt, Flywheel Drive
13	2571715404	Flywheel and Capstan Shaft
14	2577512800	Guide, Belt
15	2576425100	Washer, Nylon, 2mm, Thickness 0.6mm
16	2571029401	Spring, Rewind Pulley Lever
17	2571033100	Lever, Rewind Pulley
18	2576419400	Washer, Nylon
19	2575126801	Pulley, Rewind
20	2575517103	Belt, Rewind
21	2571322000	Idler, Take-up
22	2573420702	Retainer, Flywheel
23	2576430100	Sheet, Nylon, Capstan Shaft
24	2571026800	Slider, Take-up Idler
25	2577418800	Spring, Record Slider
26	2573422300	Guide, Erase Protection Lever
27	2585512300	Retainer, Transistor
28	2571811900	Lever, Record
29	2571028302	Spring, Record Lever
30	2576430200	Washer, Nylon, Head Lever
31	2574117902	Cam, Operation
32	2571026500	Arm, Stopper, Operation Cam
33	2571028502	Spring, Cam Stopper Arm
34	2573134701	Plate, Operation Cam
35		
36	2571812100	Slider, Record
37	2571029301	Spring, Idler Slider Actuating Lever
38	2571026400	Lever, Idler Slider Actuating
39	2571028403	Spring, Head Plate operator
40	2571026300	Operator, Head Lever
41	2587312200	Tape Counter
42	2573136502	Bracket, Tape Counter
43		
44	2571811501	Bearing, Capstan Shaft
45	2575518500	Belt, Tape Counter
46	2571218603	Hub Plate, Take-up
47	2575418600	Stopper, Hub Plate
48	2571218702	Hub Plate, Supply
49	2577130102	Spring, Hiad Lever
50	2571028202	Spring, Pressure Roller
51	2571715602	Pressure Roller
52	2221713400	Record/Playback Head
53	2577219700	Spring, Record/Playback Head
54	2221811200	Erase Head
55	2571718000	Lever, Head
56	2572316302	Guide, Head Lever
57	2573136700	Bracket, Slide Switch
58	2571812000	Lever, Erase Protection
59	2577130403	Spring, Erse Protection
60	2577419400	Brace, Cassette

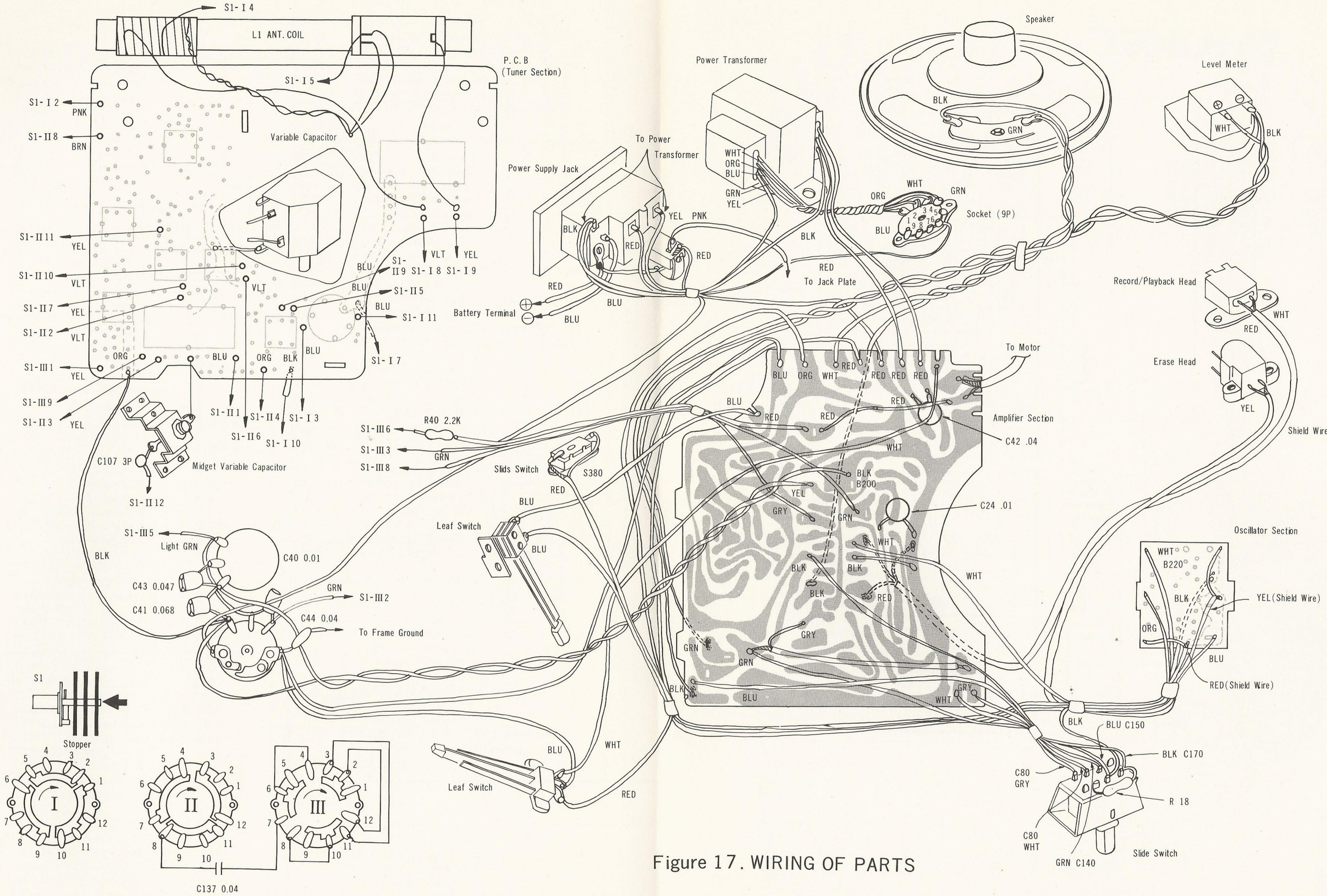

Figure 17. WIRING OF PARTS

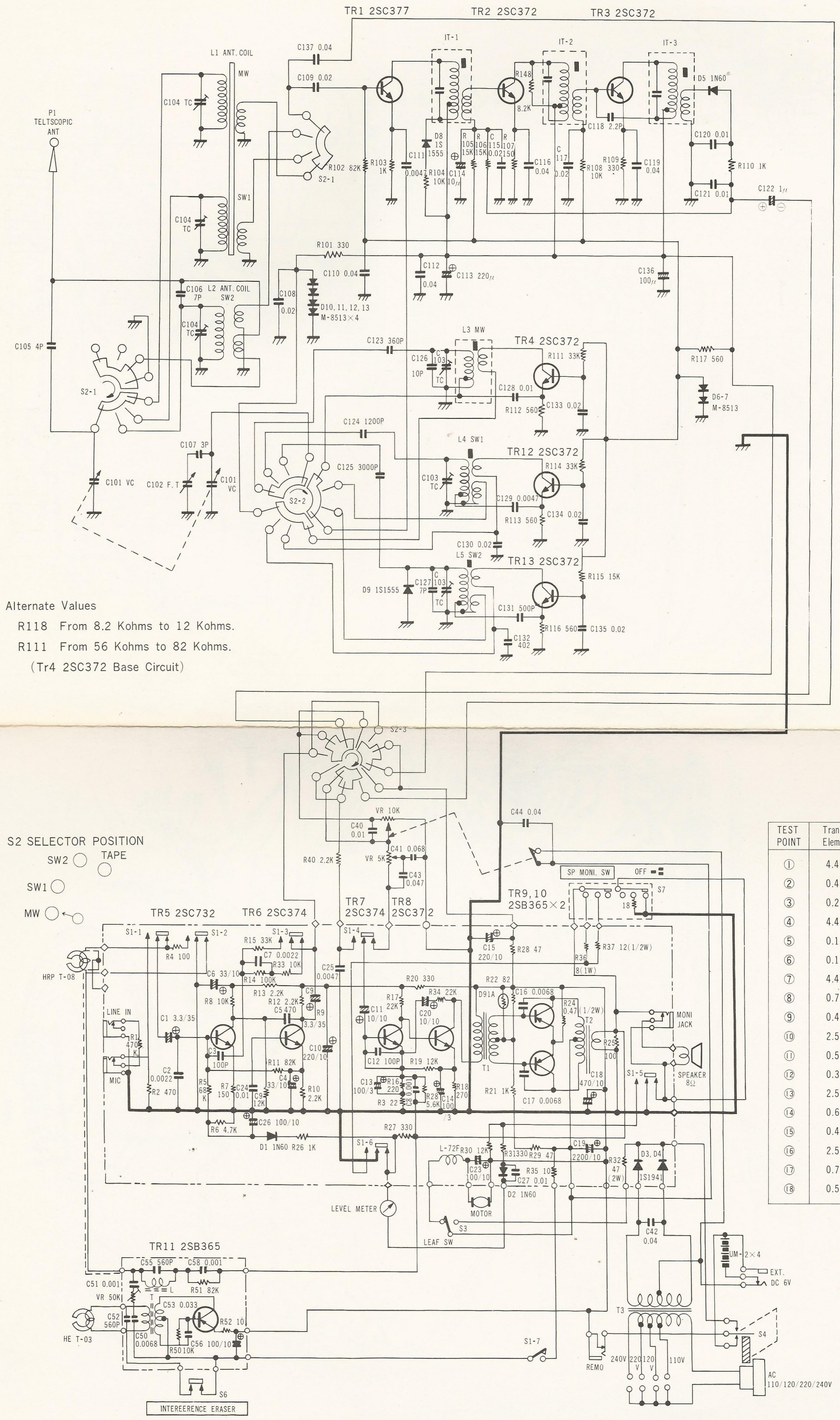

Alternate Values

R118 From 8.2 Kohms to 12 Kohms.

R111 From 56 Kohms to 82 Kohms.

(Tr4 2SC372 Base Circuit)

TEST POINT	Transistor Element Voltage
①	4.4 ~ 4.6 V
②	0.4 ~ 0.6 V
③	0.25 ~ 0.45V
④	4.4 ~ 4.6 V
⑤	0.15 ~ 0.4 V
⑥	0.1 ~ 0.15V
⑦	4.4 ~ 4.6 V
⑧	0.7 ~ 1.1 V
⑨	0.45 ~ 0.65V
⑩	2.5 ~ 2.7 V
⑪	0.55 ~ 0.6 V
⑫	0.35 ~ 0.45V
⑬	2.5 ~ 2.7 V
⑭	0.6 ~ 0.85V
⑮	0.4 ~ 0.68V
⑯	2.5 ~ 2.7 V
⑰	0.7 ~ 1.0 V
⑱	0.5 ~ 0.65V