## FUNCTIONAL PARTS

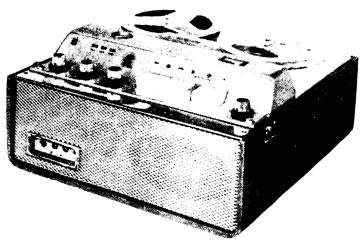

# MODEL RS-751

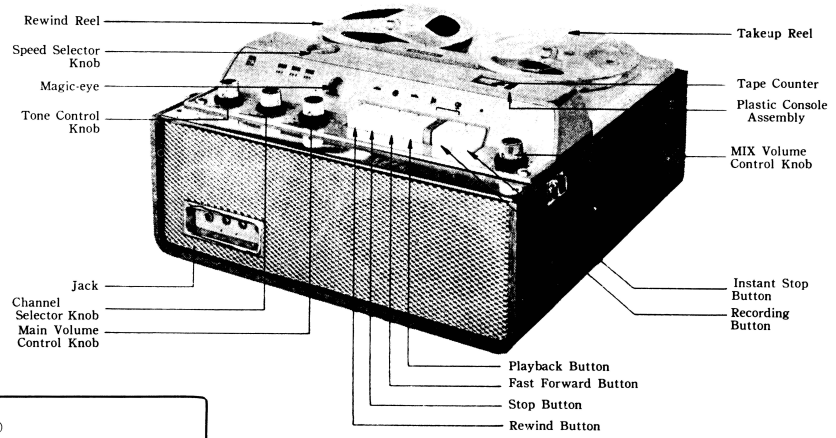


Fig. 1

### SPECIFICATIONS

| | |
|---|---|
| **Power source:** | AC main 100-250 V (50c/s, 60c/s) |
| **Power consumption:** | abt. 50 W |
| **Rated output:** | 2 W (3W maximum) |
| **Tube complement:** | 12AX7 (1) 6BM8/P (1) 12AT7 (1) 6267 (1) 6DA5 (1) |
| **Diode:** | 0A-70 (1) |
| **Selenium rectifier:** | KC 0.6e 11/18 |
| **Recording system:** | AC bias at 60KC |
| **Erasing system:** | AC erasure |
| **Track system:** | 4 track stereo system |
| **Tape speeds:** | 3 speeds 7.1/2, 3.3/4 and 1.7/8 i.p.s. |
| **Playing time:** | 1 hour × 2 at 7.1/2 ips with 7″ 1200ft. tape |
| (4 track monaural) | 2 hours × 2 at 3.3/4 ips with 7″ 1200ft. tape |
| | 4 hours × 2 at 1.7/8 ips with 7″ 1200ft. tape |
| **Frequency response:** | 50-12000 c/s at 7.1/2 ips. 50-7000 c/s at 3.3/ ips. |
| | 100-4000 c/s at 1.7/8 ips. |
| **Operation system:** | Push button operation |
| **Recording level indicator:** | Magic-eye |
| **Inputs:** | 1-microphone 20 KΩ unbalanced |
| | 1-radio 1 MΩ unbalanced |
| **Outputs:** | 1-external speaker 8Ω 1-monitoring 100kΩ |
| | 1-stereo 20 KΩ, 10 KΩ |
| **Fast forward & Rewind time:** | Within 3 minutes with 7″ 1200 ft tape |
| **Tape conuter:** | Digital |
| **Built-in speaker:** | 4″ × 7″ permanent dynamic 2.1/2″ permanent dynamic |
| **Dimensions and weight:** | 15.1/2″ × 15.1/2″ · 7.3/4. abt 22 Ibs. |

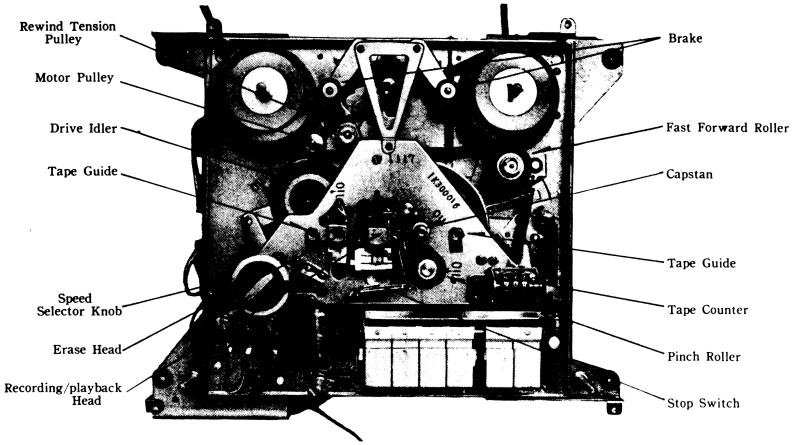


Fig. 2

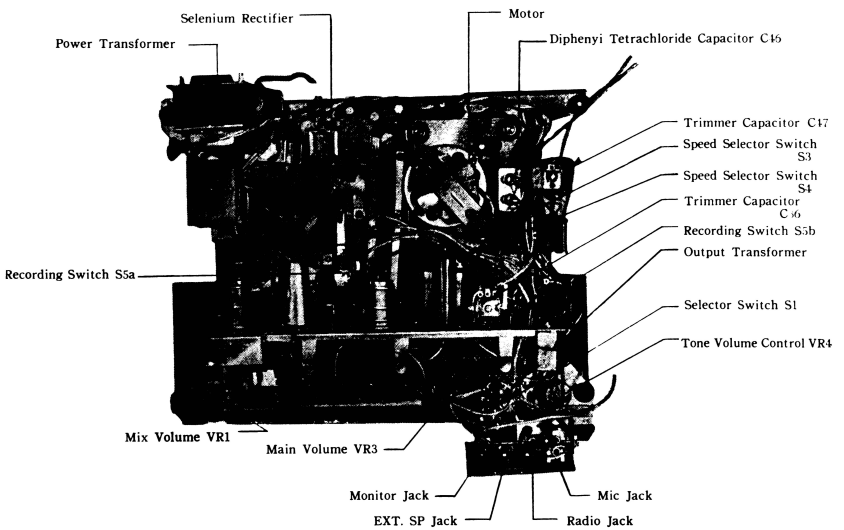


Fig. 3

### FAST FORWARD (F. F.)

Press the F.F. button, and the F. F. roller will be pressed down, and the rotation of the reel pully will be transmitted to the takeup reel holder. The F. F. roller consists of wo disks pressed each other by a spring, with a felt ring in between, so that, when the mechanism is over-loaded, the two disks slip each other to get automatic speed control. In this case, the supply reel holder is so set as to give the back tension to the tape.

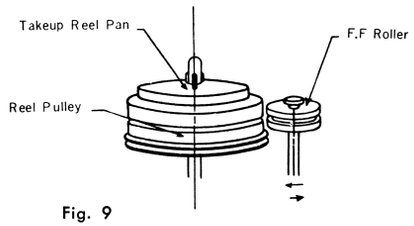


Fig. 9

### REWIND

Press the Rewind button, and the rubber belt will be pressed against the supply reel holder by the rewind tension pulley as shown in Fig. 10, and the rotation of the motor will be directly transmitted to the reel holder, while the takeup reel holder will also rotate due to the friction of the felt disk at the bottom of the reel spindle.

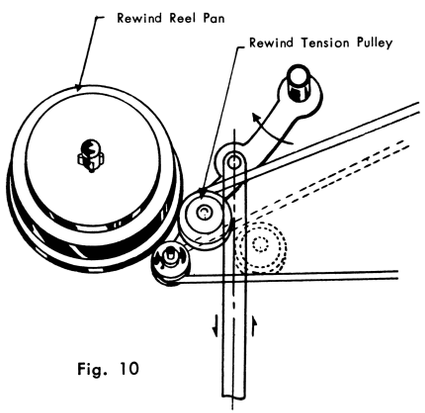


Fig. 10

### INSTANT STOP

Press the Instant Stop button, and the pinch roller will be freed from the capstan. the supply reel holder will be braked and the tape will stop instantly. Release the button, and the pinch roller will be pressed against the capstan, and the brake released, and the tape will start rotating.

### STOP

Press the Stop button, and the brake arm will open, both reel holders will be braked and the tape will stop.

## 4. DISASSEMBLING INSTRUCTIONS

### Panel (See Fig. 11)

1. loosen the set-screws (1) of the knobs with a screw-driver.
2. Pull out the head cover (2).
3. Remove the screws (3) and pull out the mount.
4. Remove the panel-fastening nuts (4) (under the head cover)
5. Remove the screws (4) off the panel.
6. Now is the panel free from the body.

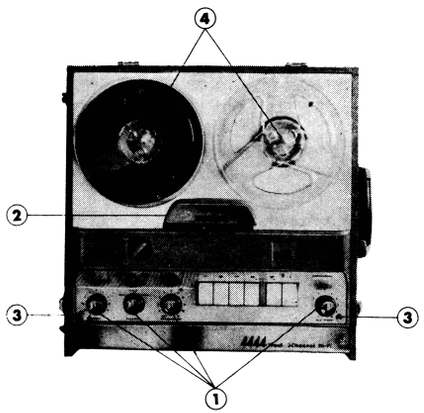


Fig. 11

### Mechanism (See Fig. 12)

1. Remove the screws at 4 corners with a 4m/m nut-box. (6)
2. Remove the washers (7).
3. Push the Power cord into the cabinet through the opening in the spare parts box.
4. Remove the body of mechanism gently upward.

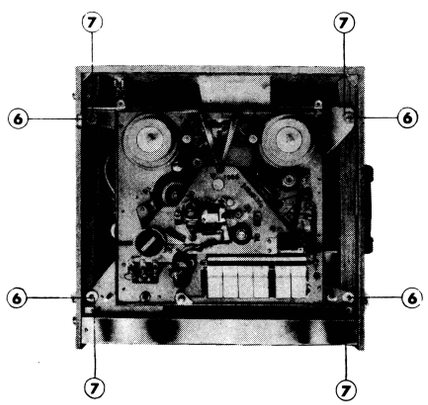


Fig. 12

### Motor

1. Take the rubber belt off the motor-pulley.
2. Loosen the set-screw and remove the motor-pulley.
3. Unsolder lead wires of the motor.
4. Remove the nuts of the motor holder plate with a 3 m/m nut-box.
5. Remove the motor holder plate together from the bottom board.
6. Remove the 4 motor-fixing screws and will come off the fixing screws of the oil cup, and the motor holder plate.

### Tape counter

1. Loosen the set-screw at the top of the counter-spring joint.
2. Remove the 2 screws of the counter holder, and the tape counter and holder will come off.
3. Remove the counter-fixing screws, and the tape counter will come off.

### Counter Belt

Remove the 2 fixing screws of the takeup reel bearing angle, and take the belt off the pulley.

### Supply reel holder

Remove the clamp (Washer C) of the supply reel holder from the back of the mechanism, and pull the supply reel holder upwards.

### Takeup reel holder

loosen the set-screw on the reel holder counter (A) and pull the reel holder upwards.

## 5. ADJUSTMENT

### a) Pinch Roller:

Normal pressure of it should be 1.0 kg—1.5 kg.
In playback position, pull the pinch roller away from the center of the capstan and check to see where the pinch roller stops rotating and measure the pressure at that point. Adjust the pressure by the pinch roller spring.

### b) Idler:

Normal pressure should be 200—300g.
Set the tape speed at $1\frac{1}{8}$ ips. Pull the idler at right angles from the central line of the motor pulley and flywheel, and check to see where the idler stops rotating. Adjust the pressure by the idler spring.

### c) Winding tension for playback

Normal tension for a fully loaded No. 7 reel should be 20—40 g. Adjust the tension by the clutch-adjusting screws.

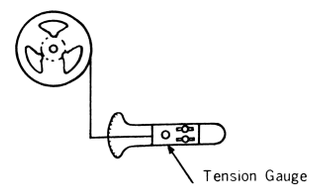


Fig. 13

### d) Winding tension for F. F.

Normal tension for a fully loaded No. 7 reel should be over 100 g. Adjust the tension by the F. F. lever spring, and by cleaning or changing the F. F. roller.

### e) Rewinding tension

Normal tension for a fully loaded No. 7 reel should be over 100 g. Adjust the tension by the rewind rod spring.

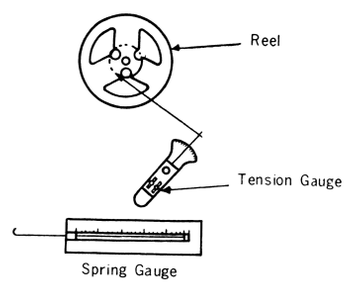


Fig. 14

## REPLACEMENT PARTS

| | | | |
|---|---|---|---|
| C 1 | Titanium Capacitor | 250 PF | |
| C 2 | Titanium Capacitor | 250 PF | |
| C 3 | Titanium Capacitor | 500 PF | |
| C 4 | Paper Tubular Capacitor | 0.1 μF | |
| C 5 | Paper Tubular Capacitor | 0.02 μF | |
| C 6 | Electrolytic Tubular Capacitor | 10 μF | WV 6V |
| C 7 | Paper Tubular Capacitor | 0.02 μF | |
| C 8 | Titanium Capacitor | 500 PF | |
| C 9 | Electrolytic Tubular Capacitor | 10 μF | WV 6V |
| C10 | Paper Tubular Capacitor | 0.05 μF | |
| C11 | Titanium Capacitor | 400 PF | |
| C12 | Paper Tubular Capacitor | 0.1 μF | |
| C13 | Paper Tubular Capacitor | 0.1 μF | |
| C14 | Papar Tubular Capacitor | 0.02 μF | |
| C15 | Paper Tubular Capacitor | 0.02 μF | |
| C16 | Titanium Capacitor | 400 PF | |
| C17 | Electrolytic Tubular Capacitor | 10 μF | WV 6V |
| C18 | Paper Tubular Capacitor | 0.1 μF | |
| C19 | Titanium Capacitor | 500 PF | |
| C20 | Titanium Capacitor | 400 PF | |
| C21 | Electrolytic Tubular Capacitor | 3 μF | WV 10V |
| C22 | Paper Tubular Capacitor | 0.01 μF | |
| C23 | Paper Tubular Capacitor | 0.01 μF | |
| C24 | Paper Tubular Capacitor | 0.05 μF | |
| C25 | Titanium Capacitor | 100 PF | |
| C26 | Paper Tubular Capacitor | 0.005 μF | |
| C27 | Electrolytic Tubular Capacitor | 25 μF | WV 25V |
| C28 | Paper Tubular Capacitor | 0.01 μF | |
| C29 | Paper Tubular Capacitor | 0.002 μF | |
| C30 | Paper Tubular Capacitor | 0.002 μF | |
| C31 | Mica Capacitor | 0.0015 μF | |
| C32 | Paper Tubular Capacitor | 0.03 μF | |
| C33 | Paper Tubular Capacitor | 0.001 μF | |
| C34 | Paper Tubular Capacitor | 0.05 μF | |
| C35 | Paper Tubular Capacitor | 0.01 μF | |
| C36 | Trimmer Capacitor | BTC-130 | |
| C37 | Paper Tubular Capacitor | 0.002 μF | |
| C38 | Electrolytic Capacitor | 10 μF | WV 350V |
| C39 | Electrolytic Capacitor | 30 μF | WV 350V |
| C40 | Electrolytic Capacitor | 30 μF | WV 350V |
| C41 | Electrolytic Capacitor | 30 μF | WV 350V |
| C42 | Paper Tubular Capacitor | 0.003 μF | |
| C43 | Paper Tubular Capacitor | 0.02 μF | |
| C44 | Titanium Capacitor | 350 PF | |
| C45 | Electrolytic Capacitor | 6 μF | WV 10V |
| C46 | Electrolytic Capacitor | 2 μF | WV 250V |
| G 1 | Recorder Cabinet A | | |
| G 2 | Metal Frame | | |
| G 3 | Hinge | | |
| G 4 | Lock Hinge | | |
| G 5 | Handle | | |
| G 6 | Storage Pocket Lid | | |
| G 7 | Rubber Foot (Large) | | |
| G 8 | Rubber Foot (Small) | | |
| G 9 | Recorder Cabinet B | | |
| G10 | Plastic Console Assembly | | |
| G11 | Head Cover | | |
| G12 | Main Volume Control Knob | | |
| G13 | Tone Control Knob | | |
| G14 | Mix Volume Control Knob | | |
| G15 | CH Selector Knob | | |
| G16 | Screw, Knob Holding | | |
| G17 | Screw, Panel Holding | | |
| G18 | Panel | | |
| M 1 | Tape Guide Screw | | |
| M 2 | Tape Guide | | |
| M 3 | Flywheel | | |
| M 4 | Flywheel Bearing | | |
| M 5 | Flywheel Bearing Retainer | | |
| M 6 | Drive Idler | | |
| M 7 | Drive Idler Shaft | | |
| M 8 | Drive Idler Arm | | |
| M 9 | Drive Idler Lever-B | | |
| M10 | Drive Idler Arm Spacer | | |
| M11 | Drive Idler Spring | | |
| M12 | Drive Idler Lever-A Assembly | | |
| M13 | Drive Idler Spring | | |
| M14 | Drive Idler Lever-B Spring | | |
| M15 | Pinch Roller Holder Assembly | | |
| M16 | Pinch Roller Lever-A | | |
| M17 | Pinch Roller Spring | | |
| M18 | Pinch Roller | | |
| M19 | Pinch Roller Felt | | |
| M20 | Pinch Roller Holding Screw | | |
| M21 | Rewind Reel Pan Felt Washer | | |
| M22 | Rewind Reel Pan Spacer Holder-C | | |
| M23 | Reel Pan Spacer | | |
| M24 | Rewind Reel Pan Bracket | | |
| M25 | Reel Pan Spring Oil Cap | | |
| M26 | Takeup Reel Pan Spindle Washer | | |
| M27 | Clutch Plate | | |
| M28 | Takeup Reel Pan Spacer Holder-B | | |
| M29 | Takeup Reel Pan Spring | | |
| M30 | Counter Pulley-A | | |
| M31 | Takeup Reel Spindle Bearing | | |
| M32 | Takeup Reel Spindle Bearing Bracket | | |
| M33 | Counter Pulley-B | | |
| M34 | Counter Belt | | |
| M35 | Counter Shaft Bearing | | |
| M36 | Takeup Rod | | |
| M37 | Brake Holding Bracket | | |
| M38 | Rewind Brake Roller Assembly | | |
| M39 | Takeup Brake Roller Assembly | | |
| M40 | Brake Arm Shaft | | |
| M41 | Brake Spring | | |
| M42 | Brake Rod | | |
| M43 | Takeup Brake Arm | | |
| M44 | Rewind Tonsion Pulley Arm | | |
| M45 | Rewind Tension Pulley Arm Shaft | | |
| M46 | Rewind Tension Pulley | | |
| M47 | Rewind Rod | | |
| M48 | Rewind Rod Spring-A | | |
| M49 | Rewind Rod Spring-B | | |
| M50 | Brake Rod Spring | | |
| M51 | Fast Forward Idler Assembly | | |
| M52 | Fast Forward Lever Assembly | | |
| M53 | Fast Forward Lever Shaft | | |
| M54 | Fast Forward Spring | | |
| M55 | Pinch Roller Spring | | |
| M56 | Fast Forward Rod | | |
| M57 | Instant Stop Lever-A Assembly | | |
| M58 | Instant Stop Lever-B | | |
| M59 | Instant Stop Rod Spring | | |
| M60 | Instant Stop Lever-C Spring | | |
| M61 | Counter | | |
| M62 | Counter Holding Bracket | | |
| M63 | Counter Spring Joint | | |
| M64 | Counter Spring Joint Screw | | |
| M65 | Motor Pulley | | |
| M66 | Rubber Belt | | |
| M67 | Push Button Lever-A Spring | | |
| M68 | Reel Pan Spring Oil Cap | | |
| M69 | Base Plate Rubber Cushion | | |
| M70 | Base Plate Rubber Cushion Spacer | | |
| M71 | Base Plate Rubber Cushion Washer | | |
| M72 | Head Adjustment Spring | | |
| M73 | Flywheel Thrust Steel Ball | | |
| M74 | R/P Head Mounting Plate | | |
| M75 | R/P Head Mounting Plate Spacer | | |
| M76 | Tape Lifter Assembly | | |
| M77 | Tape Guide Plate | | |
| M78 | Speed Selector Knob | | |
| M79 | Rewind Reel Pan | | |
| M80 | Takeup Reel Pan | | |
| M81 | Takeup Reel Pan Pulley | | |
| M82 | Motor Mounting Board Rubber Cushion | | |
| M83 | Washer for above | | |
| M84 | Mounting Screw for above | | |
| M85 | Motor Mounting Board | | |
| M86 | Rewind Button Assembly | | |
| M87 | Stop Button Assembly | | |
| M88 | Fast Forward Button Assembly | | |
| M89 | Record/Playback/Instant Stop Button Assembly | | |
| M90 | Push Button Release Lever | | |
| M91 | Limitter | | |
| M92 | Magic-eye Holding Bracket | | |
| M93 | Erase Head Pad Spring | | |
| M94 | Motor | 2HC-20B | |
| M95 | Fast Forward Rod Spring | | |
| M96 | Capstan Screw | | |
| M97 | Capstan | | |
| M98 | Push Button Assembly | | |
| R 1 | Carbon Film Resistor | 1/4W | 10KΩ |
| R 2 | | 1/4W | 10KΩ |
| R 3 | | 1/4W | 5KΩ |
| R 4 | | 1/4W | 2.2MΩ |
| R 5 | | 1/2W | 100KΩ |
| R 6 | | 1/4W | 2.2MΩ |
| R 7 | | 1/4W | 330Ω |
| R 8 | | 1/2W | 100KΩ |
| R 9 | | 1/4W | 470KΩ |
| R 10 | | 1/4W | 1KΩ |
| R 11 | | 1/2W | 47KΩ |
| R 12 | | 1/4W | 47KΩ |
| R 13 | | 1/4W | 100KΩ |
| R 14 | | 1/4W | 220KΩ |
| R 15 | | 1/4W | 22KΩ |
| R 16 | | 1/4W | 1MΩ |
| R 17 | | 1/4W | 22KΩ |
| R 18 | | 1/4W | 2.2MΩ |
| R 19 | | 1/4W | 470KΩ |
| R 20 | | 1/2W | 100KΩ |
| R 21 | | 1/4W | 3.3KΩ |
| R 22 | | 1/2W | 220KΩ |
| R 23 | | 1/2W | 470KΩ |
| R 24 | | 1/4W | 1KΩ |
| R 25 | | 1/2W | 47KΩ |
| R 26 | | 1/4W | 270KΩ |
| R 27 | | 1/4W | 330KΩ |
| R 28 | | 1/4W | 3.3KΩ |
| R 29 | | 1/2W | 22KΩ |
| R 30 | | 1/4W | 100KΩ |
| R 31 | | 1/4W | 47KΩ |
| R 32 | | 1/4W | 22KΩ |
| R 33 | | 1/4W | 220KΩ |
| R 34 | | 1/4W | 100KΩ |
| R 35 | | 1/4W | 100KΩ |
| R 36 | | 1/4W | 47KΩ |
| R 37 | | 1/4W | 47KΩ |
| R 38 | | 1/4W | 470KΩ |
| R 39 | | 1/4W | 4.7KΩ |
| R 40 | | 1 W | 390Ω |
| R 41 | | 1 W | 22KΩ |
| R 42 | | 1/4W | 47KΩ |
| R 43 | | 1/4W | 470KΩ |
| R 44 | | 1/4W | 2.2MΩ |
| R 45 | | 1 W | 100Ω |
| R 46 | | 1/2W | 4.7KΩ |
| R 47 | | 3/4W | 2.2KΩ |
| S 1 | Rotary Switch | SRN(2-31003PY-F48S) | |
| S 2 | Slide Switch | | |
| S 3 | Speed Selector Switch | (3.3/4 ips) | |
| S 4 | Speed Selector Switch | (1.7/8 ips) | |
| S 5 | Recording Switch | | |
| S 6 | Stop Switch | | |
| V 1 | 12AX7 | | |
| V 2 | 6267 | | |
| V 3 | 12AT7 | | |
| V 4 | 6BM8/P | | |
| V 5 | 6DA5 | | |
| VR 1 | Variable Resistor | NV-24CAR48 500KΩA | |
| VR 2 | Variable Resistor | NV-16FA 500KΩB | |

# NATIONAL MODEL RS-751

TROUBLE SHOOTING GUIDE 1

MALFUNCTIONS IN PLAY/RECORD MOTION



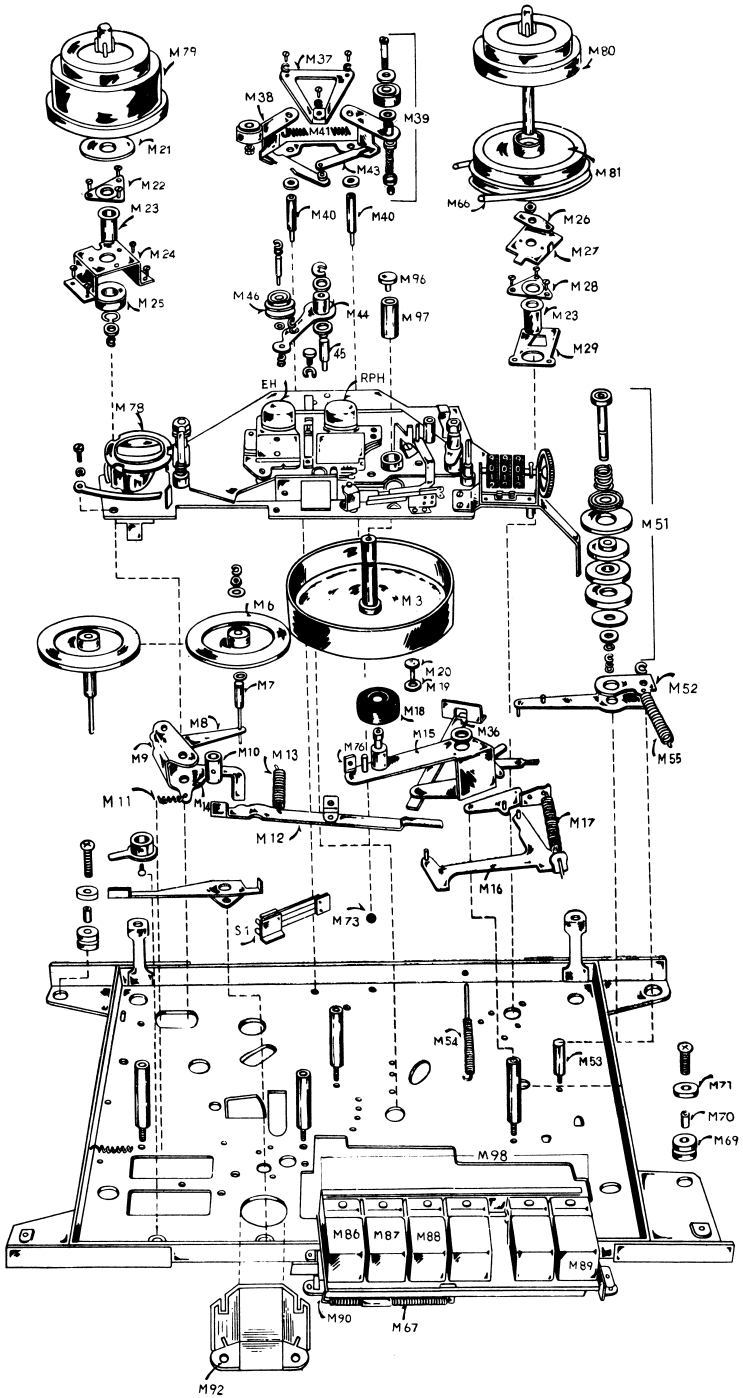


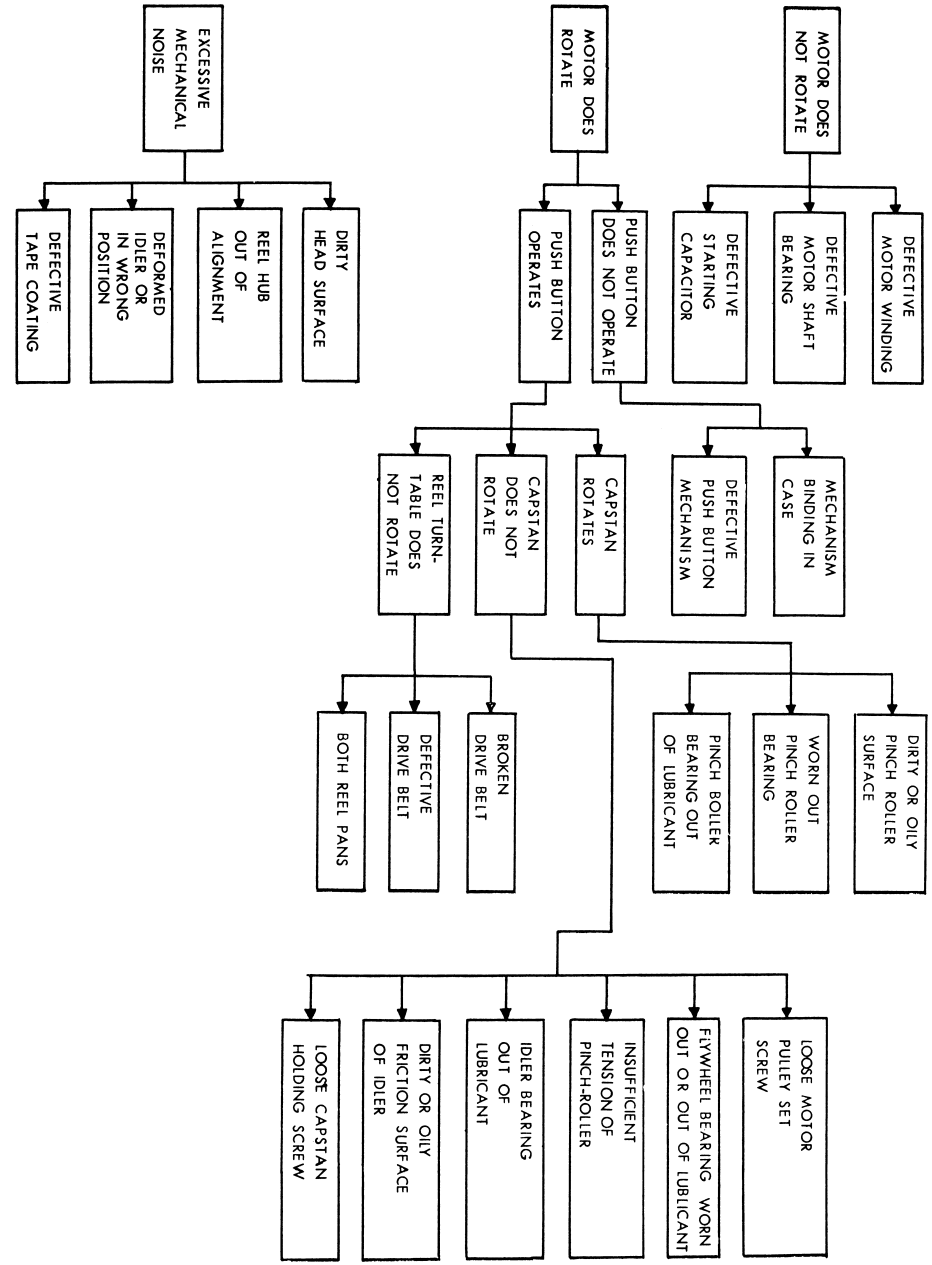

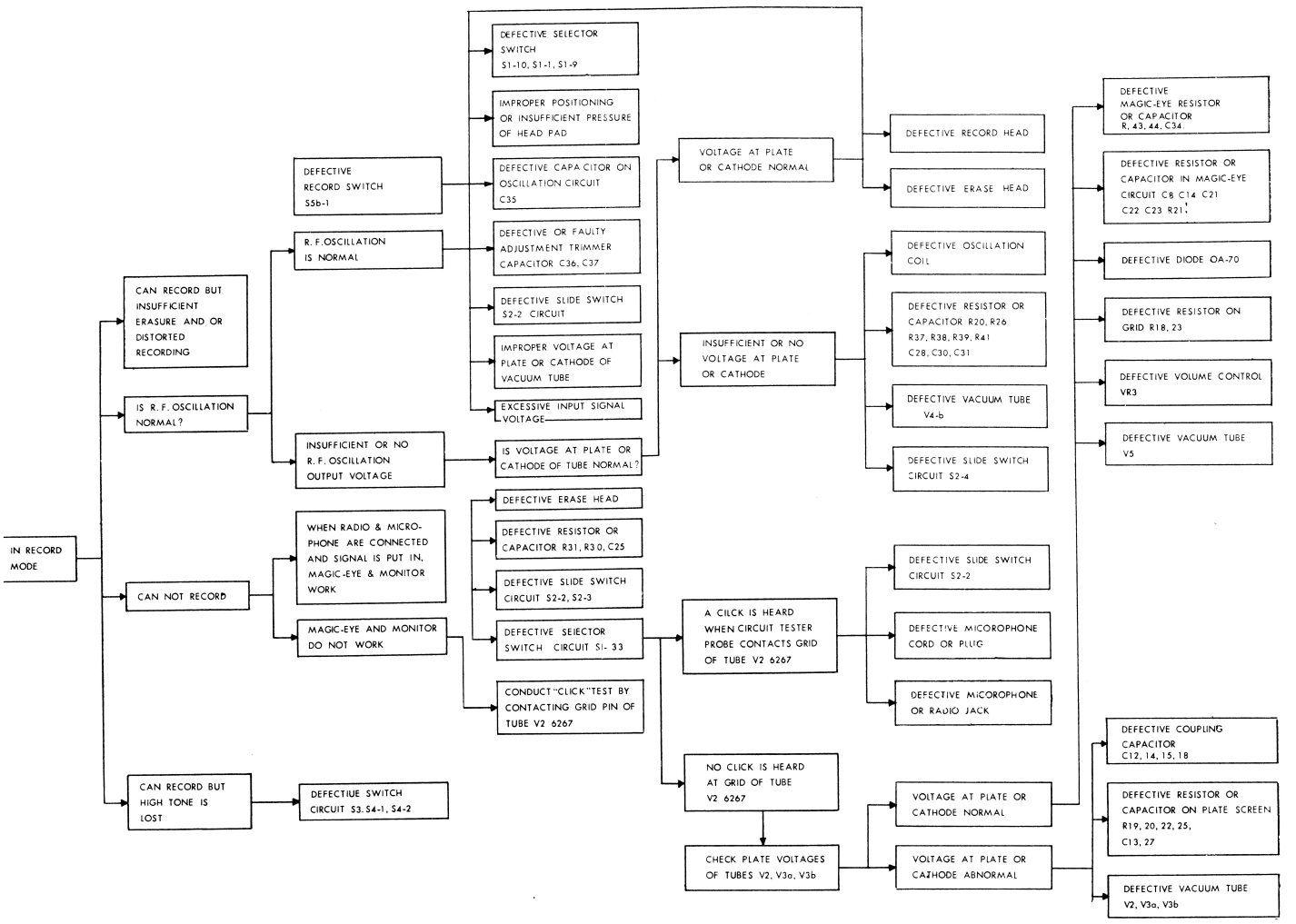


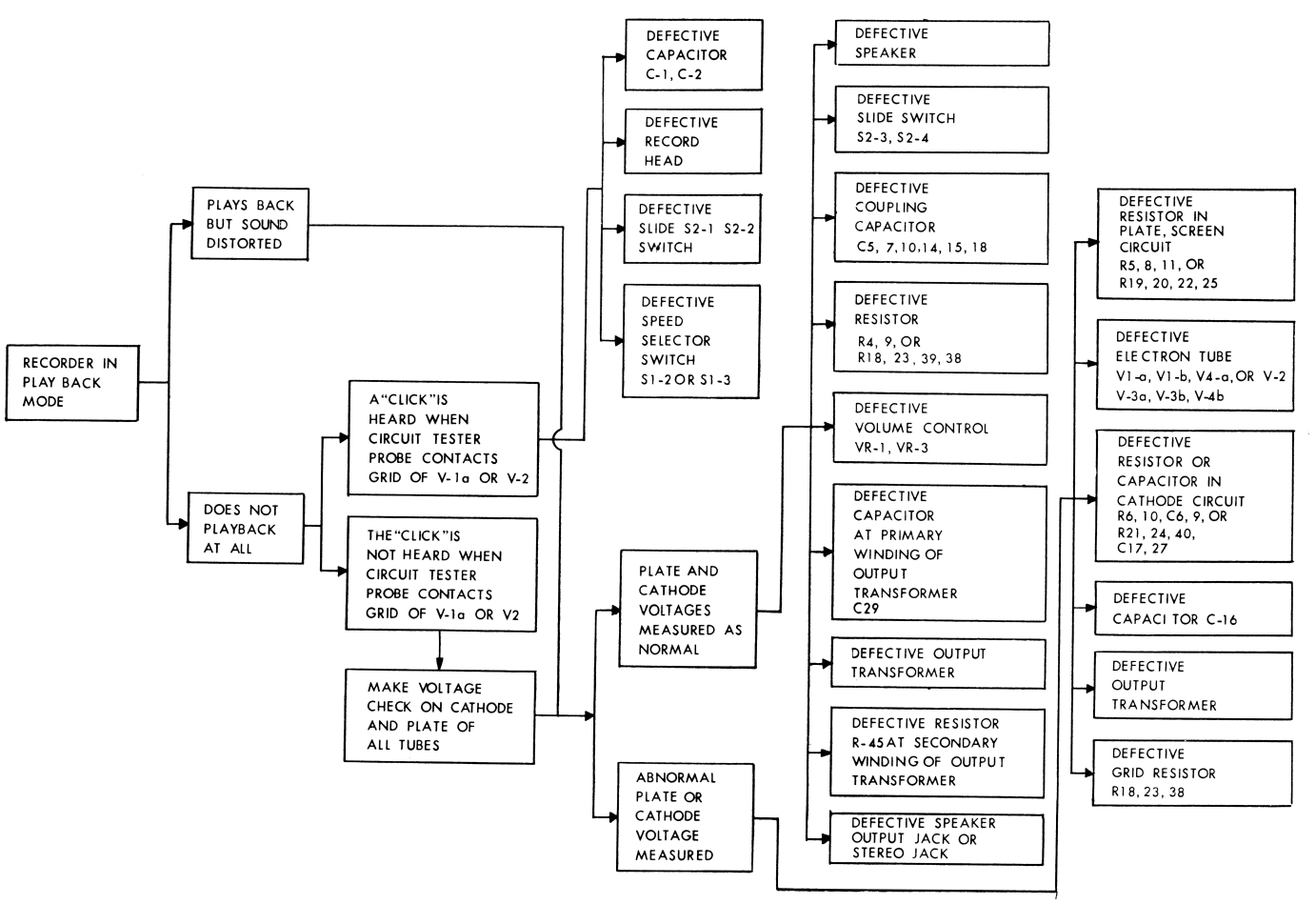


NATIONAL MODEL RS-751

N28-8.

# NATIONAL MODEL RS-751

## Channel Selector

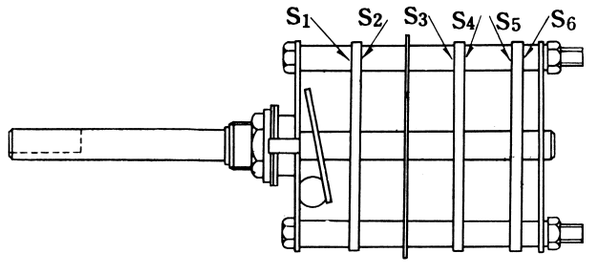


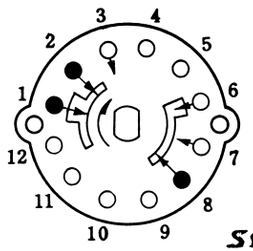


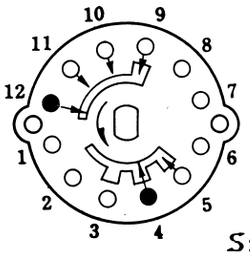


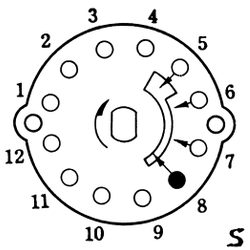


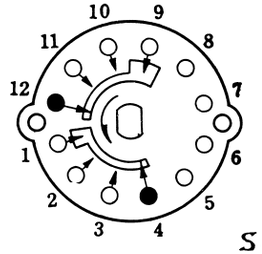


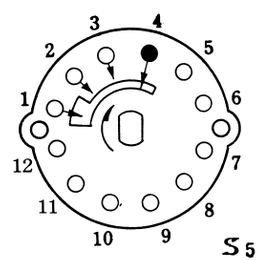


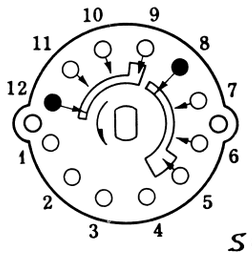


## Stereo Plag

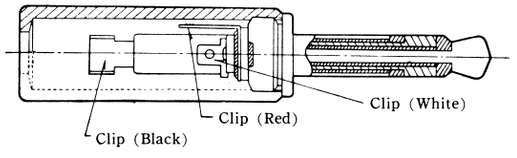


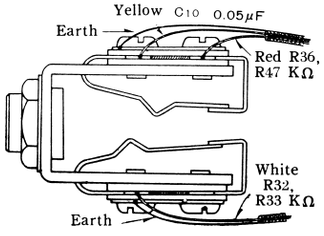


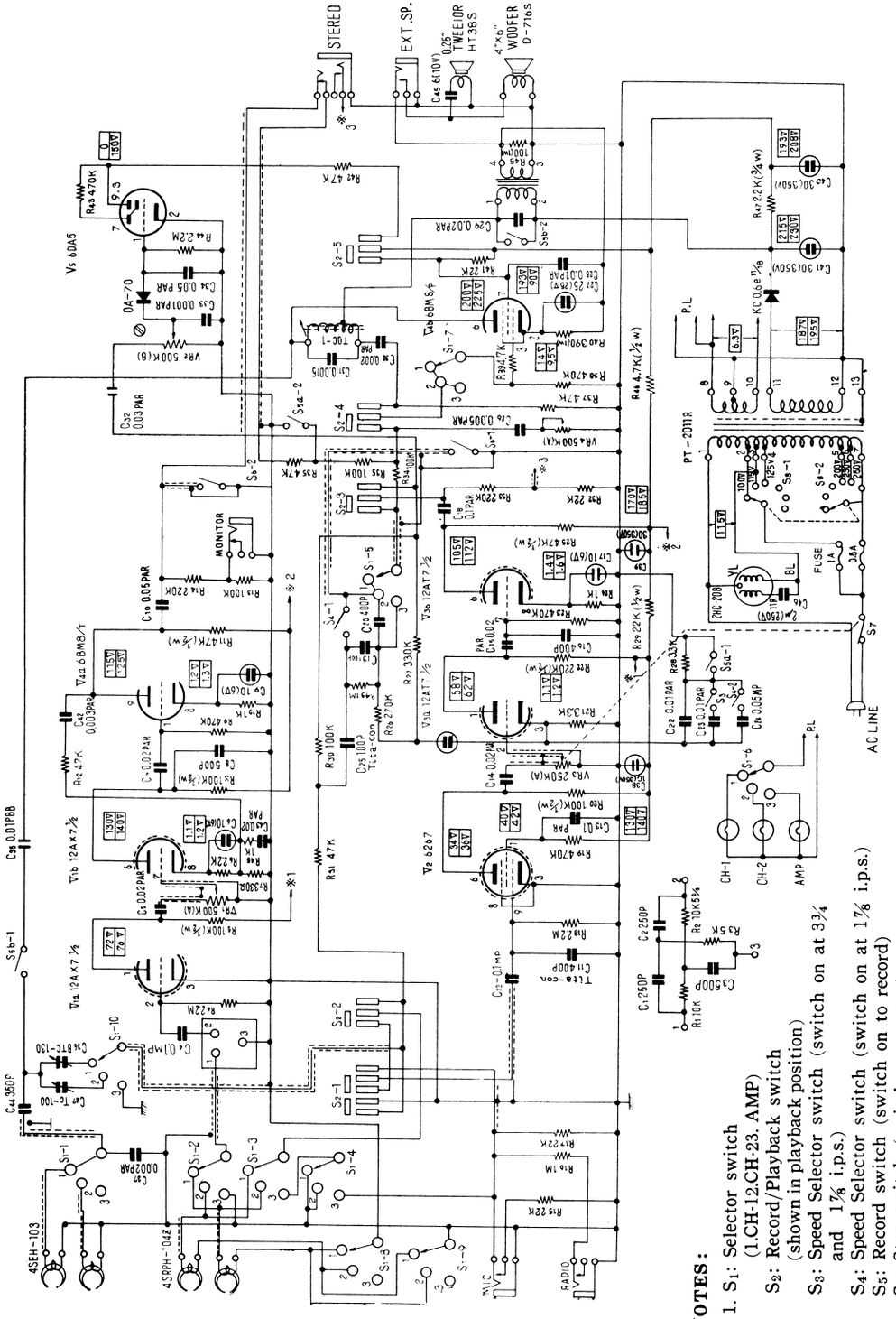


**NOTES:**

1. $S_1$: Selector switch (1.CH-12.CH-23. AMP)
   $S_2$: Record/Playback switch (shown in playback position)
   $S_3$: Speed Selector switch (switch on at 3¾ and 1⅞ i.p.s.)
   $S_4$: Speed Selector switch (switch on at 1⅞ i.p.s.)
   $S_5$: Record switch (switch on to record)
   $S_6$: Stop switch (switch on to stop)
   $S_7$: On Off switch, ganged with Volume Contorol $VR_3$
   $S_8$: AC Mains Voltage Adjuster switch (shown in 100V)
2. $VR_3$: Main Volume
   $VR_1$: Mix Volume
3. Non-indicated value of capacitor is μF.
4. Value and capacity of resisters are Ω and ¼ W besides the indicated.

# NATIONAL MODEL RS-751

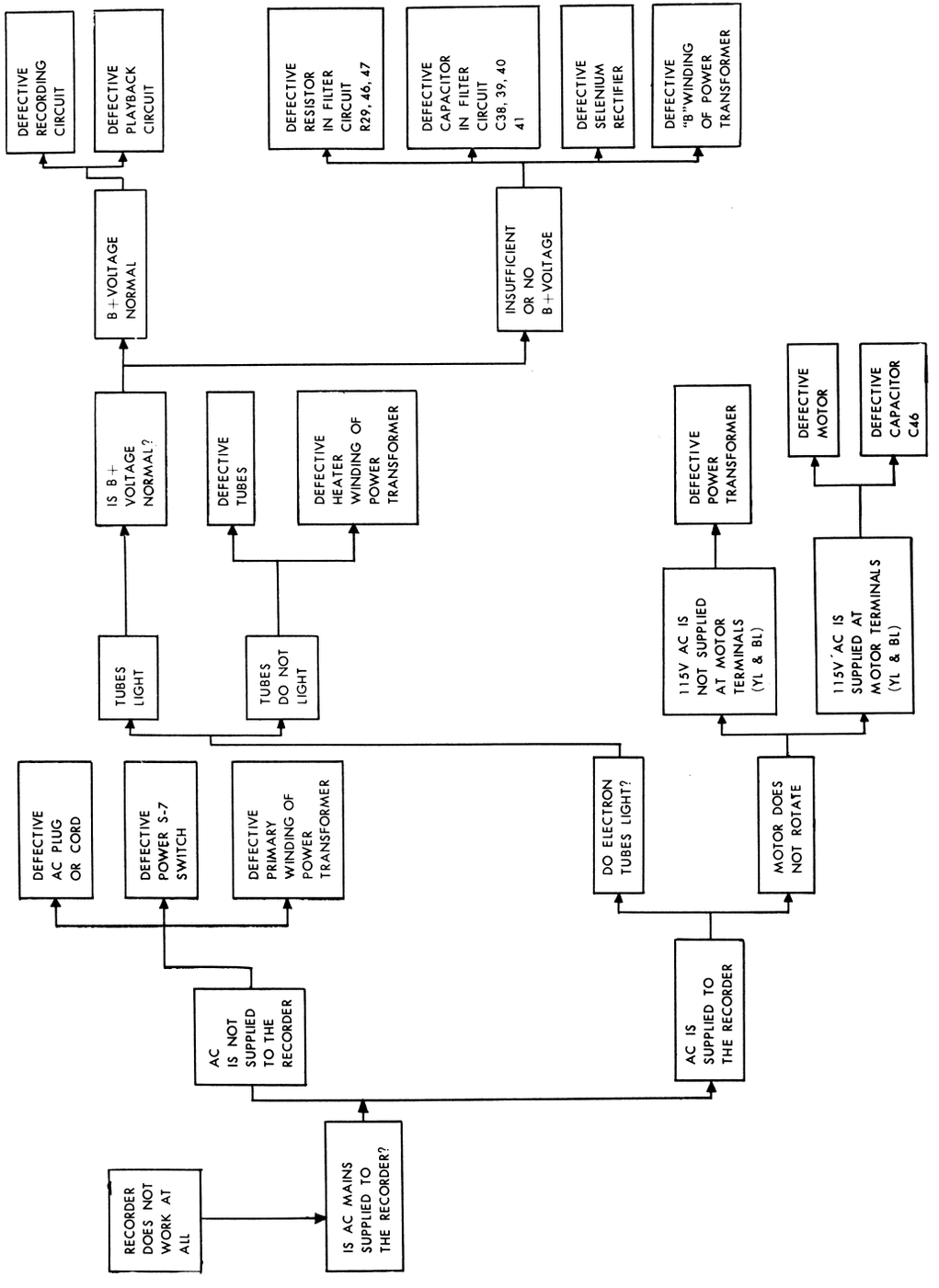


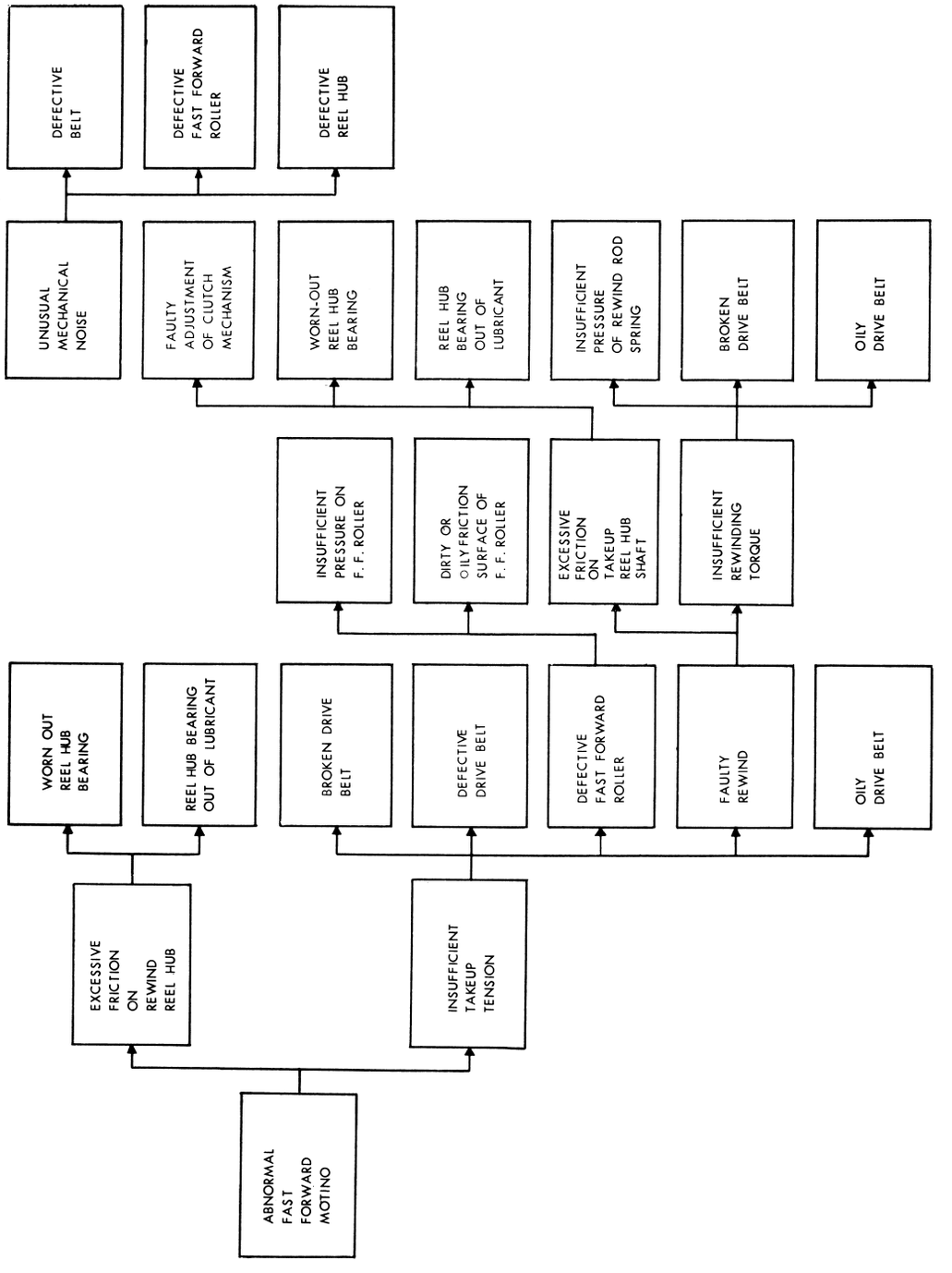

# N28-5. NATIONAL MODEL RS-751

| | | |
|---|---|---|
| VR 3 | Variable Resistor | SNV-24CAR46 250KΩAME |
| VR 4 | Variable Resistor | NV-24CR48 500KΩA |
| Diode | OA-70 | |
| RPH | Recording/Playback Head | 4SRPH-104Z |
| EH | Erasing Head | 4SEH-103 |
| TOC-1 | Oscillator Coil | |
| PT | Power Transformer | PT-2011R |
| OT | Output Transformer | OT-1079B |
| SP 1 | Permanent dynamic speaker | D-716S |
| SP 2 | Tweeter Speaker | HT-38S |
| | Selenium Rectifier | KC 0.6e 11/18 |

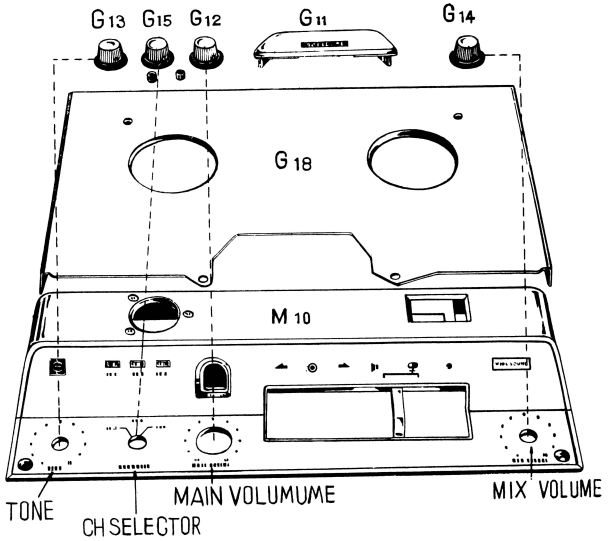


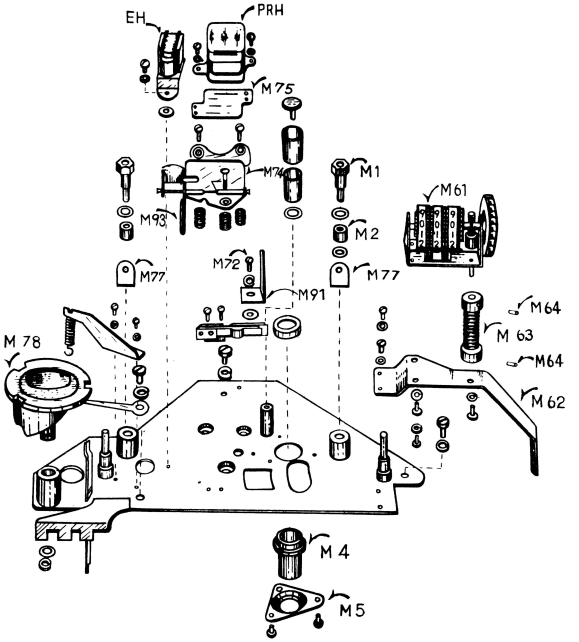


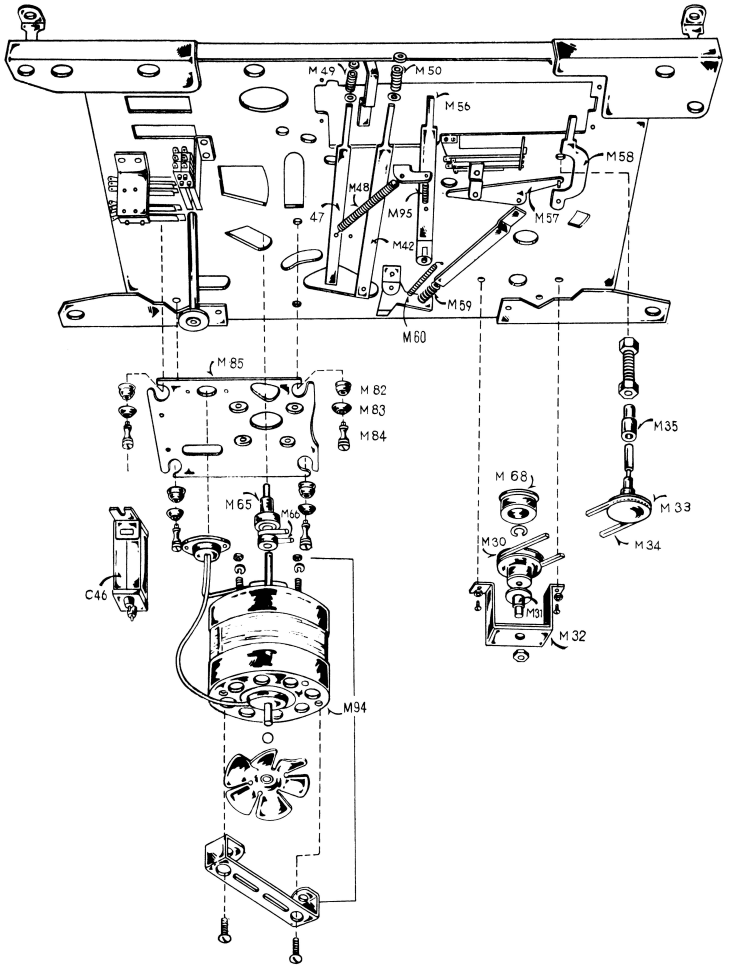

f) Pad Pressure

10—20 g for "Erase head" pad, 25—35 g for "Record/playback head" pad.

### Adjustment of Heads

a) Erase head

Run the tape, and bring the pad down towards the front. Check to see if the head core and tape are set as illustrated. If the core is position lower than expected, adiust the height by inserting a spacer.

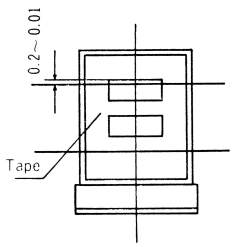


Fig. 15

b) Record/Playback head

Run the tape, and bring the pad down towards the front. Check to see the tape core and tape are set as illustrated. Adjust the screws (1), and (3) so that the head is accurately levelled and the tape core and tape are set as illustrated. Next, play a standard tape for adjusting angles (7½ ips, 7000 c/s) on the recorder, and reproduce signals of 7000 c/s. Find out where the maximum output is obtained, by adjusting the screws (2) and (3).

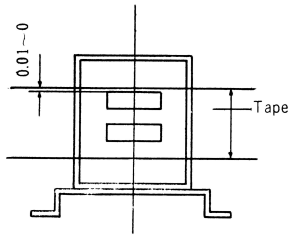


Fig. 16

After adjusting the angles, the head core and tape should be as shown in Fig. 16, 17. If the standard tape is not available, play back the properly recorded tape on a reliable racorder, and adjust by carefully listening so that high tones can be reproduced at maximum.

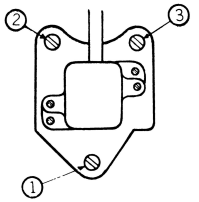


Fig. 17

### Adjustment of Amplifier

a) Stop switch

Install the switch so that the secondary side of the output transformer is short-circuited, in order to prevent the generation of noise from the amplifier through the speaker at the time of stop, F. F. and Rewind.

b) Speed Change Switch

Tape speed and frequency characteristic are changed by this Switch in such a way that the optimum characteristic is obtainable for each speed. This characteristic equalization is effected by either connecting capacitor to negative feedback circuit or by changing the value of capacitor.
S3 Adjust connecting position so that it is OFF at 7½ ips. and ON at 3¾ ips. (if it gets ON at 3¾ ips. it remains ON at 3¾ ips. also)
S4 Adjust the position so that S4-1 and S4-2 get ON at 1⅞ ips. and OFF at 3¾ ips. (if these get OFF at 3¾ ips. these remain OFF at 7½ ips. also)

c) Record Switch

(S5) Adjusting positions of S5a-1 and S5a-2 so that these are ON when Recording and OFF when Playing-back.
Adjust connecting positions of S5b-1 and S5b-2 so that these are ON when Recording and OFF when Playing-back.

d) Oscillation Frequency

Adjust the dust-core adjusting screw of the oscillation coil so that the oscillation frequency of the recording bias and erasing high frequency occillation circuit is kept at 60 KC ±10%. Connect the resistor with 10Ω or so in series to the ground side of the erase head, and measure the frequency of the voltage at both ends of the resistor and compare it with the frequency of the standard oscillator (lissajous wave-form to be projected on the oscilloscope of the TV picture tube).

e) Bias Current

Proper bias should be given to optimum recording. Adjust the oscillation frequency and connect the resistor with 100Ω or so in series to the ground side of the Record/Playback head. Measure the voltage at both ends. Adjust with the trimmer condenser.
Proper AC bias: 0.25 mA (voltage at both ends in the case of 100Ω resistor $0.25 \times 10^{-3} \times 100 = 0.25$ V).

f) Erasing current

If the erasing current is not correct, an insufficient erasure or over-heating of the erase may occur. Put the resistor with 10 Ω or so to the ground side of the erase head, and measure the voltage at both ends.
Proper erasing current 25-45 mA (voltage at both ends in the case of 10 resistor: 0.25-0.45 V).
If the proper value is not obtained, adjust by changine the capacity of the condenser, C44 350 PF, connected series to the erase head.

g) Record level indicator

If the recording level is not proper, an insufficient playbadk output, or sound distortion may occur. To cure this, either short-circuit the grid-ground of the oscillation tube v4b 6BM8/P, or short-circuit the plate-grid of the oscillation coil TOC-1. Then, stop oscillation and adjust the semi-fixed volume control, VR 2 500 KΩ (B) so that "Magic Eye" closes right when the signal current flowing in the record head registers 0.03 mA at 1 K c/s.

## LUBRICATION CLEANING

(Parts to be oiled are so marked)

| | |
|---|---|
| Capstan bearing: | 1-2 drops |
| Pinch roller: | 1 drop |
| Idler: | 1 drop |
| Motor: | 1-2 drops |

Be careful not to over-lubricate or injure other parts with unnecessary oiling. Spindle or machine oil should be used. Rubber parts (e. g. idler, belt, pinch roller) may slip if oiled. Clean such parts with a cloth saturated with carbon tetrachloride.

## 7. MAINTENANCE

a) Record/playback & Erase Heads

Good performance of the recorder depends largely on the maintenance of heads. Accumulation of dust on head cores should not be overlooked. Dust must be cleaned off with carbon tetrachloride.
Heads might lose their characteristics if used too long since they always have the friction with the tape. Replace with new ones after about 1,000 hours of use.

b) Motor

The motor rarely goes wrong, but occasional oiling is necessary. Oil it after each 500 hours of performance. Use spindle oil or machine oil.

c) Mechanical parts

1) Idler
Clean the surface of the ilder in contact with the motor-pulley with carbon tetrachoride. Also, clean the surfaces of the motor-pulley and flywheel in contact with the capstan. Oil 2-3 drops on bearings after every 200 hours of performance.

3) Capstan
Clean the capstan with benzene. Oil 1-2 drops on bearings after every 200 hours. Keep free of oil the surface of the capstan in contact with the pinch roller rubber may be damaged.

d) Tension Pulley for rewind

Oil bearings once every 200 hours. Clean the surface in contact with the belt with benzene. Be sure to wipe off any amount of oil on the rubber surface in order to prevent slipping.

## ELECTRICAL CIRCUITS

### Recording Circuit

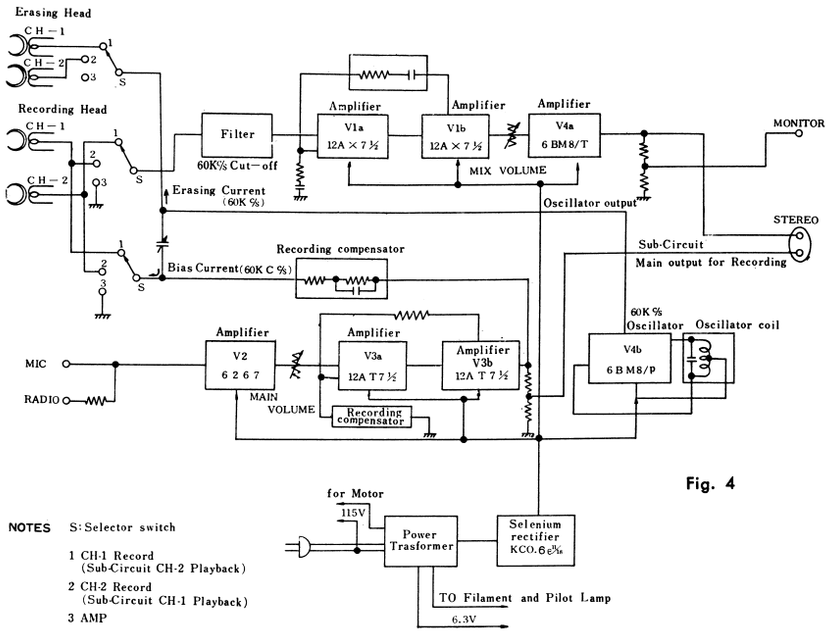


Fig. 4

NOTES S: Selector switch

1 CH-1 Record (Sub-Circuit CH-2 Playback)

2 CH-2 Record (Sub-Circuit CH-1 Playback)

3 AMP

### Playback Circuit

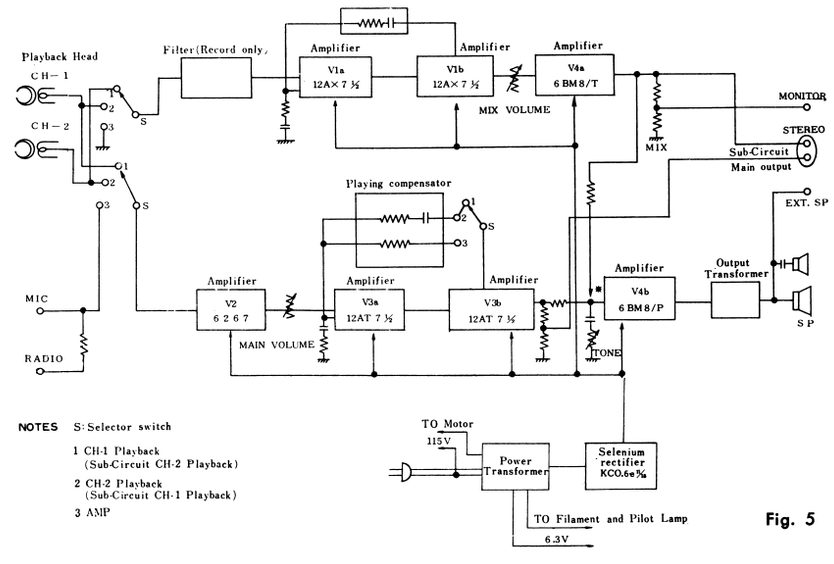


Fig. 5

NOTES S: Selector switch

1 CH-1 Playback (Sub-Circuit CH-2 Playback)

2 CH-2 Playback (Sub-Circuit CH-1 Playback)

3 AMP

## OPERATIONS

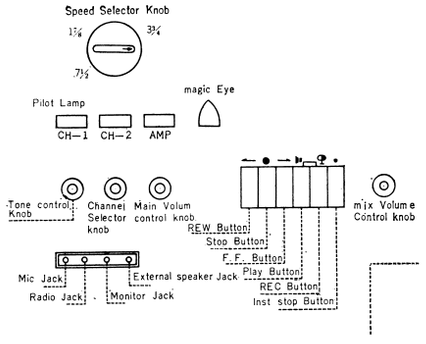


Fig. 6

### Operation

1) Turn the Volume Control knob clockwise. The mechanism will start working.

2) If one of the push button is pressed, the one pressed will automatically come up.

3) In playback or recording, press the Stop button first and the playback or the F. F. button as the case may be.

4) For playback, press the Stop button first and the Playback one. In rewind or F.F. position, the Instant Stop button does not work.

5) For recording, press both the Playback and Record buttons. The Record button alone does not set the amplifier to effectuate recording.

6) Tape speed should not be changed while the machine is in Record or Playback position.

7) Switch on by turning the Volume Control knob clock wise (refer to Item I above.) The pilot lamp will go on, and the motor and the reel-pulley will start rotating. But, the supply-reel and takeup-reel holders will remain off.

8) Turn the speed selector knob to the speed you like, and the idler will be set at the proper position.

9) Press the Playback button. The idler and the pinch-roller will be set against the capstan and start rotating. The takeup reel will also start rotating. and wind up, the tape. Playback works this way.

10) If the Instant Stop button is pressed in Record or Playback position, the pinch roller will be freed and the supply-reel holder braked. The tape will stop instantly. Release the button and the tape will start turning on.

11) Press the Rewind button, and the tape will be rewinded fast.

12) Press the F.F. button, and the takeup reel will rotate and forward the tape fast.

### SPEED CHANGE

(Turn the speed selector knob)

The turning of the knob makes the cam beneath it move up or down the idler lever shaft, and sets the idler at the proper position of the motor pulley. Press the Playback button to free the idler lever (A), and the idler will be pressed against the motor pulley and the flywheel with a spring. In Playback position, the safety device in the knob prevents the accidental change of tape speed.

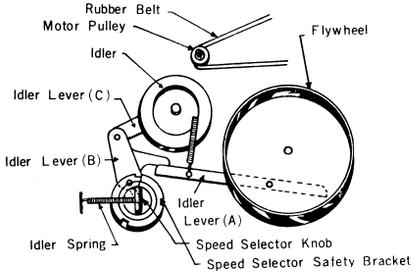


Fig. 7

### RECORD & PLAYBACK

In record position, press the Record button, and the switch lever will be pushed so as to set the amplifier alone for recording. Press the Blayback button, and the idler will be pressed against the motor-pulley and flywheel, the capstan will rotate, the pinch roller pressed against the capstan, the tape pads pressed against the heads, and the tape will turn on.

In this case, the takeup reel is pushed up by the playback rod and the clutch plate, and the felt disk is pressed against the steel surface by a spring of foam resin. The friction generated at this time makes the reel holder rotate. The takeup reel winds up the tape sent out through the capstan and the pinch roller without slack. The supply reel holder rotates under the friction between the steel surface, the back tension is given to the tape.

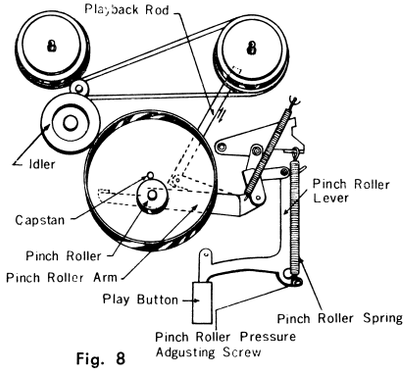


Fig. 8