SERVICE MANUAL

Mini In-Dash "Auto-Stop" Car Stereo Cassette Tape Player with AM/FM Stereo Radio

RS-2050N

RS ROADSTAR ROADSTAR®

Specifications

Item	Condition	Unit	Limit	Nominal
Cassette Tape Section				
Tape speed	3 kHz	%	-1 +3.5	±1
Wow/flutter WRMS	3 kHz	%	0.3	0.2
Output power (at 1 kHz)	MAX.	W	4	6
	10% THD	W	3.5	4.5
Distortion (at ref. output)	1 kHz	%	3	2
S/N ratio (at ref. output)	1 kHz	dB	40	45
Separation (at ref. output)	1 kHz	dB	28	33
Track crosstalk (at ref. output)	1 kHz	dB	38	43
Tone effect (at ref. output)	6.3 kHz	dB	20±5	20±0
Channel balance (L & R) (at ref. output)	1 kHz	dB	±3	±1
Noise level (blank tape)	MIN.	mV	5	3
	MAX.	mV	50	40
Frequency response (1 kHz 0.775V = 0 dB)	125 Hz	dB	±6	±3
	6.3 kHz	dB	±6	±3
Current drain (at 1 kHz)	R.O.	mA	—	—
	MAX.	mA	—	—
F.F. time	C-60	SEC.	200	180
Take up torque		gcm.	45 - 70	55
FM/MPX Receiver Section				
Frequency range	MIN.	MHz	87.5	87.2
	MAX.	MHz	108	109
Intermediate frequency		MHz	10.7±0.5	10.7
Maximum sensitivity	90 MHz	μV	3.5	2.5
	98 MHz	μV	3.5	2.5
	104 MHz	μV	3.5	2.5
Sensitivity for 30 dB S/N	90 MHz	μV	7	5
	98 MHz	μV	7	5
	104 MHz	μV	7	5
Dial calibration	90 MHz	MHz	±1	±0.5
	98 MHz	MHz	±1	±0.5
	104 MHz	MHz	±1	±0.5
S/N ratio (at 1 mV input)	98 MHz	dB	45	50
IF rejection	90 MHz	dB	50	70
Image rejection	104 MHz	dB	38	43
3 dB limiting sensitivity (at 1 mV input)	98 MHz	μV	10	8
A.F.C. holding range (at 1 mV input)	98 MHz	kHz	700	600
Frequency response in FM radio section (1,000Hz = 0 dB), -6 dB down (at 1 mV input)	LOW	Hz	100	50
	HIGH	Hz	3,000	3,500
AM suppression (at 1 mV input)		dB	30	35
Output power (at 1 mV input)	MAX.	W	4	6
	10% THD	W	3.5	4
Distortion (at ref. output)	98 MHz	%	3	2
Overload signal for 10% dist	98 MHz	dB	106	>126
Stereo separation 1 kHz	98 MHz	dB	20	25
Stereo lamp sensitivity (on)	98 MHz	μV	20	15
AM Receiver Section				
Frequency range	MIN.	kHz	525	515
	MAX.	kHz	1,605	1,650
Intermediate frequency		kHz	455±5	455
Maximum sensitivity	600 kHz	μV	20	15
	1,000 kHz	μV	20	15
	1,400 kHz	μV	20	15
Sensitivity for S/N 20 dB	600 kHz	μV	40	30
	1,000 kHz	μV	40	30
	1,400 kHz	μV	40	30
Dial calibration	600 kHz	kHz	±50	±30
	1,000 kHz	kHz	±50	±30
	1,400 kHz	kHz	±50	±30
S/N ratio (at 5 mV input)	1,000 kHz	dB	35	40
IF rejection	600 kHz	dB	30	35
Image rejection	1,400 kHz	dB	50	55
A.G.C. figure of merit (at 100 mV input)	1,000 kHz	dB	52	63
Selectivity (off tuning ±10 kHz)	1,000 kHz	dB	20	25
Band width	-6 dB	kHz	—	—
	-40 dB	kHz	3	5
Frequency response in AM radio section (1,000 Hz = 0 dB), -6 dB down (at 5 mV input)	Low	Hz	100	50
	High	Hz	3,000	3,500
Output power (at 5 mV input)	MAX.	W	4	6
	10% THD	W	3.5	4
Whistle modulation of I.F. 2nd & 3rd harmonic	5mV input	%	5	2.5
Distortion (at 500 mW output)	1,000 kHz	%	5	3

General Instructions

Prior to servicing, check the following:

- Check that the head is not dirty. If it is dirty, either the level of the sound will drop or the high frequencies will deteriorate.
  Clean the head with a cleaner pen or a Q-tip dipped in alcohol.
- Check that the speakers are connected correctly. (Refer to the speaker connection diagram in the Owner's Manual.)
- Check that the grounding is completely satisfactory. If not grounded properly, the required power will not be supplied.
- Check that the antenna plug is connected securely.
- Check that the power switch is on.
- Check that the fuse is not blown.
  Never use a fuse with a larger rating than specified. Do not by-pass the fuse.
- Check if the pinch roller or capstan is contaminated with oil, dust or any other substance. Clean them with a Q-tip dipped in alcohol to reduce wow-flutter and to maintain the correct tape speed.

Parts & Controls

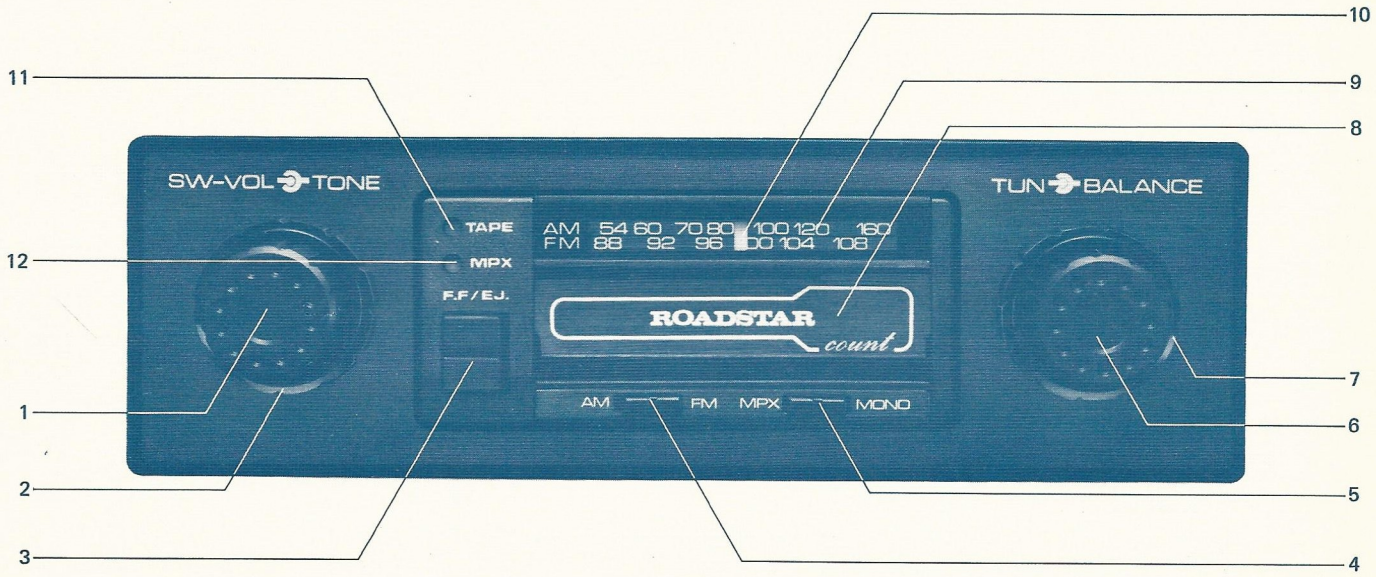

Fig. 1

1. Power switch & volume control
2. Tone control
3. F.F. & eject button
4. AM/FM switch (push in FM).
5. Mono. stereo, switch (push in Mono.)
6. Tuning control
7. Balance control
8. Tape slot
9. Dial scale
10. Dial pointer
11. Tape indicator lamp
12. Stereo indicator lamp

To Remove Metal Case

To take off the top cover remove screws numbered 1–4 as shown in Fig. 2

The nose piece is removed by undoing screws 5 and 6 and pulling it forward.

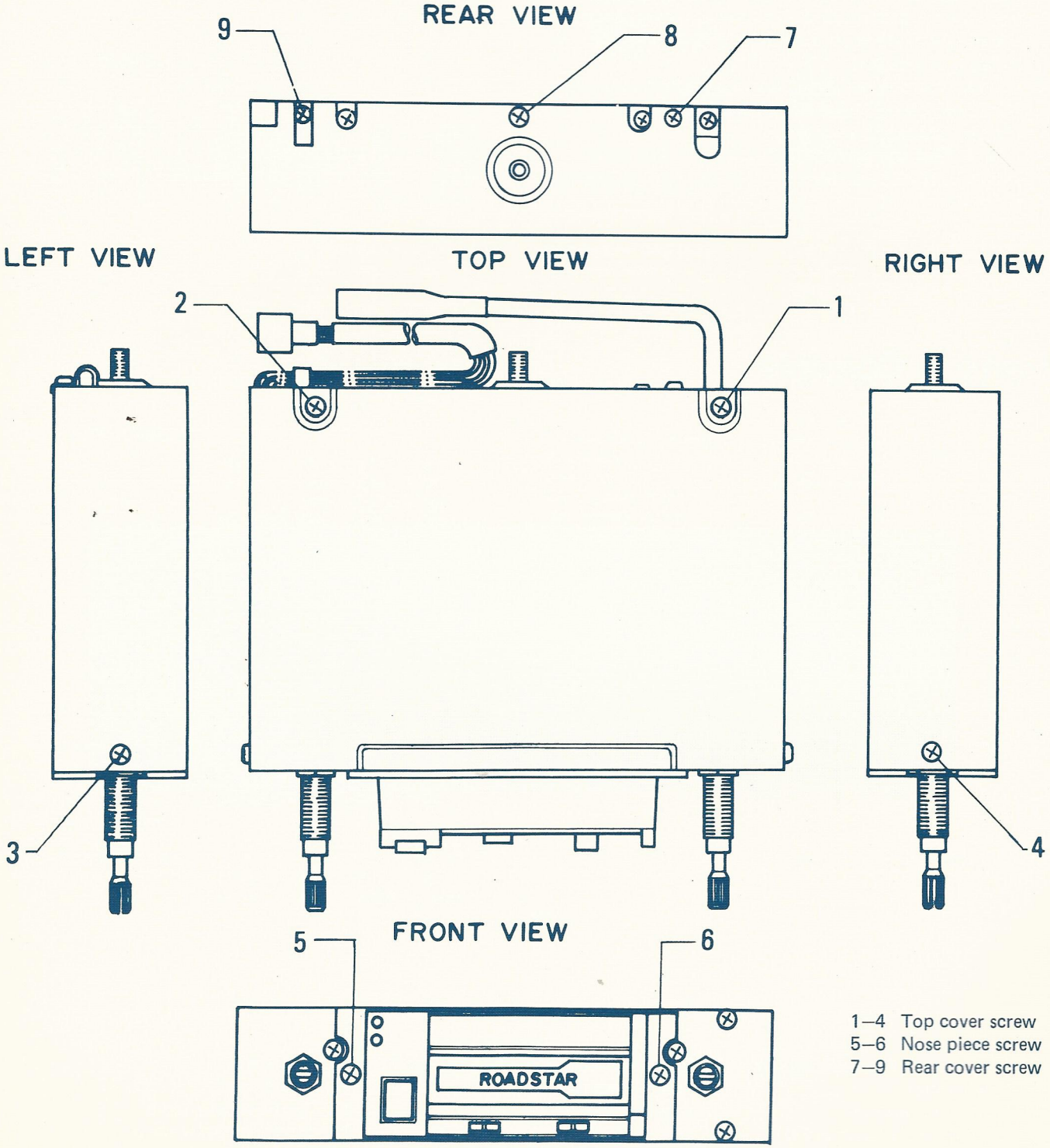

1–4 Top cover screw
5–6 Nose piece screw
7–9 Rear cover screw

Fig. 2

AM and FM-MPX Alignment Procedure

NOTES:
1. Check for specified source voltage–DC 14V.
2. Connect an AC voltmeter (VTVM) across speaker or dummy load (4 ohms, 10W, wire-wound resistor). See Fig. 3.
3. Signal input must be kept as low as possible to avoid overload and clipping (use highest possible sensitivity of output indicator).
4. Repeat adjustment to insure good results.
5. Non-metallic alignment tools must be used (especially for FM alignment).
6. Alignment location details: See Fig. 5.9.10.

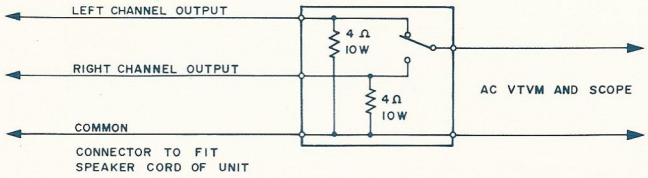

DUMMY LOAD (FOR STEREO UNIT) **Fig. 3**

AM IF & RF alignment using AM signal generator
(1) Press the AM/FM button to set the radio for AM reception.
(2) AM signal generator should be coupled with antenna receptacle through dummy antenna (See Fig. 4).
(3) Set volume control to maximum.
(4) Modulation 400 Hz 30%.

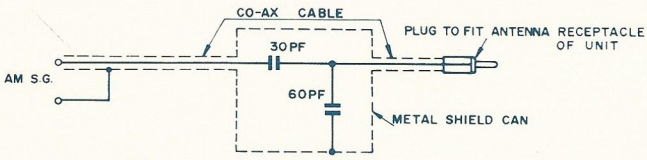

AM DUMMY ANTENNA **Fig. 4**

1. IF alignment
The IF amplifier circuit in this unit uses a ceramic filter. Adjust T7 for maximum response. (at 455 kHz or 470 kHz)

2. Alignment of receiving frequency range
1) Adjust TC3 for maximum response of a 1,650 kHz signal with radio dial indicator set to the high frequency end stop point.
2) Adjust T6 for maximum response of a 520 kHz signal with the radio dial indicator set to the low frequency end stop point.

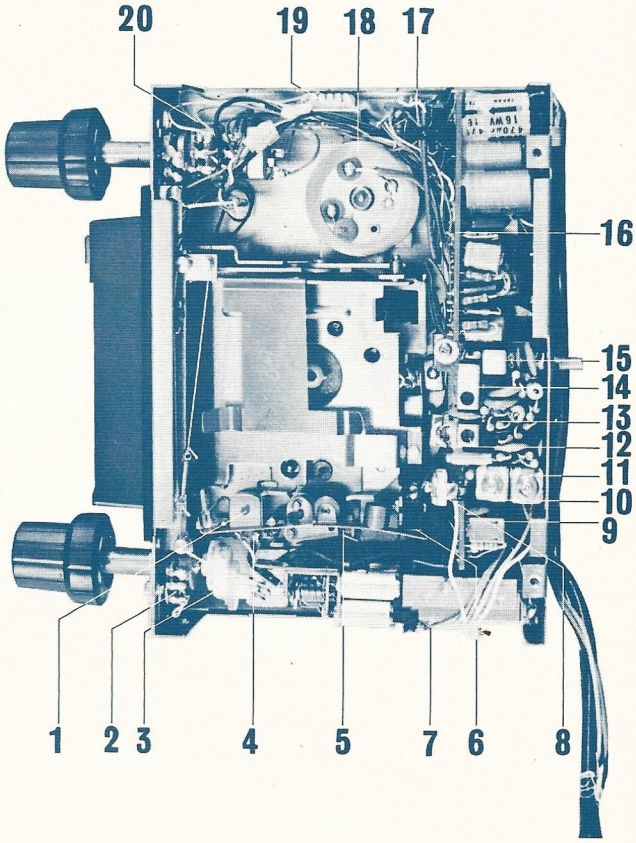

Fig. 5

1. Cassette tape head
2. Balance volume
3. plastic coupling joint
4. Tape sensor arm
5. Pinch roller
6. Micro switch
7. FM front end
8. Antenna trimmer TC1
9. T1 (FM IFT)
10. TC3 (AM. OSC. trimmer)
11. TC2 (AM RF. trimmer)
12. T6 (AM OSC trans.)
13. AM PC. board
14. AM IFT T7
15. AM IFT
16. Main PC. board
17. Flasher PC. board
18. Motor
19. Choke trans.
20. Tone/volume control

3. Sensitivity alignment

Tune in a 1,400 kHz signal at the corresponding dial point. Adjust TC1 and TC2 for maximum response.

4. Tracking check

Tune in respective signals at 1,400 kHz, 1,000 kHz and 600 kHz to check tracking standard correctness.

FM, IF alignment using 10.7 MHz FM sweep generator

(1) Press the AM/FM button to set the radio for FM reception.
(2) Inject test signal to TP terminal of Front-End Pack. (Fig. 7)
(3) Connect high side of sweep generator through 0.01 mfd capacitor to the No. 1 terminal of IC-2. Low side to ground.

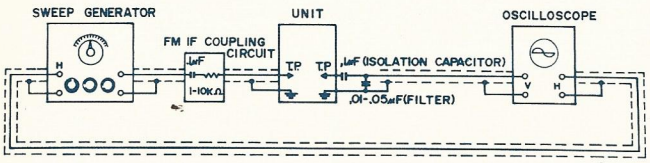

Fig. 6

(4) Adjust T3 (blue) so that the 10.7 MHz marker coincides with the mid-point of the ("S" curve) pattern.
(5) Adjust T1 and T2 to obtain maximum wave amplitude.

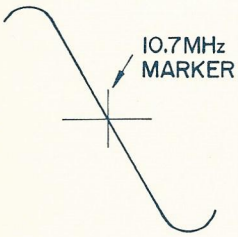

(RED)

NOTE:

1. FM Sweep Generator is convenient for FM/IF alignment, because Ceramic Filters are used in the IF circuit.
   Five kinds of Ceramic Filters are used and they are different in their center frequencies as shown below. RED: 10.7 MHz, BLUE: 10.67 MHz, ORANGE: 10.73 MHz, BLACK: 10.64 MHz, WHITE: 10.76 MHz.
2. If the Ceramic Filters EXCEPT RED are used, 10.7 MHz market will not appear at the center of "S" curve.
3. The color of Ceramic Filters used in this radio is different according to the production lots, but the same color-dotted. Filters should be replaced on the individual unit.
4. Be careful of static coupling between output lead of sweep generator and input lead of scope. The leads must be as short as possible and carefully shielded.

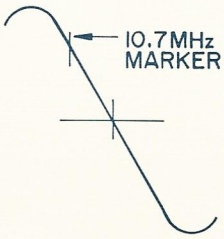

(WHITE , ORANGE)

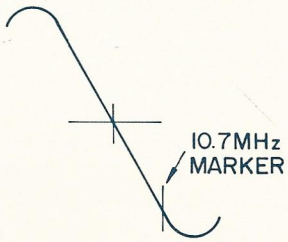

(BLACK , BLUE)

FM RF alignment using FM signal generator

1. Set the radio for FM reception. (See Fig. 7)
2. 400 Hz 22.5 kHz deviation.
3. Adjust TC4 for maximum response of an 87.5 MHz signal with Radio Dial Indicator set at the low frequency end stop point.
4. Tune in a 106 MHz signal at the corresponding dial point. Adjust TC5 and TC6 for maximum response.

FM, MPX alignment

1. Alignment conditions

1) Use a SSG test signal modulated externally with an MPX generator.
2) Use compatible MPX signal.
3) Modulation frequency at 1,000 Hz.
4) Feed test signal to Antenna Jack.

2. Alignment procedure

1) By adjusting 20KΩ VR1 make MPX lamp go on. (Fig. 8)
2) By adjusting 5KΩ VR2 obtain maximum separation between R and L channels.
3) The resulting difference in output levels should be more than 25 dB.
4) Check to see that an input signal of less than −25 dB illuminates the MPX indicator lamp.

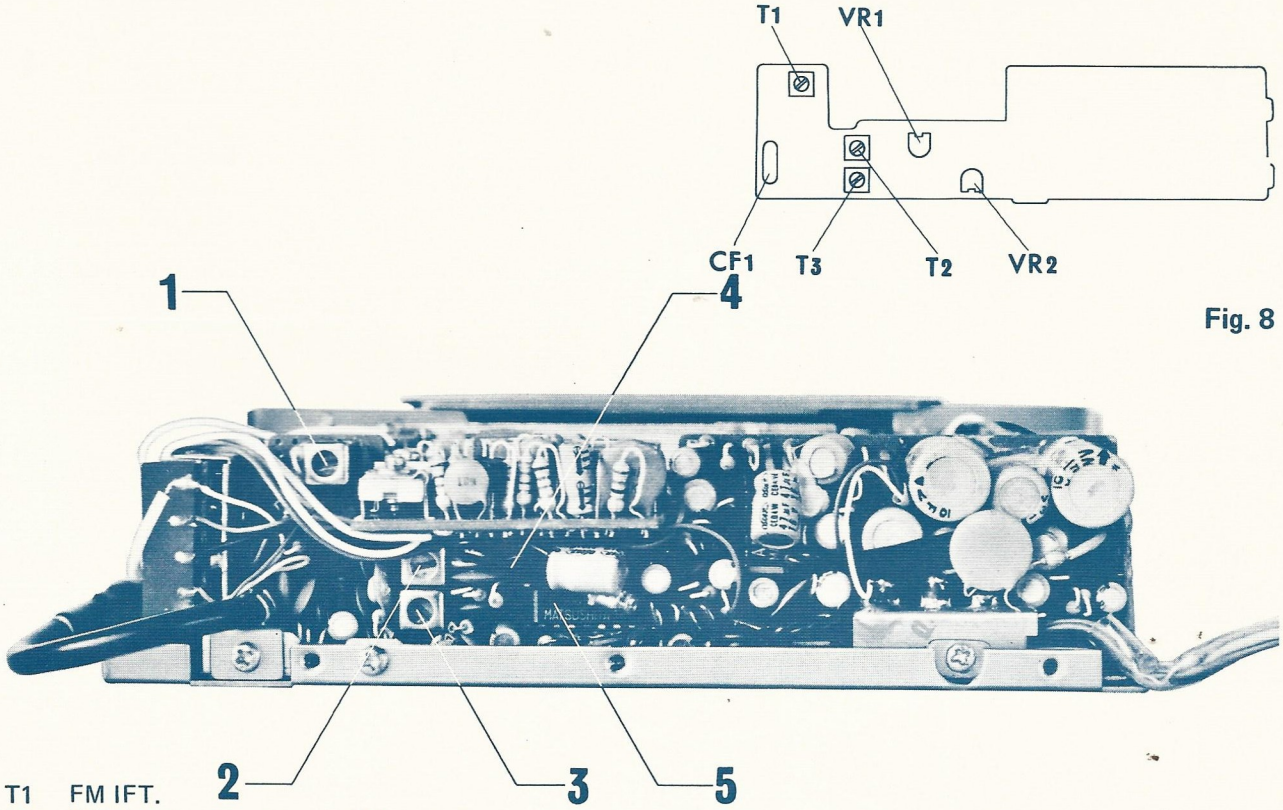

Fig. 8

1 T1 FM IFT.
2 T2 FM detector transformer (A)
3 T3 FM detector transformer (B)
4 VR1 20KΩ (frequency adjust)
5 VR2 5KΩ (separation adjust)

Fig. 9

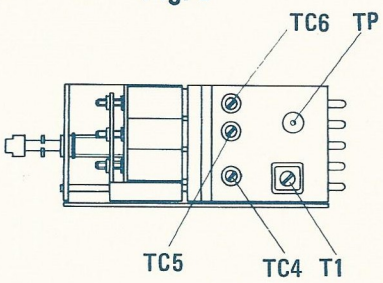

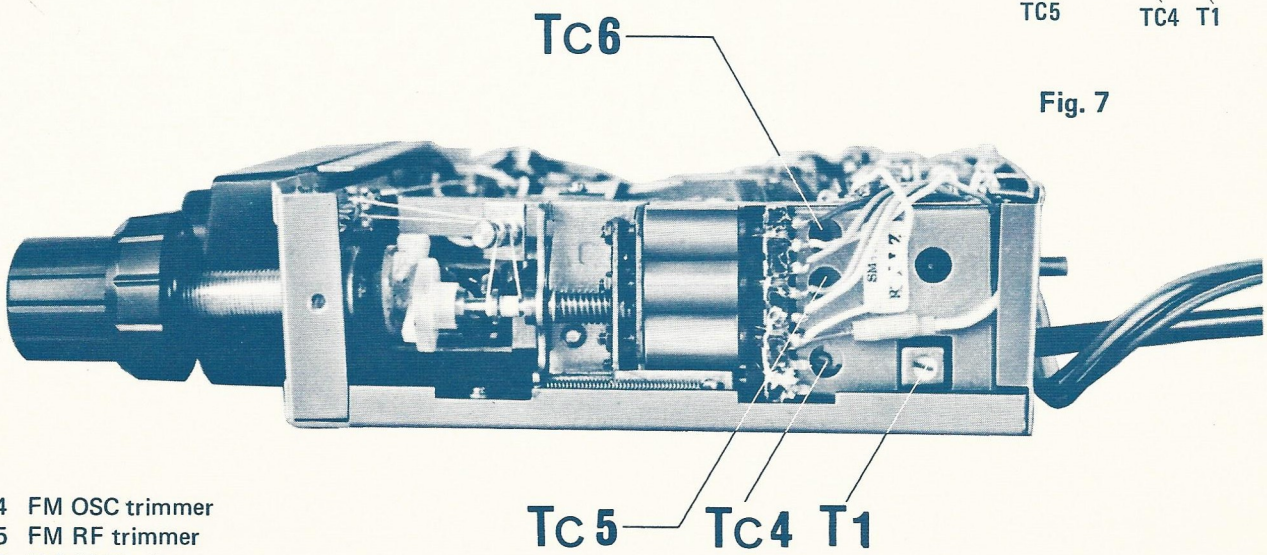

Fig. 7

TC4 FM OSC trimmer
TC5 FM RF trimmer
TC6 FM ANT trimmer
T1 FM IFT

Fig. 10

Exploded View(A)

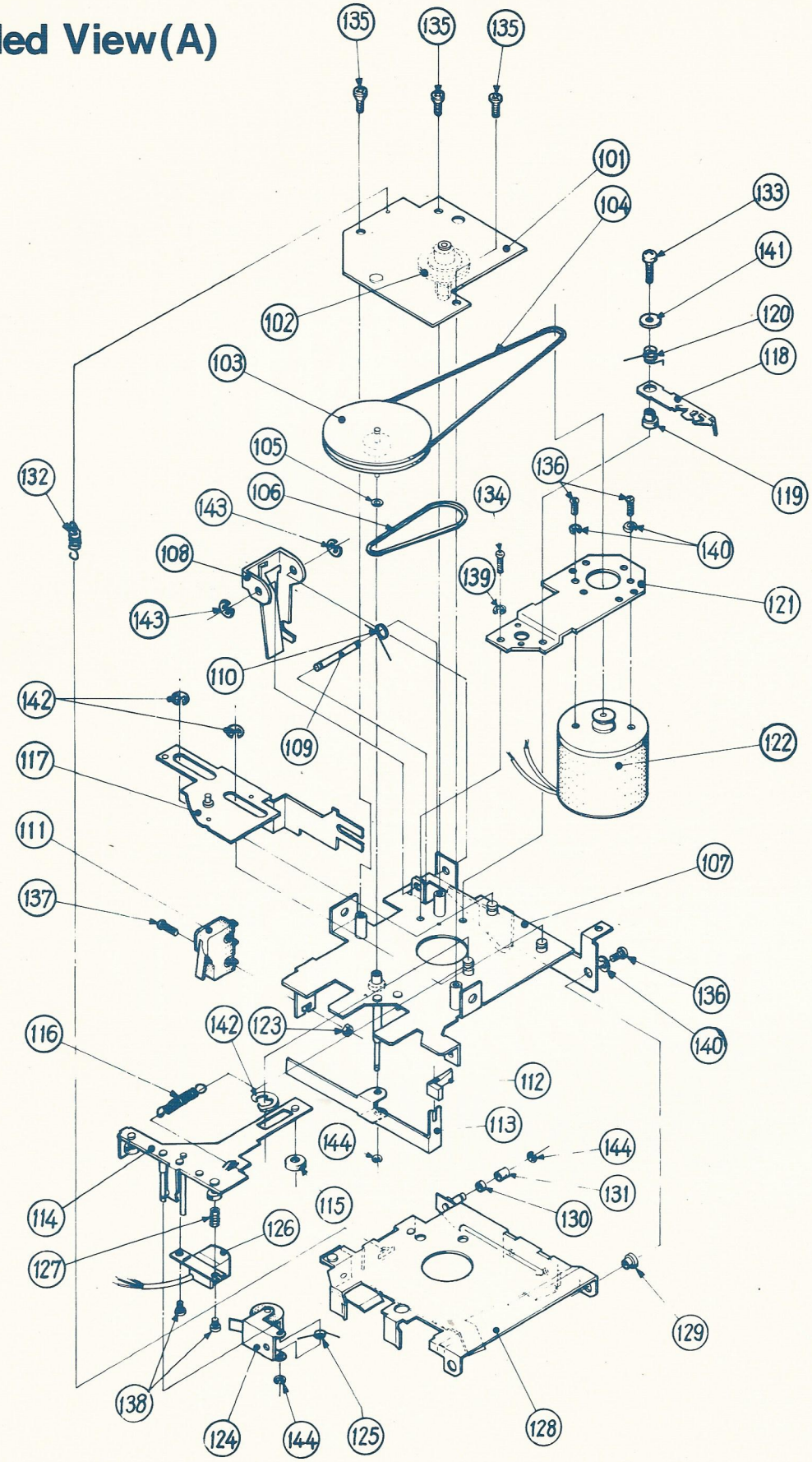

Schematic Diagram

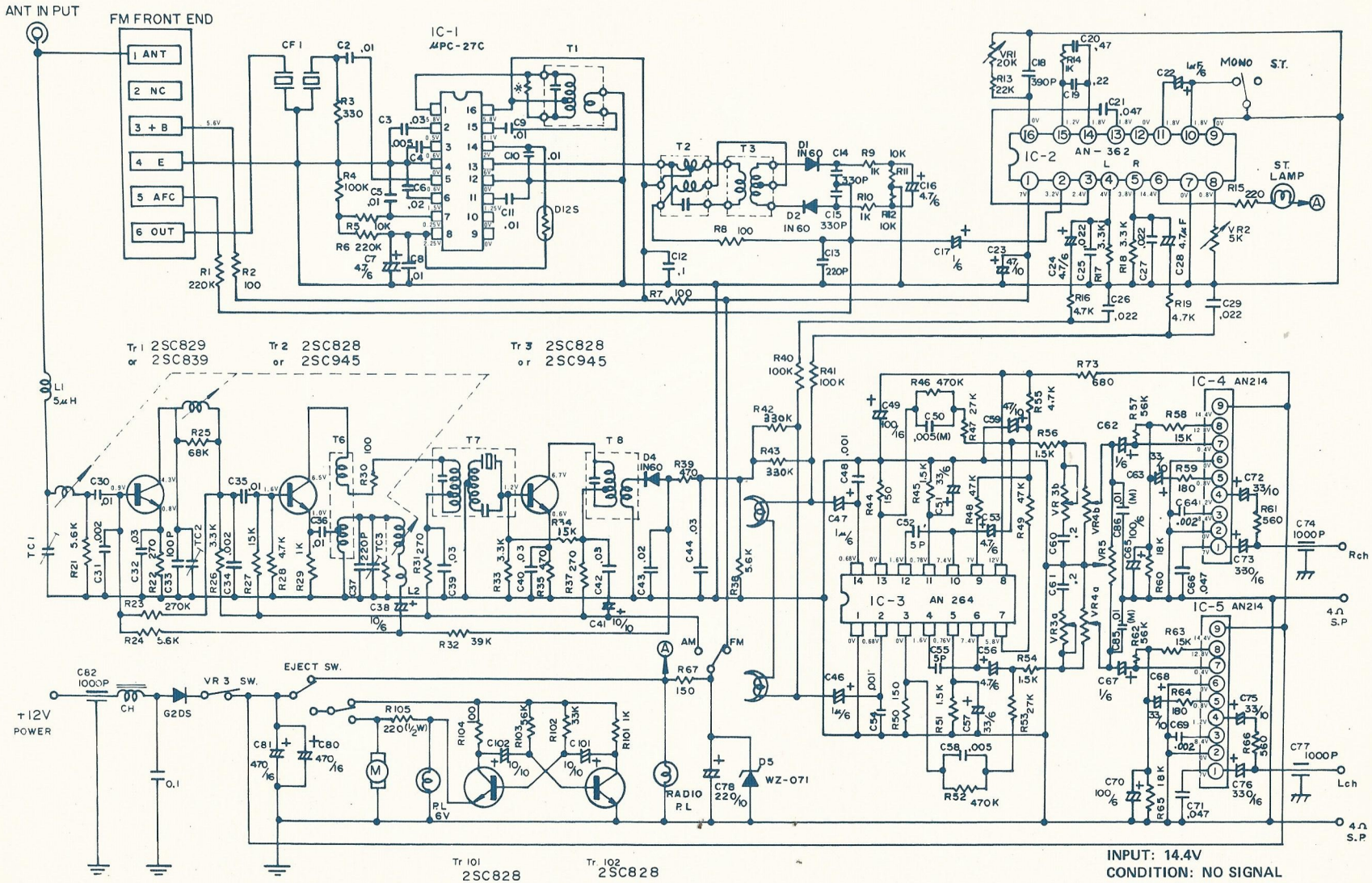

Trouble Shooting

Symptoms	Possible Causes	Remedy
Radio dead. Tape does not move. Lamp does not light.	1. Blown fuse. 2. Poor connection of Black wire to auto frame. 3. Defective switch. 4. Defective choke, transformer.	1. Check Voltage. Replace 2A fuse. 2. Connect black wire solidly to car frame. 3. Replace defective parts.
Tape does not move. Motor does not run.	1. Micro switch (111). 2. Eject switch (51). 3. Motor (122). 4. Power fuse.	Replace Replace Replace Replace
Motor does run.	1. Slippage of dirty belt (104) and pinch roller (124). 2. Belt has slipped off pulleys (104, 106). 3. Motor pulley set screw loosed. 4. Cassette tape defective. 5. Head (126).	Clean Remount Tighten Replace Replace
Lamp lights but no sound, radio or tape, from either channel.	1. Defective Micro-Switch No. 111. 2. Defective IC3 (AN264). 3. Defective VOLUME (9) or poor connection.	1. Replace defective parts. 2. Check poor connections.
Sound from one side only.	1. Defective speaker or connection. 2. Defective IC3 (AN264). 3. Defective IC4 or IC5 (AN214). 4. Defective head (126), or shorted wires. 5. Poor soldering.	1. Replace defective part. 2. Repair poor connections, or short.
Radio normal, but no sound from tape.	1. Defective Micro-Switch No. 111. 2. Defective Motor (122). 3. Defective Head or open connection. 4. Broken belt.	1. Replace defective part. 2. Repair open connection. WZ-071.
Tape speed is too fast.	1. Defective pinch roller (124). 2. Pinch roller spring (125).	Replace Replace
Locking in fast forward is impossible.	1. Locking cam (118). 2. Locking cam spring.	Replace Replace
Excessive wow and flutter.	1. Slippage of belt on flywheel or capstan. 2. Excess or lack of take-up torque. 3. Expansion of belt (104). 4. Motor defective.	Clean Replace Replace Replace
Mechanical noise.	1. Motor defective. 2. Pulley (103) pinch roller (124) or capstan bearing defective.	Replace Lubricate
Cassette can't be loaded normally.	1. Cassette holder (128). Contacts PC. board bracket (3). 2. Eject lever (108) damaged. 3. Cassette tape defective.	Adjust PC. board Bracket position Replace Replace
Cassette does not eject normally.	1. Door (25) deformed. 2. Defective eject lever (108). 3. Cassette tape defective.	Repair Repair Replace

Symptoms	Possible Causes	Remedy
Sound level drops and distortion develops.	1. Dirty or damaged head (126). 2. Head plate out of alignment. 3. Circuits defective. Defective resistors, capacitors or ICs. Disconnected or badly soldered leads. 4. Speaker defective.	Clean or replace See "Tape doesn't run" Check Replace Repair Replace
Tape normal, both AM and FM radio dead.	1. Defective D5 WZ-071. 2. Defective Micro-Switch No. 111. 3. Open antenna connection.	1. Check voltage both sides of D5. 2. Replace defective part. 3. Fix antenna connection.
Ignition noises spoil reception.	1. Electrically noisy ignition system. 2. Poor installation. 3. Poor antenna installation. 4. Defect in receiver.	1. Read instruction sheet for elimination of ignition noise from your own car. 2. Be sure that radio cover is solidly connected electrically to car frame when installing. (If dash board shows a plus potential, use heavy wire to ground car frame). 3. Make firm connection between antenna base and car body. 4. If radio is the cause, replace defective through—capacitors, C74, 77, or 82, or Check for poor soldering. Tighten up through-capacitor bracket screw.
No AM sound.	1. Open circuit at L1 5μF. 2. Shorted antenna trimmer. 3. Defective transistors Tr1, Tr2 or Tr3. 4. Open or shorted AM output connection wire. 5. Defective AM/FM switch. 6. Poor connection of PCB bolt. (90)	1. Fix or replace L1. 2. Replace trimmer (TC1). 3. Replace defective transistor. 4. Fix connection. 5. Replace switch. 6. Tighten up bolt. 7. Check voltage.
Howling occurs on AM.	1. Defective D5 WZ-071. 2. Poor connection.	1. Check voltage. If more than 8V, replace D5 WZ-071. 2. Re-solder.
No FM sound.	1. Defective CF-1. 2. Defective Front End Pack. 3. Defective IC-1 (μPC 27C). 4. Defective IC-2 (AN-271). 5. Defective AM/FM switch (4).	1. Replace defective part. 2. Replace or fix AM/FM switch. 3. Check voltage.
Howling occurs on FM.	1. Defective D5 WZ-071. 2. Poor connection. 3. Poor Solder connection of shield to the topside of Front End Pack.	1. Replace D5 WZ-071 if voltage check shows more than 8V. 2. Fix connection. 3. Resolder shield.

Parts List

REF. NO.	PART NO.	DESCRIPTION	Q'TY
1	A3-0310a	Chassis	1
2	A3-0394	Sub chassis	1
3	A4-0405a	PC. board bracket	2
4	SM-0164	1C-2P switch	2
5	A4-0395	Dial thread bracket	1
6	SM-0343	Tuner (front end)	1
7	SM-0473	Power choke coil	1
8	SM-0445	Flasher print board	1
9	SM-0346	Volume with switch	1
10	A4-0319	Volume washer	2
11	A4-0317	Switch bracket	1
12	A3-0309	Dial back plate A	1
13	A4-0518	Dial thread	1
14	A4-0519	Dial spring	1
15	A4-0430	Dial pointer	1
16	A4-0292	Plastic joint B	1
17	A4-0292	Plastic joint A, C	1
18	A4-0318	Volume bracket	1
19	A4-0327a	Dial back plate B	1
20	SM-0443	Main print board	1
21	SM-0444	AM print board	1
22	SM-0183	Ant. jack	1
23	SM-0345	Balance volume	1
24	A4-0344	Rear plate	1
25	A4-0326	Door	1
26	A4-0105	Door spring	1
27	A4-0520	Door guide	1
28	A4-0356	Lamp holder	1
29	SM-0547	Lamp	2
30	A3-0329	Nose piece	1
31	A4-0322	Eject knob	1
32	A4-0323	AM/FM switch knob	1
33	A4-0324	MPX/Mono switch knob	1
34	A3-0330	Front panel	1
35	A4-0320	Knob (inner)	2
36	A4-0321	Knob (outer)	2
37	A3-0311	Top cover	1
38	A4-0150	Cord holder	1
39	A4-0085	Rear bracket	1
40	M2 x3	Screw	2
41	M3 x6	Screw	2
42	M2.6 x4	Screw	4
43	M3 x8	Screw	3
44	M3 x4	Screw	31
45	M9	Nut	2
46	W9	Washer	2
	M2.6 x4 (B)	Tapping screw	2
	A4-0316a	Through C bracket	1
	1000P	Through capacitor	3
	SM-0502	SP. power cord	1
	IC-2P	Eject switch	1
101	CDK-1900-1	Flywheel holder	1
102	CD8-6100-1	Reel hub ass'y	1
103	CD8-4200-1	Capstan flywheel	1
104	CD8-8210-2	Drive belt	1
105	CD9-6520-1	Nylon washer	1
106	CD8-8220-1	Reel belt	1
107	CDK-1300-1	Main chassis ass'y	1
108	CD2-0810-1	Eject lever	1
109	CD2-4110-1	Eject lever shaft	1
110	CD2-2500-2	Eject lever spring	1

REF NO.	PART NO.	DESCRIPTION	Q'TY
111	MSS-051A	Micro switch	1
113	CDK-5000-1	Senser arm ass'y	1
114	CDK-1700-1	Sliding chassis ass'y	1
115	CD8-4700-1	Roller	1
116	CD2-2100-1	Sliding chassis spring	1
117	CDK-0400-3	Lever	1
118	CD4-0100-1	Locking cam	1
119	CD4-4600-1	Cam spacer	1
120	CD4-2100-1	Cam spring	1
121	CD8-0100-1	Motor chassis	1
122	CD8-8100-1	DC motor	1
124	CDK-4900-1	Pinch roller ass'y	1
125	CD8-2400-1	Pinch roller spring	1
126	CD8-9100-1	Playback head	1
127	S141-A022	Azimuth alignment spring	1
128	CDK-1800-1	Cassette holder ass'y	1
129	CD1-4400-1	Spacer	1
130	CD2-4610-1	Roller	1
131	CD2-4620-1	Roller	1
133	P30-E10F	Screw + P3	1
134	P30-N04F	Screw + P3	1
135	P26-S05F	Screw + 2.6 (flat head)	1
136	P26-N04F	Screw + P2.6	1
137	P20-N10F	Screw + P2	1
138	P20-D06F	Screw + P2	1
139	W30-SOP1	Spring washer	1
140	W26-SOP1	Spring washer W2.6	1
141	W30-WOB2	Flat washer W3	1
142	E30-085S	E ring washer E3	1
143	E20-064S	E ring washer E2	1
144	E15-044S	E ring washer E1.5	1

MAIN PRINT BOARD (FM, MPX, AUDIO AMP.)

201	μPC-27C		IC1	IC	1
202	AN-362		IC2	IC	1
203	AN-264		IC3	IC	1
204	AN-214		IC4, 5	IC	2
205	IN60		D2, 3	Diode	2
206	G2DS			Diode	1
207	D12A		D1	Thermister	1
208	SM-0057		CF-1	10.7 MHz ceramic filter	1
209	SM-0156		T1	FM IFT	1
210	SM-0157		T2	FM IFT	1
211	SM-0158		T3	FM IFT	1
212	390P	50WV	C18	Poristirol capacitor	1
213	0.22μF	6WV	C19	Tantal E capacitor	1
214	0.47μF	6WV	C20	Tantal E capacitor	1
215	5PF	25WV	C52, 55	Ceramic capacitor	2
216	220PF	25WV	C13	Ceramic capacitor	1
217	330PF	25WV	C14, 15	Ceramic capacitor	2
218	0.005μF	25WV	C4	Ceramic capacitor	1
219	0.01μF	25WV	C2,5,8,9,10,11	Ceramic capacitor	6
220	0.02μF	25WV	C6, 43	Ceramic capacitor	2
221	0.03μF	25WV	C3	Ceramic capacitor	1
222	0.1μF	25WV	C12	Ceramic capacitor	1
223	0.2μF	25WV	C66, 71	Ceramic capacitor	2
224	0.001μF	50WV	C48, 54	Myler capacitor	2
225	0.002μF	50WV	C64, 69	Myler capacitor	2
226	0.005μF	50WV	C50, 58	Myler capacitor	2
227	0.01μF	50WV	C84, 85	Myler capacitor	2
228	0.03μF	50WV	C69, 71a	Myler capacitor	2

REF. NO.	PART NO.	SYMBOL NO.	DESCRIPTION	Q'TY
229	0.05μF 50WV	C21	Myler capacitor	1
230	0.02μF 50WV	C25, 26, 27, 29	Myler capacitor	4
231	1μF 6WV	C17,22,46,47,62,67	Electric capacitor	6
232	4.7μF 6WV	C7,16,24,28,53,56	Electric capacitor	6
233	100μF 10WV	C49, 65, 70	Electric capacitor	3
234	33μF 16WV	C51,57,63,68,72,75	Electric capacitor	6
235	47μF 16WV	C59, 23	Electric capacitor	2
236	330μF 16WV	C73, 76	Electric capacitor	2
237	470μF 16WV	C80, 81	Electric capacitor	2
238	½W 220Ω	R15	Carbon resistor	1
239	¼W 100Ω	R2, 7, 8	Carbon resistor	3
240	¼W 150Ω	R44, 50, 67	Carbon resistor	3
241	¼W 180Ω	R59, 64	Carbon resistor	2
242	¼W 330Ω	R3	Carbon resistor	1
243	¼W 560Ω	R61, 66	Carbon resistor	2
244	¼W 680Ω	R73	Carbon resistor	1
245	¼W 1K	R9, 10, 14	Carbon resistor	3
246	¼W 1.5K	R45, 51, 54, 56	Carbon resistor	4
247	¼W 2.7K	R45, 51, 54, 56	Carbon resistor	1
248	¼W 3.3K	R17, 18	Carbon resistor	2
249	¼W 4.7K	R16, 19, 55	Carbon resistor	3
250	¼W 10K	R5, 11, 12	Carbon resistor	3
251	¼W 15K	R58, 63	Carbon resistor	2
252	¼W 18K	R60, 65	Carbon resistor	2
253	¼W 22K	R13	Carbon resistor	1
254	¼W 27K	R47, 53	Carbon resistor	2
255	¼W 47K	R48, 49	Carbon resistor	2
256	¼W 56K	R57, 62	Carbon resistor	2
257	¼W 100K	R4, 40, 41	Carbon resistor	3
258	¼W 220K	R1, 6	Carbon resistor	2
259	¼W 330K	R42, 43	Carbon resistor	2
260	¼W 470K	R46, 52	Carbon resistor	2
261	5KΩ B	VR1	Semi-fixed volume	1
262	20KΩ B	VR2	Semi-fixed volume	1

REF. NO.	PART NO.	SYMBOL NO.	DESCRIPTION	Q'TY
AM PRINT BOARD (AM SECTION)				
301	2SC829	Tr1	Transistor	1
302	2SC828	Tr2, 3	Transistor	2
303	1N60	D1	Diode	1
304	SM-0191	L2	RF choke coil	1
305	SM-046	T6	OSC transformer	1
306	SM-047	T7	455 kHz ceramic filter	1
307	SM-048	T8	455kHz machining trans.	1
308	0.01μF 25WV	C30, 35, 36	Ceramic capacitor	3
309	0.02μF 25WV	C43	Ceramic capacitor	1
310	0.03μF 50WV	C12,39,40,42,44	Myler capacitor	5
311	10μF 6WV	C38, 41	Electric capacitor	2
312	1/8W 100Ω	R30	Carbon resistor	1
313	1/8W 270Ω	R22, 31, 37	Carbon resistor	3
314	1/8W 470Ω	R35, 39	Carbon resistor	2
315	1/8W 1KΩ	R29	Carbon resistor	1
316	1/8W 3.3KΩ	R26, 33	Carbon resistor	2
317	1/8W 4.7KΩ	R28	Carbon resistor	1
318	1/8W 5.6KΩ	R21, 24, 38	Carbon resistor	3
319	1/8W 15KΩ	R27, R34	Carbon resistor	2
320	1/8W 27KΩ	R27, R34	Carbon resistor	1
321	1/8W 39KΩ	R32	Carbon resistor	1
322	1/8W 68KΩ	R25	Carbon resistor	1
323	1/8W 150KΩ	R23	Carbon resistor	1
FLASHER PRINT BOARD				
351	2SC828	Tr4, 5	Transistor	2
352	WZ-071	D5	Diode	1
353	10μF 6μF	C101, 102	Electric capacitor	2
354	220μF 10WV	C78	Electric capacitor	1
355	½W 220Ω	R105	Carbon resistor	1
356	¼W 180Ω	R104	Carbon resistor	1
357	¼W 1KΩ	R101	Carbon resistor	1
358	¼W 33KΩ	R102	Carbon resistor	1
359	¼W 56KΩ	R103	Carbon resistor	1

Exploded View (B)

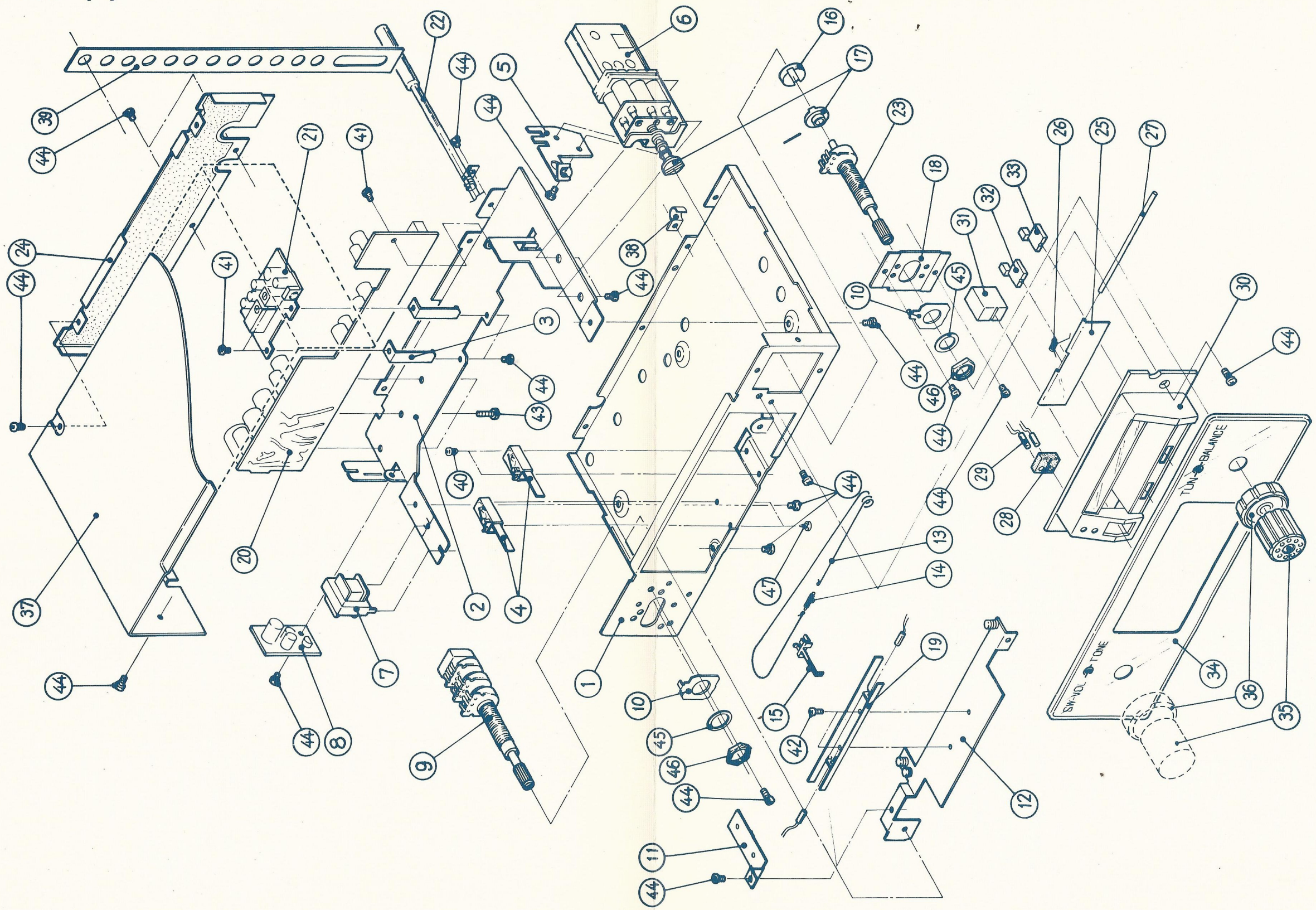

Wiring Connections