INSTANT STOP (Refer to Fig. 6)

When "CUE" push button is depressed, Pinch Roller is disengaged from capstan stopping tape motion.
Simultaneously, Rewind Brake Assembly engages Supply Table to keep tape taut. When button is released unit is returned to original mode.

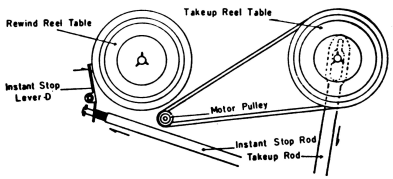

Fig 6

STOP

When "STOP" push button is depressed previously engaged push button is instantly released. Brakes will stop both reel tables.

MECHANISM ADJUSTMENTS

1. PINCH ROLLER ADJUSTMENT (Refer to Fig. 7)

Shaft of Pinch Roller must be parallel to shaft of Capstan. proper pressure between Pinch Roller and Capstan is about 1~1.5 kgs (2.2~3.4 pounds). The pressure can be adjusted by turning the Pinch Roller pressure adjustment nut clockwise.

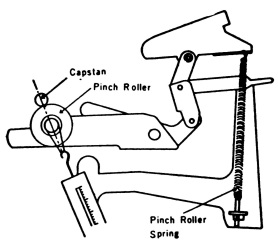

Fig. 7

2. IDLER ADJUSTMENT (Refer to Fig. 8)

Idler Wheel Shaft must be parallel to Motor and Capstan Shaft. Entire edge of Idler must contact respectiv speed steps on Motor Pulley.
Proper pressure is about 200~300 gs (7 oz. to 10 oz.) at 1-7/8 ips position. Pressure can be changed by adjustiing the Idler Spring.

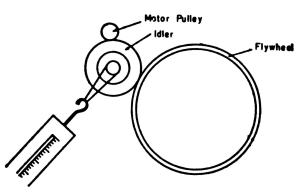

Fig. 8

3. TAKEUP AND REWIND TORQUE MEASUREMENTS (Refer to Fig. 9)

A. Playback Torque:
   a. Place an 7inch tape reel on the Takeup Table and hang the end of the tape on a Tension Gauge as shown below and depress the PLAY button.
   b. Proper tension is between 15~45 gs (2 and 5 in-oz.)
   c. If tension is not within above range adjust as follows :
      i. Clean oil and dust from all drive points to eliminate slippage. Especially check coupling felt between Takeup Table and Takeup Table Pulley.
      ii If coupling felt between Takeup Table and Takeup Table Pulley is worn, replace either Takeup Table or Takeup Toble Pulley.

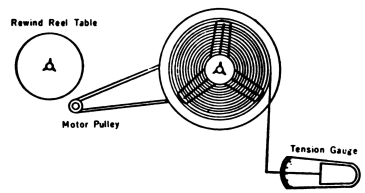

Fig. 9

B. Fast Forward Torque :
   a. Place a 7 inch tape reel on the takeup table and hang the end of the tape on a Tension Gauge as shown above and depress "FAST FORWARD" button
   b. Tension should be greater than 100 gs (11 in-oz.)
   c. If tension is less than 100 gs (11 in-oz.) adjust as follows:
      i. Clean oil and dust from all drive points to eliminate slippage.
      ii. Adjust Fast Forward Spring by turning adjusting screw clockwise to give sufficient torque or replace with new one, If spring tension is insufficient.

C. Rewind Torque :
   a. Place an 7 inch tape reel on Supply Table and hang the Tension Gauge to end of tape, depress REWIND button.
   b. Tension should be greater than 100 gs (11 in-oz.)
   c. If tension is less than 100 gs (11 in-oz.) adjust as follows :
      i. Clean oil and dust from all drive points to eliminate slippage.
      ii. If torque is still insufficient, replace Rewind Spring.

4. PRESSURE PAD ADJUSTMENTS (Refer to Fig. 10)

A. Pressures of pressure pads should be from about 25~35 gs (0.9 to 1.2 oz.) for record and playback heads and, from about (10~20) gs (0.4 to 0.7 oz.) for erase head.
B. If pressures are not within above ranges, adjust as follows :
   a. Replace felt if felt is worn.
   b. If spring tension is insufficient, replace with new Spring.

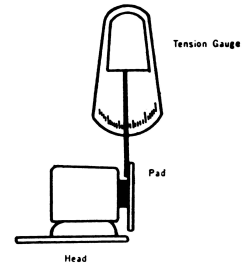

Fig' 10

5. HEAD ADJUSTMENTS (Refer to Fig. 11)

A. Position Adjustments :
Adjust levels of head retaining screws so that tape during "RECORD" or "PLAY" modes will be positioned in relationship to the heads as in diagram below. For quick, check, lift pressure pad assemblies with fingers and note position of tape in relationship to head.

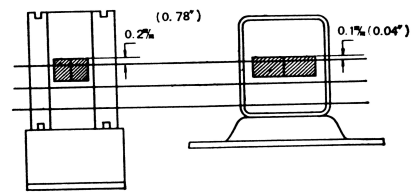

Fig. 11

B. Azimuth Adjustment :
   a. Play/Record head adjustment:
      Thread standard alignment tape on therecorder. While playing back the head azimuth adjustment part, adjust the screws of the head mounting plate for the proper position which will give maximum output.
      The Mounting screws must be fixed thereafter.

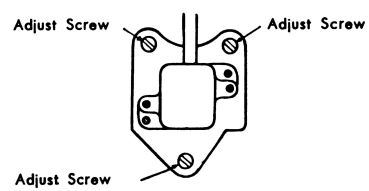

Fig. 12

   b. Erase head adjustment :
      After completion of the above adjustment, record a 450 cps tone on the completely erased tape and erase the recorded portion with erase current of 30mA to 40mA and playback.
      Adjust the height of erase head so that no recorded signal can be heard through speaker.

DISASSEMBLY INSTRUCTIONS

A. HOW TO REMOVE PANEL AND PLASTIC CONSOLE :
   a. Remove Head Cover ② by pulling up both ends.
   b. Remove Plastic Console by the following procedures:
      1. Remove control knobs ① by Pulling up.
      2. Remove 2 screws ③ holdiug the Plastic Console.
      3. Lift the Console with care.
   c. Remove 4 screws ④ holding panel to the chassis.
   d. Lift the panel with care.

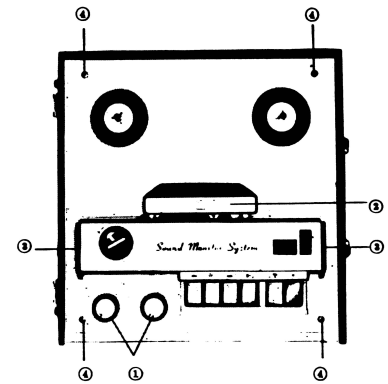

Fig. 13

B. HOW TO REMOVE TRANSPORT & AMPLIFIER ASSEMBLY FROM CABINET :
   a. Remove 4 screws ⑤ holding the assembly to the Cabinet.
   b. Remove 4 washers ⑥ out from the nuts.
   c. Lift the assembly with care.

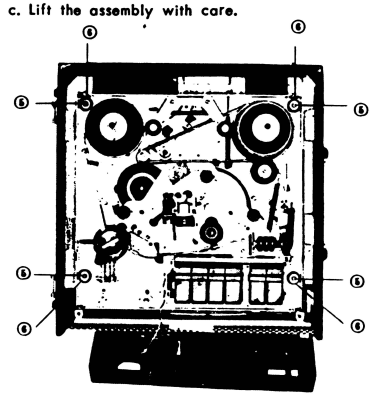

Fig. 14

C. HOW TO REMOVE MOTOR FROM CHASSIS :
   a. Remove the rubber belt from the motor pulley.
   b. Remove the motor pulley from motor shaft, by loosening the screw holding the motor pulley to the motor shaft.
   c. Remove two lead wires of the motor with soldering iron.
   d. Remove the nuts holding the motor mounting board to the chassis.

PARTS LIST

RESISTORS

Ref. No.	Parts No.	Description
R 1	ERD14LZK223	Carbon Film Resistor
R 2	ERD14LZK223	〃 〃 〃
R 3	ERD14LZK684	〃 〃 〃
R 4	ERD14LZK225	〃 〃 〃
R 5	ERD14LZK103	〃 〃 〃
R 6	ERD14LZK105	〃 〃 〃
R 7	ERD14LZK224	〃 〃 〃
R 8	ERD14LZK333	〃 〃 〃
R 9	ERD14LZK474	〃 〃 〃
R 10	ERD14LZK152	〃 〃 〃
R 11	ERD14LZK471	〃 〃 〃
R 12	ERD14LZK105	〃 〃 〃
R 13	ERD14LZK224	〃 〃 〃
R 15	ERD14LZK333	〃 〃 〃
R 16	ERD14LZK333	〃 〃 〃
R 17	ERD14K390KΩ	〃 〃 〃
R 18	ERD14LZK472	〃 〃 〃
R 19	ERD14LZK474	〃 〃 〃
R 20	ERD14LZK474	〃 〃 〃
R 21	ERD14LZK221	〃 〃 〃
R 22	ERD34LZK221	〃 〃 〃
R 23	ERD12BK332	〃 〃 〃
R 24	ERD12LZK470	〃 〃 〃
R 25	ERD14LZK103	〃 〃 〃
R 26	ERD1LZK8R0	〃 〃 〃
R 27	ERD14LZK102	〃 〃 〃
R 28	ERD14LZK391	〃 〃 〃
R 29	ERD14LZK474	〃 〃 〃

VARIABLE RESISTORS

VR 1	EVC-A4QL50AF5	Variable Resistor 250KΩ(A) (Volume Control)
VR 2	EVC-A4CL50AF5	〃 〃 250KΩ(A) (Tone Control)

CAPACITORS

C 1	TNP-090J	Titanium Capacitor
C 2	ECQ-M05473MZ	Polyster Capacitor
C 3	ECH-R2104M	MP Tubular Capacitor
C 4	ECQ-S2472KZ	Styrol Capacitor
C 5	ECN-R4502X	Paper Tubular Capacitor
C 6	ECH-R2104M	MP Tubular Capacitor
C 7	ECN-R4103M	Paper Tubular Capacitor
C 8	ECN-R4103M	〃 〃
C 9	ECE-C250V20	Electrolytic Capacitor
C 10	ECQ-M05472MZ	Polyster Capacitor
C 11	ECQ-M05103MZ	〃 〃
C 12	ECQ-M05223MZ	〃 〃
C 13	ECQ-M05473MZ	〃 〃
C 14	ECH-R2104M	MP Tubular Capacitor
C 15	ECE-A3V30	Electrolytic Capacitor
C 16	ECN-R4103M	Paper Tubular Capacitor
C 17	ECQ-S1471KZ	Styrol Capacitor
C 18	ECQ-S1471KZ	〃 〃
C 19	QCD-10004	FM Mica Capacitor
C 20,22,24	ECE-E250VBX1Z	Brock Electrolytic Capcitor
C 23	ECH-R2104M	MP Tubular Capacitor
C 25	ECH-R2104M	〃 〃 〃
C 26	ECN-R4502X	Paper Tubular Capacitor
C 27	RMP-250/2/p65	
C 28	ECQ-S1152K	Styrol Capacitor

ERECTRICAL PARTS

E 1	QWY-1U	Record/Playback Head
E 2	QWY-200Z	Erasure Head
E 3	QLB-113	Oscillator Coil
E 4	EAS-15D28SG	Speaker
E 5	QSL-8	V.U Meter
E 6	QJI-16	Printed Circuit Board
E 7	QJA-201	Microphone Jack
E 8	QJA-102	Radio, Ext.S.P Jack
E 9	QJS-704	9-pig Molded Socket
E 10	QJS-705	9-pin Molded Socket-B
E 11	QJS-712	7-pin Molded Socket-F
E 12	QTF-1002	2 P Fuse Holder
E 13	QJF-1001	Fuse 0.5A
E 14	QJF-1002	Fuse 1.2A
E 15	QJS-101	Pilot Lamp Socket
E 16	QVL-101	Pilot Lamp
E 17	QTV-1016	Pilot Cover
E 18	QTV-1015	MT Shielding Case-B
E 19	QTV-1002	MT Spring-B
E 20	QTT1124	Printed Circuit Board Holding Angle-A
E 21	QTT-1125	〃 〃 〃 -B
E 22	QTT-1011	Jacks Angle
E 23	QTT-1126	Shielding Angle
E 24	QBT-1031	Slide Switch Spring
E 25	QTS-1023	Jacks Shielding Plate
E 26	QTS-1037	Printed Circuit Shielding Plate
E 27	QLP-370	Power Transformer
E 28	QLA-308	Output Transformer

S 1	Slide Switch (record/play selector)
S 3	Stop Switch
S 5	Leaf Switch (equalization 3-3/4 ips.)
S 6,7	Leaf Switch (equalization 1.7/8 ips.)
S 8,9	AC Voltage Selector

MECHANISM PARTS

M 3	Pole-A for Sub-baseplate
M 4	〃 -B 〃 〃 〃
M 13	Tape Guide Screw
M 14	Tape Guide
M 15	〃 〃 Washer
M 23	Flywheel
M 24	〃 Bearing
M 25A	〃 〃 Retainer
M 26	Capstan Oil Cap
M 29	Capstan C-Washer
M 31	Speed Selector Safety Bracket
M 33	Drive Idler
M 34	〃 〃 Shaft
M 35	〃 〃 Arm
M 36	〃 〃 〃 Pin
M 37A	〃 〃 Lever-B
M 38	〃 〃 Arm Spacer
M 39	〃 〃 Lever-B Spring-A
M 40	〃 〃 Lever Shaft Assembly
M 41B	〃 〃 Lever-A
M 42	〃 〃 〃 Spring
M 44	〃 〃 Lever-B Spring-B
M 45	Pinch Roller Holder Assembly
M 46	〃 〃 Lever-A
M 47	〃 〃 〃 -B
M 49	〃 〃 Holder Washer-A
M 51	〃 〃 〃 -C
M 52	Pinch Roller
M 53	〃 〃 Felt
M 54	〃 〃 Holding Screw
M 55	〃 〃 Shaft
M 76	Counter Pulley
M 77	〃 Belt
M 78	〃 Shaft Bearing
M 80A	Brake Holding Bracket
M 81A	Rewind Brake Roller Assembly
M 82A	Takeup Brake Roller Assembly
M 83	Rewind Brake Arm Shaft
M 85	Brake Spring
M 86A	Brake Rod
M 87	Rewind Brake Arm
M 88	Takeup Brake Arm
M 90A	Rewind Tension Arm
M 91	〃 〃 Shaft
M 92	〃 Pulley
M 93	〃 〃 Shaft
M 96	〃 Rod
M 97	〃 〃 Bracket
M 98	〃 〃 Spring-A
M 99	〃 〃 〃 -B
M 100	Brake Rod Spring
M 101	Rod Washer
M 104A	Fast Forward Lever Shaft
M 105	〃 〃 〃 Spring
M 106	Pinch Roller Sping
M 108	Fast Forward Rod
M 109	〃 〃 〃 Spring
M 110A	Instant Stop Lever-A Assembly
M 111A	〃 〃 〃 -B
M 116	Counter
M 117A	〃 Holding Bracket
M 118	〃 Spring Joint
M 119	〃 〃 〃 Screw
M 128	Belt
M 129A	Push Button Frame
M 130	〃 〃 Lever-A
M 132	〃 〃 〃 Bracket
M 133	〃 〃 Shaft
M 134	Vinyl Pipe-A for Push Button Shaft
M 135	〃 〃 -B 〃 〃 〃 〃
M 136	Push Button Lever-A Spring
M 137	〃 〃 〃 -B 〃
M 142	〃 〃 Leaf Spring
M 148	Base Plate Rubber Cushion
M 149	〃 〃 〃 〃 Spacer
M 150	〃 〃 〃 〃 Washer
M 151	Head Adjustment Spring
M 152	Flywheel Thrust Steel Ball
M 193	Record/playback Head Mounting Plate
M 194	〃 〃 〃 〃 〃 Spacer
M 196A	Tape Guide Plate
M 199	Speed Selector Spring
M 200	Metal Hook for Drive Idler Spring
M 201	Drive Idler Lever Shaft Cap
M 208	Motor Mounting Board Rubber Cushion
M 209	Washer for above
M 210	Mounting Screw for above
M 211A	Motor Mounting Board
M 212	Vinyl Pipe for Push Button Lever Spring-A
M 213	Rewind/Fast Forward Button Assembly
M 214	Stop Button Assembly
M 216	Record/Playback Button Assembly
M 218	Lever Bracket
M 219	Limitre
M 221	Pinch Roller Spring Holder Post
M 222	Tape Pad Spring
M 224	Idler Felt
M 225	Fast Forward Roller Shaft
M 226	Fast Forward Roller
M 228	Takeup Table Pulley Retainer
M 229	Vinyl Pipe for above
M 235	Table Bearing Retainer
M 236	Table Bearing
M 237	Vinyl Pipe for Rewind Tension Lever
M 238	Instanr Stop Button
M 239	Rewind Reel Table Friction Disc
M 244	Instant Stop Lever Spring
M 245	Tape Counter Pulley-A

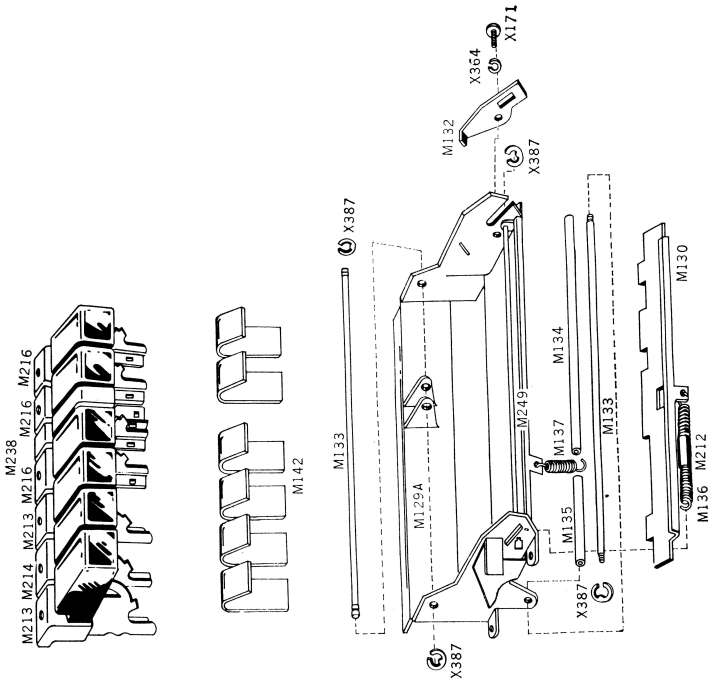

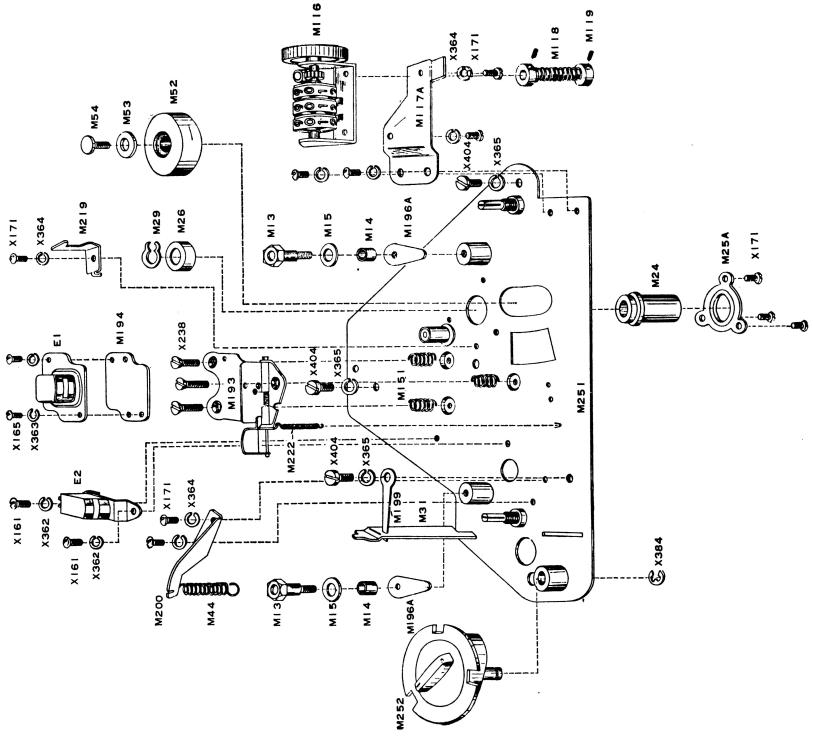

TROUBLE SHOOTING GUIDE

1. NO PLAYBACK OR RECORD

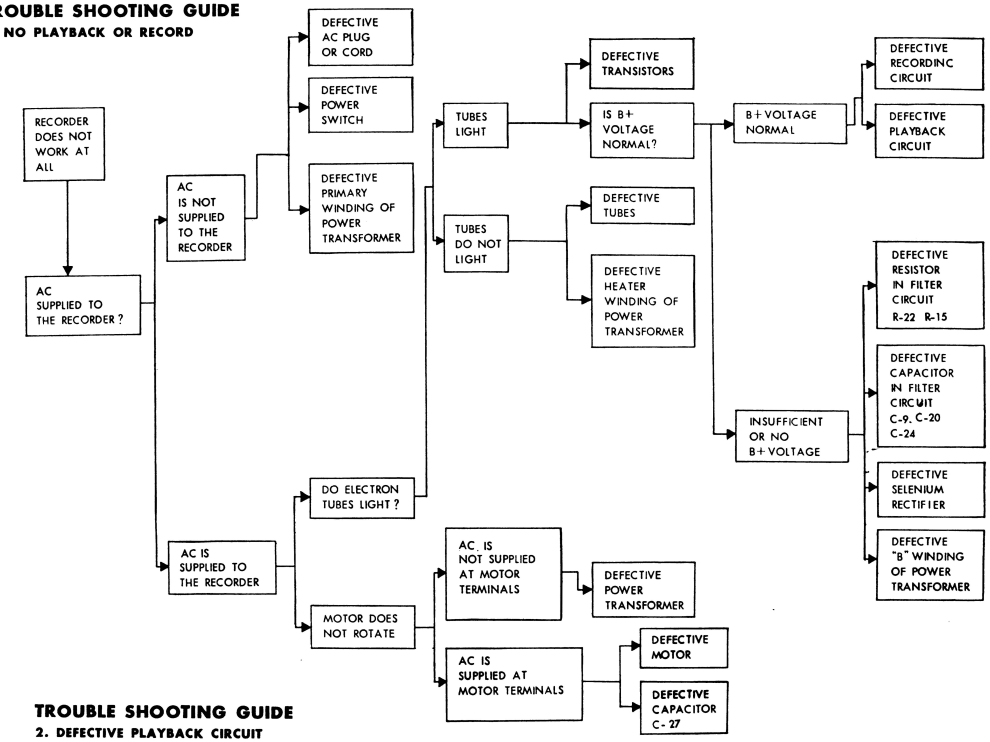

TROUBLE SHOOTING GUIDE

2. DEFECTIVE PLAYBACK CIRCUIT

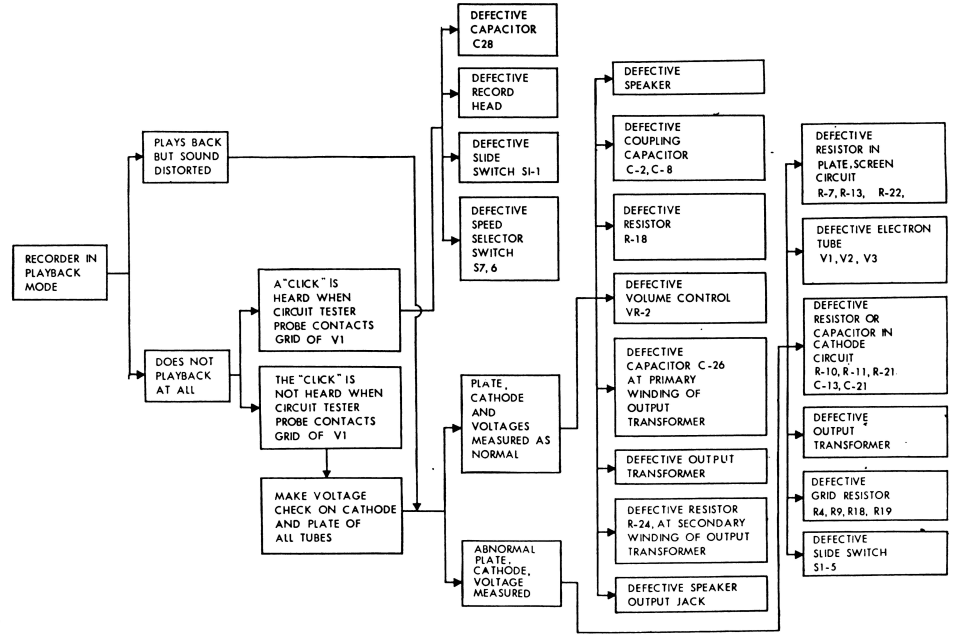

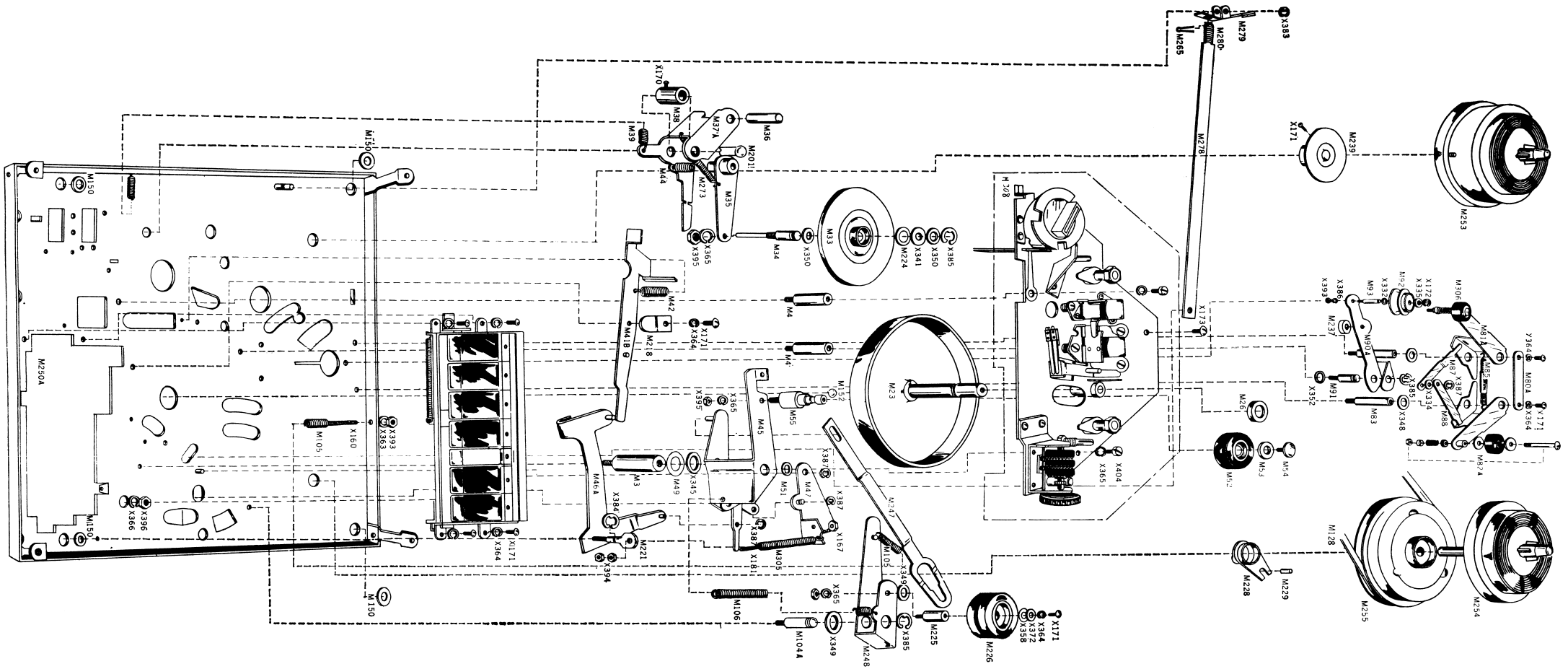
X383
M279
M280
M265
X170
M38
M39
M37A
M36
M201
M44
M273
M35
M150
M150
M150
M250A
M150
M150
M278
X171
M239
M253
M308
X173
M33
M34
X350
X385
X350
X341
M224
X365
X395
M42
M4
M4
M218
X171
X364
M41B
M23
M152
M55
X365
X395
M45
M3
M49
X345
M46A
X384
M221
X394
X387
M47
X387
M51
X386
M305
X167
X181
M247
M105
X349
X385
M248
M225
M106
M104A
X349
X365
X160
M105
X393
X363
X396
X366
X171
X364
M26
M54
M53
M52
X404
X365
X386
X393
M237
M93
X332
M92
X335
X172
M306
M904
M91
X352
M83
X385
X334
X348
M87
X387
M88
M814
M85
M874
X361
M804
X171
X364
M128
M228
M229
M255
M254
X171
X364
X372
X358
M226

CIRCUIT DIAGRAM

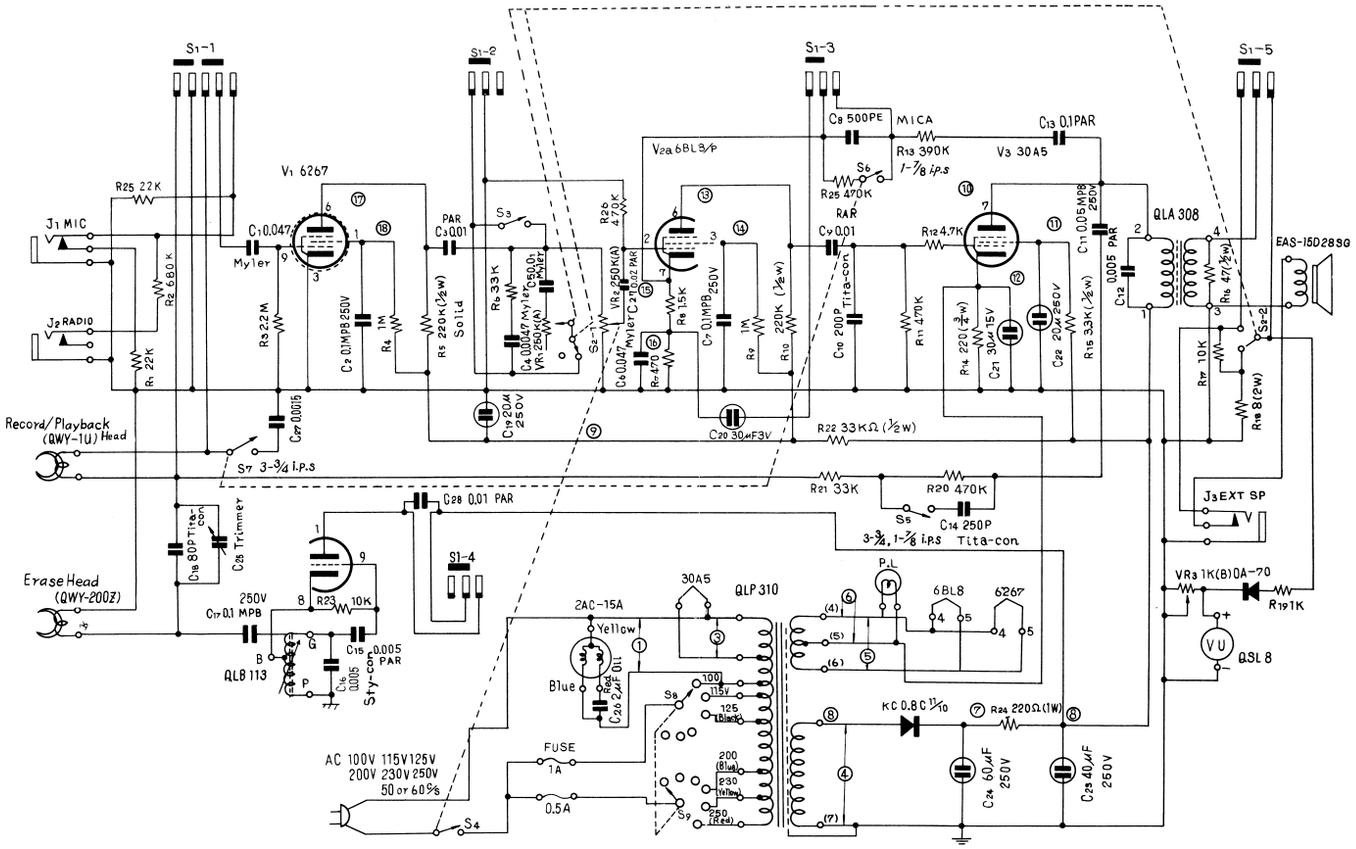

NOTE:

1. S1 Record/Play Selector Switch (shown in play position)
2. S2 Monitor Selector Switch (coupled with VR1)
3. S3 Stop Switch
4. S4 AC ON/OFF Switch (coupled with VR2)
5. S5, 6, 7 Speed Selector Switch (shown in 7-1/2 ips. position)
6. S8, 9 AC Voltage Selector Switch
7. All Resistance in Ω, K=1,000 Ω, M=1,000,000, Ω
8. All Capacitance in Microfarads PF=Micro-microfarads.

THIS SCHEMATIC DIAGRAM IS TO BE APPLIED FOR THE RO-703S FROM SERIAL NOMBER (9204)

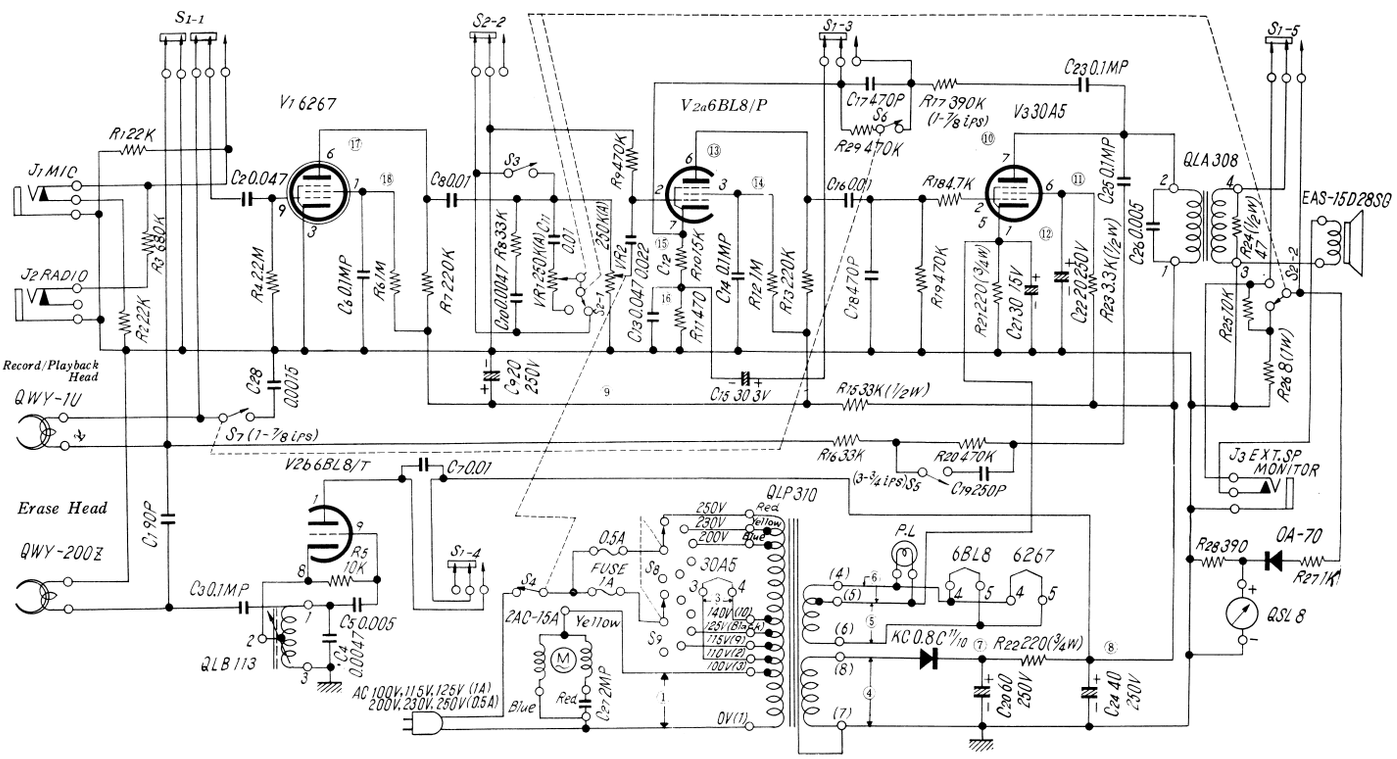

NOTE:

1. S1 Record/Play Selector Switch (shown in play position)
2. S2 Monitor Selector Switch (coupled with VR1)
3. S3 Stop Switch
4. S4 AC ON/OFF Switch (coupled with VR2)
5. S5,6,7 Speed Selector Switch (shown in 7-1/2 ips. position)
6. S8,9 AC Voltage Selector Switch
7. All Resistance in Ω, K=1,000Ω, M=1,000,000,Ω
8. All Capacitance in Microfarads PF=Micro-microfarads.

NATIONAL MODEL RQ-703S N24-9.

N24-10. NATIONAL MODEL RQ-703S

Printed Circuit Board (are mounted on the reverse side)

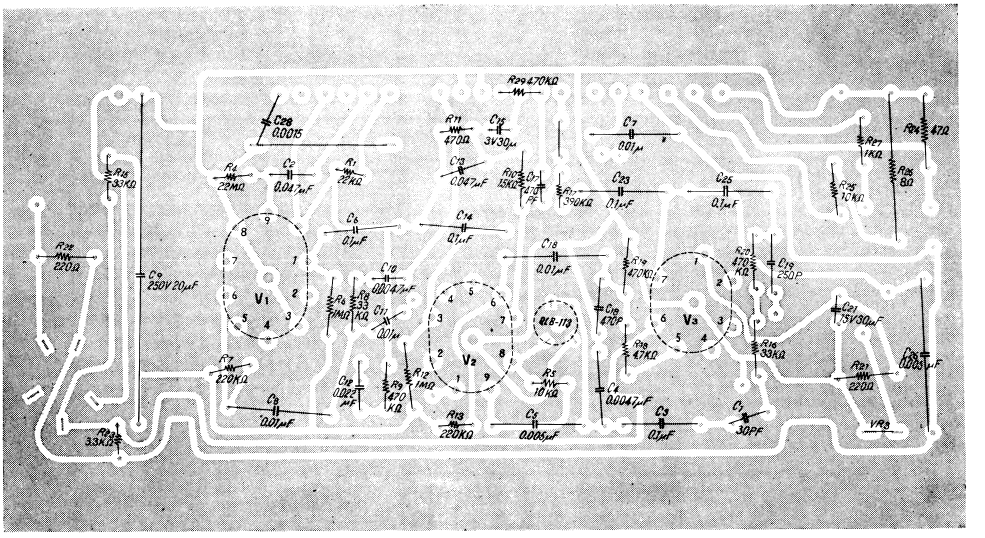

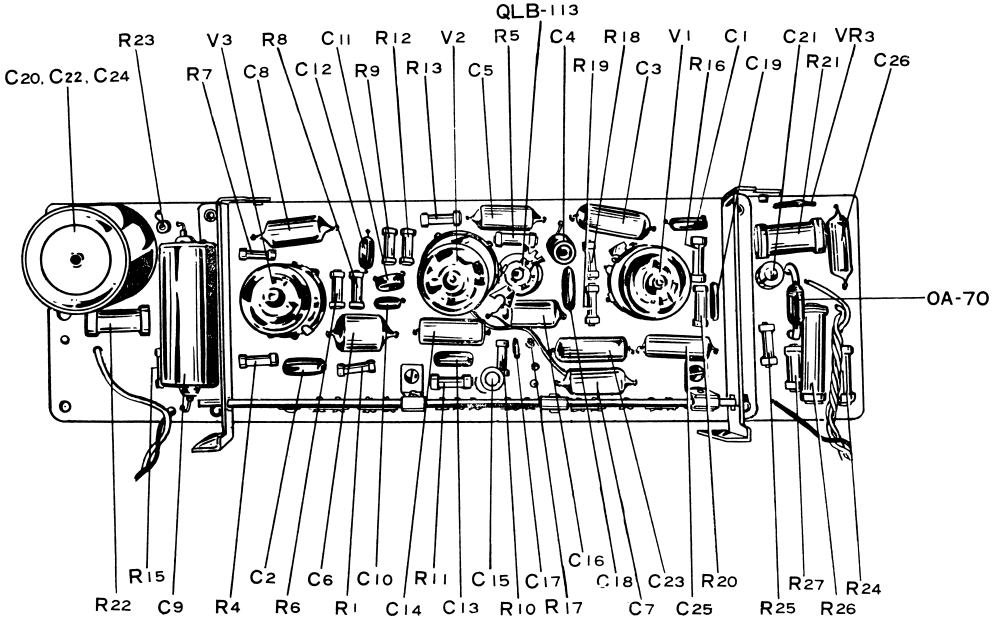

TROUBLE SHOOTING GUIDE
3. DEFECTIVE RECORDING CIRCUIT

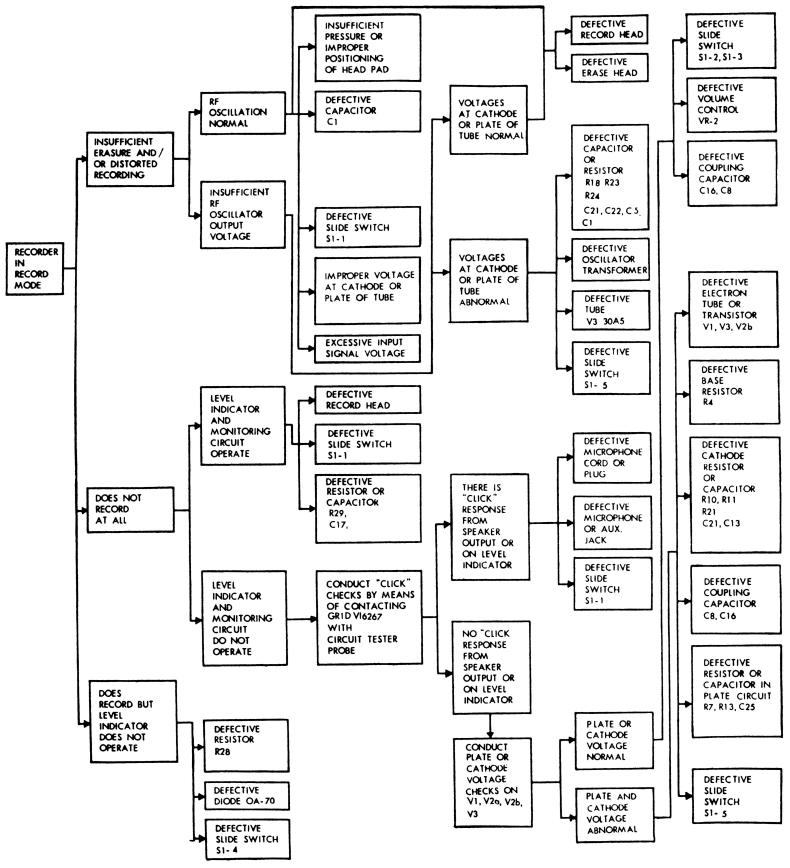

TROUBLE SHOOTING GUIDE
4. MALFUNCTIONS IN PLAY/RECORD MOTION

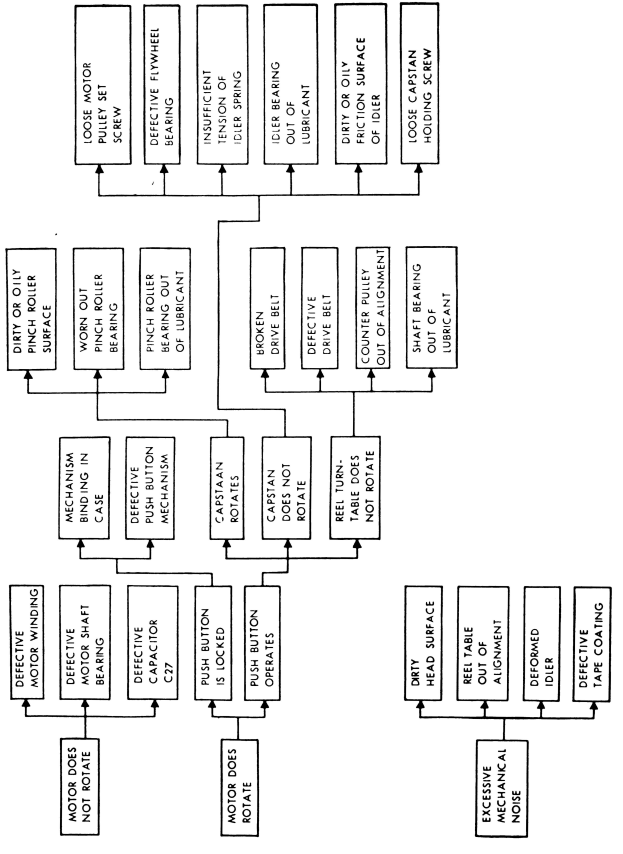

TROUBLE SHOOTING GUIDE
5. MALFUNCTIONS IN FAST FORWARD/REWIND MOTION

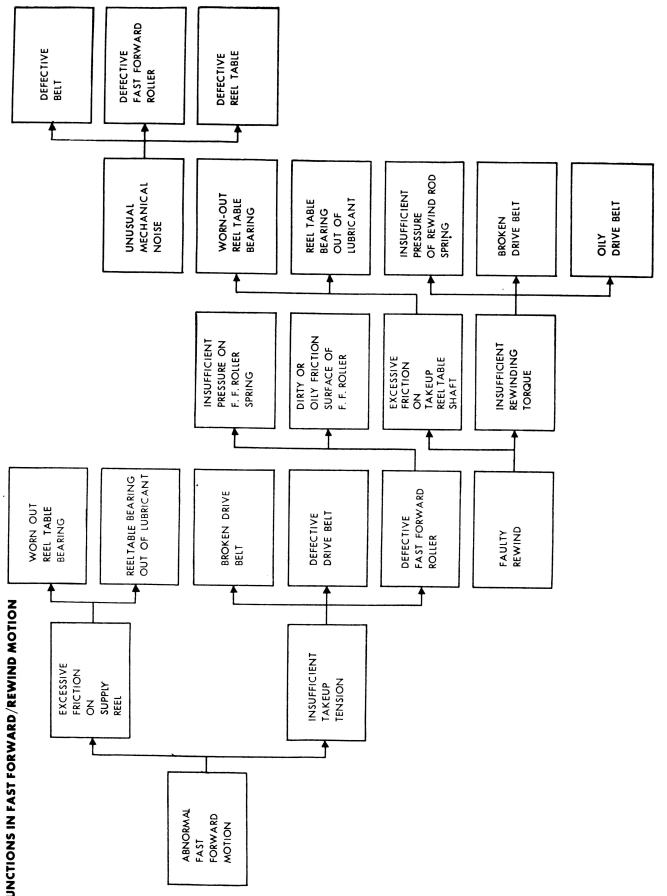

N24-6. NATIONAL MODEL RQ-703S

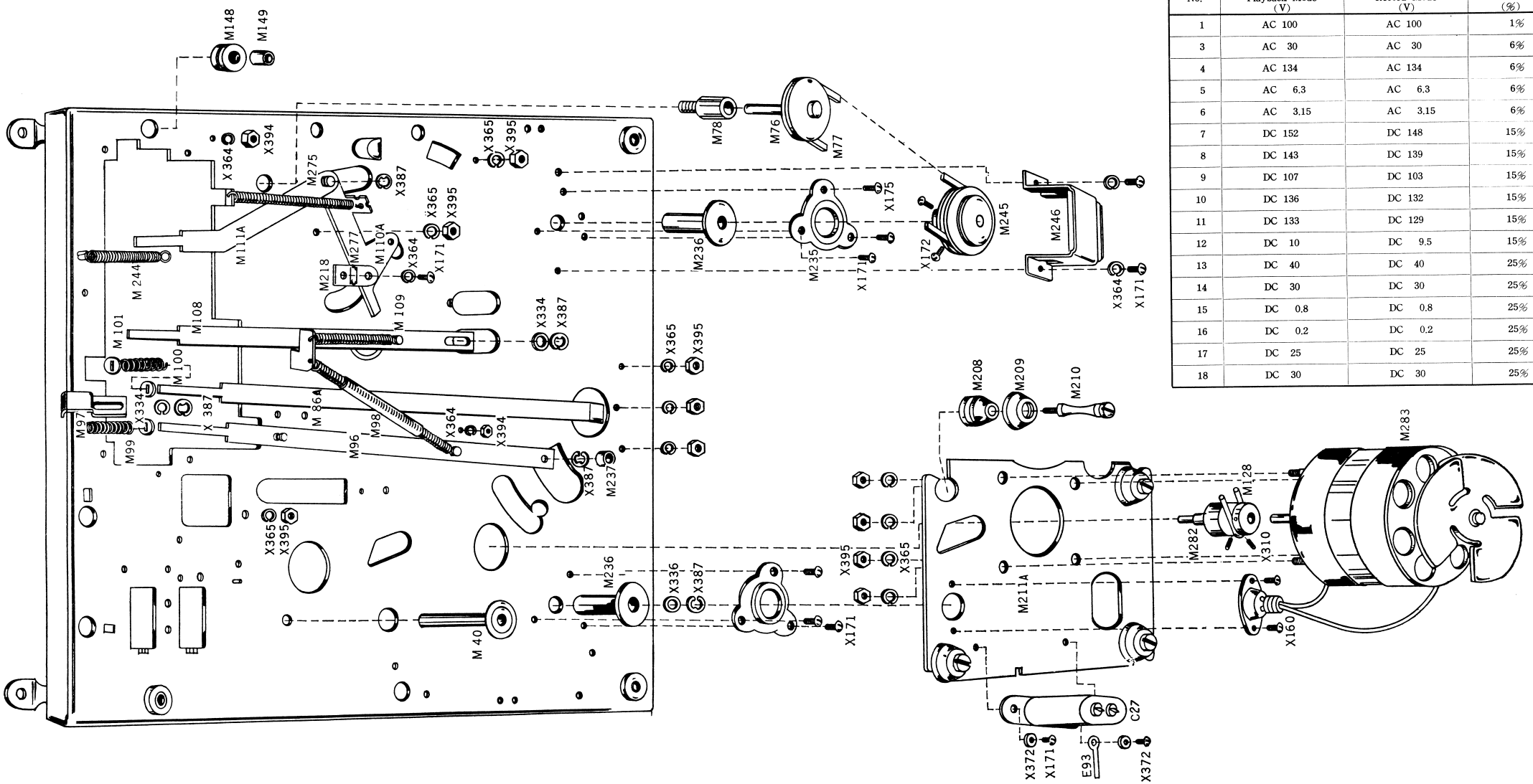

VOLTAGE CHART

No.	Playback Mode (V)	Record Mode (V)	Telerance (%)
1	AC 100	AC 100	1%
3	AC 30	AC 30	6%
4	AC 134	AC 134	6%
5	AC 6.3	AC 6.3	6%
6	AC 3.15	AC 3.15	6%
7	DC 152	DC 148	15%
8	DC 143	DC 139	15%
9	DC 107	DC 103	15%
10	DC 136	DC 132	15%
11	DC 133	DC 129	15%
12	DC 10	DC 9.5	15%
13	DC 40	DC 40	25%
14	DC 30	DC 30	25%
15	DC 0.8	DC 0.8	25%
16	DC 0.2	DC 0.2	25%
17	DC 25	DC 25	25%
18	DC 30	DC 30	25%

NATIONAL MODEL RQ-703S

M 246	Takeup Table Bearing Bracket	
M 247	Takeup Rod	
M 248	Fast Forward Lever-A	
M 249	Push Button Lever-B Assembly	
M 250A	Baseplate	
M 251	Sub-baseplate	
M 252	Speed Selector Knob	
M 253	Rewind Table	
M 254	Takeup Table	
M 255	〃 〃 Pulley	
M 265	Brake Rod Pin	
M 273	Drive Idler Arm Spring	
M 275	Instant Stop Lever Spring-A	
M 277	Instant Stop Lever-A	
M 278	〃 〃 Rod	
M 279	〃 〃 Lever-D	
M 280	〃 〃 Spring-B	
M 282	Motor Pulley	
M 283	Motor, 2HC-20E	
M 305	Pinch Roller Spring	
M 306	Brake	

CABINET PARTS

G 1	Volume and Tone Control Knob	
G 2	Head Cover	
G 6	Plastic Consol Assembly	
G 7	Top Panel Assembly	
G 8	Reel Holder	
G 9	Lock Hinge	
G 10	Cabinet Case Top Assembly	
G 11	Cabiner Case Bottom Assembly	
G 12	Rubber Foot L	
G 13	Rubber Foot S	
G 14	Hinge	
G 15	Storage Pocker Lid	
G 16	Jacks Panel	
X 160	Screw,	+M2φ×4
X 161	〃	−M2φ×10
X 162	〃	−M2φ×10
X 165	〃	−M2.6φ×4
X 167	〃	−M2.6φ×10
X 170	〃	−M3φ×4
X 171	〃	−M3φ×5
X 172	〃	−M3φ×6
X 173	〃	−M3φ×8
X 175	〃	−M3φ×12
X 238	〃	−S3φ×8
X 310	〃 〃	8φ×5
X 332	Fiber Washer,	3.5φ×5.5φ×o.5t
X 334	〃 〃	4.2φ×9φ×0.5t
X 335	〃 〃	3.5×5.5φ1t
X 336	〃 〃	6.1φ×8.2φ×0.25t
X 341	〃 〃	6.1φ×13.5×0.5t
X 345	〃 〃	9.2φ×13.5×1t
X 348	〃 〃	6φ×11φ×0.5t
X 349	〃 〃	6φ×12φ×0.5t
X 350	〃 〃	6.2φ×8.2φ×0.25t
X 352	〃 〃	7φ×12φ×0.5t
X 358	〃 〃	3φ×7.5φ×0.5t
X 362	Spring Washer	2φ
X 364	〃 〃	3φ
X 365	〃 〃	4φ
X 366	〃 〃	8φ
X 372	Flat Washer	3φ
X 373	〃 〃	4φ
X 383	C Washer	3.2φ
X 384	〃	4φ
X 385	〃	5φ
X 386	〃	2.6φ
X 387	〃	3φ
X 392	Nut,	2φ
X 393	〃	2.6φ
X 394	〃	3φ
X 395	〃	4φ
X 396	〃	8φ
X 404	Screw	4φ×8

ACCESSORIES

A 1	Dynamic Microphone	(WM-2010N)
A 2	5″ Recording Tape	(RT-5)
A 3	5″ Empty Reel	(RP-5)
A 4	Connection Cord(B)	(QFC-8023)
A 5	Connection Cord(R)	(QFC-8021N)
A 6	Splicing Tape	(QFS-2)
A 7	Operation Manual	

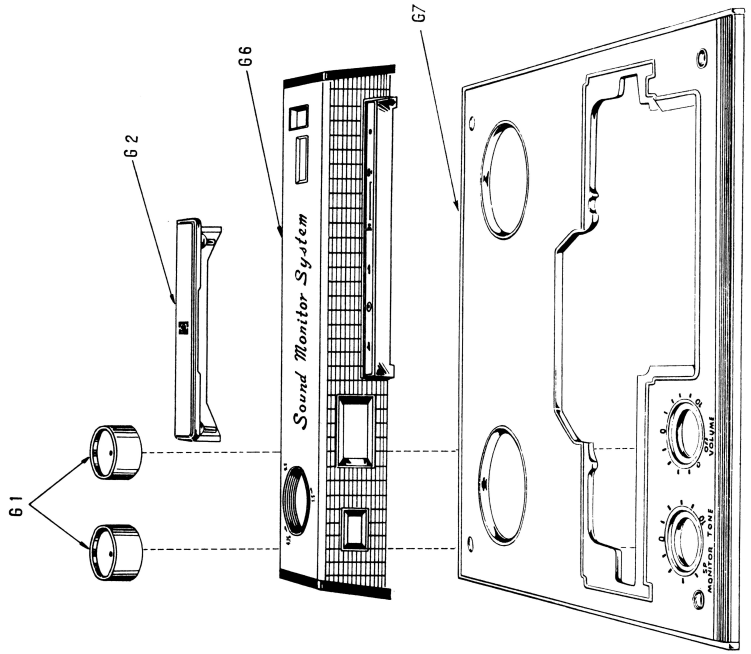

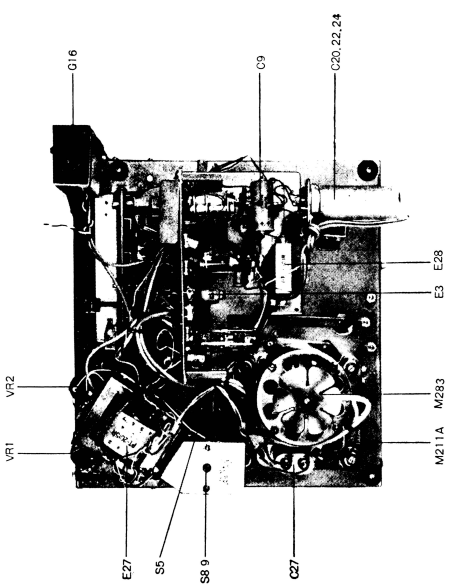

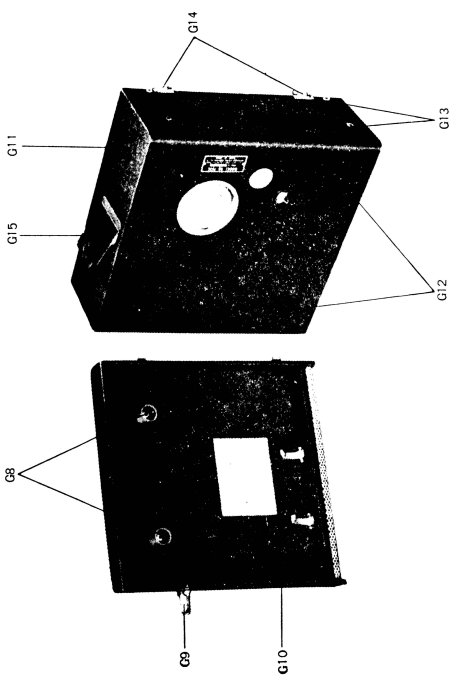

e. Remove the motor from the base plate together with the motor mounting board.
f. Remove four screws holding the motor to the motor mounting board together with the retaining screws of the oiling cup to the motor, thus motor the can be removed from the motor mounting board.

D. HOW TO REMOVE TAPE COUNTER :

a. Loosen set screw at the upper part of the spring-joint of the counter.
b. Remove 2 screws holding the counter bracket to the base plate, thus the counter can be removed together with the holding bracket.
c. By removing 2 screws holding the counter to the bracket, the counter can be disassembled from the bracket.

E. HOW TO REMOVE COUNTER BELT :

Remove the belt from the pulley by removing 2 screws holding the takeup reel shaft bearing bracket.

F. HOW TO REMOVE REWIND REEL TABLE :

Pull the table after removing the "C" washer holding the reel table shaft to the base plate.

G. HOW TO REMOVE TAKEUP REEL TABLE :

Pull the table after removing the set screw at the bottom of the reel shaft support-A.

AMPLIFIER ADJUSTMENTS

A. Stop Switch Adjustment :
In order not to produce any sound from the speaker when the recorder is in the "STOP", "FAST FORWIND" or "REWIND" modes, the secondary winding of the output transformer must be short circuited.

B. Oscillation Frequency Adjustment :
The record bias and erase frequency are determined by the inductance of the oscillator coil (T-0007IB) and C16 (Polystyrene Capacitor, 0.005μF).
Frequency is adjusted at 40Kc$\pm$4Kc. The oscillation frequency is measured by the methods as shown in the following drawing.
First insert a 10 ohm resistor in series to the ground lead wire of the erase head and measure the voltage across the 10 ohm resistor, and compare the frequency with standard CR oscillator. (The comparison is to be made by the Lissajous' figures on the oscilloscope connected to the both units.)
However, if the oscillation frequency is not within the above range, adjust the frequency by turning the adjusting screw of the dust core of the oscillator coil. If the frequency is not within the above range by a wide margin, check the oscillator coil (T-0007IB) C3, C4, capacitors as well as erase head.

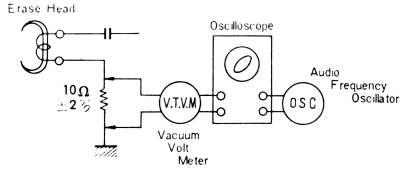

Fig. 14

C. RECORD BIAS ADJUSTMENT:
Record bias is set at 0.25mA.
To check record bias, measure the voltage with V.TV.M connected across the series resistor of 100 ohm specially connected to the ground lead wire of the record/play head.
In this instance, the recording bias current is obtained by the following formula.

$$\text{Current (mA)} = \frac{\text{Voltage on V.T.V.M}}{100 \text{ ohm}} \times 10^3$$

If the voltage is not between the above range, adjust the capacitor (C1) to obtain the above voltage.
And if the current is not within the above range by wide margin, check the capacitor (C1) and recording head.

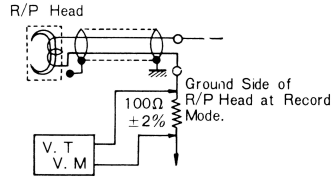

Fig. 15

D. ERASE CURRENT ADJUSMENT :
Erase current is adjusted for 25mA-45mA at record mode.
To measure the erase current, check with V.T.V.M. connected across the series resistor of 10 ohm, specially connected to the ground lead wire of the erase head. In this instance, the erase current is obtained by :

$$\text{Current (mA)} = \frac{\text{Voltage on V.T.V.M.}}{10 \text{ ohm}} \times 10^3$$

If the current is not between the above range, adjust the screw of the capacitor (C1 90PF) to obtain the above current. And if the current is not within the above range by wide margin, check the capacitor (C1 90PF) and erase head.

E. RECORDING LEVEL ADJUSTMENT :
Standard recording level is set at the level that the V.U meter is 0V.U at the record head current of 0.05mA with 1,000 cps tone input. Adjust the R28 390 ohm resistor so as the with the above current. When measuring the recording level. the "P" and "G" of the oscillator coil or "G" and "E" of the V2b 6BL8/T must be short circuited.
The record head current is measured in the following setup, and V.T.V.M. reading of 3mV indicates the standard recording level.
The MIC. input level to obtain this output should be −56 db ±5 db (0 db=1V), when equalzer circuit is set for 7½ ips speed and volume control is set for maximum.

LUBRICATION & CLEANING

All rotating parts are factory lubricated. However, for every 500 hours of use, the following lubrication must be made with sewing machine oil.
These parts are all marked as "OIL". Excessive oil is undesirable, and if the oil is overflown to the other parts, slippage might happen.

2 drops to the capstan bearing
1 drop to the pinch roller bearing
1 drop to the idler bearing
1 drop to the the tension pulley bearing
2 drops to the reel table bearing
2 drops to the fast forward roller bearing.

The record, play back and erase heads, tape guides, capstan and pinch roller are subject to an accumulation of tape coating residue. Use a soft cloth dampen with carbon tetrachloride to clean the above-mentioned parts.
Rubber tired idlers, rewind roller, rubber belt and pinch roller must be kept free from oil or grease. Use a soft cloth and cleaning fluid (carbon tetrachloride) to clean oil and grease from rubber parts. When you clean these parts, do not forget to clean other rollers which are in contact with the parts.
Always clean the unit after service is completed.

NATIONAL MODEL RQ-703S

SPECIFICATIONS

Power Source:	AC100V, 115V, 125V, 200V, 230V, 250V (50,60c/s)
Power Consumption:	About 40W
Output:	2W
Tubes:	6267 (1) 6BL8 (1) 30A5 (1)
Recording System:	AC Bias 40KC
Erasure System:	AC Erasure
Track System:	Double Track System
Tape Speeds:	3 speeds, 7-1/2 ips. (19cm/sec) 3-3/4 ips. (9.5cm/sec) 1-7/8 ips. (4.75cm/sec)
Frequency Response:	100-15,000 c/s at 7-1/2 ips. 100-12,000 c/s at 3-3/4 ips. 100- 5,000 c/s at 1-7/8 ips.
Input Impedance:	Microphone 20k ohms (1) Radio 1.5M ohms (1) External Speaker 8 ohms (1)
Built-in Speaker:	6"×4" Dynamic Speaker
Dimensions:	13-1/2" (W) × 13-7/8" (D) ×8" (H)
Weights:	About 22 lbs.

PARTS LOCATION

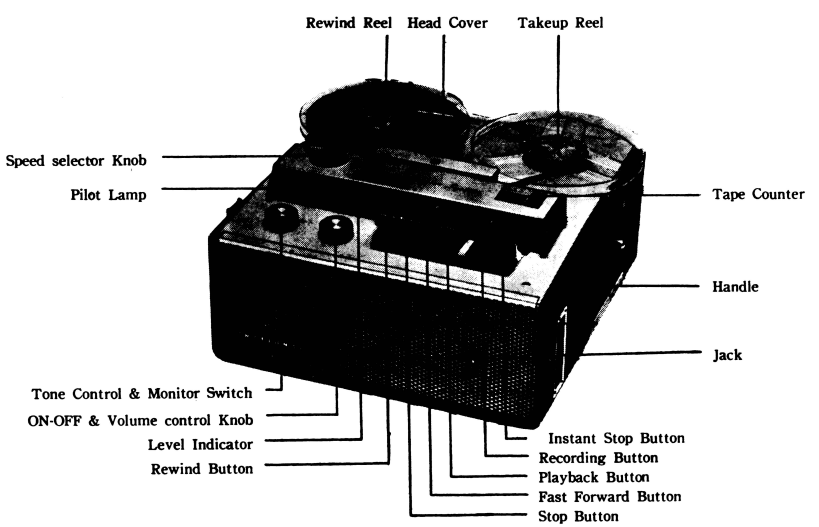

TAPE TRANSPORT CONTROL FUNCTIONS

OPERATIONS

1. When unit is turned "ON", the Pilot Lamp light indicates that recorder is ready for operation. Motor drives Takeup reel pulley, but reel tables will not rotate until one of the push buttons is depressed.
2. Rotate Speed Selector Knob to set Drive Idler at required speed position.
3. When "PLAY" push button is depressed, Drive Idler contacts flywheel, and Pinch Roller presses against capstan. Simultaneously, takeup reel-table starts rotating and unit is ready to "PLAY".
4. When both "RECORD" and "PLAY" push buttons are depressed simultaneously, units is in "RECORD" mode. Depressing "RECORD" push button only, does not put recorder in "RECORD" mode.
5. If "CUE" (Instant Stop) push button is pressed while unit is in "RECORD" or "PLAY" mode, pinch roller is disengaged from capstan, brake shoe contacts supply reel table and stops tape motion. When "CUE" (instant stop) button is released, unit is returned to original mode.
6. When "REWIND" push button is depressed, drive belt contats supply reel table by means of Rewind Tension Pulley, causing supply reel table to rotate rapidly.
7. When "FAST FORWARD" push button is depressed, takeup reel table starts rotating rapidly.

TAPE SPEED SELECTION (Refer to Fig. 2)

Speed selection cannot be made when "PLAY" push button is engaged. Speed Selector shaft is locked by Speed Selector Safety Bracket to prevent accidental tape damage.

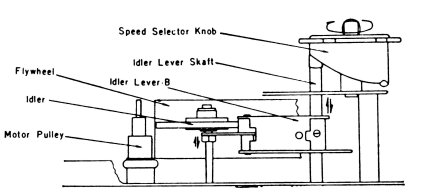

Fig. 2

PLAYBACK AND RECORD (Refer to Fig. 3)

When "PLAY" push button is depressed, Drive Idler contacts flywheel, while Takeup Table Pulley contacts Takeup Table and Pinch Roller is pressed against Capstan, simultaneously.
When "RECORD" and "PLAY push buttons are depressed simultaneously, unit is in "RECORD" mode.
During "PLAY" and "RECORD" modes, Takeup Table Pulley is lifted by Takeup Rod and contacts Takeup Table.
Takeup torque varies according to weight of tape taken up on Takeup Table and is always constant.

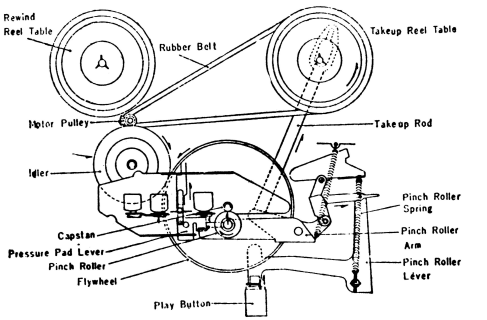

Fig. 3

Slight back-tension to tape is supplied by friction of felt placed in Supply Table against steel plate located on Supply Table Bearing.

FAST FORWARD (Refer to Fig. 4)

When "FAST FORWARD" push button is depressed, Fast Forward Idler contacts takeup table causing table to rotate rapidly.

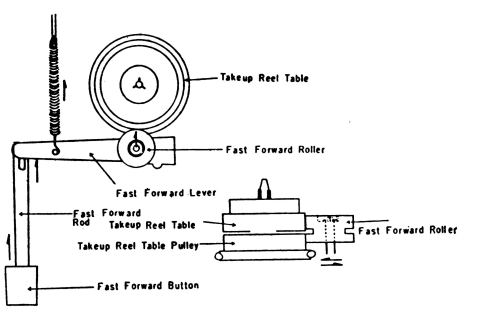

Fig. 4

REWIND (Refer to Fig. 5)

When "REWIND" push button is depressed, Drive Belt is pressed against Supply Table by means of Rewind Tension Pulley. Rotation of Motor Pulley, is transmitted to Supply Table causing it to rotate rapidly.

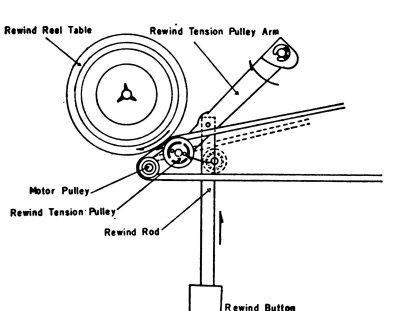

Fig. 5