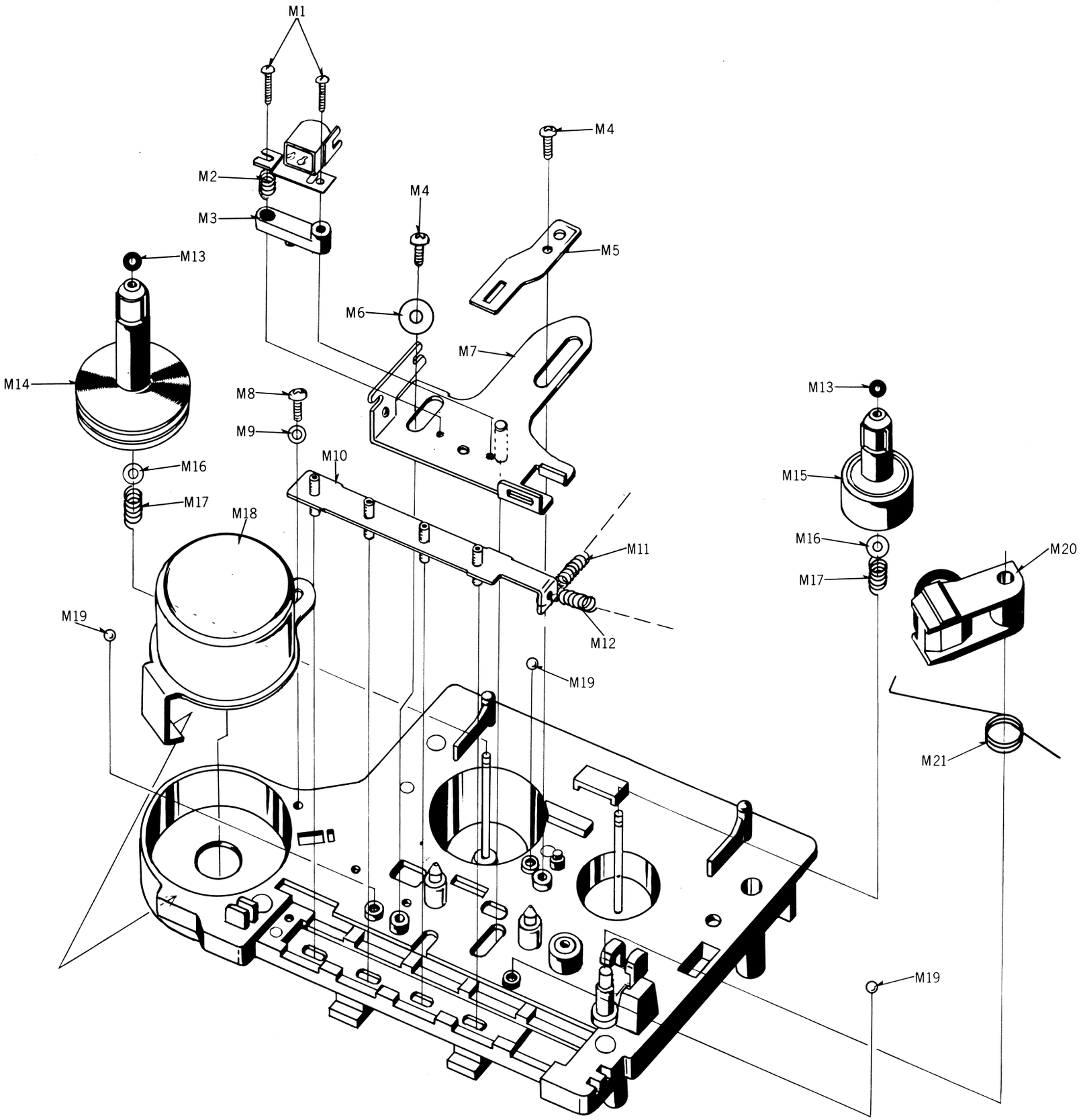EXPLODED VIEWS