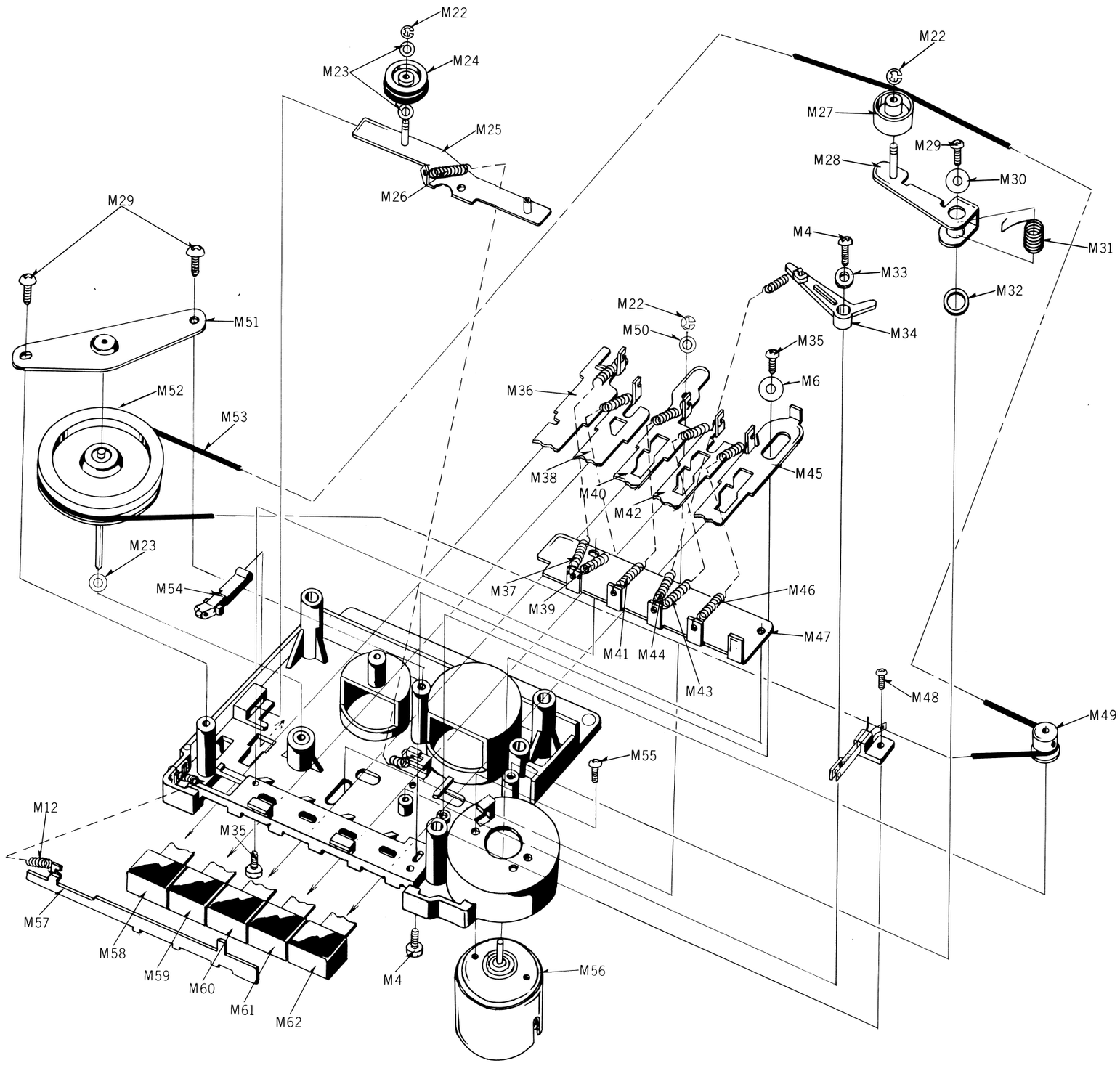

Printed in Japan