SCHEMATIC DIAGRAM MODEL RQ-404S

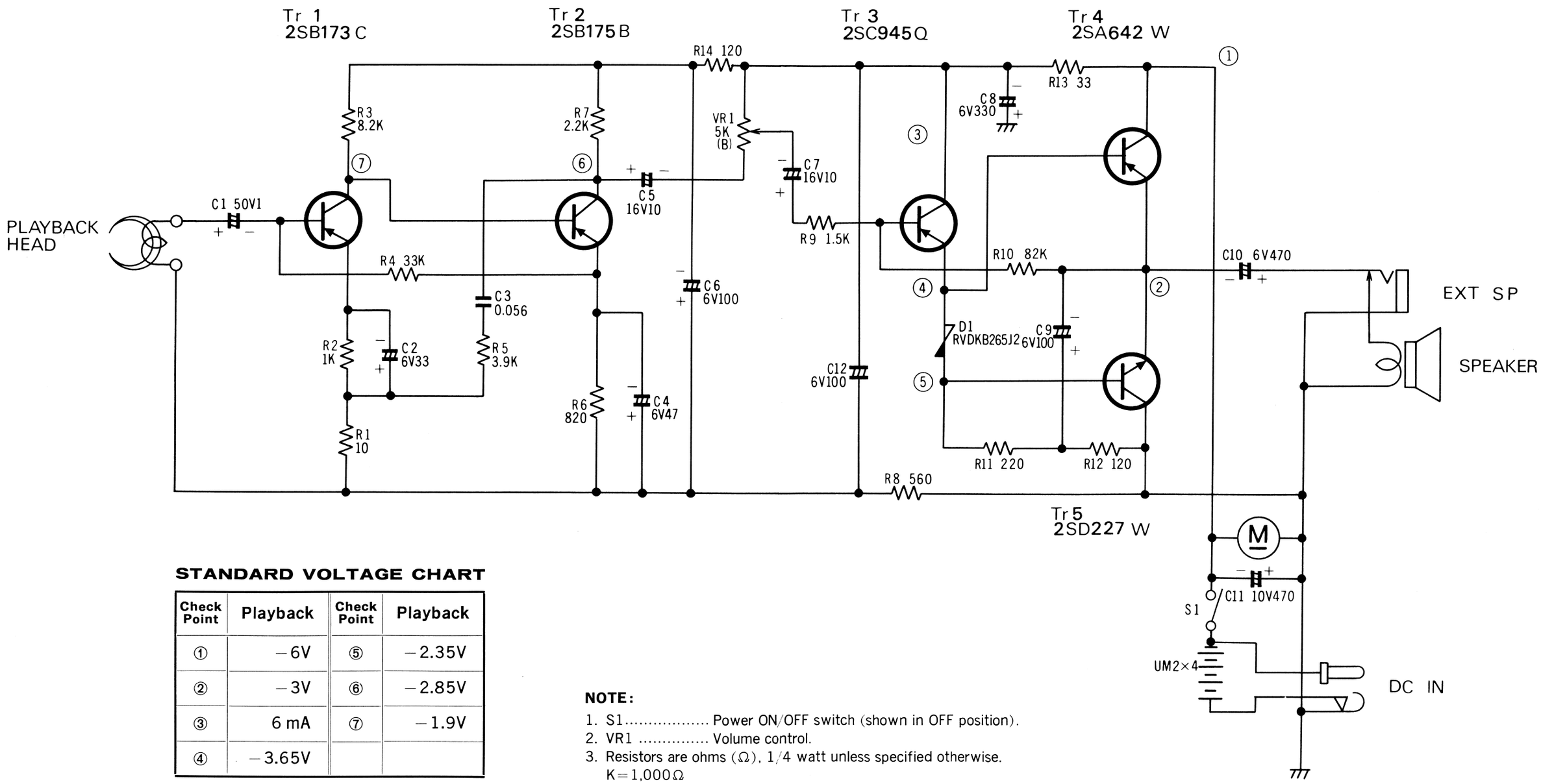

STANDARD VOLTAGE CHART

Check Point	Playback	Check Point	Playback
①	−6V	⑤	−2.35V
②	−3V	⑥	−2.85V
③	6 mA	⑦	−1.9V
④	−3.65V		

NOTE: All measurements are under no signal conditions with volume at minimum position.
Use VTVM for voltage measurements.

NOTE:

1. S1..... Power ON/OFF switch (shown in OFF position).
2. VR1 ..... Volume control.
3. Resistors are ohms (Ω), 1/4 watt unless specified otherwise.
   K=1,000Ω
4. Capacitors are microfarad (μF) unless specified otherwise.
   P=Pico-farads.
5. Encircled numbers (○) show the checkpoint for voltage.
   The values are marked the standard voltage chart.