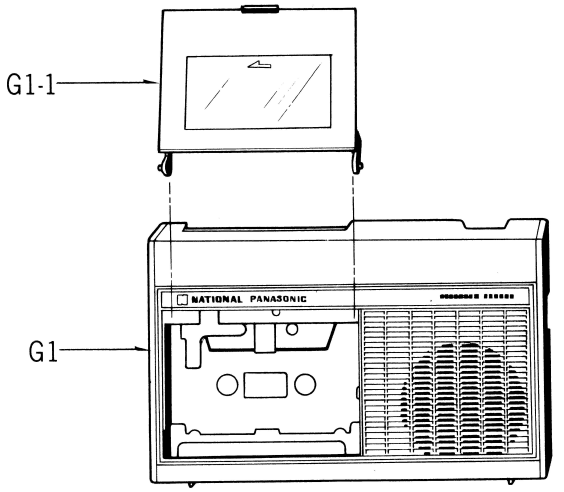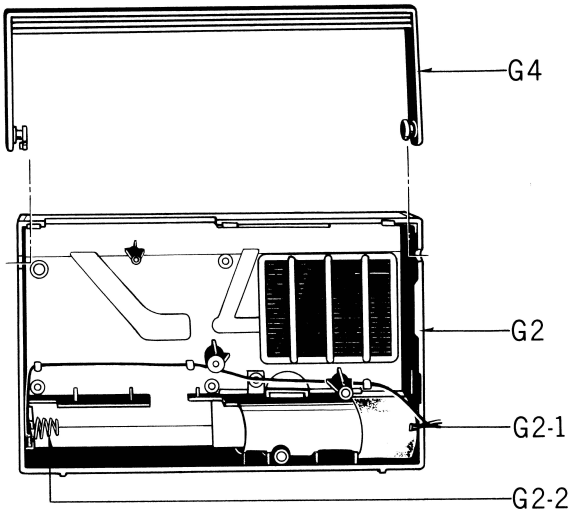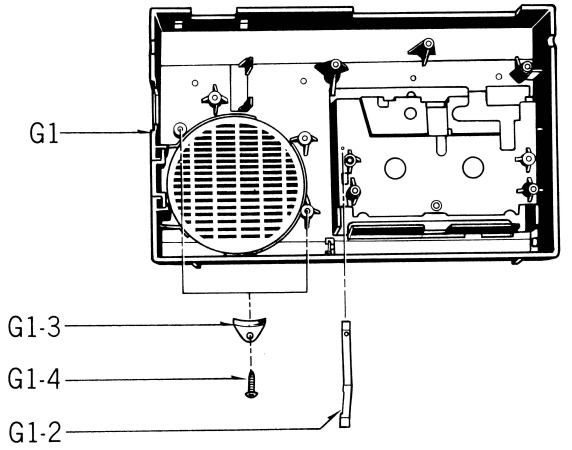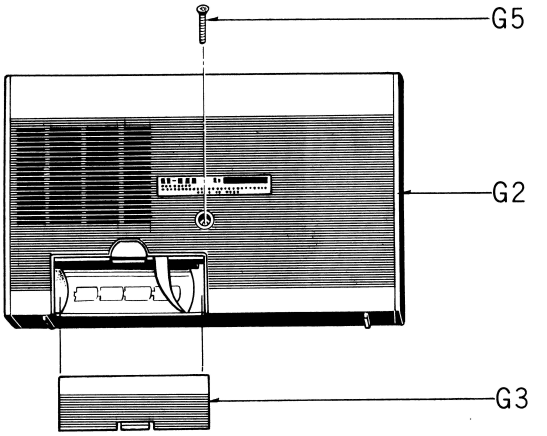CABINET PARTS