SPECIFICATIONS

Power Source:	4 Cells D.C 6 Volts
Audio Output:	200 mW (maximum)
Transistor:	2SB175 (2) 2SB172 (3)
Thermistors:	QVM2501 (1)
Recording System:	A.C Bias 30K cycles
Erasure System:	D.C Erase
Track System:	2 Track System
Recording Level Indicator:	Neon Lamp
Tape Speed:	1-7/8 ips. (4.75 cm/sec.) 1 Speed
Playing Time:	20 minutes with 2″ Standard Tape (100 ft)
Frequency Response:	200-3,000 cycles
Input Impedance:	Microphone 5K ohm
Output Impedance:	Earphone 8 ohm
Rewind Time:	Within 1 min. 40 sec.
Life of Dry Cells:	10 hours of Contunuous Use
Built-in Speaker:	2-3/4″(7 cm) Round Dynamic Speaker
Dimensions:	2-3/4″(H) × 7-5/8″(D) × 5″(W)
Weight:	2-5/8 ibs.

PARTS LOCATION

1. Rewind Button
2. Stop Button
3. Playback Button
4. Record Safety Button
5. Level Indicator (Neon Lamp)
6. Volume Control
7. Microphone Remote Control Jack
8. Earphone Jack
9. A.C Adaptor Jack
10. Takeup Reel
11. Supply Reel
12. Battery Chamber

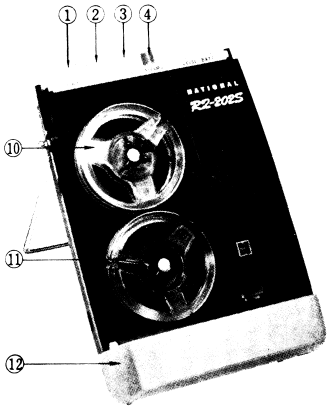

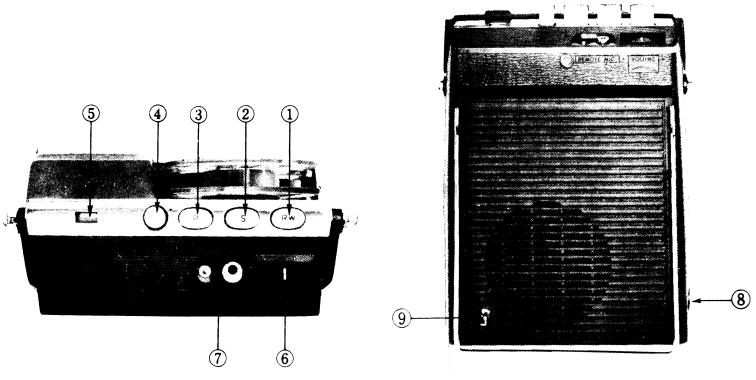

Fig - 1.

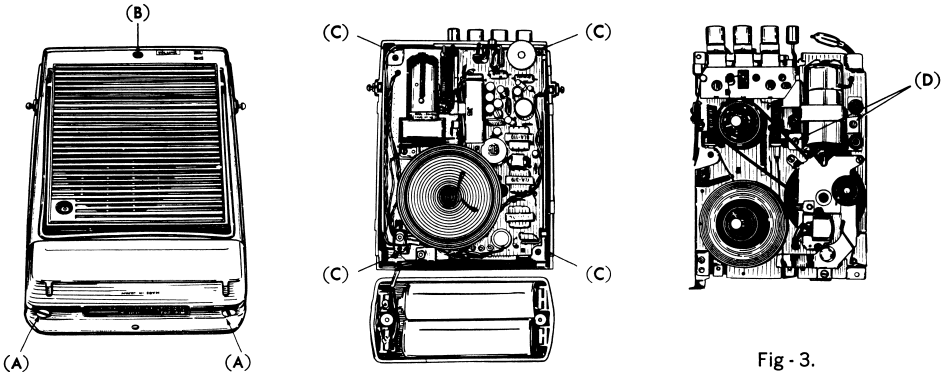

Fig - 3.

DISASSEMBLY INSTRUCTIONS

Great care should be taken in removal of plastic Cabinet to avoid scratching surface.

A. To remove Bottom Cover
   1. Loosen two screws (A) holding battery compartment and take off battery compartment.
   2. Unscrew and remove a screw (B) holding bottom cover to chassis and remove bottom cover.

B. To remove Cabinet Body
   Unscrews and remove four screws (C) holding the chassis to the body and remove chassis.

C. To remove Motor
   Unscrew and remove two screws (D) holding motor bracket to chassis.

WINDING TORQUE FOR PLAYBACK

A. Place a 2 inch reel on the Takeup Reel Table and hang the end of the few feet of tape wound on the reel on a Tension Gauge as shown in the drawing and depress the PLAY button.
B. Proper tension is between 0.3 - 0.5 ozs. (8 - 14 g)
C. If tension is not within above range, adjust Clutch Leaf Spring.

WINDING TORQUE FOR REWIND

A. Place a 2 inch reel on the Rewind Reel Table and hang the end of the fully wound tape on a Tension Gauge and depress the REWIND button.
B. Proper tension is between 0.3 - 0.5 ozs. (8 - 14 g)
C. If tension is not within above range, adjust Supply Reel Table Lever.

REEL TABLE ADJUSTMENTS

A. When tape is loose between reels or Takeup Reel Table does not rotate:
   1. Check Belt.
   2. Adjust Clutch Leaf Spring so that Takeup Reel pulley makes tight contact against Takeup Reel Table after removing Takeup Reel Table and Takeup Reel Pulley.
B. When Rewind Reel Table does not rotate at all or does not rotate smmoothly:
   1. Adjust Supply Reel Table Lever so that gap between tip of the lever and Rewind Cam is about 3/64″ when REWIND push button is depressed.
   2. Check coupling between Flywheel and Supply Reel Table and make sure that they are not slipping.

TAPE SPEED ADJUSTMENT

A. Tape speed can be adjusted by moving motor forward or backward in direction of arrow in the Fig. 4, after loosening two screws holding motor holder to base plate.
B. If motor is moved toward Flywheel, speed is increased. Movement in opposite direction decreases speed.
C. To adjust tape speed, use of "timing tape "and stop watch is recommended.
D. Adjust Shifting Arm of Motor so that:
   1. There is a gap between Motor Shifter and Motor Shifting Arm when the unit is oprating with tape threaded.
   2. The Motor Shaft is disengaged from Flywheel when the unit is not operating.

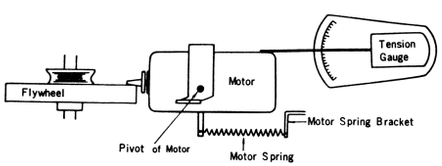

Fig. - 10.

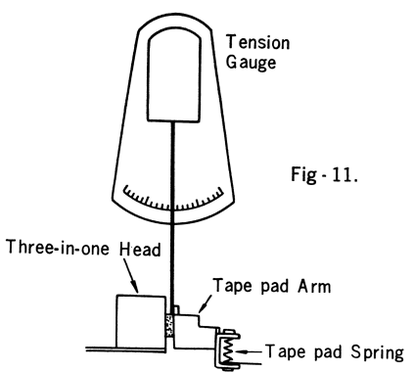

Fig - 11.

MOTOR SHAFT PRESSURE AGAINST FLYWHEEL

A. Put a tension gauge on the motor as shown on the Fig. 10 without the tape threaded and gradually force the downward pressure until Motor Shaft is disengaged from Flywheel and read the gauge.
B. Proper pressure is between 3.5 - 4.2 ozs. (100 - 120g)
C. If tension is not within above range, adjust tension of Motor Spring either by shortening the spring or bending its bracket.

TAPE PAD PRESSURE ADJUSTMENT

A. Set the unit in PLAY mode.
B. Place a tension gauge at the center of tape pad.
C. Gradually draw the pad from the head until pad is disengaged from head and read the scale.
D. proper pressure os between 0.5 - 0.9 ozs (15 - 25 g)
E. If tension is not within above range, adjust pad Spring.

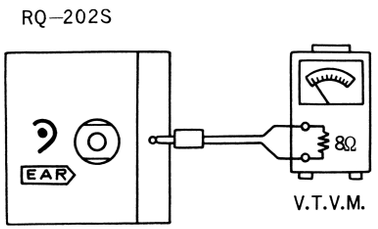

PLAY Mode Fig - 12.

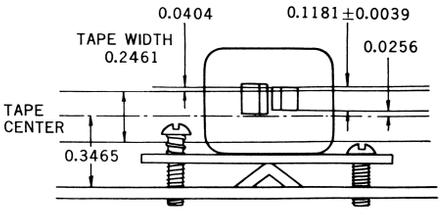

Fig - 13. Unit : Inch

HEAD AZINUTH ADJUSTMENTS

Instruments required: Vacuum Tube Voltage Meter (V.T.V.M.), Standard Alignment Tape, Resistor 8Ω.
Measuring Circuit: Refer to Fig 12.
Measuring Method:
A. Connect V.T.V.M. to EARPHONE Jack and terminare it with 8Ω resistor.
B. Thread Standard Alignment Tape (azimuth adjustment part - 3,ooo cps. at 1-7/8 ips. speed. Ifunavailable, use 5,000 cps. tone recorded on AMPEX Standard Alignment Tape at 3-3/4 ips. speed, which will be reproduced as 2,500 cps. on RQ-202S and RQ-202SE) and set recorder to PLAYBACK mode.
C. Turn head adjustment screw for maximum reading at V.T.V.M.
D. After completion of above adjustment, lock screw with paint.
E. Adjust level of head (in relation to tape) as in Fig. 13. For quick check, lift pressure pad assembly with finger and note position of tape inrelation to head.

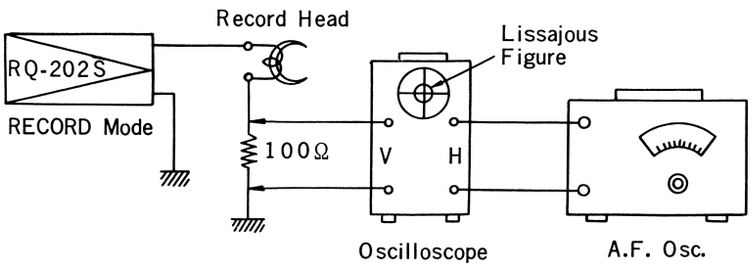

Fig - 14.

AMPLIFIER ADJUSTMENTS

RECORD BIAS FREQUENCY

Instruments required: Oscilloscore, Audio Frequency Oscillator (A.F. Osc.), 100Ω Resistor.
Measuring Circuit: Refer to Fig. 14.
Measuring Method:
A. As shown in Fig. 14 insert a 100 Ω resistor to ground lead wire of Record Head and connect vertical axis of Oscilloscope across resistor; connect horizontal axis of Oscilloscope to output terminal of A.F. Osc..
B. When recorder is set to RECORD mode, connected as abobe, Lissajous figure will appear on the Oscilloscope; refer to this figure, to check frequency of bias oscillator.
Standard frequency is 30KC± 5KC.
C. If frequency is not within above range, adjust core of Bias Oscillator Coil until above frequency is obtained.

TROUBLE SHOOTING GUIDE 1

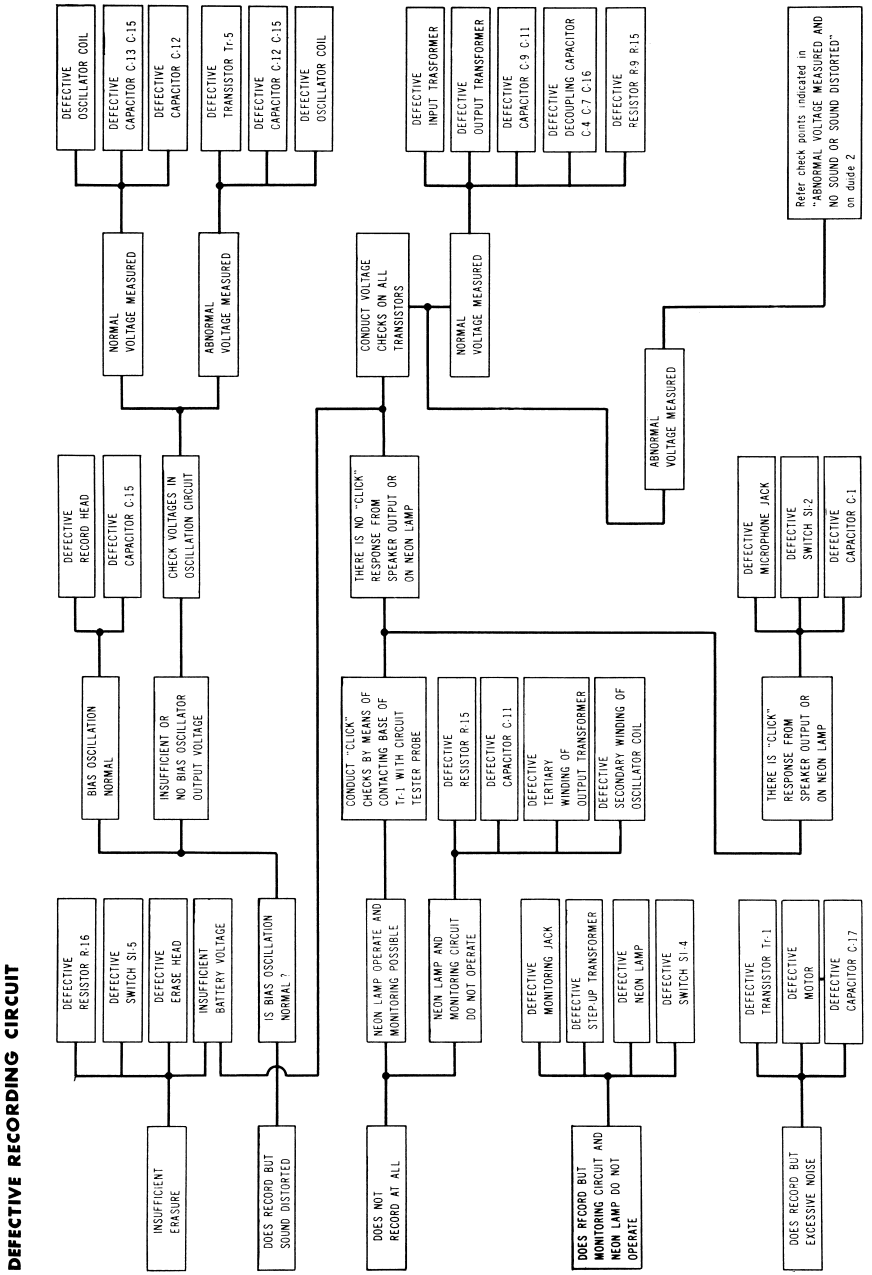

TROUBLE SHOOTING GUIDE 2

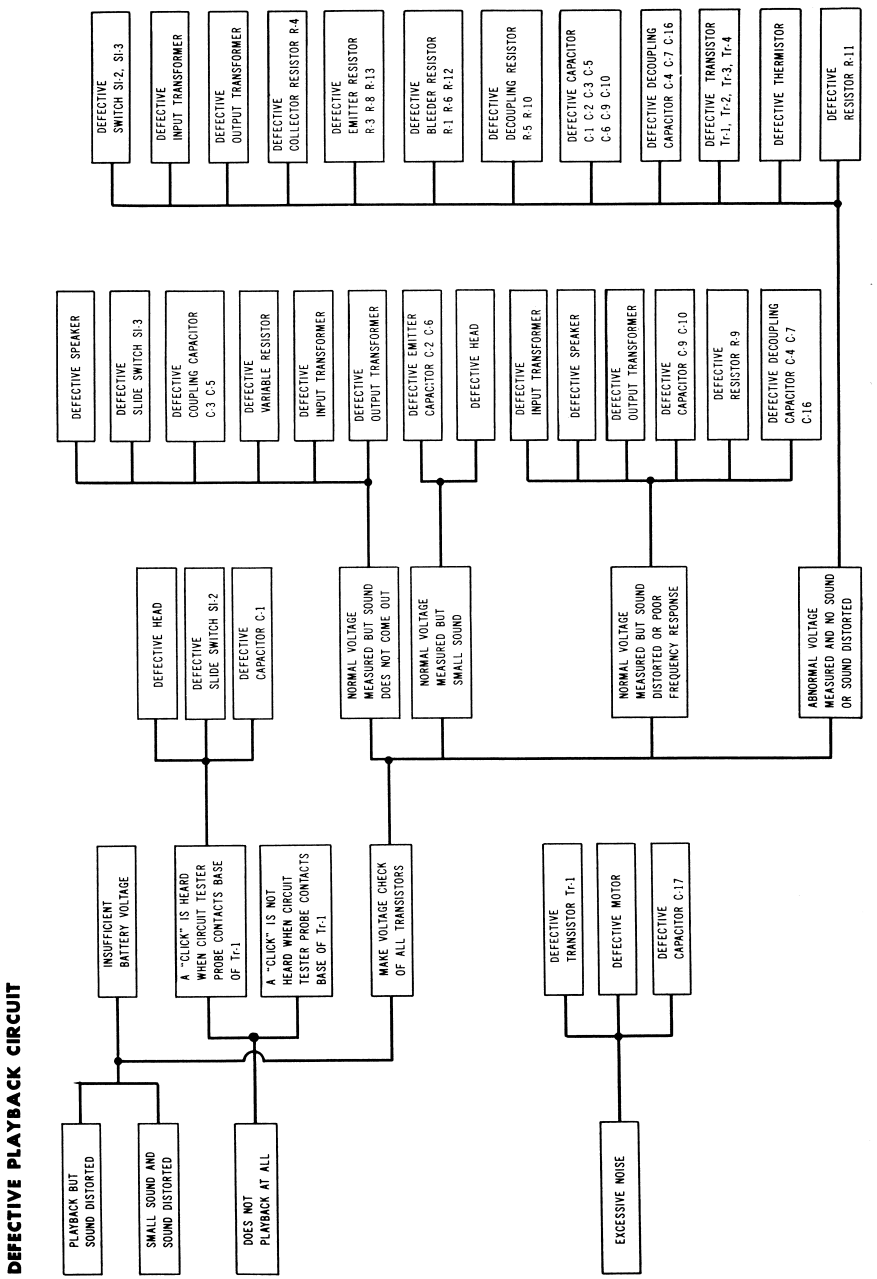

REPLACEMENT PARTS LIST

ATTENTION:
Please order Replacement Parts according to this Replacement Parts List.
The parts which are not listed up here will not be supplied.
So a part in an assembly has to be ordered as a whole assembly.

RESISTORS

Ref. NO.	Description	Parts NO.
R-1, R-2, R-3, R-4	Compound Carbon Resistors	EXB-4ZG02
R-5	330Ω 1/4 Watt 10% Carbon Resistor	QRD-14TRK331
R-6, R-7, R-8	Compound Carbon Resistors	EXB-3ZG02
R-9	220KΩ 1/4 Watt 10% Carbon Resistor	QRD-14TRK224
R-10	220Ω 1/4 Watt 10% Carbon Resistor	QRD-14TRK221
R-11	2.7KΩ 1/4 Watt 10% Carbon Resistor	QRD-14TRK272
R-12	150Ω 1/4 Watt 10% Carbon Resistor	QRD-14TRK151
R-13	4.7Ω 1/4 Watt 10% Carbon Resistor	ERD-14TRK4R7
R-14	10Ω 1/4 Watt 10% Carbon Resistor	QRD-14TRK100
R-15	Compound Resistor and Capacitor (with C-11)	EXA-2PM20153
R-16	220Ω 1/4 Watt 10% Carbon Resistor	QRD-14TRK221
R-17, R-18, R-19, R-20	Compound Carbon Resistors	EXB-4ZG03
R-21	470KΩ 1/4 Watt 10% Carbon Resistor	ERD-14TK474

VARIABLE RESISTOR

VR	20KΩA	Volume Control	EVJ-09AT12A24

CAPACITORS

C-1	10μF	WV	6V		Electrolytic Capacitor	ECE-B6V10
C-2	30μF	WV	6V		Electrolytic Capacitor	ECE-A6V30
C-3	10μF	WV	6V		Electrolytic Capacitor	ECE-B6V10
C-4	50μF	WV	10V		Electrolytic Capacitor	ECE-A10V50
C-5	10μF	WV	6V		Electrolytic Capacitor	ECE-A6V10
C-6	30μF	WV	6V		Electrolytic Capacitor	ECE-A6V30
C-7	200μF	WV	10V		Electrolytic Capacitor	ECE-A10V200Y
C-9	0.01μF	WV	50V	20%	Mylar Capacitor	ECQ-G05103MZ
C-10	0.01μF	WV	50V	20%	Mylar Capacitor	ECQ-G05103MZ
C-11	Campound Resistor and Capacitor (with R-15)					EXA-2PM20153
C-12	560PF	WV	125V	10%	Polystyrene Capacitor	QCQ-S1561K
C-13	560PF	WV	125V	10%	Polystyrene Capacitor	QCQ-S1561K
C-14	20μF	WV	10V		Electrolytic Capacitor	ECE-A10V20
C-15	30μF	WV	6V		Electrolytic Capacitor	ECE-A6V30
C-16	200μF	WV	10V		Electrolytic Capacitor	ECE-A10V200Y
C-17	30μF	WV	10V		Electrolytic Capacitor	ECE-B10V30
C-18	0.001μF	WV	50V		Titanium Capacitor	ECKD-05102M
C-19	1μF	WV	15V		Electrolytic Capacitor	ECE-A15V1
C-20	3μF	WV	15V		Electrolytic Capacitor	ECE-A15V3

MECHANICAL PARTS

Ref. NO.	Description	Parts No.
M-651	Supply Reel Table Assembly	QXP-0104
M-652	Takeup Reel Table Assembly	QMS-0105
M-653	Supply Reel Table Shaft	QMS-1074
M-654	Takeup Reel Table Shaft	QMS-1073
M-655	Takeup Reel Pulley Assembly	QXP-0088
M-656	Belt	QDB-0023
M-657	Supply Reel Table Lever Assembly	QXL-0047
M-658	Supply Reel Table Lever Spring	QBT-1053
M-659	Cluch Leaf Spring	QBP-1026
M-660	Rod Cover	QMF-1039
M-661	Stop Rod Spring	QBN-1005
M-662	Rewind Rod Assembly	QXM-0010
M-663	Stop Rod Assembly	QXM-0011
M-664	Play Rod Assembly	QXM-0012
M-665	Recrord Push Button Assembly	QXB0035
M-666	Rewind Cam	QMF-1041
M-667	Rewind Rod Spring	QBC-1025
M-668	Play Rod Spring	QBC-1024
M-669	Motor Shifter	QAS-1005
M-670	Mator Shifter Spring	QAS-1006
M-671	Rod Stopper	QMQ-1010
M-672	Rod Guide	QMZ-1009
M-673	Rod Stopper Spring	GBP-1028
M-674	Record Button Slide Spring	QBT-1051
M-675	Record Switch Spring	QBP-1027
M-676	Play Button Link Wire	QMR-1024
M-677	Tape Guide	QAG-1027
M-678	Pinch Roller Arm Assembly	QXA-0021
M-679	Pinch Roller Assembly	QDP-1040
M-680	Tape Pad Arm Assembly	QXV-0012
M-681	Tape Pad Spring	QAP-1043
M-683	Head Adjustment Spring	QBC-1012
M-684	Pinch Roller Spring	QBT-1052
M-685	Upper Baseplate Assembly	QXK-1020
M-686	Upper Baseplate Spacer-B	QMP-1035
M-687	Upper Baseplate Spacer-A	QMP-1034
M-688	Flywheel Assembly	QXF-0012
M-689	Flywheel Thrust Ball	QDK-1001
M-690	Baseplate Assembly	QXK-1018
M-691	Motor Spring	QBT-1054
M-693	Motor Bracket	QKT-1120
M-694	Motor Mounting Rubber Cushion	QBG-1055
M-695	Motor Mounting Rubber Cushion Spacer	QKT-1119
M-696	Motor Assembly	QYQ-0027

ELECTRICAL PARTS

Ref. NO.	Description	Parts NO.
E-241	Neon Lamp	QVL-0301
E-431	Thermistor	QVM-251B
E-432	Three-in-one Head	WY-007Z
E-434	Input Transformer	QLA-0110-1
E-435	Output Transformer	QLA-0319-1
E-436	Neon Transformer	QLQ-0004
E-437	Oscillator Transformer	QLB-0116-1
E-438	Speaker	EAS-7P68SB
E-440	Earphone Jack	QJA-0106
E-441	Cord Clamper	QTD-1125
E-442	A.C Adapter Jack	QJA-0207
E-443	Speaker Mounting Bracket	QKT-1084
E-444	Shielding Cover for Head	QTS-1013-1
E-445	Insulating Sheet	QBJ-1038
E-446	Heat Dissipator for Transistor	QTH-1009
E-448	Microphone and Remote Control Jack	QJA-0212
E-449	Chokecoil (202SEonly)	QLP-0104

TRANSISTORS

Ref. NO.	Description	Parts NO.
Tr-1	Transistor	2SB 175 (B)
Tr-2	Transistor	2SB 175 (B)
Tr-3	Transistor	2SB 172 (A)
Tr-4	Transisror	2SB 172 (A)
Tr-5	Transistor	2SB 172 (A)

SWITCHES

Ref. NO.	Description	Parts NO.
S- 1	Record/Playback Selector Switch	ESD-0169
S- 2	Stop Switch	QSB-0107
S- 3	Rewind Switch (RQ-202S only)	QSB-0129

SCREWS, NUTS, WASHERS

Ref. NO.	Description	Parts NO.
X-160	Screw, Round Head M2∅×4	QHM-120×4U3
X-190	Screw, Round Head M2∅×6	QHM-120×6U3
X-257	Screw, Round Head PH2.6∅×8	QHN-126×8U3
X-363	Spring Washer SW2.6∅	QWS-262U3
X-364	Spring Washer SW3∅	QWS-302U3

SCHEMATIC CIRCUIT DIAGRAM RQ-202S

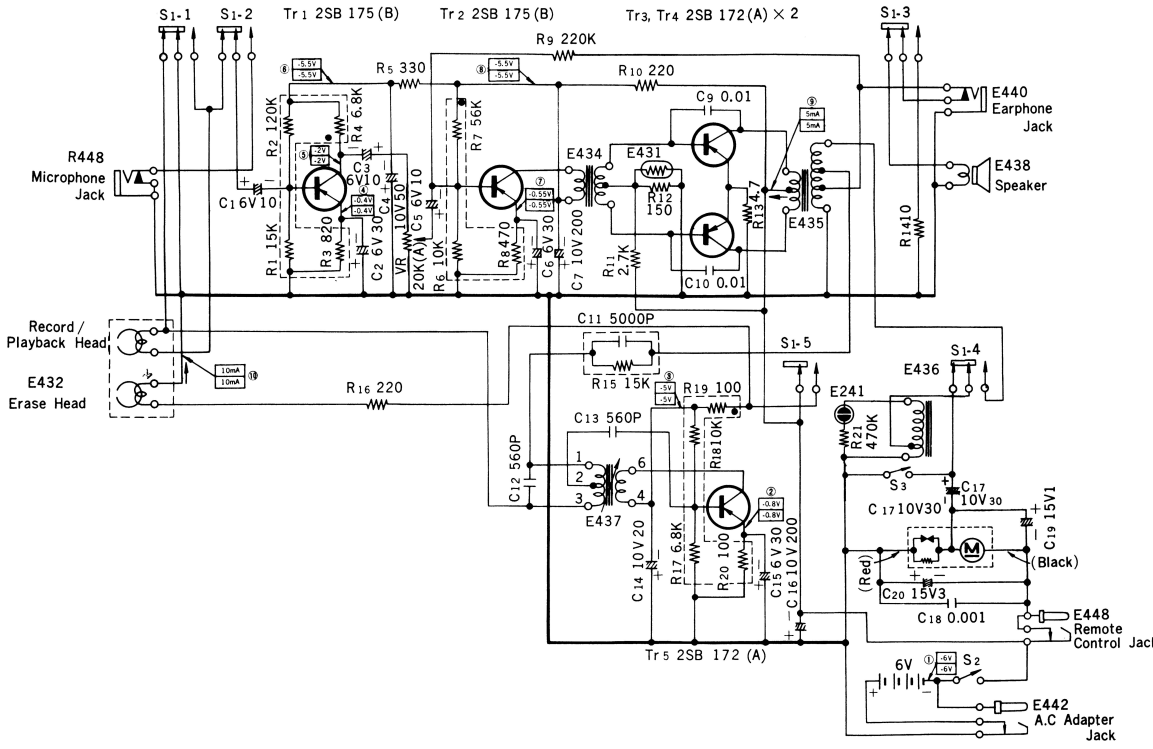

RQ-202S

NOTE: 1. S1……Record/Playback Selector Switch (illustrated in playback mode).
2. S2……ON/OFF Switch (graged with the Playback and Rewind Button).
3. S3……Rewind Switch.
4. Value of resistors with no unit indication is ohm K=1,000 ohm, Resistors with no wattage indication are 1/4 watts.
5. Value of capacitors with no unit indication is μF, P=Pico Farads=uuf.
6. Values indicated in ▭ are D.C to chassis ground with no signal applied.
The upper values should be measured during playback and the lower values during recording.
7. Current value in the diagram shows the D.C current at the time of no signal operation.

SCHEMATIC CIRCUIT DIAGRAM RQ-202SE

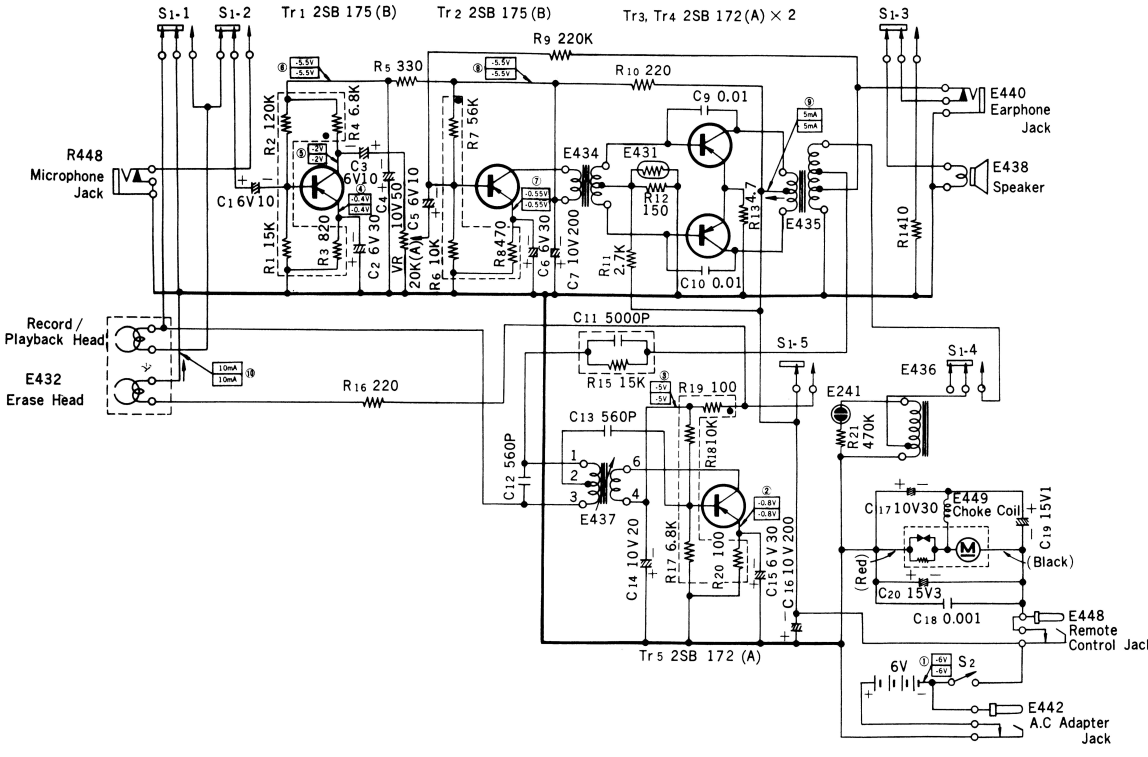

RQ-202SE

NOTE: 1. S1……Record/Playback Selector Switch (illustrated in Playback mode).
2. S2……ON/OFF Switch (ganged with the Playback and Rewind Button).
3. Value of resistors with no unit indication is ohm K=1,000 ohm, Resistors with no wattage indication are 1/4 watts.
4. Value of capacitors with no unit indication is μF, P=Pico Farads=uuf.
5. Values indicated in ▭ are D.C to chassis ground with no signal applied.
The upper values should be measured during playback and the lower values during recording.
6. Current value in the diagram shows the D.C current at the time of no signal operation.

NATIONAL MODEL RQ-202S

WIRE CONNECTION

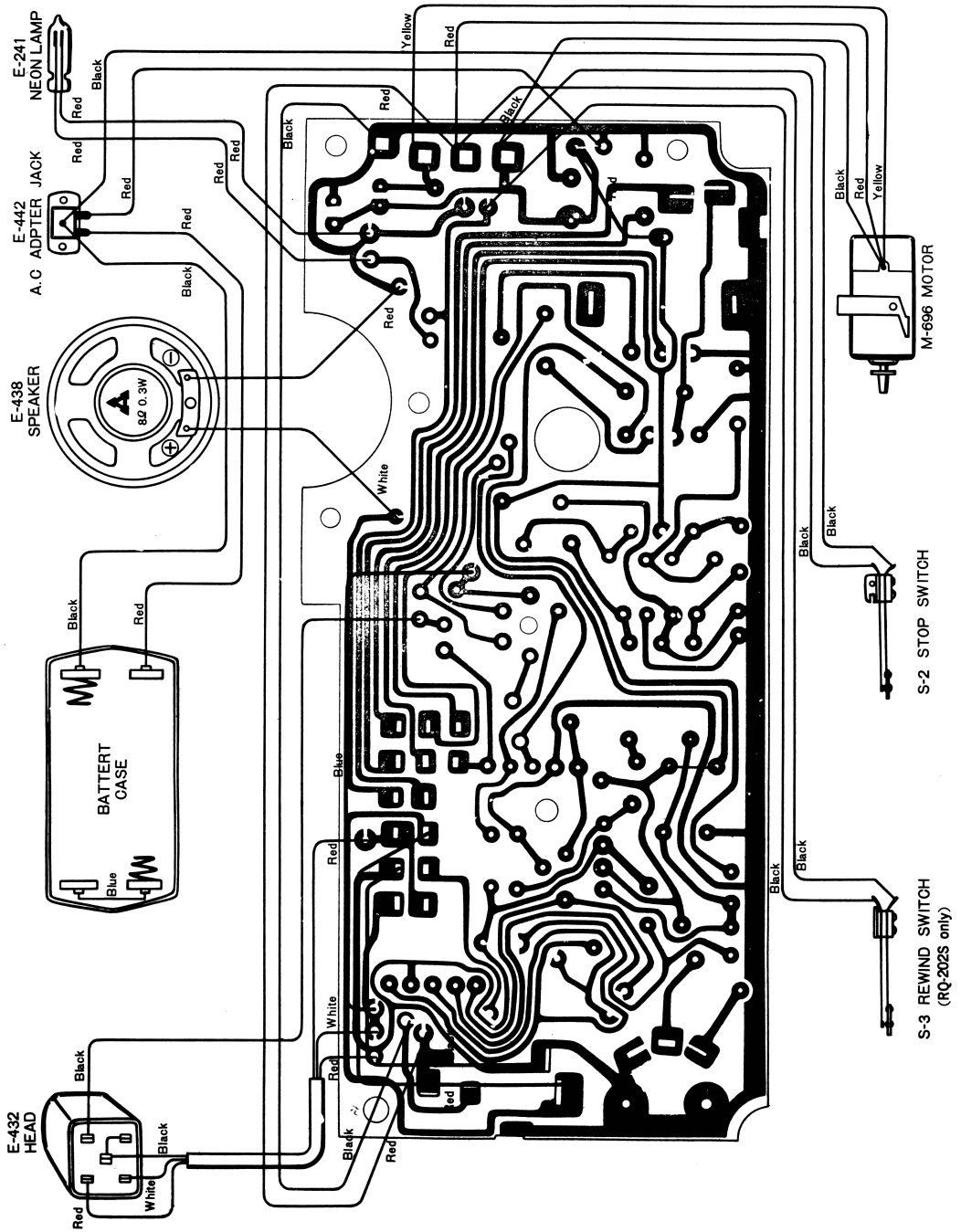

VIEWED FROM THE CONDUCTOR SIDE

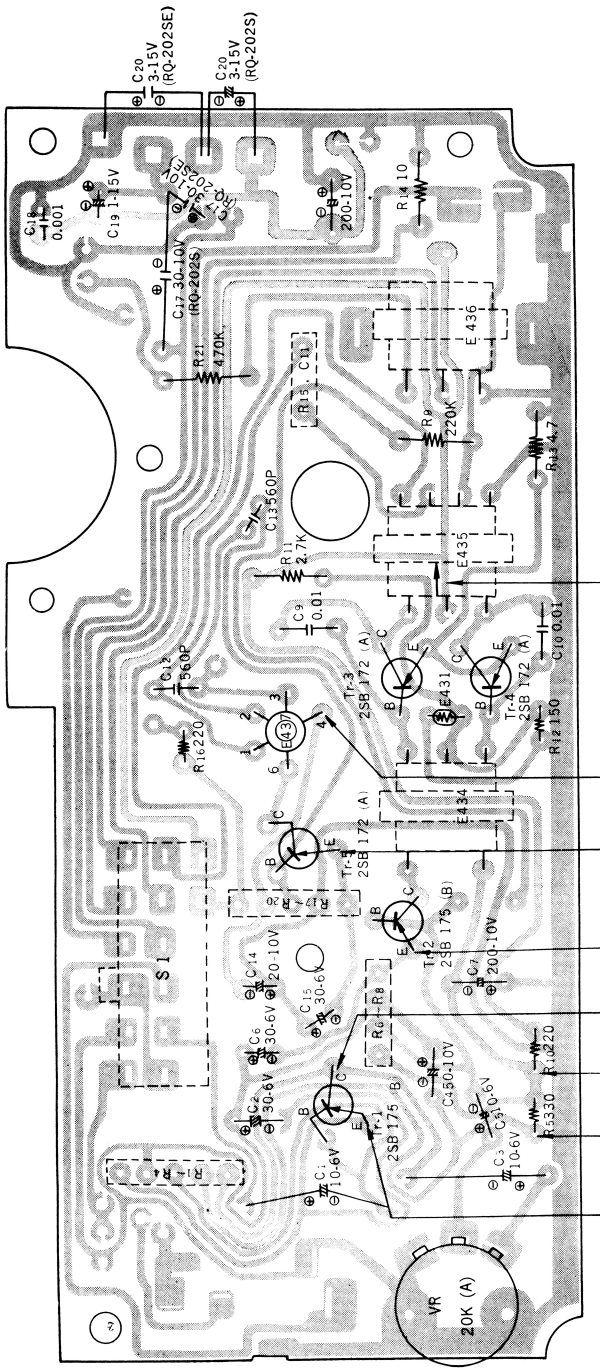

NOTE: Values indicated in ▭ are D.C to chassis ground with no signal applied.
The upper values should be measured during playback and the lower values during recording.

NATIONAL MODEL RQ-202S

Ref. No.	Description	Parts No.
X-374	Flat Washer W2⌀	QWP-2012N1
X-375	Flat Washer W2.6⌀	QWP-2612N2
X-383	Stop Ring E3.2⌀	QNS-324T3
X-393	Hexagonal Nut N2.6	QNN-2622U3
X-394	Hexagonal Nut N3	QNN-3022U3
X-500	Screw, Round Head M2.6⌀ × 16	QHM-226 × 16CL1
X-501	Screw, Round Head S2.6⌀ × 25	QHS-126 × 25U3
X-502	Screw, Round Head PH2.6⌀ × 20	QHN-126 × 20U3
X-503	Screw, Round Head PH2.6⌀ × 14	QHN-126 × 14U3
X-504	Screw, Round Head PH2⌀ × 3	QHN-120 × 3U3
X-505	Screw, Round Head PH2.6⌀ × 3	QHN-126 × 3U3
X-506	Screw, Round Head PH2.6⌀ × 5	QHN-126 × 5U3
X-508	Screw, Round Head PH2.6⌀ × 12	QHN-126 × 12U3
X-512	Screw, Round Head PH2⌀ × 12	QHN-120 × 12U3
X-517	Tapping Screw, Philips Round Head PH2.6⌀ × 8	QHB-526 × 8U3
X-518	Tapping Screw, Philips Round Head PH2.6⌀ × 16	QHB-526 × 16U3
X-525	Round Nut	QNQ-1008-1
X-527	Paper Washer 4.2 × 8 × 0.3	QBK-7023
X-528	Paper Washer 4.2 × 8 × 0.5	QBK-7024
X-529	Paper Washer 4.2 × 8 × 0.8	QBK-7025
X-530	Paper Washer 4.2 × 8 × 1.0	QBK-7026
X-531	Paper Washer 5.2 × 10 × 0.5	QBK-7027
X-533	Stop Ring E1.5⌀	ANS-154T3
X-534	Vinyl Tube 6 × 15 × 0.5	QBT-1087
X-535	Plastic Washer 4.2 × 7 × 0.1	QBJ-3008

CABINET PARTS

G-400	Cabinet Bottom Assembly	QYB-0063
G-401	Volume Control Knob	QGT-1033-1
G-402	Wire Stand	QKT-1083-1
G-403	Cabinet Lid Assembly	QYA-0028
G-404	Cabinet Center Assembly	QYP-0040
G-405	Belt Catch	QKT-1022
G-406	Battery Compartment Assembly	QEO-0004
G-407	Battery Compartment Holding Screw	QHQ-1026

ACCESSORIES (RQ-202S)

Ref. No.	Description	Parts No.
A-33	2″ Recording Tape (100 ft)	QFT-25NR39Z
A-34	2″ Empty Reel	QFR-25NZ
A-35	Microphone	WM-2015N
A-36	Hand Belt	QKH-1019
A-37	Microphone Case	QFK-0005
A-38	Plastic Tube for Batteries	QBJ-1071
A-39	Instruction Book	QQT-0131

(RQ-202SE)

A-33	2″ Recording Tape (100 ft)	QFT-25NR39Z
A-34	2″ Empty Reel	QFR-25NZ
A-35	Microphone	WM-2015N
A-36	Hand Belt	QKH-1019
A-37	Microphone Case	QFK-0005
A-38	Plastic Tube for Batteries	QBJ-1071
A-39	Instruction Book	QQT-0152

PACKING (RQ-202S)

P- 1	Packing Case	QPN-1181
P- 2	Inner Cushion (A)	QPN-1159-1
P- 3	Inner Cushion (B)	QPN-1160
P- 4	Dust Cover	QFD-0040
P- 5	Accessory Case	QPW-1028
P- 6	Packing Cover	QPN-1182

(RQ-202SE)

P- 1	Packing Case	QPN-1189
P- 2	Inner Cushion (A)	QPN-1159-1
P- 3	Inner Cushion (B)	QPN-1160
P- 4	Dust Cover	QFD-0040
P- 5	Accessory Case	QPW-1030
P- 6	Packing Cover	QPN-1128

CIRCUIT BOARD

ELECTORICAL PARTS LOCATION

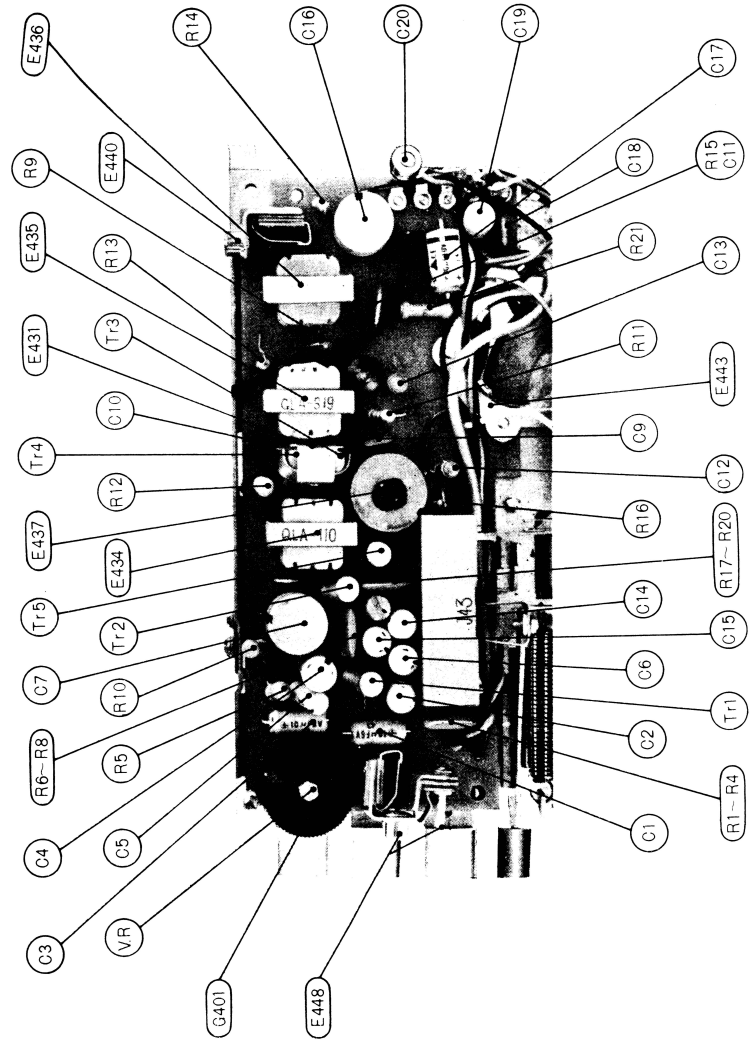

N13-5. NATIONAL MODEL RQ-202S

TROUBLE SHOOTING GUIDE 3

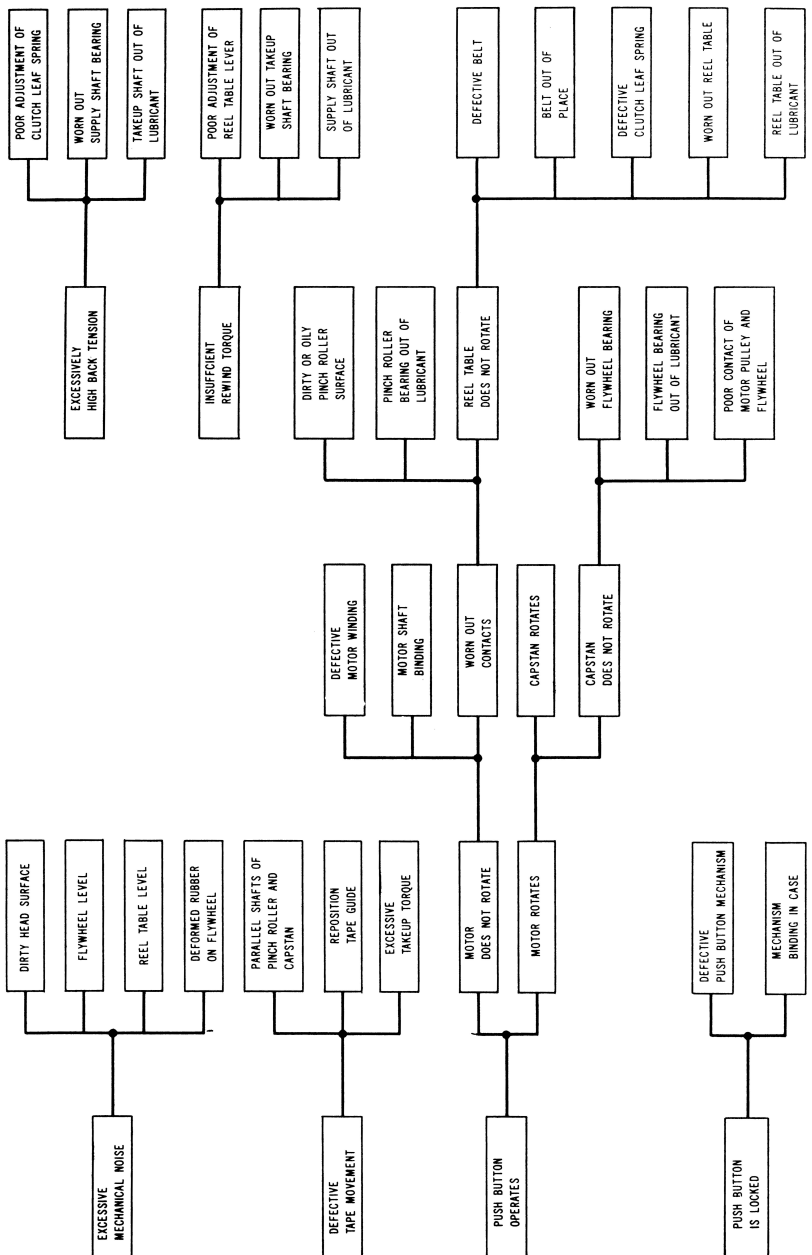

EXPLODED VIEW

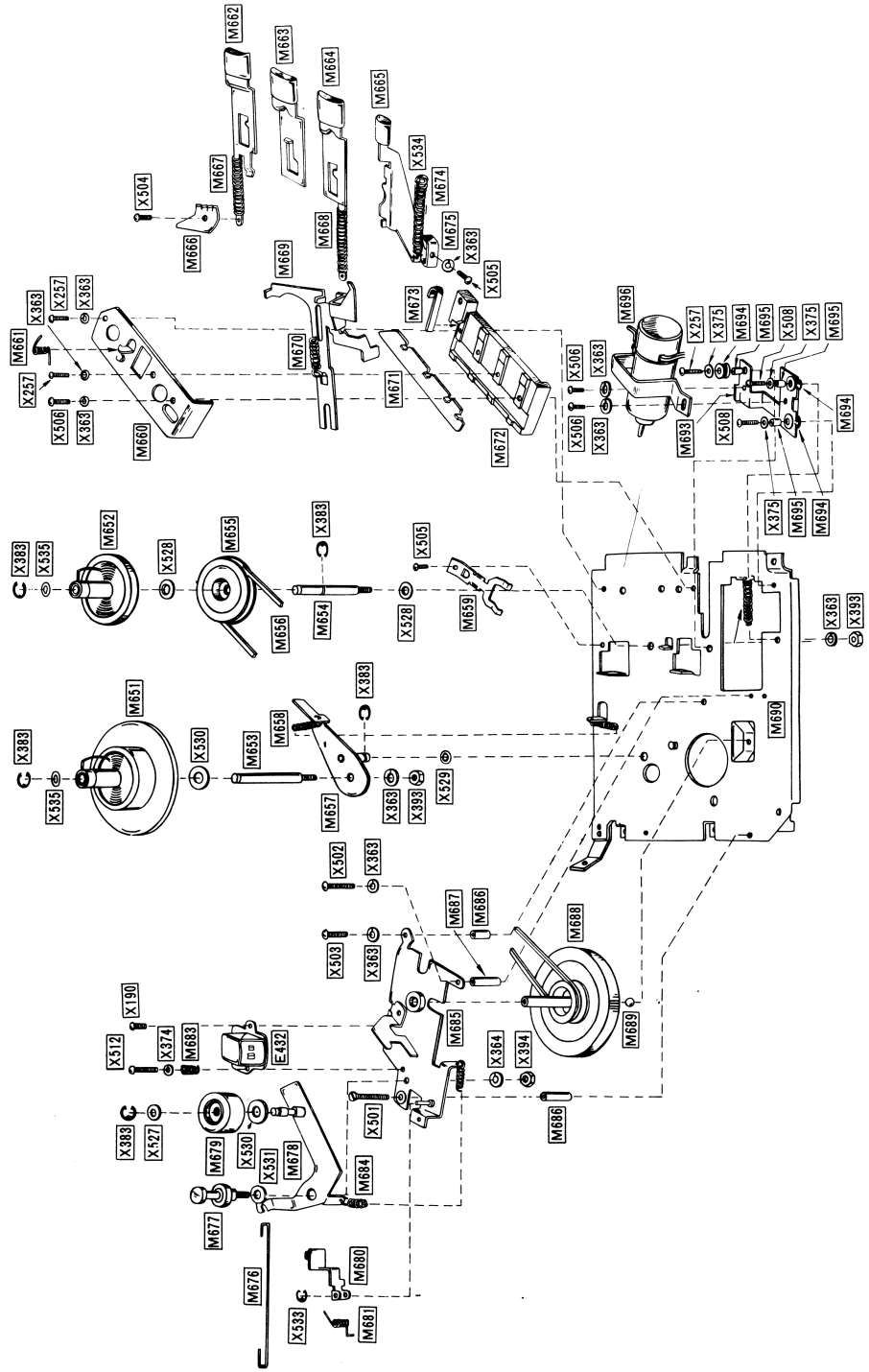

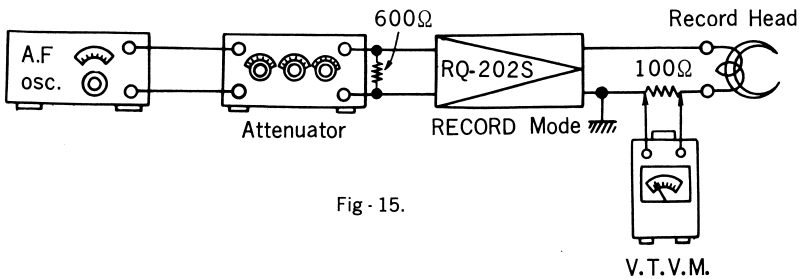

Fig - 15.

RECORD BIAS CURRENT

Instruments required: V.T.V.M., 100 Ω Resistor.
Measuring Circuit: Refer to Fig. 15.
Measuring Method:

A. As shown in Fig. 15 insert 100Ω resistor to ground lead wire of Record Head and connect V.T.V.M. across resistor.
B. When recorder is set to RECORD mode with volume control set at minimum, BIAS (to be fed to Record Head) will be indicated at V.T.V.M..
C. As standard bias current for model RQ-202S is set at 0.8mA, V.T.V.M. reading should be 80mV ($0.8mA \times 10^{-3} \times 100\Omega = 80mV$).
If out of range, adjust core of Oscillator Coil. If current is not within above range by a wide margin, check Record Head.

NOTE: Since the Record and Erase Head are connected to assure correct phase relationship, do not reverse connections to any of the part, as this will result in an increase in noise and distortion.

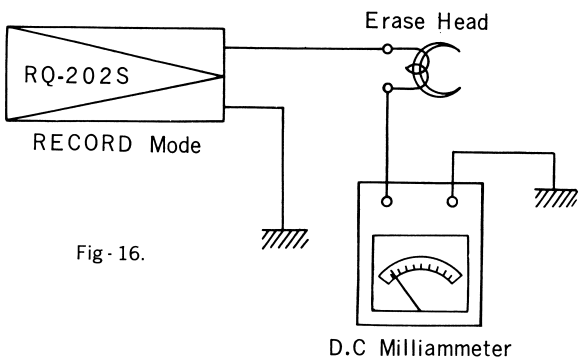

Fig - 16.

ERASE CURRENT

Instrument required: D.C Milliammeter (having range of 0-20 mA or 50 mA)
Mesuring Circuit: Refer to Fig. 16
Measuring Method:

A. Disconnect ground lead wire of Erase Head and insert D.C Milliammeter between wire and terminal as shown in Fig. 16.
B. When recorder is set at RECORD mode, D.C Milliammeter will indicate erase current.
C. Standard erase current is between 8-12 mA. If current measured is not within above range, replace R16 (220Ω) resistor. (Lower resistance value If current is low and vice versa.)
D. If current is not within above range by wide margin after replacement of above R16 resistor and power source side voltage of R16 is measured as normal (-6V D.C), replace head.

NOTE: D.C Milliammeter must be accurate. If "D.C Current Range" of regular "VOM" is used, it should be calibrated for accurate reading.

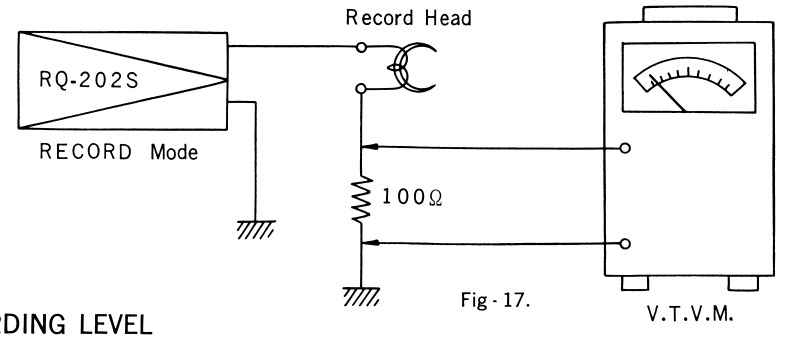

Fig - 17.

RECORDING LEVEL

Instruments required: A.F Oscillator, Attenuator, V.T.V.M., 600Ω and 100Ω Resistors.
Measuring Circuit: Refer to Fig. 17
Measuring Method:

A. Connect A.F Oscillator output to MIC input of recorder through Attenuator (terminate with 600Ω if impedance of attenuator is 600Ω).
B. Insert a 100Ω resistor in series with ground lead wire of Record Head and connect V.T.V.M across resistor.
C. Set recorder in RECORD mode with volume control set at maximum.
D. Set A.F Oscillator output for 1 KC, adjust attenuator to obtain 6mV reading at V.T.V.M. (as standard bias current is set at 0.05 mA), so that Neon Lamp will light up. Attenuation level at this setting should be -70 to 80 db.
E. When Neon Lamp fails to light up check record bias current and if it is in range, check Output Transformer, Stepup Transformer and Neon Lamp. When Neon Lamp will light up with abnormal current, check record head.

CABINET PARTS

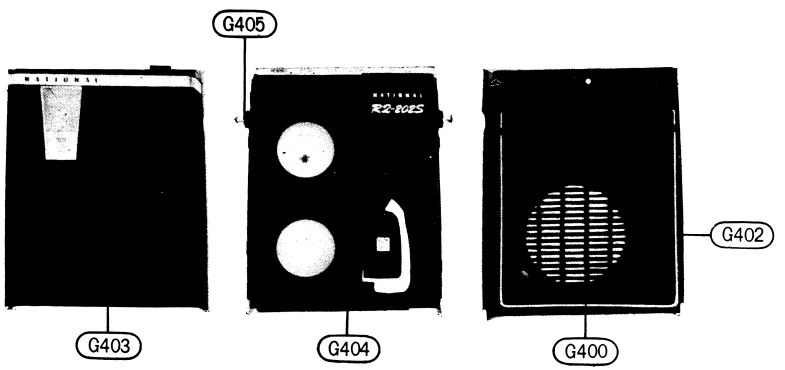

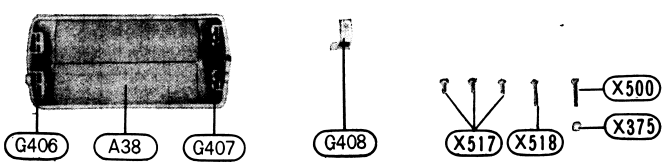

NATIONAL MODEL RQ-202S

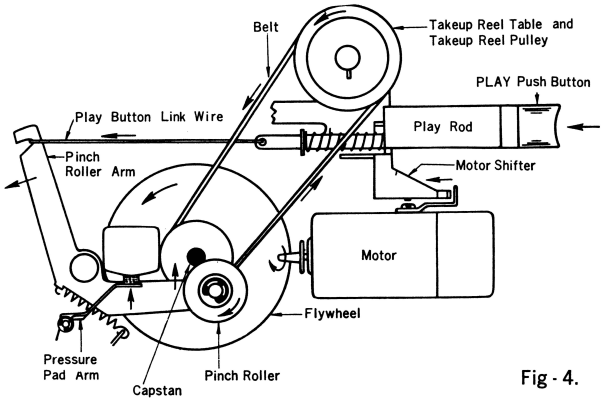

Fig - 4.

TAPE TRANSPORT OPERATION

PLAYBACK

When PLAY Push button is depressed following happens simultaneously:

A. It supplies power to electrical circuit and sets it for PLAYBACK mode.
B. It moves Play Rod and Motor Shifter thus presses Motor Shaft against Flywheel causing Capstan to rotate.
C. Takeup Reel Pulley is rotated by Belt causing Takeup Reel Table starts rotating counterclockwise by friction between Friction Ring on Reel Pulley and friction coupler on Takeup Reel Table.
D. It moves Play Rod thus moves Play Button Link Wire and Pinch Roller Arm and presses Pinch Roller against Capstan causing tape to run constant speed.
E. It moves Pinch Roller Arm and Pressure Pad Arm causing Pressure Pad to press against Head.

NOTE: Takeup torque varies according to weight to tape taken up on Takeup Table and is always constant.

RECORD

When RECORD and PLAY push buttons are depressed simultaneously following happens simultaneously:

A. It moves Record Slide Switch causing electrical circuit to set in Record mode.
B. All the other mechanism is set exactly same as explained in "PLAY" mode above.

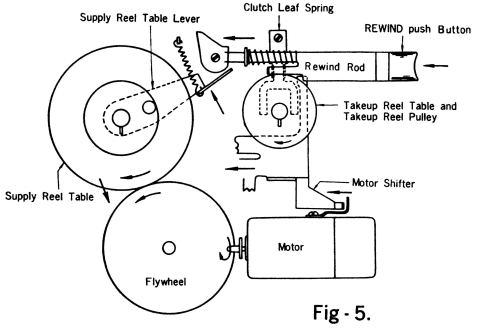

Fig - 5.

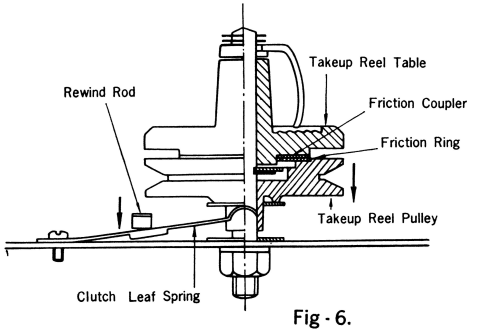

Fig - 6.

REWIND

When REWID push button is depressed following happens Simultaneously:

A. It supplies power to motor.
B. It moves Rewind Rod and moves Motor Shifter thus presses Motor Shaft against Flywheel.
C. It moves Supply Reel Table Lever causing Supply Reel Table to press against Flywheel.
D. Flywheel is rotated by Motor causing Supply Reel Table to rotate clockwise.
E. It moves Rewind Rod thus forces Clutch Leaf Spring downward causing Takeup Reel Table to rotate freely by disengagement of friction mechanism.

NOTE: (RQ-202S only) When Rewind Button is depressed, it moves Rewind Rod thus lites up Neon Lamp and indicates remaining voltage of batteries.

STOP

When STOP push button is depressed, previously engaged push button is instantly released. Simultaneously, power to the unit is cut off.

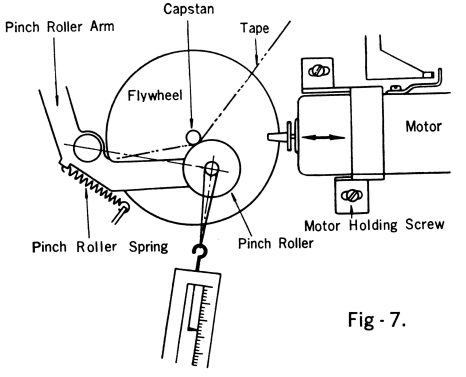

Fig - 7.

MECHANICAL ADJUSTMENTS

PINCH ROLLER TENSION

A. Shaft of Pinch Roller must be parallel to shaft of Capstan.
B. Pressure between Capstan and Pinch Roller can be checked as follows:
   1. Set recorder in PLAY mode.
   2. Hook a loop of thread at Pinch Roller shaft and Spring Scale and pull rightangle to the imaginal line between the pivot of Pinch Roller Arm and Pinch Roller Shaft until Pinch Roller is disengaged from Capstan.
   3. The proper pressure is about 6.3 - 12 ozs. (180 - 340 g)
   4. If pressure is not within above renge, adjust tension of Pinch Roller Spring.

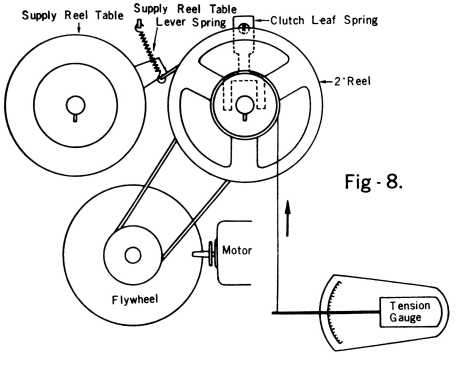

Fig - 8.

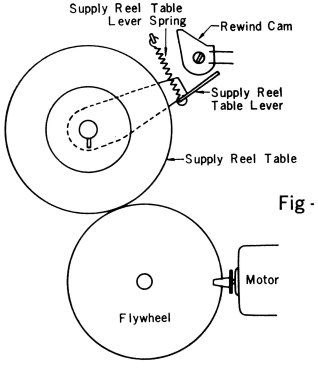

Fig - 9.