CAR RADIO SERVICE DATA

MODEL 02 RN 459 A

INTEGRATED CIRCUIT - PUSHBUTTON

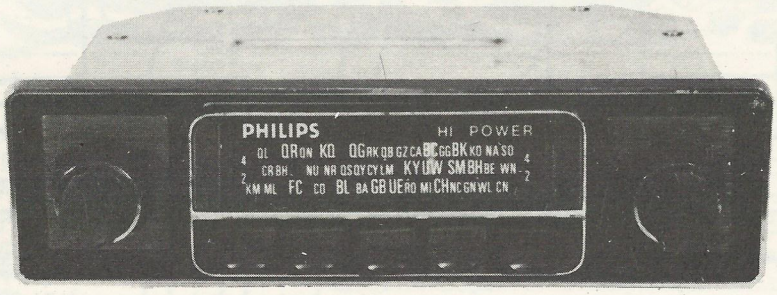

WARNING:
CONNECT POWER LEAD OF RECEIVER TO POSITIVE BATTERY TERMINAL ONLY. RECEIVER WILL BE DAMAGED IF CONNECTED TO INCORRECT POLARITY

NOTE:
ADJUST ANTENNA TRIMMER ON CONCLUSION OF INSTALLATION

PHILIPS CONSUMER PRODUCTS CAR RADIO SALES

1092 CENTRE ROAD CLAYTON VIC.,3168 544-2444

TOP VIEW

ANTENNA INPUT SOCKET
L1
CV1
TO PIN 2 (TUNER)
BLU TO VOL
WHT TO L9
BLACK TO L9
ORNG TO L9
RED TO L9
GREY TO VOL
C52B
OUTPUT TO SPEAKER 8 OHM
C52A
C52C
+13·0 V. D.C. POWER SUPPLY
L11
L12
L9 DRIVER TRANSFORMER
L14
C51
C53
C54
C48
C39
C35
C38
C36
C34
C33
C46
C44
C42
C41
C47
C43
R41
R38
R39
R37
R33
R34
R36
R35
R32
R31
R29
R28
R27
R26
R25
R24
R23
R22
R21
R20
R19
R18
R17
R16
R15
R14
R13
R12
R11
R9
R8
R7
R6
R5
R4
R3
R2
R1
C1
C2
C3
C4
C5
C6
C7
C8
C9
C10
C11
C12
C13
C14
C16
C17
C18
C19
C21
C22
C23
C24
C26
C27
C28
C29
C31
C32
C37
C55
D1
D2
D3
TR1
TR2
TR3
TR4
TR5
TR6
TR7
L1
L2
L3
L4
L5
L6
L7
L8
CV2
CV3
CV4
IC HA1313
TO ANTENNA
TUNER UNIT L2
SW
L13
LA1
LA2
GREY
BLUE
WHITE
BLACK
VOL
TONE
OUTPUT TRANSFORMER L10
YEL
BLU
BLCK
BRWN
ORNG
VILT
VILT TO L10
SWING CHASSIS
COLLECTOR CURRENT TEST LINK
TEST POINT "B"

UNDERSIDE VIEW

ALIGNMENT PROCEDURE

EQUIPMENT

Signal Generator : modulated at 400 Hz
Output Meter : 8 ohm impedance
Generator Series Capacitor : 100 nF (for i.f. alignment)
I.F. Attenuator : clip-on type - Part No. 4121-044-01
Dummy Antenna : 100 pF - Part No. 4121-041-01
Alignment Tool : flat metal blade type - Part No. 4121-001-01

CONDITIONS

Receiver : top lid removed
Volume Control : fully clockwise
Tone Control : fully clockwise
Output Meter : connected to receiver output socket (speaker disconnected).
Output Level : 50 mW
Supply Voltage : maintained at 14.0V d.c.
Polarity : Negative to receiver chassis. Positive to receiver power lead.
Signal Generator Output : kept to minimum necessary

TRANSFORMER ALIGNMENT

1. Set signal generator to 455 kHz, modulated at 400 Hz, 30%.
2. Connect active signal generator lead through 100 nF capacitor to Test point A on tuner unit; connect return lead to receiver chassis.
3. By adjusting the MANUAL TUNING control, tune receiver to a point of no interference near 1600 kHz (i.e. at high-frequency end of dial).
4. With output meter on 50 mW range and 8 ohm load, adjust cores of first, second, third and fourth i.f. transformers, in turn, for maximum output. Repeat i.f. core adjustment (in same order) until no further increase in output is obtainable.

BROADCAST ALIGNMENT

1. Connect dummy antenna to antenna input socket.
2. Connect i.f. attenuator between top end of R17 and receiver chassis.
3. Set output meter to 50 mW range, 8 ohm impedance, and connect to receiver output socket (speaker disconnected).

	SIGNAL GENERATOR FREQUENCY	MANUAL TUNING CONTROL	PROCEDURE
4	520 kHz	Low-frequency end stop	Adjust oscillator transformer core for maximum output.
5	1650 kHz	High-frequency end stop	Adjust oscillator trimmer CV4 for maximum output.
6			Repeat steps 4 and 5.
7	1400 kHz	Tune to signal generator.	Adjust antenna trimmer CV1 and r.f. trimmers CV2 & CV3 for maximum output.
8	600 kHz	Tune to signal generator.	Rock MANUAL TUNING control either side of signal generator frequency and, at the same time, adjust oscillator transformer core for peak sensitivity.
9	1400 kHz	Tune to signal generator	Rock MANUAL TUNING control either side of signal generator frequency, and at the same time, adjust oscillator trimmer, CV3, for peak sensitivity.
10			Repeat steps 7, 8, and 9.

CHECKING SERVICEABILITY OF I.C.

Integrated circuits are inherently reliable devices and can be exexpected to give long life in normal service. DO NOT, therefore, assume that the IC is responsible for a reported malfunction until you have carried out the following check ;

CAUTION. Great care must be taken to ensure that the pins of the I.C. are not shorted together or to frame during this check.

- Check current drawn by receiver. With serviceable lamps, reading should be typically 400 mA (with no signal input).
- Turn VOLUME control fully up. When wiper of VOLUME control is touched, corresponding crackles should be heard from speaker.
- Measure d.c. voltage on Pin 8 of I.C. This should be approximately 6 - 7 volts (or half the supply voltage).

If the above checks are satisfactory, I.C. is likely to be serviceable. If there is still doubt, check sensitivity by injecting 5.0 mV audio signal at wiper of VOLUME control. Power output in 8 ohm load should be approximately 50 milliwatts.

CHANGING FAULTY I.C.

- Apply a soldering iron to each pin of the I.C. in turn, removing as much solder as possible. Carefully note connections and orientation of I.C.
- Withdraw the I.C.
- Fit new I.C., ensuring orientation is correct. Solder connections as before, applying heat for minimum time necessary to obtain well-soldered joints.

NOTE : WARNING

The battery lead of this receiver must be connected only to the POSITIVE terminal of a battery.
Connection to incorrect polarity will damage the receiver.
Connect receiver output socket only to 8 ohm load.

CONCISE DATA

Tuning Range : 525 kHz -1615 kHz.
Intermediate Frequency : 455 kHz.
Supply Voltage : 14.0 volts d.c.
Polarity : Negative-to-chassis (NOT reversible).
Current Consumption : Typically 400 mA (no signal input). including approx . 180 mA lamp current.
Output Load Impedance : 8 ohm.
Metal Screws : ISO Standard Metric.

COMPONENT PART LIST

CIRCUIT REF.	VALUE	TYPE	WORKING VOLTAGE	PART NUMBER	ORDER CODE
C1	10n	POLYESTER	100	2002 351 01103	4802 121 47158
C2	47n	POLYESTER	100	2002 351 01473	4802 121 47167
C3	470n	CERAMIC DISC	63	7500-027-01	4802 122 47049
C4	120p	POLYSTYRENE	125	2020 303 13121	4802 121 57018
C5	3.3n	POLYSTYRENE	50	2020 303 12332	4802 121 57019
C6	680p	POLYSTYRENE	125	2020 303 14681	4802 121 57021
C7	2.2n	POLYESTER	100	4009-002-20	4802 121 47151
C8	120p	POLYSTYRENE	125	2020 303 13121	4802 121 57018
C9	1n	POLYPROPLENE	160	2012 324 00002	4802 121 47195
C11	4.7n	POLYESTER	100	2002 351 01472	4802 121 47064
C12	220p	POLYSTYRENE	125	2020 303 13221	4802 121 57009
C13	47n	POLYESTER	100	2002 351 01473	4802 121 47167
C14	47n	CERAMIC DISC	63	2002 555 90002	4802 122 47005
C16	220n	CERAMIC DISC	63	2002 555 90004	4802 122 47051
C17	10uF	ELECTROLYTIC	25	2020 002 44109	4802 124 47028
C18	47n	POLYESTER	100	2002 351 01473	4802 121 47167
C19	47n	CERAMIC DISC	63	2002 555 90002	4802 122 47005
C21	220n	CERAMIC DISC	63	2002 555 90004	4802 122 47051
C22	220p	CERAMIC	100	2222 630 03221	4822 122 31173
C23	6.8p	CERAMIC	50	2020 550 88688	4802 122 47014
C24	47n	POLYESTER	100	2002 555 90002	4802 122 47005
C26	2.2n	POLYESTER	100	4009-002-20	4802 121 47151
C27	2.2n	POLYESTER	100	4009-002-20	4802 121 47151
C28	470n	CERAMIC	35	2022 019 00003	4802 124 17001
C29	22uF	ELECTROLYTIC	15	2022 019 00012	4802 124 17002
C31	120n	POLYESTER	100	2012 318 11007	4802 121 17009
C32	6.8n	POLYESTER	100	2002 351 01682	4802 121 47156
C33	100n	POLYESTER	100	2002 351 01104	4802 121 47134
C34	33n	POLYESTER	100	4009-019-26	4802 121 47165
C36	0.47uF	CERAMIC DISC	63	2002 557 08474	4802 122 47049
C37	47n	POLYESTER	100	2002 555 90002	4802 122 47005
C38	220p	CERAMIC	100	2222 630 03221	4822 122 31173
C39	100uF	ELECTROLYTIC	10	2020 002 42101	4802 124 47002
C41	100uF	ELECTROLYTIC	10	2020 002 42101	4802 124 47002
C42	560p	CERAMIC	100	2222 630 03561	5322 122 30115
C43	47p	CERAMIC	50	2020 550 91479	4802 122 47021
C44	47uF	ELECTROLYTIC	16	2020 002 43479	4802 124 47025
C46	1000uF	ELECTROLYTIC	16	2020 002 43102	4802 124 47051
C47	47n	POLYESTER	100	2002 351 01473	4802 121 47167
C48	47n	CERAMIC	63	2002 555 90002	4802 122 47005
C51	47n	CERAMIC	63	2002 555 90002	4802 122 47005
C52	2.2n	FEED THROUGH	50	2020 559 90004	4802 122 77014
C53	100n	POLYCARB	250	2222 342 45104	4822 121 41161
C54	100n	POLYCARB	250	2222 342 45104	4822 121 41161
CV1	10/100p	TRIMMER	100	2020 802 00002	4802 125 57008
CV2	10/100p	TRIMMER	100	2020 802 00002	4802 125 57008
CV3	10/100p	TRIMMER	100	3102 308 51191	4802 125 57009
CV4	5.5/65p	TRIMMER	100	2222 808 01001	4822 125 50017
D1	BA317	DIODE		9332 084 00112	4802 130 37049
D2	BA317	DIODE		9332 084 00112	4802 130 37049
D3	BZX79/10	DIODE ZENER		9331 177 90112	5322 130 30774
TR1	BF495	TRANSISTOR		9331 987 80112	4822 130 40947
TR2	BF494	TRANSISTOR		9331 987 70742	5322 130 44195
TR3	BF494	TRANSISTOR		9331 987 70742	5322 130 44195
TR4	BF494	TRANSISTOR		9331 987 70742	5322 130 44195
TR5	BC548	TRANSISTOR		9331 976 40112	4822 130 40938
TR6	BD435	TRANSISTOR		9331 345 20112	4822 130 47101
TR7	BD435	TRANSISTOR		9331 345 20112	4822 130 47101
IC.1	HA1313	INT. CIRCUIT		9332 345 30112	4802 209 87029
L1		CHOKE 6.8uH		4048-032-01	4802 157 57025
L2		PERMEABILITY TUNER		3102 308 51161	4802 210 17055
L3		IF. TRANSFORMER		3102 308 30152	4802 153 17107
L4		OSCILLATOR COIL		3102 308 22042	4802 156 27071
L5		IF. TRANSFORMER		3102 308 30152	4802 153 17107
L6		IF. TRANSFORMER		3102 308 30162	4802 153 17108
L7		IF. TRANSFORMER		3102 308 30172	4802 153 17109
L8		COIL 4 uH		4036-126-01	4802 158 17016
L9		DRIVER TRANSFORMER		3102 308 30271	4802 142 47022
L10		TRANSFORMER OUTPUT		3102 308 36011	4802 140 67025
L11		CHOKE		4048-043-02	4802 158 17026
L12		CHOKE		4048-043-02	4802 158 17026
L13		CHOKE 9.2uH		3102 308 30141	4802 157 57043
L14		CHOKE FERRITE		4048-033-01	4802 157 57026
		POINTER		7173-100-01	4802 450 87039
		DIAL (KC)		3102 305 00971	4802 331 17006
		DIAL (ALL STATES)		3102 305 00981	4802 331 17007
		LAMPS (2)		2402 533 00014	4802 134 47036
		DIAL BACKGROUND		3102 304 32021	4802 466 77018
		ESCUTCHEON		3102 304 21051	4802 459 57007
		ESCUTCHEON TRIM		3102 304 21281	4802 459 27091
		INSERT (2)		3102 305 13491	4802 413 77061
		CONTROL KNOB ASSY (REAR)		3102 307 52871	4802 413 97112
		CONTROL KNOB ASSY (FRONT)		7124-424-01	4802 413 37064
		LEAD ASSY BATTERY		3102 308 55011	4802 256 47001
		FUSE 3 AMP.		2402 085 00051	4802 253 47006
		POWER LEAD ASSY. EXT.		4077-175-69	4802 321 27036
		ANTENNA TRIMMER KNOB		3102 304 20771	4802 413 37105
		UPPER LID		3102 301 30243	4802 464 77107
		LID BASE		3102 301 30191	4802 464 77108
		SPEAKER LEAD ASSY.		3102 308 55022	4802 321 27095
		SPEAKER LEAD EXT.		3102 308 55032	4802 321 27018

NOTE :- ORDER CODE MUST BE QUOTED WHEN ORDERING SPARE PARTS.

REPLACEMENT OF OUTPUT TRANSISTORS.

THE PUSH - PULL OUTPUT TRANSISTORS ARE A MATCHED PAIR AND MUST BE REPLACED AS A PAIR, NOT AS SEPARATE ITEMS.

MEASUREMENT AND ADJUSTMENT OF OUTPUT TRANSISTOR COLLECTOR CURRENT.

EQUIPMENT : CURRENT METER 0-1 AMP. DC. SUPPLY SOURCE 14.0 VOLT DC.

CONDITIONS : CONNECT SUPPLY LEADS NEGATIVE TO CHASSIS.
CONNECT 8 OHM SPEAKER TO RECEIVER OUTPUT SOCKET.
CONNECT CURRENT METER TO CONNECTION ADJACENT TO OUTPUT TRANSISTOR. NO SIGNAL IS APPLIED TO ANTENNA INPUT SOCKET.

- SWITCH RECEIVER ON AND SET VOLUME CONTROL TO MINIMUM.
- ALLOW 2 MINUTES FOR SET TO STABILIZE.
- CHECK THAT COLLECTOR CURRENT IS BETWEEN 100-200mA.
- IF CURRENT IS OUTSIDE THIS RANGE IT MAY BE CORRECTED BY ADDING OR REMOVING 'R44' AS REQUIRED.

ANTENNA TRIMMER ADJUSTMENT.

THE ANTENNA TRIMMER MUST BE RE-ADJUSTED AT CONCLUSION OF INSTALLATION. FULLY EXTEND ANTENNA. RETRACT INNER SECTIONS UNTIL ANTENNA IS APPROXIMATELY AT HALF EXTENDED HEIGHT. TUNE RECEIVER TO WEAK STATION NEAR 1000 KHz (CENTRE OF DIAL). ADJUST KNOB AT REAR LEFT CORNER OF RECEIVER FOR MAXIMUM OUTPUT.

NOTE :- IF FULLY RETRACTABLE ANTENNA IS USED, PULL LARGE OUTER ROD UP AGAINST STOP IN ANTENNA BASE.

NOTE :- R44, 22 OR 47 OHMS ADJUST ON TEST TO 350 mA MAX. (NO DIAL LAMPS).

ADD R10, 470K TO IF. TRANSFORMER L3 BETWEEN PINS 1 & 3. (UNDERNEATH PCB).

RESISTORS

ALL RESISTORS ARE ·5 WATT 5%
CARBON COMPOSITION TYPES.

3102 305 31541

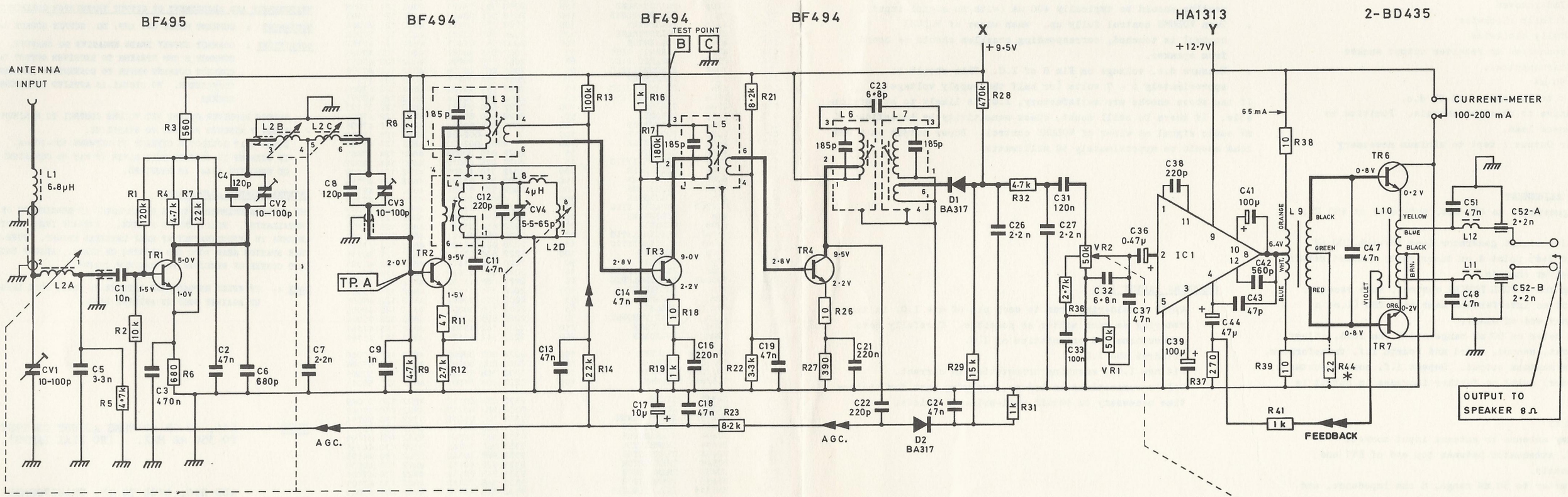
BF495
BF494
BF494
BF494
HA1313
2-BD435
TEST POINT
B
C
X
Y
+9·5V
+12·7V
ANTENNA INPUT
L1 6·8μH
L2A
L2B
L2C
L2D
L3
L4
L5
L6
L7
L8 4μH
CV1 10-100p
CV2 10-100p
CV3 10-100p
CV4 5·5-65p
TR1
TR2
TR3
TR4
TR5
TR6
TR7
TP. A
AGC.
D1 BA317
D2 BA317
D3 BZX79C10
IC1
VR1
VR2
FEEDBACK
CURRENT-METER 100-200 mA
65 mA
OUTPUT TO SPEAKER 8Ω
CURRENT CONSUMPTION 500 mA (INCLUDING LAMPS) NO SIGNAL INPUT
FS1 3 AMP.
13·0 VOLTS DC. INPUT
NOTE * R44 (UNDER SIDE P.C.B)
PERMEABILITY TUNER 525-1615 kHz (APPROXIMATELY)
8 7 6 5 4 3 2 1
OSC. RF2. RF1. ANT.
REAR VIEW
I.F. & OSCILLATOR TRANSFORMERS
UNDERSIDE VIEW
DIODES BZX79C10
BA317
RED
TRANSISTOR BF494 BF495 BC548
UNDERSIDE VIEW
2-BD435
FRONT VIEW
INTEGRATED CIRCUIT HA1313
TOP VIEW